ANEXO II

ESFUERZOS EVENTOS CRÍTICOS

Barra	Station	Evento	P	V2	V3	T	M2	M3
Text	m	Text	KN	KN	KN	KN-m	KN-m	KN-m
1	0	Extremo 1A	1.433	-12.835	1.586	2.5669	0.99	-3.0196
1	0.5	Extremo 1A	1.433	-4.278	1.586	2.5669	0.1971	1.2586
1	1	Extremo 1A	1.433	4.278	1.586	2.5669	-0.5959	1.2587
1	0	Extremo 2A	1.433	-12.835	1.586	2.5669	0.99	-3.0196
1	0.5	Extremo 2A	1.433	-4.278	1.586	2.5669	0.1971	1.2586
1	1	Extremo 2A	1.433	4.278	1.586	2.5669	-0.5959	1.2587
2	0	Extremo 1A	3.269	-10.935	1.928	1.4449	1.0786	-0.662
2	0.5	Extremo 1A	3.269	-2.378	1.928	1.4449	0.1145	2.6662
2	1	Extremo 1A	3.269	6.178	1.928	1.4449	-0.8496	1.7163
2	0	Extremo 2A	3.269	-10.935	1.928	1.4449	1.0786	-0.662
2	0.5	Extremo 2A	3.269	-2.378	1.928	1.4449	0.1145	2.6662
2	1	Extremo 2A	3.269	6.178	1.928	1.4449	-0.8496	1.7163
3	0	Extremo 1A	5.301	-10.541	1.813	0.46	0.9598	1.2195
3	0.5	Extremo 1A	5.301	-1.985	1.813	0.46	0.0534	4.3511
3	1	Extremo 1A	5.301	6.571	1.813	0.46	-0.8531	3.2046
3	0	Extremo 2A	5.301	-10.541	1.813	0.46	0.9598	1.2195
3	0.5	Extremo 2A	5.301	-1.985	1.813	0.46	0.0534	4.3511
3	1	Extremo 2A	5.301	6.571	1.813	0.46	-0.8531	3.2046
4	0	Extremo 1A	7.217	-9.502	1.53	0.1462	0.7811	3.0077
4	0.5	Extremo 1A	7.217	-0.946	1.53	0.1462	0.0163	5.6196
4	1	Extremo 1A	7.217	7.611	1.53	0.1462	-0.7485	3.9534
4	0	Extremo 2A	7.217	-9.502	1.53	0.1462	0.7811	3.0077
4	0.5	Extremo 2A	7.217	-0.946	1.53	0.1462	0.0163	5.6196
4	1	Extremo 2A	7.217	7.611	1.53	0.1462	-0.7485	3.9534
5	0	Extremo 1A	8.853	-7.906	1.228	0.1372	0.6068	3.8557
5	0.5	Extremo 1A	8.853	0.65	1.228	0.1372	-0.0074	5.6695
5	1	Extremo 1A	8.853	9.207	1.228	0.1372	-0.6216	3.2053
5	0	Extremo 2A	8.853	-7.906	1.228	0.1372	0.6068	3.8557
5	0.5	Extremo 2A	8.853	0.65	1.228	0.1372	-0.0074	5.6695
5	1	Extremo 2A	8.853	9.207	1.228	0.1372	-0.6216	3.2053
6	0	Extremo 1A	10.175	-6.126	0.962	0.282	0.4557	3.3058
6	0.5	Extremo 1A	10.175	2.43	0.962	0.282	-0.0253	4.2298
6	1	Extremo 1A	10.175	10.986	0.962	0.282	-0.5064	0.8756
6	0	Extremo 2A	10.175	-6.126	0.962	0.282	0.4557	3.3058
6	0.5	Extremo 2A	10.175	2.43	0.962	0.282	-0.0253	4.2298
6	1	Extremo 2A	10.175	10.986	0.962	0.282	-0.5064	0.8756
7	0	Extremo 1A	11.211	-4.403	0.742	0.6661	0.3312	1.0981
7	0.5	Extremo 1A	11.211	4.153	0.742	0.6661	-0.04	1.1608
7	1	Extremo 1A	11.211	12.709	0.742	0.6661	-0.4112	-3.0547
7	0	Extremo 2A	11.211	-4.403	0.742	0.6661	0.3312	1.0981
7	0.5	Extremo 2A	11.211	4.153	0.742	0.6661	-0.04	1.1608
7	1	Extremo 2A	11.211	12.709	0.742	0.6661	-0.4112	-3.0547
8	0	Extremo 1A	12.007	-3.264	0.567	1.3219	0.2314	-3.1432
8	0.5	Extremo 1A	12.007	5.292	0.567	1.3219	-0.0522	-3.6504
8	1	Extremo 1A	12.007	13.849	0.567	1.3219	-0.3358	-8.4356
8	0	Extremo 2A	12.007	-3.264	0.567	1.3219	0.2314	-3.1432
8	0.5	Extremo 2A	12.007	5.292	0.567	1.3219	-0.0522	-3.6503
8	1	Extremo 2A	12.007	13.849	0.567	1.3219	-0.3358	-8.4356
9	0	Extremo 1A	12.613	-4.049	0.431	1.7648	0.1533	-9.5684
9	0.5	Extremo 1A	12.613	4.507	0.431	1.7648	-0.062	-9.6829
9	1	Extremo 1A	12.613	13.063	0.431	1.7648	-0.2773	-14.0755
9	0	Extremo 2A	12.613	-4.049	0.431	1.7648	0.1533	-9.5684
9	0.5	Extremo 2A	12.613	4.507	0.431	1.7648	-0.062	-9.6829
9	1	Extremo 2A	12.613	13.063	0.431	1.7648	-0.2773	-14.0755
10	0	Extremo 1A	13.071	-7.886	0.325	0.9607	0.093	-16.2
10	0.5	Extremo 1A	13.071	0.67	0.325	0.9607	-0.0697	-14.3958
10	1	Extremo 1A	13.071	9.226	0.325	0.9607	-0.2324	-16.8698
10	0	Extremo 2A	13.071	-7.886	0.325	0.9607	0.093	-16.2
10	0.5	Extremo 2A	13.071	0.67	0.325	0.9607	-0.0697	-14.3958
10	1	Extremo 2A	13.071	9.226	0.325	0.9607	-0.2324	-16.8698
11	0	Extremo 1A	13.417	-11.38	0.245	-0.4887	0.0469	-17.2678
11	0.5	Extremo 1A	13.417	-2.824	0.245	-0.4887	-0.0757	-13.7168
11	1	Extremo 1A	13.417	5.732	0.245	-0.4887	-0.1984	-14.4439
11	0	Extremo 2A	13.417	-11.38	0.245	-0.4887	0.0469	-17.2678
11	0.5	Extremo 2A	13.417	-2.824	0.245	-0.4887	-0.0757	-13.7168
11	1	Extremo 2A	13.417	5.732	0.245	-0.4887	-0.1984	-14.4439
201	0	Extremo 1A	13.677	-15.224	0.185	-1.2909	0.012	-13.1182
201	0.5	Extremo 1A	13.677	-6.667	0.185	-1.2909	-0.0803	-7.6454
201	1	Extremo 1A	13.677	1.889	0.185	-1.2909	-0.1727	-6.4508
201	0	Extremo 2A	13.677	-15.224	0.185	-1.2909	0.012	-13.1182
201	0.5	Extremo 2A	13.677	-6.667	0.185	-1.2909	-0.0803	-7.6454
201	1	Extremo 2A	13.677	1.889	0.185	-1.2909	-0.1727	-6.4508
202	0	Extremo 1A	13.872	-16.024	0.139	-0.8475	-0.0143	-6.1246
202	0.5	Extremo 1A	13.872	-7.467	0.139	-0.8475	-0.0838	-0.2518
202	1	Extremo 1A	13.872	1.089	0.139	-0.8475	-0.1533	1.3429
202	0	Extremo 2A	13.872	-16.024	0.139	-0.8475	-0.0143	-6.1246
202	0.5	Extremo 2A	13.872	-7.467	0.139	-0.8475	-0.0838	-0.2518
202	1	Extremo 2A	13.872	1.089	0.139	-0.8475	-0.1533	1.3429
203	0	Extremo 1A	14.019	-14.913	0.105	-0.2007	-0.0342	0.6137
203	0.5	Extremo 1A	14.019	-6.356	0.105	-0.2007	-0.0864	5.931
203	1	Extremo 1A	14.019	2.2	0.105	-0.2007	-0.1387	6.9701
203	0	Extremo 2A	14.019	-14.913	0.105	-0.2007	-0.0342	0.6137
203	0.5	Extremo 2A	14.019	-6.356	0.105	-0.2007	-0.0864	5.931
203	1	Extremo 2A	14.019	2.2	0.105	-0.2007	-0.1387	6.9701
204	0	Extremo 1A	14.129	-13.236	0.079	0.1477	-0.0491	5.9257
204	0.5	Extremo 1A	14.129	-4.68	0.079	0.1477	-0.0884	10.4048
204	1	Extremo 1A	14.129	3.876	0.079	0.1477	-0.1278	10.6057
204	0	Extremo 2A	14.129	-13.236	0.079	0.1477	-0.0491	5.9257
204	0.5	Extremo 2A	14.129	-4.68	0.079	0.1477	-0.0884	10.4048
204	1	Extremo 2A	14.129	3.876	0.079	0.1477	-0.1278	10.6057
205	0	Extremo 1A	14.212	-11.494	0.059	0.2134	-0.0602	9.7198
205	0.5	Extremo 1A	14.212	-2.938	0.059	0.2134	-0.0899	13.3278
205	1	Extremo 1A	14.212	5.618	0.059	0.2134	-0.1195	12.6578
205	0	Extremo 2A	14.212	-11.494	0.059	0.2134	-0.0602	9.7198
205	0.5	Extremo 2A	14.212	-2.938	0.059	0.2134	-0.0899	13.3278
205	1	Extremo 2A	14.212	5.618	0.059	0.2134	-0.1195	12.6578
206	0	Extremo 1A	14.275	-9.779	0.045	0.1247	-0.0686	12.1202
206	0.5	Extremo 1A	14.275	-1.222	0.045	0.1247	-0.091	14.8705
206	1	Extremo 1A	14.275	7.334	0.045	0.1247	-0.1133	13.3427
206	0	Extremo 2A	14.275	-9.779	0.045	0.1247	-0.0686	12.1202
206	0.5	Extremo 2A	14.275	-1.222	0.045	0.1247	-0.091	14.8705
206	1	Extremo 2A	14.275	7.334	0.045	0.1247	-0.1133	13.3427
207	0	Extremo 1A	14.322	-8.081	0.034	-0.0226	-0.0749	13.212
207	0.5	Extremo 1A	14.322	0.475	0.034	-0.0226	-0.0918	15.1137
207	1	Extremo 1A	14.322	9.031	0.034	-0.0226	-0.1087	12.7372
207	0	Extremo 2A	14.322	-8.081	0.034	-0.0226	-0.0749	13.212
207	0.5	Extremo 2A	14.322	0.475	0.034	-0.0226	-0.0918	15.1137
207	1	Extremo 2A	14.322	9.031	0.034	-0.0226	-0.1087	12.7372
208	0	Extremo 1A	14.357	-6.383	0.026	-0.1644	-0.0797	13.0246
208	0.5	Extremo 1A	14.357	2.174	0.026	-0.1644	-0.0924	14.0768
208	1	Extremo 1A	14.357	10.73	0.026	-0.1644	-0.1052	10.8509
208	0	Extremo 2A	14.357	-6.383	0.026	-0.1644	-0.0797	13.0246
208	0.5	Extremo 2A	14.357	2.174	0.026	-0.1644	-0.0924	14.0768
208	1	Extremo 2A	14.357	10.73	0.026	-0.1644	-0.1052	10.8509
209	0	Extremo 1A	14.384	-4.661	0.019	-0.2326	-0.0833	11.5408
209	0.5	Extremo 1A	14.384	3.895	0.019	-0.2326	-0.0929	11.7324
209	1	Extremo 1A	14.384	12.451	0.019	-0.2326	-0.1026	7.646
209	0	Extremo 2A	14.384	-4.661	0.019	-0.2326	-0.0833	11.5408
209	0.5	Extremo 2A	14.384	3.895	0.019	-0.2326	-0.0929	11.7324
209	1	Extremo 2A	14.384	12.451	0.019	-0.2326	-0.1026	7.6459
210	0	Extremo 1A	14.405	-2.91	0.015	-0.1177	-0.0859	8.668
210	0.5	Extremo 1A	14.405	5.646	0.015	-0.1177	-0.0932	7.9838
210	1	Extremo 1A	14.405	14.203	0.015	-0.1177	-0.1006	3.0215
210	0	Extremo 2A	14.405	-2.91	0.015	-0.1177	-0.0859	8.668
210	0.5	Extremo 2A	14.405	5.646	0.015	-0.1177	-0.0932	7.9838
210	1	Extremo 2A	14.405	14.203	0.015	-0.1177	-0.1006	3.0215
211	0	Extremo 1A	14.42	-1.236	0.011	0.3292	-0.088	4.1521
211	0.5	Extremo 1A	14.42	7.32	0.011	0.3292	-0.0935	2.631
211	1	Extremo 1A	14.42	15.876	0.011	0.3292	-0.0991	-3.1682
211	0	Extremo 2A	14.42	-1.236	0.011	0.3292	-0.088	4.1521
211	0.5	Extremo 2A	14.42	7.32	0.011	0.3292	-0.0935	2.631
211	1	Extremo 2A	14.42	15.876	0.011	0.3292	-0.0991	-3.1682
212	0	Extremo 1A	14.432	-0.223	0.00843	1.1262	-0.0895	-2.4842
212	0.5	Extremo 1A	14.432	8.333	0.00843	1.1262	-0.0937	-4.5117
212	1	Extremo 1A	14.432	16.889	0.00843	1.1262	-0.0979	-10.8173
212	0	Extremo 2A	14.432	-0.223	0.00843	1.1262	-0.0895	-2.4842
212	0.5	Extremo 2A	14.432	8.333	0.00843	1.1262	-0.0937	-4.5117
212	1	Extremo 2A	14.432	16.889	0.00843	1.1262	-0.0979	-10.8173
213	0	Extremo 1A	14.441	-1.439	0.00641	1.6895	-0.0906	-11.4458
213	0.5	Extremo 1A	14.441	7.118	0.00641	1.6895	-0.0939	-12.8656
213	1	Extremo 1A	14.441	15.674	0.00641	1.6895	-0.0971	-18.5635
213	0	Extremo 2A	14.441	-1.439	0.00641	1.6895	-0.0906	-11.4458

213	0.5	Extremo 2A	14.441	7.118	0.00641	1.6895	-0.0939	-12.8656
213	1	Extremo 2A	14.441	15.674	0.00641	1.6895	-0.0971	-18.5635
214	0	Extremo 1A	14.448	-6.201	0.00488	0.8054	-0.0915	-20.4445
214	0.5	Extremo 1A	14.448	2.356	0.00488	0.8054	-0.094	-19.4833
214	1	Extremo 1A	14.448	10.912	0.00488	0.8054	-0.0964	-22.8002
214	0	Extremo 2A	14.448	-6.201	0.00488	0.8054	-0.0915	-20.4445
214	0.5	Extremo 2A	14.448	2.356	0.00488	0.8054	-0.094	-19.4833
214	1	Extremo 2A	14.448	10.912	0.00488	0.8054	-0.0964	-22.8002
215	0	Extremo 1A	14.453	-10.559	0.00372	-0.8299	-0.0922	-22.7683
215	0.5	Extremo 1A	14.453	-2.003	0.00372	-0.8299	-0.094	-19.6278
215	1	Extremo 1A	14.453	6.553	0.00372	-0.8299	-0.0959	-20.7655
215	0	Extremo 2A	14.453	-10.559	0.00372	-0.8299	-0.0922	-22.7683
215	0.5	Extremo 2A	14.453	-2.003	0.00372	-0.8299	-0.094	-19.6279
215	1	Extremo 2A	14.453	6.553	0.00372	-0.8299	-0.0959	-20.7655
216	0	Extremo 1A	14.457	-15.321	0.00284	-1.714	-0.0927	-18.8207
216	0.5	Extremo 1A	14.457	-6.765	0.00284	-1.714	-0.0941	-13.2993
216	1	Extremo 1A	14.457	1.791	0.00284	-1.714	-0.0955	-12.0559
216	0	Extremo 2A	14.457	-15.321	0.00284	-1.714	-0.0927	-18.8207
216	0.5	Extremo 2A	14.457	-6.765	0.00284	-1.714	-0.0941	-13.2993
216	1	Extremo 2A	14.457	1.791	0.00284	-1.714	-0.0955	-12.0559
217	0	Extremo 1A	14.46	-16.536	0.00217	-1.1507	-0.0931	-11.3636
217	0.5	Extremo 1A	14.46	-7.98	0.00217	-1.1507	-0.0942	-5.2345
217	1	Extremo 1A	14.46	0.576	0.00217	-1.1507	-0.0952	-3.3835
217	0	Extremo 2A	14.46	-16.536	0.00217	-1.1507	-0.0931	-11.3636
217	0.5	Extremo 2A	14.46	-7.98	0.00217	-1.1507	-0.0942	-5.2345
217	1	Extremo 2A	14.46	0.576	0.00217	-1.1507	-0.0952	-3.3835
218	0	Extremo 1A	14.462	-15.523	0.00166	-0.3536	-0.0934	-4.0036
218	0.5	Extremo 1A	14.462	-6.967	0.00166	-0.3536	-0.0942	1.619
218	1	Extremo 1A	14.462	1.589	0.00166	-0.3536	-0.095	2.9635
218	0	Extremo 2A	14.462	-15.523	0.00166	-0.3536	-0.0934	-4.0036
218	0.5	Extremo 2A	14.462	-6.967	0.00166	-0.3536	-0.0942	1.619
218	1	Extremo 2A	14.462	1.589	0.00166	-0.3536	-0.095	2.9635
219	0	Extremo 1A	14.464	-13.849	0.00127	0.0934	-0.0936	1.8968
219	0.5	Extremo 1A	14.464	-5.293	0.00127	0.0934	-0.0942	6.6824
219	1	Extremo 1A	14.464	3.263	0.00127	0.0934	-0.0949	7.1899
219	0	Extremo 2A	14.464	-13.849	0.00127	0.0934	-0.0936	1.8968
219	0.5	Extremo 2A	14.464	-5.293	0.00127	0.0934	-0.0942	6.6824
219	1	Extremo 2A	14.464	3.263	0.00127	0.0934	-0.0949	7.1899
220	0	Extremo 1A	14.465	-12.097	0.00097	0.2089	-0.0937	6.2317
220	0.5	Extremo 1A	14.465	-3.541	0.00097	0.2089	-0.0942	10.1413
220	1	Extremo 1A	14.465	5.015	0.00097	0.2089	-0.0947	9.7727
220	0	Extremo 2A	14.465	-12.097	0.00097	0.2089	-0.0937	6.2317
220	0.5	Extremo 2A	14.465	-3.541	0.00097	0.2089	-0.0942	10.1413
220	1	Extremo 2A	14.465	5.015	0.00097	0.2089	-0.0947	9.7727
221	0	Extremo 1A	14.466	-10.376	0.00075	0.1422	-0.0939	9.1465
221	0.5	Extremo 1A	14.466	-1.819	0.00075	0.1422	-0.0943	12.1952
221	1	Extremo 1A	14.466	6.737	0.00075	0.1422	-0.0946	10.9658
221	0	Extremo 2A	14.466	-10.376	0.00075	0.1422	-0.0939	9.1465
221	0.5	Extremo 2A	14.466	-1.819	0.00075	0.1422	-0.0943	12.1953
221	1	Extremo 2A	14.466	6.737	0.00075	0.1422	-0.0946	10.9659
222	0	Extremo 1A	14.467	-8.676	0.00057	0.0038	-0.094	10.7414
222	0.5	Extremo 1A	14.467	-0.119	0.00057	0.0038	-0.0943	12.9402
222	1	Extremo 1A	14.467	8.437	0.00057	0.0038	-0.0946	10.8608
222	0	Extremo 2A	14.467	-8.676	0.00057	0.0038	-0.094	10.7414
222	0.5	Extremo 2A	14.467	-0.119	0.00057	0.0038	-0.0943	12.9402
222	1	Extremo 2A	14.467	8.437	0.00057	0.0038	-0.0946	10.8609
223	0	Extremo 1A	14.468	-6.976	0.00044	-0.1352	-0.0941	11.0525
223	0.5	Extremo 1A	14.468	1.58	0.00044	-0.1352	-0.0943	12.4016
223	1	Extremo 1A	14.468	10.136	0.00044	-0.1352	-0.0945	9.4726
223	0	Extremo 2A	14.468	-6.976	0.00044	-0.1352	-0.0941	11.0526
223	0.5	Extremo 2A	14.468	1.58	0.00044	-0.1352	-0.0943	12.4017
223	1	Extremo 2A	14.468	10.136	0.00044	-0.1352	-0.0945	9.4727
224	0	Extremo 1A	14.468	-5.257	0.00034	-0.2047	-0.0941	10.0659
224	0.5	Extremo 1A	14.468	3.3	0.00034	-0.2047	-0.0943	10.5551
224	1	Extremo 1A	14.468	11.856	0.00034	-0.2047	-0.0945	6.7662
224	0	Extremo 2A	14.468	-5.257	0.00034	-0.2047	-0.0941	10.0659
224	0.5	Extremo 2A	14.468	3.3	0.00034	-0.2047	-0.0943	10.5552
224	1	Extremo 2A	14.468	11.856	0.00034	-0.2047	-0.0945	6.7663
225	0	Extremo 1A	14.468	-3.508	0.00026	-0.0969	-0.0942	7.6924
225	0.5	Extremo 1A	14.468	5.048	0.00026	-0.0969	-0.0943	7.3075
225	1	Extremo 1A	14.468	13.604	0.00026	-0.0969	-0.0944	2.6444
225	0	Extremo 2A	14.468	-3.508	0.00026	-0.0969	-0.0942	7.6925
225	0.5	Extremo 2A	14.468	5.048	0.00026	-0.0969	-0.0943	7.3075
225	1	Extremo 2A	14.468	13.604	0.00026	-0.0969	-0.0944	2.6444
226	0	Extremo 1A	14.469	-1.837	0.0002	0.3334	-0.0942	3.6853
226	0.5	Extremo 1A	14.469	6.72	0.0002	0.3334	-0.0943	2.4645
226	1	Extremo 1A	14.469	15.276	0.0002	0.3334	-0.0944	-3.0344
226	0	Extremo 2A	14.469	-1.837	0.0002	0.3334	-0.0942	3.6854
226	0.5	Extremo 2A	14.469	6.72	0.0002	0.3334	-0.0943	2.4646
226	1	Extremo 2A	14.469	15.276	0.0002	0.3334	-0.0944	-3.0344
227	0	Extremo 1A	14.469	-0.807	0.00016	1.1043	-0.0942	-2.4186
227	0.5	Extremo 1A	14.469	7.749	0.00016	1.1043	-0.0943	-4.1541
227	1	Extremo 1A	14.469	16.306	0.00016	1.1043	-0.0944	-10.1678
227	0	Extremo 2A	14.469	-0.807	0.00016	1.1043	-0.0942	-2.4185
227	0.5	Extremo 2A	14.469	7.749	0.00016	1.1043	-0.0943	-4.1541
227	1	Extremo 2A	14.469	16.306	0.00016	1.1043	-0.0944	-10.1677
228	0	Extremo 1A	14.469	-1.939	0.00012	1.6497	-0.0942	-10.8186
228	0.5	Extremo 1A	14.469	6.617	0.00012	1.6497	-0.0943	-11.9882
228	1	Extremo 1A	14.469	15.174	0.00012	1.6497	-0.0944	-17.4359
228	0	Extremo 2A	14.469	-1.939	0.00012	1.6497	-0.0942	-10.8185
228	0.5	Extremo 2A	14.469	6.617	0.00012	1.6497	-0.0943	-11.9881
228	1	Extremo 2A	14.469	15.174	0.00012	1.6497	-0.0944	-17.4358
229	0	Extremo 1A	14.469	-6.51	9.3E-05	0.7933	-0.0943	-19.2972
229	0.5	Extremo 1A	14.469	2.047	9.3E-05	0.7933	-0.0943	-18.1814
229	1	Extremo 1A	14.469	10.603	9.3E-05	0.7933	-0.0943	-21.3438
229	0	Extremo 2A	14.469	-6.51	9.3E-05	0.7933	-0.0943	-19.2971
229	0.5	Extremo 2A	14.469	2.047	9.3E-05	0.7933	-0.0943	-18.1813
229	1	Extremo 2A	14.469	10.603	9.3E-05	0.7933	-0.0943	-21.3437
230	0	Extremo 1A	14.469	-10.69	7.2E-05	-0.7909	-0.0943	-21.3493
230	0.5	Extremo 1A	14.469	-2.134	7.2E-05	-0.7909	-0.0943	-18.1434
230	1	Extremo 1A	14.469	6.422	7.2E-05	-0.7909	-0.0943	-19.2155
230	0	Extremo 2A	14.469	-10.69	7.2E-05	-0.7909	-0.0943	-21.3493
230	0.5	Extremo 2A	14.469	-2.134	7.2E-05	-0.7909	-0.0943	-18.1433
230	1	Extremo 2A	14.469	6.422	7.2E-05	-0.7909	-0.0943	-19.2154
231	0	Extremo 1A	14.469	-15.261	5.6E-05	-1.6472	-0.0943	-17.3653
231	0.5	Extremo 1A	14.469	-6.705	5.6E-05	-1.6472	-0.0943	-11.874
231	1	Extremo 1A	14.469	1.852	5.6E-05	-1.6472	-0.0943	-10.6608
231	0	Extremo 2A	14.469	-15.261	5.6E-05	-1.6472	-0.0943	-17.3652
231	0.5	Extremo 2A	14.469	-6.705	5.6E-05	-1.6472	-0.0943	-11.8739
231	1	Extremo 2A	14.469	1.852	5.6E-05	-1.6472	-0.0943	-10.6607
232	0	Extremo 1A	14.469	-16.393	4.3E-05	-1.1018	-0.0943	-10.0211
232	0.5	Extremo 1A	14.469	-7.837	4.3E-05	-1.1018	-0.0943	-3.9638
232	1	Extremo 1A	14.469	0.72	4.3E-05	-1.1018	-0.0943	-2.1846
232	0	Extremo 2A	14.469	-16.393	4.3E-05	-1.1018	-0.0943	-10.0211
232	0.5	Extremo 2A	14.469	-7.836	4.3E-05	-1.1018	-0.0943	-3.9638
232	1	Extremo 2A	14.469	0.72	4.3E-05	-1.1018	-0.0943	-2.1846
233	0	Extremo 1A	14.469	-15.363	3.3E-05	-0.3309	-0.0943	-2.8117
233	0.5	Extremo 1A	14.469	-6.807	3.3E-05	-0.3309	-0.0943	2.7309
233	1	Extremo 1A	14.469	1.749	3.3E-05	-0.3309	-0.0943	3.9954
233	0	Extremo 2A	14.469	-15.363	3.3E-05	-0.3309	-0.0943	-2.8117
233	0.5	Extremo 2A	14.469	-6.807	3.3E-05	-0.3309	-0.0943	2.7309
233	1	Extremo 2A	14.469	1.749	3.3E-05	-0.3309	-0.0943	3.9954
234	0	Extremo 1A	14.469	-13.692	2.6E-05	0.0995	-0.0943	2.9432
234	0.5	Extremo 1A	14.469	-5.135	2.6E-05	0.0995	-0.0943	7.65
234	1	Extremo 1A	14.469	3.421	2.6E-05	0.0995	-0.0943	8.0786
234	0	Extremo 2A	14.469	-13.692	2.6E-05	0.0995	-0.0943	2.9431
234	0.5	Extremo 2A	14.469	-5.135	2.6E-05	0.0995	-0.0943	7.6499
234	1	Extremo 2A	14.469	3.421	2.6E-05	0.0995	-0.0943	8.0786
235	0	Extremo 1A	14.47	-11.943	2E-05	0.2075	-0.0943	7.141
235	0.5	Extremo 1A	14.47	-3.387	2E-05	0.2075	-0.0943	10.9737
235	1	Extremo 1A	14.47	5.169	2E-05	0.2075	-0.0943	10.5283
235	0	Extremo 2A	14.47	-11.943	2E-05	0.2075	-0.0943	7.141
235	0.5	Extremo 2A	14.47	-3.387	2E-05	0.2075	-0.0943	10.9736
235	1	Extremo 2A	14.47	5.169	2E-05	0.2075	-0.0943	10.5282
236	0	Extremo 1A	14.47	-10.224	1.6E-05	0.1381	-0.0943	9.9233
236	0.5	Extremo 1A	14.47	-1.668	1.6E-05	0.1381	-0.0943	12.8962
236	1	Extremo 1A	14.47	6.889	1.6E-05	0.1381	-0.0943	11.591
236	0	Extremo 2A	14.47	-10.224	1.6E-05	0.1381	-0.0943	9.9232
236	0.5	Extremo 2A	14.47	-1.668	1.6E-05	0.1381	-0.0943	12.8961
236	1	Extremo 2A	14.47	6.889	1.6E-05	0.1381	-0.0943	11.5909
237	0	Extremo 1A	14.47	-8.525	1.2E-05	-0.0009	-0.0943	11.3873
237	0.5	Extremo 1A	14.47	0.031	1.2E-05	-0.0009	-0.0943	13.5108
237	1	Extremo 1A	14.47	8.587	1.2E-05	-0.0009	-0.0943	11.3562
237	0	Extremo 2A	14.47	-8.525	1.2E-05	-0.0009	-0.0943	11.3872

237	0.5	Extremo 2A	14.47	0.031	1.2E-05	-0.0009	-0.0943	13.5107
237	1	Extremo 2A	14.47	8.587	1.2E-05	-0.0009	-0.0943	11.356
238	0	Extremo 1A	14.47	-6.826	9.4E-06	-0.1398	-0.0943	11.5681
238	0.5	Extremo 1A	14.47	1.73	9.4E-06	-0.1398	-0.0943	12.8421
238	1	Extremo 1A	14.47	10.286	9.4E-06	-0.1398	-0.0943	9.8379
238	0	Extremo 2A	14.47	-6.826	9.4E-06	-0.1398	-0.0943	11.568
238	0.5	Extremo 2A	14.47	1.73	9.4E-06	-0.1398	-0.0943	12.8419
238	1	Extremo 2A	14.47	10.287	9.4E-06	-0.1398	-0.0943	9.8377
239	0	Extremo 1A	14.47	-5.106	7.3E-06	-0.2086	-0.0943	10.4512
239	0.5	Extremo 1A	14.47	3.45	7.3E-06	-0.2086	-0.0943	10.8651
239	1	Extremo 1A	14.47	12.007	7.3E-06	-0.2086	-0.0943	7.0009
239	0	Extremo 2A	14.47	-5.106	7.3E-06	-0.2086	-0.0943	10.451
239	0.5	Extremo 2A	14.47	3.45	7.3E-06	-0.2086	-0.0943	10.8649
239	1	Extremo 2A	14.47	12.007	7.3E-06	-0.2086	-0.0943	7.0007
240	0	Extremo 1A	14.47	-3.357	5.7E-06	-0.0988	-0.0943	7.9468
240	0.5	Extremo 1A	14.47	5.2	5.7E-06	-0.0988	-0.0943	7.4861
240	1	Extremo 1A	14.47	13.756	5.7E-06	-0.0988	-0.0943	2.7472
240	0	Extremo 2A	14.47	-3.357	5.7E-06	-0.0988	-0.0943	7.9466
240	0.5	Extremo 2A	14.47	5.2	5.7E-06	-0.0988	-0.0943	7.4859
240	1	Extremo 2A	14.47	13.756	5.7E-06	-0.0988	-0.0943	2.747
241	0	Extremo 1A	14.47	-1.684	4.4E-06	0.3357	-0.0943	3.8063
241	0.5	Extremo 1A	14.47	6.872	4.4E-06	0.3357	-0.0943	2.5095
241	1	Extremo 1A	14.47	15.428	4.4E-06	0.3357	-0.0943	-3.0655
241	0	Extremo 2A	14.47	-1.684	4.4E-06	0.3357	-0.0943	3.8061
241	0.5	Extremo 2A	14.47	6.872	4.4E-06	0.3357	-0.0943	2.5092
241	1	Extremo 2A	14.47	15.428	4.4E-06	0.3357	-0.0943	-3.0658
242	0	Extremo 1A	14.47	-0.659	3.4E-06	1.1131	-0.0943	-2.4368
242	0.5	Extremo 1A	14.47	7.897	3.4E-06	1.1131	-0.0943	-4.2464
242	1	Extremo 1A	14.47	16.454	3.4E-06	1.1131	-0.0943	-10.3341
242	0	Extremo 2A	14.47	-0.659	3.4E-06	1.1131	-0.0943	-2.437
242	0.5	Extremo 2A	14.47	7.897	3.4E-06	1.1131	-0.0943	-4.2467
242	1	Extremo 2A	14.47	16.454	3.4E-06	1.1131	-0.0943	-10.3344
243	0	Extremo 1A	14.47	-1.812	2.7E-06	1.6627	-0.0943	-10.9834
243	0.5	Extremo 1A	14.47	6.744	2.7E-06	1.6627	-0.0943	-12.2164
243	1	Extremo 1A	14.47	15.3	2.7E-06	1.6627	-0.0943	-17.7275
243	0	Extremo 2A	14.47	-1.812	2.7E-06	1.6627	-0.0943	-10.9836
243	0.5	Extremo 2A	14.47	6.744	2.7E-06	1.6627	-0.0943	-12.2167
243	1	Extremo 2A	14.47	15.3	2.7E-06	1.6627	-0.0943	-17.7278
244	0	Extremo 1A	14.47	-6.432	2.1E-06	0.7987	-0.0943	-19.5975
244	0.5	Extremo 1A	14.47	2.124	2.1E-06	0.7987	-0.0943	-18.5206
244	1	Extremo 1A	14.47	10.681	2.1E-06	0.7987	-0.0943	-21.7219
244	0	Extremo 2A	14.47	-6.432	2.1E-06	0.7987	-0.0943	-19.5978
244	0.5	Extremo 2A	14.47	2.124	2.1E-06	0.7987	-0.0943	-18.5209
244	1	Extremo 2A	14.47	10.681	2.1E-06	0.7987	-0.0943	-21.7222
245	0	Extremo 1A	14.47	-10.658	1.6E-06	-0.7992	-0.0943	-21.7206
245	0.5	Extremo 1A	14.47	-2.102	1.6E-06	-0.7992	-0.0943	-18.5307
245	1	Extremo 1A	14.47	6.455	1.6E-06	-0.7992	-0.0943	-19.619
245	0	Extremo 2A	14.47	-10.658	1.6E-06	-0.7992	-0.0943	-21.7209
245	0.5	Extremo 2A	14.47	-2.102	1.6E-06	-0.7992	-0.0943	-18.531
245	1	Extremo 2A	14.47	6.455	1.6E-06	-0.7992	-0.0943	-19.6192
246	0	Extremo 1A	14.47	-15.278	1.3E-06	-1.6632	-0.0943	-17.7463
246	0.5	Extremo 1A	14.47	-6.721	1.3E-06	-1.6632	-0.0943	-12.2466
246	1	Extremo 1A	14.47	1.835	1.3E-06	-1.6632	-0.0943	-11.025
246	0	Extremo 2A	14.47	-15.278	1.3E-06	-1.6632	-0.0943	-17.7465
246	0.5	Extremo 2A	14.47	-6.721	1.3E-06	-1.6632	-0.0943	-12.2468
246	1	Extremo 2A	14.47	1.835	1.3E-06	-1.6632	-0.0943	-11.0251
247	0	Extremo 1A	14.47	-16.431	9.9E-07	-1.1136	-0.0943	-10.3731
247	0.5	Extremo 1A	14.47	-7.874	9.9E-07	-1.1136	-0.0943	-4.2968
247	1	Extremo 1A	14.47	0.682	9.9E-07	-1.1136	-0.0943	-2.4986
247	0	Extremo 2A	14.47	-16.431	9.9E-07	-1.1136	-0.0943	-10.3732
247	0.5	Extremo 2A	14.47	-7.875	9.9E-07	-1.1136	-0.0943	-4.2968
247	1	Extremo 2A	14.47	0.682	9.9E-07	-1.1136	-0.0943	-2.4986
248	0	Extremo 1A	14.47	-15.405	7.7E-07	-0.3362	-0.0943	-3.1246
248	0.5	Extremo 1A	14.47	-6.849	7.7E-07	-0.3362	-0.0943	2.4389
248	1	Extremo 1A	14.47	1.707	7.7E-07	-0.3362	-0.0943	3.7244
248	0	Extremo 2A	14.47	-15.405	7.7E-07	-0.3362	-0.0943	-3.1247
248	0.5	Extremo 2A	14.47	-6.849	7.7E-07	-0.3362	-0.0943	2.439
248	1	Extremo 2A	14.47	1.707	7.7E-07	-0.3362	-0.0943	3.7245
249	0	Extremo 1A	14.47	-13.733	6E-07	0.0982	-0.0943	2.668
249	0.5	Extremo 1A	14.47	-5.177	6E-07	0.0982	-0.0943	7.3954
249	1	Extremo 1A	14.47	3.38	6E-07	0.0982	-0.0943	7.8446
249	0	Extremo 2A	14.47	-13.733	6E-07	0.0982	-0.0943	2.6681
249	0.5	Extremo 2A	14.47	-5.177	6E-07	0.0982	-0.0943	7.3955
249	1	Extremo 2A	14.47	3.379	6E-07	0.0982	-0.0943	7.8448
250	0	Extremo 1A	14.47	-11.984	4.7E-07	0.208	-0.0943	6.9016
250	0.5	Extremo 1A	14.47	-3.427	4.7E-07	0.208	-0.0943	10.7543
250	1	Extremo 1A	14.47	5.129	4.7E-07	0.208	-0.0943	10.3289
250	0	Extremo 2A	14.47	-11.984	4.7E-07	0.208	-0.0943	6.9017
250	0.5	Extremo 2A	14.47	-3.427	4.7E-07	0.208	-0.0943	10.7545
250	1	Extremo 2A	14.47	5.129	4.7E-07	0.208	-0.0943	10.3292
251	0	Extremo 1A	14.47	-10.263	3.7E-07	0.1392	-0.0943	9.7185
251	0.5	Extremo 1A	14.47	-1.707	3.7E-07	0.1392	-0.0943	12.7111
251	1	Extremo 1A	14.47	6.849	3.7E-07	0.1392	-0.0943	11.4257
251	0	Extremo 2A	14.47	-10.264	3.7E-07	0.1392	-0.0943	9.7188
251	0.5	Extremo 2A	14.47	-1.707	3.7E-07	0.1392	-0.0943	12.7115
251	1	Extremo 2A	14.47	6.849	3.7E-07	0.1392	-0.0943	11.4261
252	0	Extremo 1A	14.47	-8.564	2.9E-07	0.00023	-0.0943	11.2167
252	0.5	Extremo 1A	14.47	-0.00803	2.9E-07	0.00023	-0.0943	13.3598
252	1	Extremo 1A	14.47	8.548	2.9E-07	0.00023	-0.0943	11.2248
252	0	Extremo 2A	14.47	-8.564	2.9E-07	0.00023	-0.0943	11.2171
252	0.5	Extremo 2A	14.47	-0.00816	2.9E-07	0.00023	-0.0943	13.3603
252	1	Extremo 2A	14.47	8.548	2.9E-07	0.00023	-0.0943	11.2253
253	0	Extremo 1A	14.47	-6.865	2.3E-07	-0.1387	-0.0943	11.4316
253	0.5	Extremo 1A	14.47	1.691	2.3E-07	-0.1387	-0.0943	12.7251
253	1	Extremo 1A	14.47	10.247	2.3E-07	-0.1387	-0.0943	9.7405
253	0	Extremo 2A	14.47	-6.865	2.3E-07	-0.1387	-0.0943	11.4321
253	0.5	Extremo 2A	14.47	1.691	2.3E-07	-0.1387	-0.0943	12.7257
253	1	Extremo 2A	14.47	10.247	2.3E-07	-0.1387	-0.0943	9.7411
254	0	Extremo 1A	14.47	-5.145	1.8E-07	-0.2077	-0.0943	10.3488
254	0.5	Extremo 1A	14.47	3.411	1.8E-07	-0.2077	-0.0943	10.7823
254	1	Extremo 1A	14.47	11.967	1.8E-07	-0.2077	-0.0943	6.9377
254	0	Extremo 2A	14.47	-5.145	1.8E-07	-0.2077	-0.0943	10.3494
254	0.5	Extremo 2A	14.47	3.411	1.8E-07	-0.2077	-0.0943	10.783
254	1	Extremo 2A	14.47	11.967	1.8E-07	-0.2077	-0.0943	6.9384
255	0	Extremo 1A	14.47	-3.396	1.4E-07	-0.0984	-0.0943	7.8786
255	0.5	Extremo 1A	14.47	5.16	1.4E-07	-0.0984	-0.0943	7.4376
255	1	Extremo 1A	14.47	13.716	1.4E-07	-0.0984	-0.0943	2.7185
255	0	Extremo 2A	14.47	-3.396	1.4E-07	-0.0984	-0.0943	7.8794
255	0.5	Extremo 2A	14.47	5.16	1.4E-07	-0.0984	-0.0943	7.4384
255	1	Extremo 2A	14.47	13.716	1.4E-07	-0.0984	-0.0943	2.7194
256	0	Extremo 1A	14.47	-1.724	1.1E-07	0.335	-0.0943	3.7731
256	0.5	Extremo 1A	14.47	6.832	1.1E-07	0.335	-0.0943	2.496
256	1	Extremo 1A	14.47	15.389	1.1E-07	0.335	-0.0943	-3.0592
256	0	Extremo 2A	14.47	-1.724	1.1E-07	0.335	-0.0943	3.7739
256	0.5	Extremo 2A	14.47	6.832	1.1E-07	0.335	-0.0943	2.4969
256	1	Extremo 2A	14.47	15.388	1.1E-07	0.335	-0.0943	-3.0582
257	0	Extremo 1A	14.47	-0.697	8.4E-08	1.1107	-0.0943	-2.4336
257	0.5	Extremo 1A	14.47	7.859	8.4E-08	1.1107	-0.0943	-4.2239
257	1	Extremo 1A	14.47	16.415	8.4E-08	1.1107	-0.0943	-10.2924
257	0	Extremo 2A	14.47	-0.698	8.4E-08	1.1107	-0.0943	-2.4326
257	0.5	Extremo 2A	14.47	7.859	8.4E-08	1.1107	-0.0943	-4.2229
257	1	Extremo 2A	14.47	16.415	8.4E-08	1.1107	-0.0943	-10.2913
258	0	Extremo 1A	14.47	-1.845	6.6E-08	1.6593	-0.0943	-10.9419
258	0.5	Extremo 1A	14.47	6.711	6.6E-08	1.6593	-0.0943	-12.1584
258	1	Extremo 1A	14.47	15.267	6.6E-08	1.6593	-0.0943	-17.6529
258	0	Extremo 2A	14.47	-1.845	6.6E-08	1.6592	-0.0943	-10.9408
258	0.5	Extremo 2A	14.47	6.711	6.6E-08	1.6592	-0.0943	-12.1572
258	1	Extremo 2A	14.47	15.267	6.6E-08	1.6592	-0.0943	-17.6518
259	0	Extremo 1A	14.47	-6.452	5.2E-08	0.7973	-0.0943	-19.5206
259	0.5	Extremo 1A	14.47	2.104	5.2E-08	0.7973	-0.0943	-18.4335
259	1	Extremo 1A	14.47	10.66	5.2E-08	0.7973	-0.0943	-21.6245
259	0	Extremo 2A	14.47	-6.452	5.2E-08	0.7972	-0.0943	-19.5194
259	0.5	Extremo 2A	14.47	2.104	5.2E-08	0.7972	-0.0943	-18.4323
259	1	Extremo 2A	14.47	10.66	5.2E-08	0.7972	-0.0943	-21.6234
260	0	Extremo 1A	14.47	-10.667	4E-08	-0.7971	-0.0943	-21.6249
260	0.5	Extremo 1A	14.47	-2.11	4E-08	-0.7971	-0.0943	-18.4306
260	1	Extremo 1A	14.47	6.446	4E-08	-0.7971	-0.0943	-19.5145
260	0	Extremo 2A	14.47	-10.666	4E-08	-0.7971	-0.0943	-21.6237
260	0.5	Extremo 2A	14.47	-2.11	4E-08	-0.7971	-0.0943	-18.4296
260	1	Extremo 2A	14.47	6.446	4E-08	-0.7971	-0.0943	-19.5136
261	0	Extremo 1A	14.47	-15.274	3.2E-08	-1.6591	-0.0943	-17.6476
261	0.5	Extremo 1A	14.47	-6.718	3.2E-08	-1.6591	-0.0943	-12.1498
261	1	Extremo 1A	14.47	1.839	3.2E-08	-1.6591	-0.0943	-10.9301
261	0	Extremo 2A	14.47	-15.273	3.2E-08	-1.6591	-0.0943	-17.6467

261	0.5	Extremo 2A	14.47	-6.717	3.2E-08	-1.6591	-0.0943	-12.1491
261	1	Extremo 2A	14.47	1.839	3.2E-08	-1.6591	-0.0943	-10.9296
262	0	Extremo 1A	14.47	-16.422	2.5E-08	-1.1106	-0.0943	-10.2813
262	0.5	Extremo 1A	14.47	-7.865	2.5E-08	-1.1106	-0.0943	-4.2096
262	1	Extremo 1A	14.47	0.691	2.5E-08	-1.1106	-0.0943	-2.4161
262	0	Extremo 2A	14.47	-16.421	2.5E-08	-1.1105	-0.0943	-10.2808
262	0.5	Extremo 2A	14.47	-7.865	2.5E-08	-1.1105	-0.0943	-4.2094
262	1	Extremo 2A	14.47	0.691	2.5E-08	-1.1105	-0.0943	-2.416
263	0	Extremo 1A	14.47	-15.395	1.9E-08	-0.3349	-0.0943	-3.0424
263	0.5	Extremo 1A	14.47	-6.839	1.9E-08	-0.3349	-0.0943	2.516
263	1	Extremo 1A	14.47	1.717	1.9E-08	-0.3349	-0.0943	3.7963
263	0	Extremo 2A	14.47	-15.395	1.9E-08	-0.3348	-0.0943	-3.0423
263	0.5	Extremo 2A	14.47	-6.838	1.9E-08	-0.3348	-0.0943	2.5159
263	1	Extremo 2A	14.47	1.718	1.9E-08	-0.3348	-0.0943	3.796
264	0	Extremo 1A	14.47	-13.723	1.5E-08	0.0986	-0.0943	2.741
264	0.5	Extremo 1A	14.47	-5.167	1.5E-08	0.0986	-0.0943	7.4634
264	1	Extremo 1A	14.47	3.39	1.5E-08	0.0986	-0.0943	7.9076
264	0	Extremo 2A	14.47	-13.722	1.5E-08	0.0986	-0.0943	2.7407
264	0.5	Extremo 2A	14.47	-5.166	1.5E-08	0.0986	-0.0943	7.4628
264	1	Extremo 2A	14.47	3.39	1.5E-08	0.0986	-0.0943	7.9068
265	0	Extremo 1A	14.47	-11.974	1.2E-08	0.2079	-0.0943	6.9659
265	0.5	Extremo 1A	14.47	-3.418	1.2E-08	0.2079	-0.0943	10.8137
265	1	Extremo 1A	14.47	5.139	1.2E-08	0.2079	-0.0943	10.3835
265	0	Extremo 2A	14.47	-11.973	1.1E-08	0.2078	-0.0943	6.9651
265	0.5	Extremo 2A	14.47	-3.417	1.1E-08	0.2078	-0.0943	10.8128
265	1	Extremo 2A	14.47	5.139	1.1E-08	0.2078	-0.0943	10.3823
266	0	Extremo 1A	14.47	-10.254	9.4E-09	0.1389	-0.0943	9.7744
266	0.5	Extremo 1A	14.47	-1.698	9.4E-09	0.1389	-0.0943	12.7622
266	1	Extremo 1A	14.47	6.859	9.4E-09	0.1389	-0.0943	11.472
266	0	Extremo 2A	14.47	-10.253	8.7E-09	0.1389	-0.0943	9.7733
266	0.5	Extremo 2A	14.47	-1.697	8.7E-09	0.1389	-0.0943	12.7609
266	1	Extremo 2A	14.47	6.859	8.7E-09	0.1389	-0.0943	11.4704
267	0	Extremo 1A	14.47	-8.555	7.3E-09	-4.2E-05	-0.0943	11.2643
267	0.5	Extremo 1A	14.47	0.00148	7.3E-09	-4.2E-05	-0.0943	13.4026
267	1	Extremo 1A	14.47	8.558	7.3E-09	-4.2E-05	-0.0943	11.2628
267	0	Extremo 2A	14.47	-8.554	6.4E-09	-5.5E-05	-0.0943	11.2628
267	0.5	Extremo 2A	14.47	0.00194	6.4E-09	-5.5E-05	-0.0943	13.4009
267	1	Extremo 2A	14.47	8.558	6.4E-09	-5.5E-05	-0.0943	11.2608
268	0	Extremo 1A	14.47	-6.856	5.7E-09	-0.139	-0.0943	11.4709
268	0.5	Extremo 1A	14.47	1.701	5.7E-09	-0.139	-0.0943	12.7597
268	1	Extremo 1A	14.47	10.257	5.7E-09	-0.139	-0.0943	9.7703
268	0	Extremo 2A	14.47	-6.855	4.6E-09	-0.139	-0.0943	11.469
268	0.5	Extremo 2A	14.47	1.701	4.6E-09	-0.139	-0.0943	12.7575
268	1	Extremo 2A	14.47	10.257	4.6E-09	-0.139	-0.0943	9.7679
269	0	Extremo 1A	14.47	-5.136	4.4E-09	-0.2079	-0.0943	10.3798
269	0.5	Extremo 1A	14.47	3.421	4.4E-09	-0.2079	-0.0943	10.8086
269	1	Extremo 1A	14.47	11.977	4.4E-09	-0.2079	-0.0943	6.9592
269	0	Extremo 2A	14.47	-5.135	3E-09	-0.2079	-0.0943	10.3775
269	0.5	Extremo 2A	14.47	3.421	3E-09	-0.2079	-0.0943	10.806
269	1	Extremo 2A	14.47	11.977	3E-09	-0.2079	-0.0943	6.9564
270	0	Extremo 1A	14.47	-3.387	3.4E-09	-0.0985	-0.0943	7.9013
270	0.5	Extremo 1A	14.47	5.17	3.4E-09	-0.0985	-0.0943	7.4556
270	1	Extremo 1A	14.47	13.726	3.4E-09	-0.0985	-0.0943	2.7317
270	0	Extremo 2A	14.47	-3.386	1.6E-09	-0.0985	-0.0943	7.8986
270	0.5	Extremo 2A	14.47	5.17	1.6E-09	-0.0985	-0.0943	7.4526
270	1	Extremo 2A	14.47	13.726	1.6E-09	-0.0985	-0.0943	2.7285
271	0	Extremo 1A	14.47	-1.714	2.6E-09	0.3351	-0.0943	3.7874
271	0.5	Extremo 1A	14.47	6.842	2.6E-09	0.3351	-0.0943	2.5055
271	1	Extremo 1A	14.47	15.398	2.6E-09	0.3351	-0.0943	-3.0545
271	0	Extremo 2A	14.47	-1.714	2.7E-10	0.3351	-0.0943	3.7842
271	0.5	Extremo 2A	14.47	6.842	2.7E-10	0.3351	-0.0943	2.5021
271	1	Extremo 2A	14.47	15.399	2.7E-10	0.3351	-0.0943	-3.0581
272	0	Extremo 1A	14.47	-0.688	1.9E-09	1.1111	-0.0943	-2.4281
272	0.5	Extremo 1A	14.47	7.868	1.9E-09	1.1111	-0.0943	-4.2231
272	1	Extremo 1A	14.47	16.424	1.9E-09	1.1111	-0.0943	-10.2962
272	0	Extremo 2A	14.47	-0.688	-1E-09	1.1112	-0.0943	-2.4317
272	0.5	Extremo 2A	14.47	7.869	-1E-09	1.1112	-0.0943	-4.2269
272	1	Extremo 2A	14.47	16.425	-1E-09	1.1112	-0.0943	-10.3003
273	0	Extremo 1A	14.47	-1.837	1.3E-09	1.6599	-0.0943	-10.9454
273	0.5	Extremo 1A	14.47	6.719	1.3E-09	1.6599	-0.0943	-12.166
273	1	Extremo 1A	14.47	15.276	1.3E-09	1.6599	-0.0943	-17.6648
273	0	Extremo 2A	14.47	-1.837	-2.4E-09	1.6601	-0.0943	-10.9496
273	0.5	Extremo 2A	14.47	6.72	-2.4E-09	1.6601	-0.0943	-12.1704
273	1	Extremo 2A	14.47	15.276	-2.4E-09	1.6601	-0.0943	-17.6692
274	0	Extremo 1A	14.47	-6.446	8.3E-10	0.7975	-0.0943	-19.5326
274	0.5	Extremo 1A	14.47	2.11	8.3E-10	0.7975	-0.0943	-18.4486
274	1	Extremo 1A	14.47	10.666	8.3E-10	0.7975	-0.0943	-21.6426
274	0	Extremo 2A	14.47	-6.447	-4E-09	0.7976	-0.0943	-19.5373
274	0.5	Extremo 2A	14.47	2.11	-4E-09	0.7976	-0.0943	-18.4531
274	1	Extremo 2A	14.47	10.666	-4E-09	0.7976	-0.0943	-21.6469
275	0	Extremo 1A	14.47	-10.663	3.7E-10	-0.7976	-0.0943	-21.6424
275	0.5	Extremo 1A	14.47	-2.107	3.7E-10	-0.7976	-0.0943	-18.4501
275	1	Extremo 1A	14.47	6.45	3.7E-10	-0.7976	-0.0943	-19.5359
275	0	Extremo 2A	14.47	-10.664	-5.8E-09	-0.7976	-0.0943	-21.6468
275	0.5	Extremo 2A	14.47	-2.107	-5.8E-09	-0.7976	-0.0943	-18.454
275	1	Extremo 2A	14.47	6.449	-5.8E-09	-0.7976	-0.0943	-19.5394
276	0	Extremo 1A	14.47	-15.272	-7.8E-11	-1.6599	-0.0943	-17.6677
276	0.5	Extremo 1A	14.47	-6.716	-7.8E-11	-1.6599	-0.0943	-12.1706
276	1	Extremo 1A	14.47	1.84	-7.8E-11	-1.6599	-0.0943	-10.9517
276	0	Extremo 2A	14.47	-15.274	-7.9E-09	-1.6601	-0.0943	-17.6711
276	0.5	Extremo 2A	14.47	-6.717	-7.9E-09	-1.6601	-0.0943	-12.1733
276	1	Extremo 2A	14.47	1.839	-7.9E-09	-1.6601	-0.0943	-10.9536
277	0	Extremo 1A	14.47	-16.421	-5.4E-10	-1.1112	-0.0943	-10.3021
277	0.5	Extremo 1A	14.47	-7.865	-5.4E-10	-1.1112	-0.0943	-4.2307
277	1	Extremo 1A	14.47	0.692	-5.4E-10	-1.1112	-0.0943	-2.4374
277	0	Extremo 2A	14.47	-16.423	-1.1E-08	-1.1113	-0.0943	-10.304
277	0.5	Extremo 2A	14.47	-7.866	-1.1E-08	-1.1113	-0.0943	-4.2318
277	1	Extremo 2A	14.47	0.69	-1.1E-08	-1.1113	-0.0943	-2.4376
278	0	Extremo 1A	14.47	-15.395	-1E-09	-0.3352	-0.0943	-3.0634
278	0.5	Extremo 1A	14.47	-6.838	-1E-09	-0.3352	-0.0943	2.4948
278	1	Extremo 1A	14.47	1.718	-1E-09	-0.3352	-0.0943	3.7749
278	0	Extremo 2A	14.47	-15.396	-1.4E-08	-0.3352	-0.0943	-3.0638
278	0.5	Extremo 2A	14.47	-6.84	-1.4E-08	-0.3352	-0.0943	2.4953
278	1	Extremo 2A	14.47	1.716	-1.4E-08	-0.3352	-0.0943	3.7763
279	0	Extremo 1A	14.47	-13.722	-1.6E-09	0.0985	-0.0943	2.7197
279	0.5	Extremo 1A	14.47	-5.166	-1.6E-09	0.0985	-0.0943	7.4418
279	1	Extremo 1A	14.47	3.39	-1.6E-09	0.0985	-0.0943	7.8859
279	0	Extremo 2A	14.47	-13.724	-1.8E-08	0.0985	-0.0943	2.7209
279	0.5	Extremo 2A	14.47	-5.168	-1.8E-08	0.0985	-0.0943	7.4439
279	1	Extremo 2A	14.47	3.388	-1.8E-08	0.0985	-0.0943	7.8888
280	0	Extremo 1A	14.47	-11.973	-2.3E-09	0.2078	-0.0943	6.9441
280	0.5	Extremo 1A	14.47	-3.417	-2.3E-09	0.2078	-0.0943	10.7918
280	1	Extremo 1A	14.47	5.139	-2.3E-09	0.2078	-0.0943	10.3613
280	0	Extremo 2A	14.47	-11.975	-2.3E-08	0.2079	-0.0943	6.9469
280	0.5	Extremo 2A	14.47	-3.419	-2.3E-08	0.2079	-0.0943	10.7954
280	1	Extremo 2A	14.47	5.137	-2.3E-08	0.2079	-0.0943	10.3657
281	0	Extremo 1A	14.47	-10.253	-3.1E-09	0.1389	-0.0943	9.7522
281	0.5	Extremo 1A	14.47	-1.697	-3.1E-09	0.1389	-0.0943	12.7398
281	1	Extremo 1A	14.47	6.859	-3.1E-09	0.1389	-0.0943	11.4493
281	0	Extremo 2A	14.47	-10.255	-3E-08	0.1389	-0.0943	9.7565
281	0.5	Extremo 2A	14.47	-1.699	-3E-08	0.1389	-0.0943	12.7449
281	1	Extremo 2A	14.47	6.857	-3E-08	0.1389	-0.0943	11.4553
282	0	Extremo 1A	14.47	-8.554	-4.1E-09	-5.8E-05	-0.0943	11.2417
282	0.5	Extremo 1A	14.47	0.00202	-4.1E-09	-5.8E-05	-0.0943	13.3797
282	1	Extremo 1A	14.47	8.558	-4.1E-09	-5.8E-05	-0.0943	11.2397
282	0	Extremo 2A	14.47	-8.556	-3.8E-08	-7.5E-06	-0.0943	11.2474
282	0.5	Extremo 2A	14.47	0.00028	-3.8E-08	-7.5E-06	-0.0943	13.3864
282	1	Extremo 2A	14.47	8.557	-3.8E-08	-7.5E-06	-0.0943	11.2472
283	0	Extremo 1A	14.47	-6.855	-5.3E-09	-0.139	-0.0943	11.4478
283	0.5	Extremo 1A	14.47	1.701	-5.3E-09	-0.139	-0.0943	12.7363
283	1	Extremo 1A	14.47	10.257	-5.3E-09	-0.139	-0.0943	9.7467
283	0	Extremo 2A	14.47	-6.857	-4.9E-08	-0.139	-0.0943	11.4551
283	0.5	Extremo 2A	14.47	1.699	-4.9E-08	-0.139	-0.0943	12.7445
283	1	Extremo 2A	14.47	10.256	-4.9E-08	-0.139	-0.0943	9.7557
284	0	Extremo 1A	14.47	-5.135	-6.9E-09	-0.2079	-0.0943	10.3563
284	0.5	Extremo 1A	14.47	3.421	-6.9E-09	-0.2079	-0.0943	10.7847
284	1	Extremo 1A	14.47	11.977	-6.9E-09	-0.2079	-0.0943	6.9351
284	0	Extremo 2A	14.47	-5.137	-6.3E-08	-0.2079	-0.0943	10.365
284	0.5	Extremo 2A	14.47	3.419	-6.3E-08	-0.2079	-0.0943	10.7944
284	1	Extremo 2A	14.47	11.976	-6.3E-08	-0.2079	-0.0943	6.9456
285	0	Extremo 1A	14.47	-3.386	-8.9E-09	-0.0984	-0.0943	7.8773
285	0.5	Extremo 1A	14.47	5.17	-8.9E-09	-0.0984	-0.0943	7.4312
285	1	Extremo 1A	14.47	13.727	-8.9E-09	-0.0984	-0.0943	2.707
285	0	Extremo 2A	14.47	-3.388	-8E-08	-0.0985	-0.0943	7.8876

285	0.5	Extremo 2A	14.47	5.169	-8E-08	-0.0985	-0.0943	7.4424
285	1	Extremo 2A	14.47	13.725	-8E-08	-0.0985	-0.0943	2.7191
286	0	Extremo 1A	14.47	-1.714	-1.1E-08	0.3355	-0.0943	3.7627
286	0.5	Extremo 1A	14.47	6.843	-1.1E-08	0.3355	-0.0943	2.4804
286	1	Extremo 1A	14.47	15.399	-1.1E-08	0.3355	-0.0943	-3.0799
286	0	Extremo 2A	14.47	-1.716	-1E-07	0.3352	-0.0943	3.7746
286	0.5	Extremo 2A	14.47	6.841	-1E-07	0.3352	-0.0943	2.4933
286	1	Extremo 2A	14.47	15.397	-1E-07	0.3352	-0.0943	-3.0661
287	0	Extremo 1A	14.47	-0.688	-1.5E-08	1.1119	-0.0943	-2.4538
287	0.5	Extremo 1A	14.47	7.869	-1.5E-08	1.1119	-0.0943	-4.249
287	1	Extremo 1A	14.47	16.425	-1.5E-08	1.1119	-0.0943	-10.3224
287	0	Extremo 2A	14.47	-0.689	-1.3E-07	1.1114	-0.0943	-2.4399
287	0.5	Extremo 2A	14.47	7.867	-1.3E-07	1.1114	-0.0943	-4.2343
287	1	Extremo 2A	14.47	16.423	-1.3E-07	1.1114	-0.0943	-10.3069
288	0	Extremo 1A	14.47	-1.838	-1.9E-08	1.6609	-0.0943	-10.9726
288	0.5	Extremo 1A	14.47	6.719	-1.9E-08	1.6609	-0.0943	-12.1928
288	1	Extremo 1A	14.47	15.275	-1.9E-08	1.6609	-0.0943	-17.6912
288	0	Extremo 2A	14.47	-1.838	-1.7E-07	1.6602	-0.0943	-10.9565
288	0.5	Extremo 2A	14.47	6.718	-1.7E-07	1.6602	-0.0943	-12.1764
288	1	Extremo 2A	14.47	15.274	-1.7E-07	1.6602	-0.0943	-17.6743
289	0	Extremo 1A	14.47	-6.45	-2.4E-08	0.7981	-0.0943	-19.5606
289	0.5	Extremo 1A	14.47	2.106	-2.4E-08	0.7981	-0.0943	-18.4745
289	1	Extremo 1A	14.47	10.662	-2.4E-08	0.7981	-0.0943	-21.6666
289	0	Extremo 2A	14.47	-6.449	-2.2E-07	0.7977	-0.0943	-19.5428
289	0.5	Extremo 2A	14.47	2.107	-2.2E-07	0.7977	-0.0943	-18.4574
289	1	Extremo 2A	14.47	10.664	-2.2E-07	0.7977	-0.0943	-21.6501
290	0	Extremo 1A	14.47	-10.67	-3.1E-08	-0.7979	-0.0943	-21.667
290	0.5	Extremo 1A	14.47	-2.113	-3.1E-08	-0.7979	-0.0943	-18.4712
290	1	Extremo 1A	14.47	6.443	-3.1E-08	-0.7979	-0.0943	-19.5535
290	0	Extremo 2A	14.47	-10.666	-2.8E-07	-0.7977	-0.0943	-21.6503
290	0.5	Extremo 2A	14.47	-2.11	-2.8E-07	-0.7977	-0.0943	-18.4562
290	1	Extremo 2A	14.47	6.446	-2.8E-07	-0.7977	-0.0943	-19.5402
291	0	Extremo 1A	14.47	-15.282	-4E-08	-1.6608	-0.0943	-17.6849
291	0.5	Extremo 1A	14.47	-6.726	-4E-08	-1.6608	-0.0943	-12.1828
291	1	Extremo 1A	14.47	1.83	-4E-08	-1.6608	-0.0943	-10.9588
291	0	Extremo 2A	14.47	-15.277	-3.6E-07	-1.6602	-0.0943	-17.672
291	0.5	Extremo 2A	14.47	-6.721	-3.6E-07	-1.6602	-0.0943	-12.1727
291	1	Extremo 2A	14.47	1.836	-3.6E-07	-1.6602	-0.0943	-10.9515
292	0	Extremo 1A	14.47	-16.432	-5.1E-08	-1.1117	-0.0943	-10.3095
292	0.5	Extremo 1A	14.47	-7.876	-5.1E-08	-1.1117	-0.0943	-4.2323
292	1	Extremo 1A	14.47	0.68	-5.1E-08	-1.1117	-0.0943	-2.4333
292	0	Extremo 2A	14.47	-16.426	-4.6E-07	-1.1113	-0.0943	-10.3021
292	0.5	Extremo 2A	14.47	-7.87	-4.6E-07	-1.1113	-0.0943	-4.2282
292	1	Extremo 2A	14.47	0.687	-4.6E-07	-1.1113	-0.0943	-2.4324
293	0	Extremo 1A	14.47	-15.406	-6.5E-08	-0.3353	-0.0943	-3.0603
293	0.5	Extremo 1A	14.47	-6.85	-6.5E-08	-0.3353	-0.0943	2.5039
293	1	Extremo 1A	14.47	1.706	-6.5E-08	-0.3353	-0.0943	3.7899
293	0	Extremo 2A	14.47	-15.4	-5.9E-07	-0.3352	-0.0943	-3.0589
293	0.5	Extremo 2A	14.47	-6.843	-5.9E-07	-0.3352	-0.0943	2.5019
293	1	Extremo 2A	14.47	1.713	-5.9E-07	-0.3352	-0.0943	3.7846
294	0	Extremo 1A	14.47	-13.734	-8.3E-08	0.0986	-0.0943	2.7333
294	0.5	Extremo 1A	14.47	-5.178	-8.3E-08	0.0986	-0.0943	7.4613
294	1	Extremo 1A	14.47	3.378	-8.3E-08	0.0986	-0.0943	7.9112
294	0	Extremo 2A	14.47	-13.727	-7.5E-07	0.0985	-0.0943	2.7287
294	0.5	Extremo 2A	14.47	-5.171	-7.5E-07	0.0985	-0.0943	7.4534
294	1	Extremo 2A	14.47	3.385	-7.5E-07	0.0985	-0.0943	7.9
295	0	Extremo 1A	14.47	-11.985	-1.1E-07	0.2081	-0.0943	6.968
295	0.5	Extremo 1A	14.47	-3.429	-1.1E-07	0.2081	-0.0943	10.8215
295	1	Extremo 1A	14.47	5.127	-1.1E-07	0.2081	-0.0943	10.3968
295	0	Extremo 2A	14.47	-11.978	-9.7E-07	0.2079	-0.0943	6.9577
295	0.5	Extremo 2A	14.47	-3.422	-9.7E-07	0.2079	-0.0943	10.8078
295	1	Extremo 2A	14.47	5.134	-9.7E-07	0.2079	-0.0943	10.3798
296	0	Extremo 1A	14.47	-10.265	-1.4E-07	0.1392	-0.0943	9.7863
296	0.5	Extremo 1A	14.47	-1.709	-1.4E-07	0.1392	-0.0943	12.7798
296	1	Extremo 1A	14.47	6.847	-1.4E-07	0.1392	-0.0943	11.4951
296	0	Extremo 2A	14.47	-10.258	-1.2E-06	0.139	-0.0943	9.7702
296	0.5	Extremo 2A	14.47	-1.702	-1.2E-06	0.139	-0.0943	12.7603
296	1	Extremo 2A	14.47	6.854	-1.2E-06	0.139	-0.0943	11.4723
297	0	Extremo 1A	14.47	-8.566	-1.7E-07	0.00028	-0.0943	11.2859
297	0.5	Extremo 1A	14.47	-0.00969	-1.7E-07	0.00028	-0.0943	13.4298
297	1	Extremo 1A	14.47	8.547	-1.7E-07	0.00028	-0.0943	11.2956
297	0	Extremo 2A	14.47	-8.559	-1.6E-06	7.7E-05	-0.0943	11.2641
297	0.5	Extremo 2A	14.47	-0.00305	-1.6E-06	7.7E-05	-0.0943	13.4047
297	1	Extremo 2A	14.47	8.553	-1.6E-06	7.7E-05	-0.0943	11.2671
298	0	Extremo 1A	14.47	-6.867	-2.2E-07	-0.1387	-0.0943	11.5022
298	0.5	Extremo 1A	14.47	1.689	-2.2E-07	-0.1387	-0.0943	12.7966
298	1	Extremo 1A	14.47	10.246	-2.2E-07	-0.1387	-0.0943	9.8129
298	0	Extremo 2A	14.47	-6.86	-2.1E-06	-0.1389	-0.0943	11.4746
298	0.5	Extremo 2A	14.47	1.696	-2.1E-06	-0.1389	-0.0943	12.7657
298	1	Extremo 2A	14.47	10.252	-2.1E-06	-0.1389	-0.0943	9.7786
299	0	Extremo 1A	14.47	-5.147	-2.9E-07	-0.2078	-0.0943	10.4208
299	0.5	Extremo 1A	14.47	3.409	-2.9E-07	-0.2078	-0.0943	10.8553
299	1	Extremo 1A	14.47	11.965	-2.9E-07	-0.2078	-0.0943	7.0116
299	0	Extremo 2A	14.47	-5.14	-2.6E-06	-0.2078	-0.0943	10.3875
299	0.5	Extremo 2A	14.47	3.416	-2.6E-06	-0.2078	-0.0943	10.8185
299	1	Extremo 2A	14.47	11.972	-2.6E-06	-0.2078	-0.0943	6.9715
300	0	Extremo 1A	14.47	-3.398	-3.7E-07	-0.0988	-0.0943	7.9522
300	0.5	Extremo 1A	14.47	5.158	-3.7E-07	-0.0988	-0.0943	7.5123
300	1	Extremo 1A	14.47	13.714	-3.7E-07	-0.0988	-0.0943	2.7942
300	0	Extremo 2A	14.47	-3.391	-3.4E-06	-0.0986	-0.0943	7.913
300	0.5	Extremo 2A	14.47	5.165	-3.4E-06	-0.0986	-0.0943	7.4696
300	1	Extremo 2A	14.47	13.721	-3.4E-06	-0.0986	-0.0943	2.748
301	0	Extremo 1A	14.47	-1.726	-4.7E-07	0.3338	-0.0943	3.8487
301	0.5	Extremo 1A	14.47	6.83	-4.7E-07	0.3338	-0.0943	2.5727
301	1	Extremo 1A	14.47	15.386	-4.7E-07	0.3338	-0.0943	-2.9813
301	0	Extremo 2A	14.47	-1.719	-4.4E-06	0.3348	-0.0943	3.8031
301	0.5	Extremo 2A	14.47	6.837	-4.4E-06	0.3348	-0.0943	2.5237
301	1	Extremo 2A	14.47	15.393	-4.4E-06	0.3348	-0.0943	-3.0339
302	0	Extremo 1A	14.47	-0.699	-6E-07	1.1082	-0.0943	-2.3549
302	0.5	Extremo 1A	14.47	7.857	-6E-07	1.1082	-0.0943	-4.1444
302	1	Extremo 1A	14.47	16.414	-6E-07	1.1082	-0.0943	-10.2122
302	0	Extremo 2A	14.47	-0.693	-5.6E-06	1.1103	-0.0943	-2.4077
302	0.5	Extremo 2A	14.47	7.864	-5.6E-06	1.1103	-0.0943	-4.2005
302	1	Extremo 2A	14.47	16.42	-5.6E-06	1.1103	-0.0943	-10.2714
303	0	Extremo 1A	14.47	-1.842	-7.7E-07	1.656	-0.0943	-10.8585
303	0.5	Extremo 1A	14.47	6.714	-7.7E-07	1.656	-0.0943	-12.0763
303	1	Extremo 1A	14.47	15.27	-7.7E-07	1.656	-0.0943	-17.5723
303	0	Extremo 2A	14.47	-1.84	-7.3E-06	1.6589	-0.0943	-10.92
303	0.5	Extremo 2A	14.47	6.716	-7.3E-06	1.6589	-0.0943	-12.1392
303	1	Extremo 2A	14.47	15.273	-7.3E-06	1.6589	-0.0943	-17.6365
304	0	Extremo 1A	14.47	-6.44	-9.9E-07	0.7955	-0.0943	-19.4348
304	0.5	Extremo 1A	14.47	2.116	-9.9E-07	0.7955	-0.0943	-18.3539
304	1	Extremo 1A	14.47	10.673	-9.9E-07	0.7955	-0.0943	-21.5512
304	0	Extremo 2A	14.47	-6.446	-9.4E-06	0.7971	-0.0943	-19.503
304	0.5	Extremo 2A	14.47	2.111	-9.4E-06	0.7971	-0.0943	-18.4193
304	1	Extremo 2A	14.47	10.667	-9.4E-06	0.7971	-0.0943	-21.6137
305	0	Extremo 1A	14.47	-10.645	-1.3E-06	-0.7962	-0.0943	-21.5495
305	0.5	Extremo 1A	14.47	-2.089	-1.3E-06	-0.7962	-0.0943	-18.366
305	1	Extremo 1A	14.47	6.467	-1.3E-06	-0.7962	-0.0943	-19.4606
305	0	Extremo 2A	14.47	-10.659	-1.2E-05	-0.7968	-0.0943	-21.6136
305	0.5	Extremo 2A	14.47	-2.102	-1.2E-05	-0.7968	-0.0943	-18.4233
305	1	Extremo 2A	14.47	6.454	-1.2E-05	-0.7968	-0.0943	-19.5112
306	0	Extremo 1A	14.47	-15.243	-1.6E-06	-1.6567	-0.0943	-17.5947
306	0.5	Extremo 1A	14.47	-6.686	-1.6E-06	-1.6567	-0.0943	-12.1125
306	1	Extremo 1A	14.47	1.87	-1.6E-06	-1.6567	-0.0943	-10.9084
306	0	Extremo 2A	14.47	-15.264	-1.6E-05	-1.6585	-0.0943	-17.6443
306	0.5	Extremo 2A	14.47	-6.708	-1.6E-05	-1.6585	-0.0943	-12.1511
306	1	Extremo 2A	14.47	1.848	-1.6E-05	-1.6585	-0.0943	-10.9361
307	0	Extremo 1A	14.47	-16.386	-2.1E-06	-1.1089	-0.0943	-10.2587
307	0.5	Extremo 1A	14.47	-7.83	-2.1E-06	-1.1089	-0.0943	-4.2047
307	1	Extremo 1A	14.47	0.726	-2.1E-06	-1.1089	-0.0943	-2.4288
307	0	Extremo 2A	14.47	-16.412	-2E-05	-1.11	-0.0943	-10.2872
307	0.5	Extremo 2A	14.47	-7.855	-2E-05	-1.11	-0.0943	-4.2204
307	1	Extremo 2A	14.47	0.701	-2E-05	-1.11	-0.0943	-2.4318
308	0	Extremo 1A	14.47	-15.359	-2.7E-06	-0.3345	-0.0943	-3.0519
308	0.5	Extremo 1A	14.47	-6.803	-2.7E-06	-0.3345	-0.0943	2.4884
308	1	Extremo 1A	14.47	1.754	-2.7E-06	-0.3345	-0.0943	3.7506
308	0	Extremo 2A	14.469	-15.385	-2.6E-05	-0.3345	-0.0943	-3.0577
308	0.5	Extremo 2A	14.469	-6.829	-2.6E-05	-0.3345	-0.0943	2.4958
308	1	Extremo 2A	14.469	1.727	-2.6E-05	-0.3345	-0.0943	3.7711
309	0	Extremo 1A	14.47	-13.687	-3.5E-06	0.0981	-0.0943	2.6995
309	0.5	Extremo 1A	14.47	-5.131	-3.5E-06	0.0981	-0.0943	7.4038
309	1	Extremo 1A	14.47	3.426	-3.5E-06	0.0981	-0.0943	7.83
309	0	Extremo 2A	14.469	-13.713	-3.4E-05	0.0988	-0.0943	2.7163

309	0.5	Extremo 2A	14.469	-5.157	-3.4E-05	0.0988	-0.0943	7.4337
309	1	Extremo 2A	14.469	3.4	-3.4E-05	0.0988	-0.0943	7.8729
310	0	Extremo 1A	14.47	-11.938	-4.5E-06	0.207	-0.0943	6.8929
310	0.5	Extremo 1A	14.47	-3.382	-4.5E-06	0.207	-0.0943	10.7228
310	1	Extremo 1A	14.47	5.175	-4.5E-06	0.207	-0.0943	10.2745
310	0	Extremo 2A	14.469	-11.964	-4.4E-05	0.208	-0.0943	6.9318
310	0.5	Extremo 2A	14.469	-3.408	-4.4E-05	0.208	-0.0943	10.7747
310	1	Extremo 2A	14.469	5.149	-4.4E-05	0.208	-0.0943	10.3395
311	0	Extremo 1A	14.47	-10.218	-5.8E-06	0.1379	-0.0943	9.6701
311	0.5	Extremo 1A	14.47	-1.662	-5.8E-06	0.1379	-0.0943	12.64
311	1	Extremo 1A	14.47	6.895	-5.8E-06	0.1379	-0.0943	11.3318
311	0	Extremo 2A	14.469	-10.244	-5.7E-05	0.139	-0.0943	9.7311
311	0.5	Extremo 2A	14.469	-1.688	-5.7E-05	0.139	-0.0943	12.7139
311	1	Extremo 2A	14.469	6.869	-5.7E-05	0.139	-0.0943	11.4187
312	0	Extremo 1A	14.47	-8.519	-7.5E-06	-0.0011	-0.0943	11.1289
312	0.5	Extremo 1A	14.47	0.037	-7.5E-06	-0.0011	-0.0943	13.2492
312	1	Extremo 1A	14.47	8.594	-7.5E-06	-0.0011	-0.0943	11.0914
312	0	Extremo 2A	14.469	-8.545	-7.4E-05	-8.1E-05	-0.0943	11.2118
312	0.5	Extremo 2A	14.469	0.012	-7.4E-05	-8.1E-05	-0.0943	13.3451
312	1	Extremo 2A	14.469	8.568	-7.4E-05	-8.1E-05	-0.0943	11.2003
313	0	Extremo 1A	14.47	-6.819	-9.6E-06	-0.1399	-0.0943	11.3044
313	0.5	Extremo 1A	14.47	1.737	-9.6E-06	-0.1399	-0.0943	12.5751
313	1	Extremo 1A	14.47	10.293	-9.6E-06	-0.1399	-0.0943	9.5676
313	0	Extremo 2A	14.469	-6.845	-9.6E-05	-0.1392	-0.0943	11.4093
313	0.5	Extremo 2A	14.469	1.711	-9.6E-05	-0.1392	-0.0943	12.693
313	1	Extremo 2A	14.469	10.267	-9.6E-05	-0.1392	-0.0942	9.6986
314	0	Extremo 1A	14.47	-5.099	-1.2E-05	-0.2083	-0.0943	10.1822
314	0.5	Extremo 1A	14.47	3.457	-1.2E-05	-0.2083	-0.0943	10.5925
314	1	Extremo 1A	14.47	12.014	-1.2E-05	-0.2083	-0.0943	6.7248
314	0	Extremo 2A	14.469	-5.125	-0.00012	-0.2083	-0.0944	10.3093
314	0.5	Extremo 2A	14.469	3.431	-0.00012	-0.2083	-0.0943	10.7329
314	1	Extremo 2A	14.469	11.987	-0.00012	-0.2083	-0.0942	6.8783
315	0	Extremo 1A	14.47	-3.349	-1.6E-05	-0.0971	-0.0943	7.6719
315	0.5	Extremo 1A	14.47	5.207	-1.6E-05	-0.0971	-0.0943	7.2072
315	1	Extremo 1A	14.47	13.764	-1.6E-05	-0.0971	-0.0943	2.4644
315	0	Extremo 2A	14.469	-3.376	-0.00016	-0.099	-0.0944	7.8222
315	0.5	Extremo 2A	14.469	5.181	-0.00016	-0.099	-0.0943	7.3709
315	1	Extremo 2A	14.469	13.737	-0.00016	-0.099	-0.0942	2.6415
316	0	Extremo 1A	14.47	-1.676	-2.1E-05	0.3405	-0.0943	3.5237
316	0.5	Extremo 1A	14.47	6.88	-2.1E-05	0.3405	-0.0943	2.2226
316	1	Extremo 1A	14.47	15.437	-2.1E-05	0.3405	-0.0943	-3.3566
316	0	Extremo 2A	14.469	-1.703	-0.00021	0.335	-0.0944	3.6993
316	0.5	Extremo 2A	14.469	6.854	-0.00021	0.335	-0.0943	2.4116
316	1	Extremo 2A	14.469	15.41	-0.00021	0.335	-0.0942	-3.1542
317	0	Extremo 1A	14.469	-0.654	-2.7E-05	1.1229	-0.0943	-2.7317
317	0.5	Extremo 1A	14.469	7.903	-2.7E-05	1.1229	-0.0943	-4.544
317	1	Extremo 1A	14.469	16.459	-2.7E-05	1.1229	-0.0943	-10.6344
317	0	Extremo 2A	14.468	-0.677	-0.00027	1.1117	-0.0944	-2.5259
317	0.5	Extremo 2A	14.468	7.88	-0.00027	1.1117	-0.0943	-4.3266
317	1	Extremo 2A	14.468	16.436	-0.00027	1.1117	-0.0941	-10.4054
318	0	Extremo 1A	14.469	-1.823	-3.5E-05	1.6759	-0.0943	-11.2963
318	0.5	Extremo 1A	14.469	6.733	-3.5E-05	1.6759	-0.0943	-12.5239
318	1	Extremo 1A	14.469	15.29	-3.5E-05	1.6759	-0.0943	-18.0297
318	0	Extremo 2A	14.468	-1.83	-0.00036	1.6603	-0.0945	-11.0541
318	0.5	Extremo 2A	14.468	6.726	-0.00036	1.6603	-0.0943	-12.2781
318	1	Extremo 2A	14.468	15.282	-0.00036	1.6603	-0.0941	-17.7803
319	0	Extremo 1A	14.469	-6.48	-4.5E-05	0.8064	-0.0943	-19.9202
319	0.5	Extremo 1A	14.469	2.077	-4.5E-05	0.8064	-0.0943	-18.8195
319	1	Extremo 1A	14.469	10.633	-4.5E-05	0.8064	-0.0943	-21.9969
319	0	Extremo 2A	14.467	-6.451	-0.00047	0.7944	-0.0945	-19.6483
319	0.5	Extremo 2A	14.467	2.105	-0.00047	0.7944	-0.0943	-18.5618
319	1	Extremo 2A	14.467	10.661	-0.00047	0.7944	-0.094	-21.7534
320	0	Extremo 1A	14.469	-10.74	-5.8E-05	-0.8016	-0.0943	-22.0049
320	0.5	Extremo 1A	14.469	-2.184	-5.8E-05	-0.8016	-0.0943	-18.7739
320	1	Extremo 1A	14.469	6.372	-5.8E-05	-0.8016	-0.0943	-19.8211
320	0	Extremo 2A	14.467	-10.678	-0.00061	-0.8058	-0.0946	-21.7468
320	0.5	Extremo 2A	14.467	-2.122	-0.00061	-0.8058	-0.0943	-18.5468
320	1	Extremo 2A	14.467	6.434	-0.00061	-0.8058	-0.094	-19.6249
321	0	Extremo 1A	14.469	-15.397	-7.5E-05	-1.6711	-0.0943	-17.9465
321	0.5	Extremo 1A	14.469	-6.841	-7.5E-05	-1.6711	-0.0943	-12.3872
321	1	Extremo 1A	14.469	1.716	-7.5E-05	-1.6711	-0.0943	-11.106
321	0	Extremo 2A	14.466	-15.299	-0.0008	-1.6716	-0.0946	-17.7438
321	0.5	Extremo 2A	14.466	-6.743	-0.0008	-1.6716	-0.0942	-12.2332
321	1	Extremo 2A	14.466	1.813	-0.0008	-1.6716	-0.0938	-11.0008
322	0	Extremo 1A	14.469	-16.566	-9.8E-05	-1.118	-0.0943	-10.4601
322	0.5	Extremo 1A	14.469	-8.01	-9.8E-05	-1.118	-0.0943	-4.3161
322	1	Extremo 1A	14.469	0.546	-9.8E-05	-1.118	-0.0942	-2.4502
322	0	Extremo 2A	14.465	-16.453	-0.00105	-1.1229	-0.0948	-10.339
322	0.5	Extremo 2A	14.465	-7.896	-0.00105	-1.1229	-0.0942	-4.2518
322	1	Extremo 2A	14.465	0.66	-0.00105	-1.1229	-0.0937	-2.4427
323	0	Extremo 1A	14.469	-15.544	-0.00013	-0.3357	-0.0944	-3.0911
323	0.5	Extremo 1A	14.469	-6.988	-0.00013	-0.3357	-0.0943	2.5417
323	1	Extremo 1A	14.469	1.569	-0.00013	-0.3357	-0.0942	3.8964
323	0	Extremo 2A	14.463	-15.427	-0.00137	-0.3459	-0.0949	-3.0581
323	0.5	Extremo 2A	14.463	-6.87	-0.00137	-0.3459	-0.0942	2.5161
323	1	Extremo 2A	14.463	1.686	-0.00137	-0.3459	-0.0935	3.8123
324	0	Extremo 1A	14.469	-13.871	-0.00017	0.102	-0.0944	2.8211
324	0.5	Extremo 1A	14.469	-5.315	-0.00017	0.102	-0.0943	7.6175
324	1	Extremo 1A	14.469	3.241	-0.00017	0.102	-0.0942	8.1358
324	0	Extremo 2A	14.462	-13.754	-0.0018	0.0886	-0.0951	2.767
324	0.5	Extremo 2A	14.462	-5.198	-0.0018	0.0886	-0.0942	7.5049
324	1	Extremo 2A	14.462	3.359	-0.0018	0.0886	-0.0933	7.9647
325	0	Extremo 1A	14.469	-12.121	-0.00022	0.2132	-0.0944	7.1725
325	0.5	Extremo 1A	14.469	-3.565	-0.00022	0.2132	-0.0943	11.094
325	1	Extremo 1A	14.469	4.991	-0.00022	0.2132	-0.0942	10.7374
325	0	Extremo 2A	14.459	-12.005	-0.00237	0.1988	-0.0953	7.0329
325	0.5	Extremo 2A	14.459	-3.448	-0.00237	0.1988	-0.0941	10.8961
325	1	Extremo 2A	14.459	5.108	-0.00237	0.1988	-0.093	10.4812
326	0	Extremo 1A	14.468	-10.401	-0.00028	0.1448	-0.0944	10.1065
326	0.5	Extremo 1A	14.468	-1.845	-0.00028	0.1448	-0.0943	13.1678
326	1	Extremo 1A	14.468	6.712	-0.00028	0.1448	-0.0941	11.9511
326	0	Extremo 2A	14.456	-10.285	-0.00311	0.1313	-0.0956	9.8814
326	0.5	Extremo 2A	14.456	-1.728	-0.00311	0.1313	-0.0941	12.8847
326	1	Extremo 2A	14.456	6.828	-0.00311	0.1313	-0.0925	11.6099
327	0	Extremo 1A	14.468	-8.702	-0.00037	0.0055	-0.0945	11.7216
327	0.5	Extremo 1A	14.468	-0.146	-0.00037	0.0055	-0.0943	13.9335
327	1	Extremo 1A	14.468	8.411	-0.00037	0.0055	-0.0941	11.8672
327	0	Extremo 2A	14.451	-8.586	-0.0041	-0.005	-0.0961	11.4099
327	0.5	Extremo 2A	14.451	-0.03	-0.0041	-0.005	-0.094	13.564
327	1	Extremo 2A	14.451	8.526	-0.0041	-0.005	-0.092	11.4399
328	0	Extremo 1A	14.467	-7.004	-0.00048	-0.1349	-0.0945	12.0536
328	0.5	Extremo 1A	14.467	1.553	-0.00048	-0.1349	-0.0943	13.4163
328	1	Extremo 1A	14.467	10.109	-0.00048	-0.1349	-0.094	10.5009
328	0	Extremo 2A	14.446	-6.889	-0.00541	-0.1392	-0.0966	11.6525
328	0.5	Extremo 2A	14.446	1.668	-0.00541	-0.1392	-0.0939	12.9577
328	1	Extremo 2A	14.446	10.224	-0.00541	-0.1392	-0.0912	9.9849
329	0	Extremo 1A	14.467	-5.285	-0.00062	-0.2077	-0.0946	11.0891
329	0.5	Extremo 1A	14.467	3.271	-0.00062	-0.2077	-0.0943	11.5927
329	1	Extremo 1A	14.467	11.827	-0.00062	-0.2077	-0.0939	7.8181
329	0	Extremo 2A	14.438	-5.172	-0.00715	-0.2004	-0.0974	10.5928
329	0.5	Extremo 2A	14.438	3.385	-0.00715	-0.2004	-0.0938	11.0395
329	1	Extremo 2A	14.438	11.941	-0.00715	-0.2004	-0.0902	7.2081
330	0	Extremo 1A	14.466	-3.539	-0.00082	-0.1078	-0.0947	8.7414
330	0.5	Extremo 1A	14.466	5.017	-0.00082	-0.1078	-0.0942	8.3718
330	1	Extremo 1A	14.466	13.573	-0.00082	-0.1078	-0.0938	3.7242
330	0	Extremo 2A	14.428	-3.428	-0.00946	-0.079	-0.0983	8.1382
330	0.5	Extremo 2A	14.428	5.128	-0.00946	-0.079	-0.0936	7.7133
330	1	Extremo 2A	14.428	13.684	-0.00946	-0.079	-0.0889	3.0102
331	0	Extremo 1A	14.465	-1.868	-0.00107	0.3063	-0.0948	4.77
331	0.5	Extremo 1A	14.465	6.689	-0.00107	0.3063	-0.0942	3.5647
331	1	Extremo 1A	14.465	15.245	-0.00107	0.3063	-0.0937	-1.9187
331	0	Extremo 2A	14.415	-1.767	-0.013	0.3722	-0.0996	4.0366
331	0.5	Extremo 2A	14.415	6.79	-0.013	0.3722	-0.0934	2.7808
331	1	Extremo 2A	14.415	15.346	-0.013	0.3722	-0.0871	-2.7531
332	0	Extremo 1A	14.463	-0.822	-0.0014	1.0523	-0.0949	-1.2765
332	0.5	Extremo 1A	14.463	7.734	-0.0014	1.0523	-0.0942	-3.0046
332	1	Extremo 1A	14.463	16.291	-0.0014	1.0523	-0.0935	-9.0108
332	0	Extremo 2A	14.397	-0.758	-0.017	1.1717	-0.1014	-2.1824
332	0.5	Extremo 2A	14.397	7.799	-0.017	1.1717	-0.0931	-3.9426
332	1	Extremo 2A	14.397	16.355	-0.017	1.1717	-0.0847	-9.981
333	0	Extremo 1A	14.461	-1.883	-0.00184	1.5785	-0.0951	-9.5925
333	0.5	Extremo 1A	14.461	6.673	-0.00184	1.5785	-0.0942	-10.7898
333	1	Extremo 1A	14.461	15.229	-0.00184	1.5785	-0.0933	-16.2654
333	0	Extremo 2A	14.374	-1.931	-0.022	1.75	-0.1037	-10.7228

333	0.5	Extremo 2A	14.374	6.625	-0.022	1.75	-0.0926	-11.8962
333	1	Extremo 2A	14.374	15.181	-0.022	1.75	-0.0816	-17.3477
334	0	Extremo 1A	14.459	-6.297	-0.00241	0.7381	-0.0953	-18.016
334	0.5	Extremo 1A	14.459	2.259	-0.00241	0.7381	-0.0941	-17.0066
334	1	Extremo 1A	14.459	10.816	-0.00241	0.7381	-0.0929	-20.2753
334	0	Extremo 2A	14.343	-6.571	-0.029	0.9225	-0.1068	-19.3555
334	0.5	Extremo 2A	14.343	1.985	-0.029	0.9225	-0.0921	-18.2091
334	1	Extremo 2A	14.343	10.542	-0.029	0.9225	-0.0774	-21.3408
335	0	Extremo 1A	14.455	-10.33	-0.00318	-0.8118	-0.0957	-20.2058
335	0.5	Extremo 1A	14.455	-1.774	-0.00318	-0.8118	-0.0941	-17.1798
335	1	Extremo 1A	14.455	6.782	-0.00318	-0.8118	-0.0925	-18.432
335	0	Extremo 2A	14.302	-10.822	-0.039	-0.6358	-0.1109	-21.5374
335	0.5	Extremo 2A	14.302	-2.265	-0.039	-0.6358	-0.0913	-18.2657
335	1	Extremo 2A	14.302	6.291	-0.039	-0.6358	-0.0717	-19.2722
336	0	Extremo 1A	14.451	-14.744	-0.00418	-1.6521	-0.0961	-16.5423
336	0.5	Extremo 1A	14.451	-6.187	-0.00418	-1.6521	-0.094	-11.3095
336	1	Extremo 1A	14.451	2.369	-0.00418	-1.6521	-0.0919	-10.3549
336	0	Extremo 2A	14.247	-15.461	-0.052	-1.4638	-0.1165	-17.6574
336	0.5	Extremo 2A	14.247	-6.905	-0.052	-1.4638	-0.0903	-12.0658
336	1	Extremo 2A	14.247	1.651	-0.052	-1.4638	-0.0641	-10.7524
337	0	Extremo 1A	14.445	-15.805	-0.00552	-1.1254	-0.0967	-9.6344
337	0.5	Extremo 1A	14.445	-7.249	-0.00552	-1.1254	-0.0939	-3.871
337	1	Extremo 1A	14.445	1.308	-0.00552	-1.1254	-0.0911	-2.3857
337	0	Extremo 2A	14.173	-16.635	-0.07	-0.8866	-0.1239	-10.4032
337	0.5	Extremo 2A	14.173	-8.079	-0.07	-0.8866	-0.0889	-4.2246
337	1	Extremo 2A	14.173	0.477	-0.07	-0.8866	-0.0538	-2.3242
338	0	Extremo 1A	14.438	-14.759	-0.00729	-0.3785	-0.0974	-2.8894
338	0.5	Extremo 1A	14.438	-6.203	-0.00729	-0.3785	-0.0938	2.3511
338	1	Extremo 1A	14.438	2.353	-0.00729	-0.3785	-0.0901	3.3136
338	0	Extremo 2A	14.074	-15.627	-0.094	-0.0892	-0.134	-3.2864
338	0.5	Extremo 2A	14.074	-7.07	-0.094	-0.0892	-0.0869	2.3879
338	1	Extremo 2A	14.074	1.486	-0.094	-0.0892	-0.0399	3.7841
339	0	Extremo 1A	14.427	-13.088	-0.00964	0.0375	-0.0984	2.4054
339	0.5	Extremo 1A	14.427	-4.531	-0.00964	0.0375	-0.0936	6.8103
339	1	Extremo 1A	14.427	4.025	-0.00964	0.0375	-0.0888	6.9369
339	0	Extremo 2A	13.941	-13.966	-0.126	0.3576	-0.1476	2.3685
339	0.5	Extremo 2A	13.941	-5.409	-0.126	0.3576	-0.0843	7.2122
339	1	Extremo 2A	13.941	3.147	-0.126	0.3576	-0.0211	7.7777
340	0	Extremo 1A	14.414	-11.342	-0.013	0.1411	-0.0997	6.1495
340	0.5	Extremo 1A	14.414	-2.785	-0.013	0.1411	-0.0934	9.6813
340	1	Extremo 1A	14.414	5.771	-0.013	0.1411	-0.087	8.935
340	0	Extremo 2A	13.762	-12.223	-0.17	0.4711	-0.1659	6.4631
340	0.5	Extremo 2A	13.762	-3.666	-0.17	0.4711	-0.0808	10.4353
340	1	Extremo 2A	13.762	4.89	-0.17	0.4711	0.0044	10.1294
341	0	Extremo 1A	14.396	-9.624	-0.017	0.0755	-0.1015	8.4791
341	0.5	Extremo 1A	14.396	-1.068	-0.017	0.0755	-0.093	11.1519
341	1	Extremo 1A	14.396	7.489	-0.017	0.0755	-0.0846	9.5466
341	0	Extremo 2A	13.521	-10.505	-0.23	0.3954	-0.1908	9.1459
341	0.5	Extremo 2A	13.521	-1.949	-0.23	0.3954	-0.0759	12.2595
341	1	Extremo 2A	13.521	6.607	-0.23	0.3954	0.0389	11.095
342	0	Extremo 1A	14.372	-7.926	-0.022	-0.0508	-0.1039	9.4857
342	0.5	Extremo 1A	14.372	0.63	-0.022	-0.0508	-0.0926	11.3098
342	1	Extremo 1A	14.372	9.186	-0.022	-0.0508	-0.0814	8.8558
342	0	Extremo 2A	13.193	-8.807	-0.31	0.2355	-0.2245	10.5238
342	0.5	Extremo 2A	13.193	-0.251	-0.31	0.2355	-0.0694	12.7882
342	1	Extremo 2A	13.193	8.306	-0.31	0.2355	0.0858	10.7744
343	0	Extremo 1A	14.341	-6.229	-0.03	-0.1625	-0.107	9.197
343	0.5	Extremo 1A	14.341	2.327	-0.03	-0.1625	-0.092	10.1725
343	1	Extremo 1A	14.341	10.883	-0.03	-0.1625	-0.0771	6.8698
343	0	Extremo 2A	12.749	-7.106	-0.419	0.0542	-0.27	10.6462
343	0.5	Extremo 2A	12.749	1.45	-0.419	0.0542	-0.0606	12.0604
343	1	Extremo 2A	12.749	10.006	-0.419	0.0542	0.1489	9.1964
344	0	Extremo 1A	14.299	-4.511	-0.04	-0.1774	-0.1112	7.5852
344	0.5	Extremo 1A	14.299	4.045	-0.04	-0.1774	-0.0913	7.7018
344	1	Extremo 1A	14.299	12.601	-0.04	-0.1774	-0.0713	3.5403
344	0	Extremo 2A	12.144	-5.386	-0.564	-0.0924	-0.331	9.5219
344	0.5	Extremo 2A	12.144	3.17	-0.564	-0.0924	-0.049	10.0758
344	1	Extremo 2A	12.144	11.726	-0.564	-0.0924	0.233	6.3517
345	0	Extremo 1A	14.243	-2.77	-0.053	0.0355	-0.1168	4.5316
345	0.5	Extremo 1A	14.243	5.787	-0.053	0.0355	-0.0902	3.7773
345	1	Extremo 1A	14.243	14.343	-0.053	0.0355	-0.0636	-1.2551
345	0	Extremo 2A	11.323	-3.636	-0.752	-0.1187	-0.4104	7.1061
345	0.5	Extremo 2A	11.323	4.92	-0.752	-0.1187	-0.0343	6.7849
345	1	Extremo 2A	11.323	13.477	-0.752	-0.1187	0.3417	2.1856
346	0	Extremo 1A	14.168	-1.137	-0.071	0.6519	-0.1244	-0.2725
346	0.5	Extremo 1A	14.168	7.42	-0.071	0.6519	-0.0888	-1.8432
346	1	Extremo 1A	14.168	15.976	-0.071	0.6519	-0.0531	-7.692
346	0	Extremo 2A	10.224	-1.869	-0.976	0.1245	-0.5054	3.2461
346	0.5	Extremo 2A	10.224	6.687	-0.976	0.1245	-0.0171	2.0416
346	1	Extremo 2A	10.224	15.243	-0.976	0.1245	0.4711	-3.441
347	0	Extremo 1A	14.067	-0.294	-0.096	1.6944	-0.1346	-7.3937
347	0.5	Extremo 1A	14.067	8.262	-0.096	1.6944	-0.0868	-9.3857
347	1	Extremo 1A	14.067	16.818	-0.096	1.6944	-0.0391	-15.6559
347	0	Extremo 2A	8.818	-0.176	-1.178	0.855	-0.5978	-2.4609
347	0.5	Extremo 2A	8.818	8.38	-1.178	0.855	-0.0086	-4.5118
347	1	Extremo 2A	8.818	16.936	-1.178	0.855	0.5806	-10.8409
348	0	Extremo 1A	13.933	-2.051	-0.128	2.4876	-0.1484	-17.0807
348	0.5	Extremo 1A	13.933	6.506	-0.128	2.4876	-0.0842	-18.1944
348	1	Extremo 1A	13.933	15.062	-0.128	2.4876	-0.02	-23.5863
348	0	Extremo 2A	7.234	-0.00098	-1.262	1.7487	-0.6779	-11.1355
348	0.5	Extremo 2A	7.234	8.555	-1.262	1.7487	-0.0471	-13.2741
348	1	Extremo 2A	7.234	17.112	-1.262	1.7487	0.5837	-19.6908
349	0	Extremo 1A	13.751	-7.917	-0.173	1.6261	-0.167	-26.7033
349	0.5	Extremo 1A	13.751	0.639	-0.173	1.6261	-0.0806	-24.8839
349	1	Extremo 1A	13.751	9.196	-0.173	1.6261	0.0058	-27.3426
349	0	Extremo 2A	5.65	-4.208	-1.179	0.9163	-0.6749	-21.5486
349	0.5	Extremo 2A	5.65	4.349	-1.179	0.9163	-0.0857	-21.5838
349	1	Extremo 2A	5.65	12.905	-1.179	0.9163	0.5036	-25.8972
350	0	Extremo 1A	13.506	-13.332	-0.233	-0.1068	-0.1922	-28.5319
350	0.5	Extremo 1A	13.506	-4.776	-0.233	-0.1068	-0.0757	-24.0048
350	1	Extremo 1A	13.506	3.78	-0.233	-0.1068	0.0408	-23.7558
350	0	Extremo 2A	4.244	-9.224	-0.977	-1.2169	-0.5655	-25.2508
350	0.5	Extremo 2A	4.244	-0.668	-0.977	-1.2169	-0.0772	-22.7777
350	1	Extremo 2A	4.244	7.888	-0.977	-1.2169	0.4112	-24.5827
351	0	Extremo 1A	13.174	-19.194	-0.315	-1.0064	-0.2264	-23.0021
351	0.5	Extremo 1A	13.174	-10.638	-0.315	-1.0064	-0.0691	-15.5441
351	1	Extremo 1A	13.174	-2.082	-0.315	-1.0064	0.0882	-12.3641
351	0	Extremo 2A	3.145	-15.494	-0.752	-2.4576	-0.4361	-21.3846
351	0.5	Extremo 2A	3.145	-6.938	-0.752	-2.4576	-0.0599	-15.7766
351	1	Extremo 2A	3.145	1.618	-0.752	-2.4576	0.3163	-14.4468
352	0	Extremo 1A	12.723	-20.942	-0.425	-0.303	-0.2725	-13.2513
352	0.5	Extremo 1A	12.723	-12.386	-0.425	-0.303	-0.0602	-4.9195
352	1	Extremo 1A	12.723	-3.829	-0.425	-0.303	0.1521	-0.8657
352	0	Extremo 2A	2.323	-17.533	-0.564	-1.7914	-0.3274	-12.8584
352	0.5	Extremo 2A	2.323	-8.977	-0.564	-1.7914	-0.0452	-6.231
352	1	Extremo 2A	2.323	-0.42	-0.564	-1.7914	0.237	-3.8817
353	0	Extremo 1A	12.11	-20.085	-0.571	0.5657	-0.3342	-3.37
353	0.5	Extremo 1A	12.11	-11.529	-0.571	0.5657	-0.0485	4.5336
353	1	Extremo 1A	12.11	-2.973	-0.571	0.5657	0.2372	8.1591
353	0	Extremo 2A	1.718	-16.797	-0.42	-0.7515	-0.2435	-4.0942
353	0.5	Extremo 2A	1.718	-8.241	-0.42	-0.7515	-0.0337	2.1655
353	1	Extremo 2A	1.718	0.315	-0.42	-0.7515	0.1761	4.147
354	0	Extremo 1A	11.279	-18.423	-0.762	0.8672	-0.4146	5.1766
354	0.5	Extremo 1A	11.279	-9.867	-0.762	0.8672	-0.0336	12.249
354	1	Extremo 1A	11.279	-1.311	-0.762	0.8672	0.3474	15.0434
354	0	Extremo 2A	1.272	-15.198	-0.311	-0.1124	-0.1804	3.1851
354	0.5	Extremo 2A	1.272	-6.642	-0.311	-0.1124	-0.0249	8.6453
354	1	Extremo 2A	1.272	1.914	-0.311	-0.1124	0.1307	9.8273
355	0	Extremo 1A	10.167	-16.499	-0.989	0.5835	-0.5109	12.4665
355	0.5	Extremo 1A	10.167	-7.943	-0.989	0.5835	-0.0162	18.5769
355	1	Extremo 1A	10.167	0.614	-0.989	0.5835	0.4786	20.4091
355	0	Extremo 2A	0.944	-13.466	-0.231	0.1167	-0.1337	8.8234
355	0.5	Extremo 2A	0.944	-4.91	-0.231	0.1167	-0.0183	13.4175
355	1	Extremo 2A	0.944	3.646	-0.231	0.1167	0.0971	13.7335
356	0	Extremo 1A	8.743	-13.804	-1.196	0.0832	-0.6052	18.8914
356	0.5	Extremo 1A	8.743	-5.248	-1.196	0.0832	-0.0073	23.6544
356	1	Extremo 1A	8.743	3.309	-1.196	0.0832	0.5905	24.1392
356	0	Extremo 2A	0.701	-11.749	-0.172	0.1066	-0.0993	12.9933
356	0.5	Extremo 2A	0.701	-3.193	-0.172	0.1066	-0.0134	16.7287
356	1	Extremo 2A	0.701	5.364	-0.172	0.1066	0.0725	16.1858
357	0	Extremo 1A	7.134	-9.855	-1.284	-0.1072	-0.6877	23.7296
357	0.5	Extremo 1A	7.134	-1.299	-1.284	-0.1072	-0.0454	26.5181
357	1	Extremo 1A	7.134	7.257	-1.284	-0.1072	0.5968	25.0285
357	0	Extremo 2A	0.52	-10.044	-0.128	-0.0113	-0.074	15.8213

357	0.5	Extremo 2A	0.52	-1.487	-0.128	-0.0113	-0.0098	18.704
357	1	Extremo 2A	0.52	7.069	-0.128	-0.0113	0.0544	17.3086
358	0	Extremo 1A	5.518	-5.903	-1.209	-0.2961	-0.6878	25.4722
358	0.5	Extremo 1A	5.518	2.654	-1.209	-0.2961	-0.0834	26.2844
358	1	Extremo 1A	5.518	11.21	-1.209	-0.2961	0.521	22.8185
358	0	Extremo 2A	0.384	-8.33	-0.097	-0.1554	-0.0555	17.3569
358	0.5	Extremo 2A	0.384	0.226	-0.097	-0.1554	-0.0072	19.3827
358	1	Extremo 2A	0.384	8.783	-0.097	-0.1554	0.0411	17.1305
359	0	Extremo 1A	4.07	-3.21	-1.017	-0.7999	-0.5826	24.3548
359	0.5	Extremo 1A	4.07	5.347	-1.017	-0.7999	-0.0741	23.8206
359	1	Extremo 1A	4.07	13.903	-1.017	-0.7999	0.4345	19.0082
359	0	Extremo 2A	0.282	-6.595	-0.073	-0.2616	-0.042	17.5876
359	0.5	Extremo 2A	0.282	1.961	-0.073	-0.2616	-0.0052	18.746
359	1	Extremo 2A	0.282	10.518	-0.073	-0.2616	0.0315	15.6263
360	0	Extremo 1A	2.916	-1.361	-0.806	-1.1436	-0.4589	21.5548
360	0.5	Extremo 1A	2.916	7.196	-0.806	-1.1436	-0.0557	20.096
360	1	Extremo 1A	2.916	15.752	-0.806	-1.1436	0.3475	14.359
360	0	Extremo 2A	0.203	-4.879	-0.057	-0.2715	-0.0321	16.4215
360	0.5	Extremo 2A	0.203	3.678	-0.057	-0.2715	-0.0037	16.7217
360	1	Extremo 2A	0.203	12.234	-0.057	-0.2715	0.0247	12.7439
361	0	Extremo 1A	2.022	-0.035	-0.637	-1.1438	-0.3574	17.2329
361	0.5	Extremo 1A	2.022	8.521	-0.637	-1.1438	-0.039	15.1113
361	1	Extremo 1A	2.022	17.078	-0.637	-1.1438	0.2793	8.7115
361	0	Extremo 2A	0.142	-3.426	-0.045	-0.2086	-0.025	13.6724
361	0.5	Extremo 2A	0.142	5.13	-0.045	-0.2086	-0.0025	13.2463
361	1	Extremo 2A	0.142	13.687	-0.045	-0.2086	0.02	8.5421
362	0	Extremo 1A	1.325	0.063	-0.516	-1.207	-0.2815	11.2296
362	0.5	Extremo 1A	1.325	8.619	-0.516	-1.207	-0.0235	9.0591
362	1	Extremo 1A	1.325	17.175	-0.516	-1.207	0.2345	2.6104
362	0	Extremo 2A	0.094	-2.89	-0.037	-0.3939	-0.0199	9.292
362	0.5	Extremo 2A	0.094	5.667	-0.037	-0.3939	-0.0014	8.5978
362	1	Extremo 2A	0.094	14.223	-0.037	-0.3939	0.017	3.6254
363	0	Extremo 1A	0.772	-1.658	-0.433	-2.1237	-0.221	4.7382
363	0.5	Extremo 1A	0.772	6.898	-0.433	-2.1237	-0.0045	3.4282
363	1	Extremo 1A	0.772	15.454	-0.433	-2.1237	0.2119	-2.1598
363	0	Extremo 2A	0.055	-3.653	-0.031	-1.433	-0.0157	4.361
363	0.5	Extremo 2A	0.055	4.903	-0.031	-1.433	-0.0001	4.0484
363	1	Extremo 2A	0.055	13.46	-0.031	-1.433	0.0155	-0.5424
364	0	Extremo 1A	0.334	-2.29	-0.335	-3.3104	-0.1437	1.3606
364	0.5	Extremo 1A	0.334	6.266	-0.335	-3.3104	0.0238	0.3665
364	1	Extremo 1A	0.334	14.823	-0.335	-3.3104	0.1912	-4.9058
364	0	Extremo 2A	0.024	-3.045	-0.024	-2.7194	-0.0101	1.7901
364	0.5	Extremo 2A	0.024	5.511	-0.024	-2.7194	0.0018	1.1737
364	1	Extremo 2A	0.024	14.067	-0.024	-2.7194	0.0137	-3.721
365	0	Extremo 1A	3.79	-17.393	4.074	3.8546	2.5162	-6.0037
365	0.5	Extremo 1A	3.79	-6.921	4.074	3.8546	0.4789	0.0749
365	1	Extremo 1A	3.79	3.55	4.074	3.8546	-1.5583	0.9177
365	0	Extremo 2A	3.79	-17.393	4.074	3.8546	2.5162	-6.0037
365	0.5	Extremo 2A	3.79	-6.921	4.074	3.8546	0.4789	0.0749
365	1	Extremo 2A	3.79	3.55	4.074	3.8546	-1.5583	0.9177
366	0	Extremo 1A	7.659	-19.331	4.327	0.8061	2.5449	-3.7964
366	0.5	Extremo 1A	7.659	-8.859	4.327	0.8061	0.3816	3.2513
366	1	Extremo 1A	7.659	1.612	4.327	0.8061	-1.7817	5.0631
366	0	Extremo 2A	7.659	-19.331	4.327	0.8061	2.5449	-3.7964
366	0.5	Extremo 2A	7.659	-8.859	4.327	0.8061	0.3816	3.2513
366	1	Extremo 2A	7.659	1.612	4.327	0.8061	-1.7817	5.0631
367	0	Extremo 1A	11.317	-18.798	3.746	0.0251	2.1024	2.5741
367	0.5	Extremo 1A	11.317	-8.326	3.746	0.0251	0.2294	9.3553
367	1	Extremo 1A	11.317	2.145	3.746	0.0251	-1.6436	10.9006
367	0	Extremo 2A	11.317	-18.798	3.746	0.0251	2.1024	2.5741
367	0.5	Extremo 2A	11.317	-8.326	3.746	0.0251	0.2294	9.3553
367	1	Extremo 2A	11.317	2.145	3.746	0.0251	-1.6436	10.9006
368	0	Extremo 1A	14.083	-14.311	2.956	0.176	1.5819	8.5922
368	0.5	Extremo 1A	14.083	-3.839	2.956	0.176	0.1039	13.1298
368	1	Extremo 1A	14.083	6.633	2.956	0.176	-1.3742	12.4314
368	0	Extremo 2A	14.083	-14.311	2.956	0.176	1.5819	8.5922
368	0.5	Extremo 2A	14.083	-3.839	2.956	0.176	0.1039	13.1298
368	1	Extremo 2A	14.083	6.633	2.956	0.176	-1.3742	12.4314
369	0	Extremo 1A	15.987	-8.352	2.255	0.1232	1.1437	11.707
369	0.5	Extremo 1A	15.987	2.12	2.255	0.1232	0.0163	13.265
369	1	Extremo 1A	15.987	12.592	2.255	0.1232	-1.1111	9.5871
369	0	Extremo 2A	15.987	-8.352	2.255	0.1232	1.1437	11.707

369	0.5	Extremo 2A	15.987	2.12	2.255	0.1232	0.0163	13.265
369	1	Extremo 2A	15.987	12.592	2.255	0.1232	-1.1111	9.5871
370	0	Extremo 1A	17.258	-2.035	1.698	-0.0451	0.8023	11.4144
370	0.5	Extremo 1A	17.258	8.437	1.698	-0.0451	-0.047	9.8138
370	1	Extremo 1A	17.258	18.909	1.698	-0.0451	-0.8962	2.9772
370	0	Extremo 2A	17.258	-2.035	1.698	-0.0451	0.8023	11.4144
370	0.5	Extremo 2A	17.258	8.437	1.698	-0.0451	-0.047	9.8138
370	1	Extremo 2A	17.258	18.909	1.698	-0.0451	-0.8962	2.9772
371	0	Extremo 1A	18.105	4.167	1.273	0.1857	0.5425	7.4066
371	0.5	Extremo 1A	18.105	14.639	1.273	0.1857	-0.0941	2.7049
371	1	Extremo 1A	18.105	25.111	1.273	0.1857	-0.7308	-7.2327
371	0	Extremo 2A	18.105	4.167	1.273	0.1857	0.5425	7.4066
371	0.5	Extremo 2A	18.105	14.639	1.273	0.1857	-0.0941	2.7049
371	1	Extremo 2A	18.105	25.111	1.273	0.1857	-0.7308	-7.2327
372	0	Extremo 1A	18.676	9.216	0.953	1.5301	0.347	-1.3538
372	0.5	Extremo 1A	18.676	19.688	0.953	1.5301	-0.1295	-8.5798
372	1	Extremo 1A	18.676	30.16	0.953	1.5301	-0.606	-21.0418
372	0	Extremo 2A	18.676	9.216	0.953	1.5301	0.347	-1.3538
372	0.5	Extremo 2A	18.676	19.688	0.953	1.5301	-0.1295	-8.5798
372	1	Extremo 2A	18.676	30.16	0.953	1.5301	-0.606	-21.0418
373	0	Extremo 1A	19.069	9.459	0.713	4.0859	0.2007	-17.056
373	0.5	Extremo 1A	19.069	19.931	0.713	4.0859	-0.156	-24.4036
373	1	Extremo 1A	19.069	30.403	0.713	4.0859	-0.5126	-36.9871
373	0	Extremo 2A	19.069	9.459	0.713	4.0859	0.2007	-17.056
373	0.5	Extremo 2A	19.069	19.931	0.713	4.0859	-0.156	-24.4035
373	1	Extremo 2A	19.069	30.403	0.713	4.0859	-0.5126	-36.987
374	0	Extremo 1A	19.344	-3.357	0.534	4.3546	0.0914	-39.4857
374	0.5	Extremo 1A	19.344	7.115	0.534	4.3546	-0.1757	-40.4251
374	1	Extremo 1A	19.344	17.587	0.534	4.3546	-0.4429	-46.6004
374	0	Extremo 2A	19.344	-3.357	0.534	4.3546	0.0914	-39.4857
374	0.5	Extremo 2A	19.344	7.115	0.534	4.3546	-0.1757	-40.4251
374	1	Extremo 2A	19.344	17.587	0.534	4.3546	-0.4429	-46.6004
375	0	Extremo 1A	19.541	-25.508	0.401	-3.17	0.0099	-48.8296
375	0.5	Extremo 1A	19.541	-15.036	0.401	-3.17	-0.1904	-38.6935
375	1	Extremo 1A	19.541	-4.564	0.401	-3.17	-0.3907	-33.7933
375	0	Extremo 2A	19.541	-25.508	0.401	-3.17	0.0099	-48.8296
375	0.5	Extremo 2A	19.541	-15.036	0.401	-3.17	-0.1904	-38.6935
375	1	Extremo 2A	19.541	-4.564	0.401	-3.17	-0.3907	-33.7933
376	0	Extremo 1A	19.684	-38.349	0.301	-2.8913	-0.0509	-35.7656
376	0.5	Extremo 1A	19.684	-27.877	0.301	-2.8913	-0.2013	-19.2089
376	1	Extremo 1A	19.684	-17.405	0.301	-2.8913	-0.3517	-7.8882
376	0	Extremo 2A	19.684	-38.349	0.301	-2.8913	-0.0509	-35.7655
376	0.5	Extremo 2A	19.684	-27.877	0.301	-2.8913	-0.2013	-19.2089
376	1	Extremo 2A	19.684	-17.405	0.301	-2.8913	-0.3517	-7.8882
377	0	Extremo 1A	19.79	-38.162	0.226	-0.3165	-0.0964	-16.3842
377	0.5	Extremo 1A	19.79	-27.69	0.226	-0.3165	-0.2095	0.0787
377	1	Extremo 1A	19.79	-17.218	0.226	-0.3165	-0.3226	11.3057
377	0	Extremo 2A	19.79	-38.162	0.226	-0.3165	-0.0964	-16.3842
377	0.5	Extremo 2A	19.79	-27.69	0.226	-0.3165	-0.2095	0.0787
377	1	Extremo 2A	19.79	-17.218	0.226	-0.3165	-0.3226	11.3057
378	0	Extremo 1A	19.868	-33.211	0.17	1.0475	-0.1304	0.8466
378	0.5	Extremo 1A	19.868	-22.739	0.17	1.0475	-0.2155	14.8342
378	1	Extremo 1A	19.868	-12.267	0.17	1.0475	-0.3007	23.5859
378	0	Extremo 2A	19.868	-33.211	0.17	1.0475	-0.1304	0.8466
378	0.5	Extremo 2A	19.868	-22.739	0.17	1.0475	-0.2155	14.8342
378	1	Extremo 2A	19.868	-12.267	0.17	1.0475	-0.3007	23.5858
379	0	Extremo 1A	19.928	-27.157	0.128	1.2646	-0.1558	14.4856
379	0.5	Extremo 1A	19.928	-16.685	0.128	1.2646	-0.22	25.4462
379	1	Extremo 1A	19.928	-6.213	0.128	1.2646	-0.2842	31.1709
379	0	Extremo 2A	19.928	-27.157	0.128	1.2646	-0.1558	14.4856
379	0.5	Extremo 2A	19.928	-16.685	0.128	1.2646	-0.22	25.4462
379	1	Extremo 2A	19.928	-6.213	0.128	1.2646	-0.2842	31.1709
380	0	Extremo 1A	19.973	-20.99	0.097	0.9533	-0.1749	24.6383
380	0.5	Extremo 1A	19.973	-10.518	0.097	0.9533	-0.2234	32.5154
380	1	Extremo 1A	19.973	-0.046	0.097	0.9533	-0.2719	35.1566
380	0	Extremo 2A	19.973	-20.99	0.097	0.9533	-0.1749	24.6383
380	0.5	Extremo 2A	19.973	-10.518	0.097	0.9533	-0.2234	32.5154
380	1	Extremo 2A	19.973	-0.046	0.097	0.9533	-0.2719	35.1566
381	0	Extremo 1A	20.007	-14.881	0.073	0.4638	-0.1892	31.4814
381	0.5	Extremo 1A	20.007	-4.409	0.073	0.4638	-0.2259	36.3039
381	1	Extremo 1A	20.007	6.063	0.073	0.4638	-0.2626	35.8905
381	0	Extremo 2A	20.007	-14.881	0.073	0.4638	-0.1892	31.4814

381	0.5	Extremo 2A	20.007	-4.409	0.073	0.4638	-0.2259	36.3039
381	1	Extremo 2A	20.007	6.063	0.073	0.4638	-0.2626	35.8905
382	0	Extremo 1A	20.033	-8.813	0.056	-0.0712	-0.2	35.1045
382	0.5	Extremo 1A	20.033	1.659	0.056	-0.0712	-0.2278	36.8931
382	1	Extremo 1A	20.033	12.131	0.056	-0.0712	-0.2555	33.4457
382	0	Extremo 2A	20.033	-8.813	0.056	-0.0712	-0.2	35.1045
382	0.5	Extremo 2A	20.033	1.659	0.056	-0.0712	-0.2278	36.893
382	1	Extremo 2A	20.033	12.131	0.056	-0.0712	-0.2555	33.4456
383	0	Extremo 1A	20.053	-2.74	0.042	-0.6035	-0.2081	35.5458
383	0.5	Extremo 1A	20.053	7.731	0.042	-0.6035	-0.2292	34.298
383	1	Extremo 1A	20.053	18.203	0.042	-0.6035	-0.2502	27.8143
383	0	Extremo 2A	20.053	-2.74	0.042	-0.6035	-0.2081	35.5457
383	0.5	Extremo 2A	20.053	7.731	0.042	-0.6035	-0.2292	34.298
383	1	Extremo 2A	20.053	18.203	0.042	-0.6035	-0.2502	27.8143
384	0	Extremo 1A	20.069	3.383	0.032	-1.0797	-0.2142	32.8068
384	0.5	Extremo 1A	20.069	13.855	0.032	-1.0797	-0.2302	28.4973
384	1	Extremo 1A	20.069	24.327	0.032	-1.0797	-0.2462	18.9517
384	0	Extremo 2A	20.069	3.383	0.032	-1.0797	-0.2142	32.8068
384	0.5	Extremo 2A	20.069	13.855	0.032	-1.0797	-0.2302	28.4972
384	1	Extremo 2A	20.069	24.327	0.032	-1.0797	-0.2462	18.9517
385	0	Extremo 1A	20.081	9.572	0.024	-1.3447	-0.2188	26.7971
385	0.5	Extremo 1A	20.081	20.044	0.024	-1.3447	-0.231	19.3931
385	1	Extremo 1A	20.081	30.516	0.024	-1.3447	-0.2432	6.7532
385	0	Extremo 2A	20.081	9.572	0.024	-1.3447	-0.2188	26.7971
385	0.5	Extremo 2A	20.081	20.044	0.024	-1.3447	-0.231	19.3931
385	1	Extremo 2A	20.081	30.516	0.024	-1.3447	-0.2432	6.7531
386	0	Extremo 1A	20.09	15.622	0.019	-0.9888	-0.2223	17.1064
386	0.5	Extremo 1A	20.09	26.094	0.019	-0.9888	-0.2316	6.6774
386	1	Extremo 1A	20.09	36.566	0.019	-0.9888	-0.2409	-8.9874
386	0	Extremo 2A	20.09	15.622	0.019	-0.9888	-0.2223	17.1063
386	0.5	Extremo 2A	20.09	26.094	0.019	-0.9888	-0.2316	6.6774
386	1	Extremo 2A	20.09	36.566	0.019	-0.9888	-0.2409	-8.9875
387	0	Extremo 1A	20.097	20.374	0.014	0.7099	-0.225	2.4522
387	0.5	Extremo 1A	20.097	30.846	0.014	0.7099	-0.232	-10.353
387	1	Extremo 1A	20.097	41.318	0.014	0.7099	-0.2391	-28.3941
387	0	Extremo 2A	20.097	20.374	0.014	0.7099	-0.225	2.4521
387	0.5	Extremo 2A	20.097	30.846	0.014	0.7099	-0.232	-10.3531
387	1	Extremo 2A	20.097	41.318	0.014	0.7099	-0.2391	-28.3942
388	0	Extremo 1A	20.102	19.564	0.011	3.8268	-0.227	-19.7543
388	0.5	Extremo 1A	20.102	30.036	0.011	3.8268	-0.2324	-32.1543
388	1	Extremo 1A	20.102	40.508	0.011	3.8268	-0.2378	-49.7903
388	0	Extremo 2A	20.102	19.564	0.011	3.8268	-0.227	-19.7543
388	0.5	Extremo 2A	20.102	30.036	0.011	3.8268	-0.2324	-32.1544
388	1	Extremo 2A	20.102	40.508	0.011	3.8268	-0.2378	-49.7903
389	0	Extremo 1A	20.107	3.569	0.00823	4.2799	-0.2285	-49.2812
389	0.5	Extremo 1A	20.107	14.041	0.00823	4.2799	-0.2326	-53.6839
389	1	Extremo 1A	20.107	24.513	0.00823	4.2799	-0.2367	-63.3225
389	0	Extremo 2A	20.107	3.569	0.00823	4.28	-0.2285	-49.2813
389	0.5	Extremo 2A	20.107	14.041	0.00823	4.28	-0.2326	-53.6839
389	1	Extremo 2A	20.107	24.513	0.00823	4.28	-0.2367	-63.3226
390	0	Extremo 1A	20.11	-23.277	0.0063	-4.342	-0.2297	-63.0725
390	0.5	Extremo 1A	20.11	-12.806	0.0063	-4.342	-0.2328	-54.0517
390	1	Extremo 1A	20.11	-2.334	0.0063	-4.342	-0.236	-50.2669
390	0	Extremo 2A	20.11	-23.277	0.0063	-4.342	-0.2297	-63.0725
390	0.5	Extremo 2A	20.11	-12.806	0.0063	-4.342	-0.2328	-54.0518
390	1	Extremo 2A	20.11	-2.334	0.0063	-4.342	-0.236	-50.2669
391	0	Extremo 1A	20.112	-39.272	0.00482	-3.8889	-0.2306	-50.2758
391	0.5	Extremo 1A	20.112	-28.8	0.00482	-3.8889	-0.233	-33.2578
391	1	Extremo 1A	20.112	-18.328	0.00482	-3.8889	-0.2354	-21.4757
391	0	Extremo 2A	20.112	-39.272	0.00482	-3.8889	-0.2306	-50.2758
391	0.5	Extremo 2A	20.112	-28.8	0.00482	-3.8889	-0.233	-33.2578
391	1	Extremo 2A	20.112	-18.328	0.00482	-3.8889	-0.2354	-21.4757
392	0	Extremo 1A	20.114	-40.082	0.0037	-0.7721	-0.2312	-29.6151
392	0.5	Extremo 1A	20.114	-29.61	0.0037	-0.7721	-0.2331	-12.1922
392	1	Extremo 1A	20.114	-19.138	0.0037	-0.7721	-0.2349	-0.0052
392	0	Extremo 2A	20.114	-40.082	0.0037	-0.7721	-0.2312	-29.6152
392	0.5	Extremo 2A	20.114	-29.61	0.0037	-0.7721	-0.2331	-12.1922
392	1	Extremo 2A	20.114	-19.138	0.0037	-0.7721	-0.2349	-0.0052
393	0	Extremo 1A	20.116	-35.329	0.00284	0.9264	-0.2317	-10.9439
393	0.5	Extremo 1A	20.116	-24.857	0.00284	0.9264	-0.2332	4.1024
393	1	Extremo 1A	20.116	-14.385	0.00284	0.9264	-0.2346	13.9128
393	0	Extremo 2A	20.116	-35.329	0.00284	0.9264	-0.2317	-10.944
393	0.5	Extremo 2A	20.116	-24.857	0.00284	0.9264	-0.2332	4.1024
393	1	Extremo 2A	20.116	-14.385	0.00284	0.9264	-0.2346	13.9128
394	0	Extremo 1A	20.117	-29.278	0.00218	1.2822	-0.2321	4.0611
394	0.5	Extremo 1A	20.117	-18.806	0.00218	1.2822	-0.2332	16.082
394	1	Extremo 1A	20.117	-8.334	0.00218	1.2822	-0.2343	22.867
394	0	Extremo 2A	20.117	-29.278	0.00218	1.2822	-0.2321	4.0611
394	0.5	Extremo 2A	20.117	-18.806	0.00218	1.2822	-0.2332	16.0821
394	1	Extremo 2A	20.117	-8.334	0.00218	1.2822	-0.2343	22.867
395	0	Extremo 1A	20.118	-23.087	0.00168	1.0173	-0.2324	15.5239
395	0.5	Extremo 1A	20.118	-12.616	0.00168	1.0173	-0.2333	24.4496
395	1	Extremo 1A	20.118	-2.144	0.00168	1.0173	-0.2341	28.1394
395	0	Extremo 2A	20.118	-23.087	0.00168	1.0173	-0.2324	15.5239
395	0.5	Extremo 2A	20.118	-12.616	0.00168	1.0173	-0.2333	24.4496
395	1	Extremo 2A	20.118	-2.144	0.00168	1.0173	-0.2341	28.1394
396	0	Extremo 1A	20.119	-16.961	0.00129	0.5416	-0.2327	23.6502
396	0.5	Extremo 1A	20.119	-6.49	0.00129	0.5416	-0.2333	29.5129
396	1	Extremo 1A	20.119	3.982	0.00129	0.5416	-0.2339	30.1397
396	0	Extremo 2A	20.119	-16.961	0.00129	0.5416	-0.2327	23.6502
396	0.5	Extremo 2A	20.119	-6.49	0.00129	0.5416	-0.2333	29.513
396	1	Extremo 2A	20.119	3.982	0.00129	0.5416	-0.2339	30.1398
397	0	Extremo 1A	20.119	-10.885	0.00099	0.0108	-0.2328	28.5442
397	0.5	Extremo 1A	20.119	-0.413	0.00099	0.0108	-0.2333	31.3689
397	1	Extremo 1A	20.119	10.059	0.00099	0.0108	-0.2338	28.9576
397	0	Extremo 2A	20.119	-10.885	0.00099	0.0108	-0.2328	28.5443
397	0.5	Extremo 2A	20.119	-0.413	0.00099	0.0108	-0.2333	31.369
397	1	Extremo 2A	20.119	10.059	0.00099	0.0108	-0.2338	28.9577
398	0	Extremo 1A	20.12	-4.811	0.00077	-0.5195	-0.233	30.2497
398	0.5	Extremo 1A	20.12	5.661	0.00077	-0.5195	-0.2334	30.0373
398	1	Extremo 1A	20.12	16.133	0.00077	-0.5195	-0.2337	24.5889
398	0	Extremo 2A	20.12	-4.811	0.00077	-0.5195	-0.233	30.2498
398	0.5	Extremo 2A	20.12	5.661	0.00077	-0.5195	-0.2334	30.0374
398	1	Extremo 2A	20.12	16.133	0.00077	-0.5195	-0.2337	24.589
399	0	Extremo 1A	20.12	1.308	0.00059	-0.9947	-0.2331	28.7704
399	0.5	Extremo 1A	20.12	11.78	0.00059	-0.9947	-0.2334	25.4984
399	1	Extremo 1A	20.12	22.252	0.00059	-0.9947	-0.2337	16.9905
399	0	Extremo 2A	20.12	1.308	0.00059	-0.9947	-0.2331	28.7705
399	0.5	Extremo 2A	20.12	11.78	0.00059	-0.9947	-0.2334	25.4985
399	1	Extremo 2A	20.12	22.252	0.00059	-0.9947	-0.2337	16.9906
400	0	Extremo 1A	20.12	7.486	0.00046	-1.2632	-0.2332	24.0181
400	0.5	Extremo 1A	20.12	17.958	0.00046	-1.2632	-0.2334	17.6573
400	1	Extremo 1A	20.12	28.43	0.00046	-1.2632	-0.2336	6.0604
400	0	Extremo 2A	20.12	7.486	0.00046	-1.2632	-0.2332	24.0183
400	0.5	Extremo 2A	20.12	17.958	0.00046	-1.2632	-0.2334	17.6574
400	1	Extremo 2A	20.12	28.43	0.00046	-1.2632	-0.2336	6.0606
401	0	Extremo 1A	20.12	13.523	0.00035	-0.9268	-0.2332	15.5936
401	0.5	Extremo 1A	20.12	23.995	0.00035	-0.9268	-0.2334	6.214
401	1	Extremo 1A	20.12	34.467	0.00035	-0.9268	-0.2336	-8.4016
401	0	Extremo 2A	20.12	13.523	0.00035	-0.9268	-0.2332	15.5937
401	0.5	Extremo 2A	20.12	23.995	0.00035	-0.9268	-0.2334	6.2141
401	1	Extremo 2A	20.12	34.467	0.00035	-0.9268	-0.2336	-8.4014
402	0	Extremo 1A	20.121	18.296	0.00027	0.715	-0.2333	2.2509
402	0.5	Extremo 1A	20.121	28.767	0.00027	0.715	-0.2334	-9.5149
402	1	Extremo 1A	20.121	39.239	0.00027	0.715	-0.2335	-26.5166
402	0	Extremo 2A	20.121	18.296	0.00027	0.715	-0.2333	2.2511
402	0.5	Extremo 2A	20.121	28.767	0.00027	0.715	-0.2334	-9.5147
402	1	Extremo 2A	20.121	39.239	0.00027	0.715	-0.2335	-26.5164
403	0	Extremo 1A	20.121	17.667	0.00021	3.7357	-0.2333	-18.5217
403	0.5	Extremo 1A	20.121	28.139	0.00021	3.7357	-0.2334	-29.9733
403	1	Extremo 1A	20.121	38.611	0.00021	3.7357	-0.2335	-46.6608
403	0	Extremo 2A	20.121	17.667	0.00021	3.7357	-0.2333	-18.5215
403	0.5	Extremo 2A	20.121	28.139	0.00021	3.7357	-0.2334	-29.9731
403	1	Extremo 2A	20.121	38.611	0.00021	3.7357	-0.2335	-46.6606
404	0	Extremo 1A	20.121	2.314	0.00016	4.1785	-0.2333	-46.5009
404	0.5	Extremo 1A	20.121	12.786	0.00016	4.1785	-0.2334	-50.276
404	1	Extremo 1A	20.121	23.258	0.00016	4.1785	-0.2335	-59.2871
404	0	Extremo 2A	20.121	2.314	0.00016	4.1784	-0.2333	-46.5006
404	0.5	Extremo 2A	20.121	12.786	0.00016	4.1784	-0.2334	-50.2758
404	1	Extremo 2A	20.121	23.258	0.00016	4.1784	-0.2335	-59.2869
405	0	Extremo 1A	20.121	-23.559	0.00013	-4.1723	-0.2333	-59.3408
405	0.5	Extremo 1A	20.121	-13.087	0.00013	-4.1723	-0.2334	-50.1792
405	1	Extremo 1A	20.121	-2.615	0.00013	-4.1723	-0.2335	-46.2535
405	0	Extremo 2A	20.121	-23.559	0.00013	-4.1723	-0.2333	-59.3406

405	0.5	Extremo 2A	20.121	-13.087	0.00013	-4.1723	-0.2334	-50.179
405	1	Extremo 2A	20.121	-2.615	0.00013	-4.1723	-0.2335	-46.2533
406	0	Extremo 1A	20.121	-38.912	9.8E-05	-3.7296	-0.2334	-46.5208
406	0.5	Extremo 1A	20.121	-28.44	9.8E-05	-3.7296	-0.2334	-29.6827
406	1	Extremo 1A	20.121	-17.968	9.8E-05	-3.7296	-0.2335	-18.0806
406	0	Extremo 2A	20.121	-38.912	9.8E-05	-3.7296	-0.2334	-46.5206
406	0.5	Extremo 2A	20.121	-28.44	9.8E-05	-3.7296	-0.2334	-29.6826
406	1	Extremo 2A	20.121	-17.968	9.8E-05	-3.7296	-0.2335	-18.0805
407	0	Extremo 1A	20.121	-39.541	7.6E-05	-0.7088	-0.2334	-26.1829
407	0.5	Extremo 1A	20.121	-29.069	7.6E-05	-0.7088	-0.2334	-9.0306
407	1	Extremo 1A	20.121	-18.597	7.6E-05	-0.7088	-0.2335	2.8858
407	0	Extremo 2A	20.121	-39.541	7.6E-05	-0.7088	-0.2334	-26.1828
407	0.5	Extremo 2A	20.121	-29.069	7.6E-05	-0.7088	-0.2334	-9.0305
407	1	Extremo 2A	20.121	-18.597	7.6E-05	-0.7088	-0.2335	2.8858
408	0	Extremo 1A	20.121	-34.769	5.9E-05	0.9332	-0.2334	-7.8743
408	0.5	Extremo 1A	20.121	-24.297	5.9E-05	0.9332	-0.2334	6.892
408	1	Extremo 1A	20.121	-13.825	5.9E-05	0.9332	-0.2334	16.4223
408	0	Extremo 2A	20.121	-34.768	5.9E-05	0.9332	-0.2334	-7.8743
408	0.5	Extremo 2A	20.121	-24.297	5.9E-05	0.9332	-0.2334	6.8919
408	1	Extremo 2A	20.121	-13.825	5.9E-05	0.9332	-0.2334	16.4222
409	0	Extremo 1A	20.121	-28.731	4.6E-05	1.2698	-0.2334	6.7812
409	0.5	Extremo 1A	20.121	-18.26	4.6E-05	1.2698	-0.2334	18.5289
409	1	Extremo 1A	20.121	-7.788	4.6E-05	1.2698	-0.2334	25.0408
409	0	Extremo 2A	20.121	-28.731	4.6E-05	1.2698	-0.2334	6.7811
409	0.5	Extremo 2A	20.121	-18.259	4.6E-05	1.2698	-0.2334	18.5289
409	1	Extremo 2A	20.121	-7.788	4.6E-05	1.2698	-0.2334	25.0406
410	0	Extremo 1A	20.121	-22.554	3.6E-05	1.0016	-0.2334	17.9045
410	0.5	Extremo 1A	20.121	-12.082	3.6E-05	1.0016	-0.2334	26.5637
410	1	Extremo 1A	20.121	-1.611	3.6E-05	1.0016	-0.2334	29.987
410	0	Extremo 2A	20.121	-22.554	3.6E-05	1.0016	-0.2334	17.9044
410	0.5	Extremo 2A	20.121	-12.082	3.6E-05	1.0016	-0.2334	26.5636
410	1	Extremo 2A	20.121	-1.61	3.6E-05	1.0016	-0.2334	29.9867
411	0	Extremo 1A	20.121	-16.436	2.8E-05	0.527	-0.2334	25.696
411	0.5	Extremo 1A	20.121	-5.964	2.8E-05	0.527	-0.2334	31.2962
411	1	Extremo 1A	20.121	4.507	2.8E-05	0.527	-0.2334	31.6604
411	0	Extremo 2A	20.121	-16.436	2.8E-05	0.527	-0.2334	25.6958
411	0.5	Extremo 2A	20.121	-5.964	2.8E-05	0.527	-0.2334	31.2959
411	1	Extremo 2A	20.121	4.508	2.8E-05	0.527	-0.2334	31.6601
412	0	Extremo 1A	20.121	-10.364	2.2E-05	-0.0025	-0.2334	30.2571
412	0.5	Extremo 1A	20.121	0.108	2.2E-05	-0.0025	-0.2334	32.8212
412	1	Extremo 1A	20.121	10.58	2.2E-05	-0.0025	-0.2334	30.1493
412	0	Extremo 2A	20.121	-10.364	2.2E-05	-0.0025	-0.2334	30.2568
412	0.5	Extremo 2A	20.121	0.108	2.2E-05	-0.0025	-0.2334	32.8209
412	1	Extremo 2A	20.121	10.58	2.2E-05	-0.0025	-0.2334	30.149
413	0	Extremo 1A	20.121	-4.291	1.7E-05	-0.5322	-0.2334	31.6307
413	0.5	Extremo 1A	20.121	6.181	1.7E-05	-0.5322	-0.2334	31.1584
413	1	Extremo 1A	20.121	16.652	1.7E-05	-0.5322	-0.2334	25.4502
413	0	Extremo 2A	20.121	-4.291	1.7E-05	-0.5322	-0.2334	31.6304
413	0.5	Extremo 2A	20.121	6.181	1.7E-05	-0.5322	-0.2334	31.1581
413	1	Extremo 2A	20.121	16.653	1.7E-05	-0.5322	-0.2334	25.4498
414	0	Extremo 1A	20.121	1.829	1.3E-05	-1.0072	-0.2334	29.8206
414	0.5	Extremo 1A	20.121	12.3	1.3E-05	-1.0072	-0.2334	26.2883
414	1	Extremo 1A	20.121	22.772	1.3E-05	-1.0072	-0.2334	17.5201
414	0	Extremo 2A	20.121	1.829	1.3E-05	-1.0072	-0.2334	29.8202
414	0.5	Extremo 2A	20.121	12.301	1.3E-05	-1.0072	-0.2334	26.2878
414	1	Extremo 2A	20.121	22.772	1.3E-05	-1.0072	-0.2334	17.5196
415	0	Extremo 1A	20.121	8.009	1E-05	-1.2747	-0.2334	24.7381
415	0.5	Extremo 1A	20.121	18.481	1E-05	-1.2747	-0.2334	18.1155
415	1	Extremo 1A	20.121	28.953	1E-05	-1.2747	-0.2334	6.2568
415	0	Extremo 2A	20.121	8.01	1E-05	-1.2747	-0.2334	24.7377
415	0.5	Extremo 2A	20.121	18.481	1E-05	-1.2747	-0.2334	18.1149
415	1	Extremo 2A	20.121	28.953	1E-05	-1.2747	-0.2334	6.2563
416	0	Extremo 1A	20.121	14.051	7.9E-06	-0.9336	-0.2334	15.9814
416	0.5	Extremo 1A	20.121	24.523	7.9E-06	-0.9336	-0.2334	6.3381
416	1	Extremo 1A	20.121	34.994	7.9E-06	-0.9336	-0.2334	-8.5411
416	0	Extremo 2A	20.121	14.051	7.9E-06	-0.9336	-0.2334	15.9809
416	0.5	Extremo 2A	20.121	24.523	7.9E-06	-0.9336	-0.2334	6.3375
416	1	Extremo 2A	20.121	34.995	7.9E-06	-0.9336	-0.2334	-8.5418
417	0	Extremo 1A	20.121	18.819	6.2E-06	0.7221	-0.2334	2.2956
417	0.5	Extremo 1A	20.121	29.291	6.2E-06	0.7221	-0.2334	-9.7319
417	1	Extremo 1A	20.121	39.763	6.2E-06	0.7221	-0.2334	-26.9953
417	0	Extremo 2A	20.121	18.819	6.2E-06	0.7221	-0.2334	2.295
417	0.5	Extremo 2A	20.121	29.291	6.2E-06	0.7221	-0.2334	-9.7326
417	1	Extremo 2A	20.121	39.763	6.2E-06	0.7221	-0.2334	-26.9961
418	0	Extremo 1A	20.121	18.145	4.8E-06	3.7666	-0.2334	-18.851
418	0.5	Extremo 1A	20.121	28.617	4.8E-06	3.7666	-0.2334	-30.5417
418	1	Extremo 1A	20.121	39.089	4.8E-06	3.7666	-0.2334	-47.4683
418	0	Extremo 2A	20.121	18.145	4.8E-06	3.7667	-0.2334	-18.8517
418	0.5	Extremo 2A	20.121	28.617	4.8E-06	3.7667	-0.2334	-30.5424
418	1	Extremo 2A	20.121	39.089	4.8E-06	3.7667	-0.2334	-47.4691
419	0	Extremo 1A	20.121	2.629	3.8E-06	4.2107	-0.2334	-47.2327
419	0.5	Extremo 1A	20.121	13.101	3.8E-06	4.2107	-0.2334	-51.1651
419	1	Extremo 1A	20.121	23.573	3.8E-06	4.2107	-0.2334	-60.3334
419	0	Extremo 2A	20.121	2.629	3.8E-06	4.2107	-0.2334	-47.2335
419	0.5	Extremo 2A	20.121	13.101	3.8E-06	4.2107	-0.2334	-51.1659
419	1	Extremo 2A	20.121	23.573	3.8E-06	4.2107	-0.2334	-60.3342
420	0	Extremo 1A	20.121	-23.494	2.9E-06	-4.2119	-0.2334	-60.3197
420	0.5	Extremo 1A	20.121	-13.022	2.9E-06	-4.2119	-0.2334	-51.1907
420	1	Extremo 1A	20.121	-2.55	2.9E-06	-4.2119	-0.2334	-47.2976
420	0	Extremo 2A	20.121	-23.494	2.9E-06	-4.2119	-0.2334	-60.3206
420	0.5	Extremo 2A	20.121	-13.022	2.9E-06	-4.2119	-0.2334	-51.1914
420	1	Extremo 2A	20.121	-2.55	2.9E-06	-4.2119	-0.2334	-47.2982
421	0	Extremo 1A	20.121	-39.01	2.3E-06	-3.7678	-0.2334	-47.5059
421	0.5	Extremo 1A	20.121	-28.539	2.3E-06	-3.7678	-0.2334	-30.6186
421	1	Extremo 1A	20.121	-18.067	2.3E-06	-3.7678	-0.2334	-18.9673
421	0	Extremo 2A	20.121	-39.011	2.3E-06	-3.7679	-0.2334	-47.5065
421	0.5	Extremo 2A	20.121	-28.539	2.3E-06	-3.7679	-0.2334	-30.6191
421	1	Extremo 2A	20.121	-18.067	2.3E-06	-3.7679	-0.2334	-18.9676
422	0	Extremo 1A	20.121	-39.684	1.8E-06	-0.7233	-0.2334	-27.0842
422	0.5	Extremo 1A	20.121	-29.212	1.8E-06	-0.7233	-0.2334	-9.8602
422	1	Extremo 1A	20.121	-18.74	1.8E-06	-0.7233	-0.2334	2.128
422	0	Extremo 2A	20.121	-39.684	1.8E-06	-0.7234	-0.2334	-27.0846
422	0.5	Extremo 2A	20.121	-29.213	1.8E-06	-0.7234	-0.2334	-9.8603
422	1	Extremo 2A	20.121	-18.741	1.8E-06	-0.7234	-0.2334	2.128
423	0	Extremo 1A	20.121	-34.916	1.4E-06	0.9324	-0.2334	-8.6812
423	0.5	Extremo 1A	20.121	-24.444	1.4E-06	0.9324	-0.2334	6.1586
423	1	Extremo 1A	20.121	-13.972	1.4E-06	0.9324	-0.2334	15.7625
423	0	Extremo 2A	20.121	-34.916	1.4E-06	0.9324	-0.2334	-8.6813
423	0.5	Extremo 2A	20.121	-24.444	1.4E-06	0.9324	-0.2334	6.1587
423	1	Extremo 2A	20.121	-13.972	1.4E-06	0.9324	-0.2334	15.7628
424	0	Extremo 1A	20.121	-28.874	1.1E-06	1.2734	-0.2334	6.0655
424	0.5	Extremo 1A	20.121	-18.402	1.1E-06	1.2734	-0.2334	17.8847
424	1	Extremo 1A	20.121	-7.93	1.1E-06	1.2734	-0.2334	24.4679
424	0	Extremo 2A	20.121	-28.875	1.1E-06	1.2734	-0.2334	6.0657
424	0.5	Extremo 2A	20.121	-18.403	1.1E-06	1.2734	-0.2334	17.885
424	1	Extremo 2A	20.121	-7.931	1.1E-06	1.2734	-0.2334	24.4684
425	0	Extremo 1A	20.121	-22.693	8.6E-07	1.0057	-0.2334	17.2776
425	0.5	Extremo 1A	20.121	-12.221	8.6E-07	1.0057	-0.2334	26.0062
425	1	Extremo 1A	20.121	-1.749	8.6E-07	1.0057	-0.2334	29.4989
425	0	Extremo 2A	20.121	-22.694	8.6E-07	1.0057	-0.2334	17.278
425	0.5	Extremo 2A	20.121	-12.222	8.6E-07	1.0057	-0.2334	26.0069
425	1	Extremo 2A	20.121	-1.75	8.6E-07	1.0057	-0.2334	29.4998
426	0	Extremo 1A	20.121	-16.573	6.7E-07	0.5306	-0.2334	25.1566
426	0.5	Extremo 1A	20.121	-6.101	6.7E-07	0.5306	-0.2334	30.8251
426	1	Extremo 1A	20.121	4.371	6.7E-07	0.5306	-0.2334	31.2577
426	0	Extremo 2A	20.121	-16.573	6.7E-07	0.5306	-0.2334	25.1573
426	0.5	Extremo 2A	20.121	-6.102	6.7E-07	0.5306	-0.2334	30.826
426	1	Extremo 2A	20.121	4.37	6.7E-07	0.5306	-0.2334	31.2588
427	0	Extremo 1A	20.121	-10.5	5.2E-07	0.00064	-0.2334	29.8049
427	0.5	Extremo 1A	20.121	-0.028	5.2E-07	0.00064	-0.2334	32.4367
427	1	Extremo 1A	20.121	10.444	5.2E-07	0.00064	-0.2334	29.8326
427	0	Extremo 2A	20.121	-10.5	5.2E-07	0.00065	-0.2334	29.8058
427	0.5	Extremo 2A	20.121	-0.028	5.2E-07	0.00065	-0.2334	32.4379
427	1	Extremo 2A	20.121	10.444	5.2E-07	0.00065	-0.2334	29.834
428	0	Extremo 1A	20.121	-4.426	4.1E-07	-0.5292	-0.2334	31.2654
428	0.5	Extremo 1A	20.121	6.045	4.1E-07	-0.5292	-0.2334	30.8607
428	1	Extremo 1A	20.121	16.517	4.1E-07	-0.5292	-0.2334	25.22
428	0	Extremo 2A	20.121	-4.427	4.1E-07	-0.5292	-0.2334	31.2666
428	0.5	Extremo 2A	20.121	6.045	4.1E-07	-0.5292	-0.2334	30.8621
428	1	Extremo 2A	20.121	16.517	4.1E-07	-0.5292	-0.2334	25.2216
429	0	Extremo 1A	20.121	1.693	3.2E-07	-1.0043	-0.2334	29.5419
429	0.5	Extremo 1A	20.121	12.165	3.2E-07	-1.0043	-0.2334	26.0773
429	1	Extremo 1A	20.121	22.637	3.2E-07	-1.0043	-0.2334	17.3767
429	0	Extremo 2A	20.121	1.693	3.2E-07	-1.0043	-0.2334	29.5434

429	0.5	Extremo 2A	20.121	12.165	3.2E-07	-1.0043	-0.2334	26.079
429	1	Extremo 2A	20.121	22.637	3.2E-07	-1.0043	-0.2334	17.3786
430	0	Extremo 1A	20.121	7.873	2.5E-07	-1.2721	-0.2334	24.546
430	0.5	Extremo 1A	20.121	18.345	2.5E-07	-1.2721	-0.2334	17.9913
430	1	Extremo 1A	20.121	28.817	2.5E-07	-1.2721	-0.2334	6.2007
430	0	Extremo 2A	20.121	7.873	2.5E-07	-1.2721	-0.2334	24.5477
430	0.5	Extremo 2A	20.121	18.345	2.5E-07	-1.2721	-0.2334	17.9933
430	1	Extremo 2A	20.121	28.817	2.5E-07	-1.2721	-0.2334	6.2029
431	0	Extremo 1A	20.121	13.914	2E-07	-0.9322	-0.2334	15.8762
431	0.5	Extremo 1A	20.121	24.385	2E-07	-0.9322	-0.2334	6.3014
431	1	Extremo 1A	20.121	34.857	2E-07	-0.9322	-0.2334	-8.5093
431	0	Extremo 2A	20.121	13.913	2E-07	-0.9322	-0.2334	15.8782
431	0.5	Extremo 2A	20.121	24.385	2E-07	-0.9322	-0.2334	6.3037
431	1	Extremo 2A	20.121	34.857	2E-07	-0.9322	-0.2334	-8.5068
432	0	Extremo 1A	20.121	18.683	1.5E-07	0.72	-0.2334	2.2801
432	0.5	Extremo 1A	20.121	29.155	1.5E-07	0.72	-0.2334	-9.6793
432	1	Extremo 1A	20.121	39.627	1.5E-07	0.72	-0.2334	-26.8747
432	0	Extremo 2A	20.121	18.683	1.5E-07	0.7199	-0.2334	2.2824
432	0.5	Extremo 2A	20.121	29.154	1.5E-07	0.7199	-0.2334	-9.6768
432	1	Extremo 2A	20.121	39.626	1.5E-07	0.7199	-0.2334	-26.8719
433	0	Extremo 1A	20.121	18.021	1.2E-07	3.7584	-0.2334	-18.7688
433	0.5	Extremo 1A	20.121	28.493	1.2E-07	3.7584	-0.2334	-30.3972
433	1	Extremo 1A	20.121	38.965	1.2E-07	3.7584	-0.2334	-47.2616
433	0	Extremo 2A	20.121	18.021	1.2E-07	3.7583	-0.2334	-18.7661
433	0.5	Extremo 2A	20.121	28.492	1.2E-07	3.7583	-0.2334	-30.3943
433	1	Extremo 2A	20.121	38.964	1.2E-07	3.7583	-0.2334	-47.2585
434	0	Extremo 1A	20.121	2.546	9.4E-08	4.2022	-0.2334	-47.0455
434	0.5	Extremo 1A	20.121	13.018	9.4E-08	4.2022	-0.2334	-50.9366
434	1	Extremo 1A	20.121	23.49	9.4E-08	4.2022	-0.2334	-60.0637
434	0	Extremo 2A	20.121	2.547	9.4E-08	4.202	-0.2334	-47.0423
434	0.5	Extremo 2A	20.121	13.018	9.4E-08	4.202	-0.2334	-50.9335
434	1	Extremo 2A	20.121	23.49	9.4E-08	4.202	-0.2334	-60.0607
435	0	Extremo 1A	20.121	-23.512	7.4E-08	-4.2018	-0.2334	-60.0676
435	0.5	Extremo 1A	20.121	-13.041	7.4E-08	-4.2018	-0.2334	-50.9294
435	1	Extremo 1A	20.121	-2.569	7.4E-08	-4.2018	-0.2334	-47.0271
435	0	Extremo 2A	20.121	-23.511	7.4E-08	-4.2017	-0.2334	-60.0644
435	0.5	Extremo 2A	20.121	-13.04	7.4E-08	-4.2017	-0.2334	-50.9266
435	1	Extremo 2A	20.121	-2.568	7.4E-08	-4.2017	-0.2334	-47.0248
436	0	Extremo 1A	20.121	-38.987	5.8E-08	-3.7581	-0.2334	-47.2509
436	0.5	Extremo 1A	20.121	-28.515	5.8E-08	-3.7581	-0.2334	-30.3754
436	1	Extremo 1A	20.121	-18.043	5.8E-08	-3.7581	-0.2334	-18.7358
436	0	Extremo 2A	20.121	-38.985	5.8E-08	-3.758	-0.2334	-47.2484
436	0.5	Extremo 2A	20.121	-28.514	5.8E-08	-3.758	-0.2334	-30.3736
436	1	Extremo 2A	20.121	-18.042	5.8E-08	-3.758	-0.2334	-18.7348
437	0	Extremo 1A	20.121	-39.649	4.5E-08	-0.7196	-0.2334	-26.8495
437	0.5	Extremo 1A	20.121	-29.177	4.5E-08	-0.7196	-0.2334	-9.6429
437	1	Extremo 1A	20.121	-18.705	4.5E-08	-0.7196	-0.2334	2.3276
437	0	Extremo 2A	20.121	-39.647	4.5E-08	-0.7196	-0.2334	-26.848
437	0.5	Extremo 2A	20.121	-29.176	4.5E-08	-0.7196	-0.2334	-9.6423
437	1	Extremo 2A	20.121	-18.704	4.5E-08	-0.7196	-0.2334	2.3275
438	0	Extremo 1A	20.121	-34.88	3.6E-08	0.9326	-0.2334	-8.4695
438	0.5	Extremo 1A	20.121	-24.408	3.6E-08	0.9326	-0.2334	6.3524
438	1	Extremo 1A	20.121	-13.936	3.6E-08	0.9326	-0.2334	15.9383
438	0	Extremo 2A	20.121	-34.878	3.5E-08	0.9326	-0.2334	-8.4691
438	0.5	Extremo 2A	20.121	-24.406	3.5E-08	0.9326	-0.2334	6.352
438	1	Extremo 2A	20.121	-13.934	3.5E-08	0.9326	-0.2334	15.9371
439	0	Extremo 1A	20.121	-28.839	2.8E-08	1.2725	-0.2334	6.255
439	0.5	Extremo 1A	20.121	-18.368	2.8E-08	1.2725	-0.2334	18.0568
439	1	Extremo 1A	20.121	-7.896	2.8E-08	1.2725	-0.2334	24.6226
439	0	Extremo 2A	20.121	-28.838	2.7E-08	1.2725	-0.2334	6.2544
439	0.5	Extremo 2A	20.121	-18.366	2.7E-08	1.2725	-0.2334	18.0554
439	1	Extremo 2A	20.121	-7.894	2.7E-08	1.2725	-0.2334	24.6204
440	0	Extremo 1A	20.121	-22.659	2.2E-08	1.0047	-0.2334	17.4455
440	0.5	Extremo 1A	20.121	-12.188	2.2E-08	1.0047	-0.2334	26.1573
440	1	Extremo 1A	20.121	-1.716	2.2E-08	1.0047	-0.2334	29.6331
440	0	Extremo 2A	20.121	-22.658	2.1E-08	1.0047	-0.2334	17.4439
440	0.5	Extremo 2A	20.121	-12.186	2.1E-08	1.0047	-0.2334	26.1549
440	1	Extremo 2A	20.121	-1.714	2.1E-08	1.0047	-0.2334	29.6299
441	0	Extremo 1A	20.121	-16.54	1.7E-08	0.5297	-0.2334	25.3033
441	0.5	Extremo 1A	20.121	-6.068	1.7E-08	0.5297	-0.2334	30.9552
441	1	Extremo 1A	20.121	4.404	1.7E-08	0.5297	-0.2334	31.3712
441	0	Extremo 2A	20.121	-16.538	1.6E-08	0.5296	-0.2334	25.3006
441	0.5	Extremo 2A	20.121	-6.066	1.6E-08	0.5296	-0.2334	30.9518
441	1	Extremo 2A	20.121	4.406	1.6E-08	0.5296	-0.2334	31.367
442	0	Extremo 1A	20.121	-10.467	1.3E-08	-0.00012	-0.2334	29.9304
442	0.5	Extremo 1A	20.121	0.00512	1.3E-08	-0.00012	-0.2334	32.5458
442	1	Extremo 1A	20.121	10.477	1.3E-08	-0.00012	-0.2334	29.9252
442	0	Extremo 2A	20.121	-10.465	1.2E-08	-0.00015	-0.2334	29.9267
442	0.5	Extremo 2A	20.121	0.0067	1.2E-08	-0.00015	-0.2334	32.5413
442	1	Extremo 2A	20.121	10.479	1.2E-08	-0.00015	-0.2334	29.92
443	0	Extremo 1A	20.121	-4.394	1E-08	-0.5299	-0.2334	31.3698
443	0.5	Extremo 1A	20.121	6.078	1E-08	-0.5299	-0.2334	30.9487
443	1	Extremo 1A	20.121	16.55	1E-08	-0.5299	-0.2334	25.2916
443	0	Extremo 2A	20.121	-4.392	8.4E-09	-0.53	-0.2334	31.3651
443	0.5	Extremo 2A	20.121	6.08	8.4E-09	-0.53	-0.2334	30.9432
443	1	Extremo 2A	20.121	16.552	8.4E-09	-0.53	-0.2334	25.2853
444	0	Extremo 1A	20.121	1.726	8.1E-09	-1.005	-0.2334	29.6252
444	0.5	Extremo 1A	20.121	12.198	8.1E-09	-1.005	-0.2334	26.1442
444	1	Extremo 1A	20.121	22.67	8.1E-09	-1.005	-0.2334	17.4272
444	0	Extremo 2A	20.121	1.728	5.5E-09	-1.005	-0.2334	29.6195
444	0.5	Extremo 2A	20.121	12.2	5.5E-09	-1.005	-0.2334	26.1377
444	1	Extremo 2A	20.121	22.671	5.5E-09	-1.005	-0.2334	17.42
445	0	Extremo 1A	20.121	7.906	6.3E-09	-1.2727	-0.2334	24.6082
445	0.5	Extremo 1A	20.121	18.378	6.3E-09	-1.2727	-0.2334	18.0371
445	1	Extremo 1A	20.121	28.85	6.3E-09	-1.2727	-0.2334	6.2301
445	0	Extremo 2A	20.121	7.908	3E-09	-1.2728	-0.2334	24.6015
445	0.5	Extremo 2A	20.121	18.38	3E-09	-1.2728	-0.2334	18.0296
445	1	Extremo 2A	20.121	28.852	3E-09	-1.2728	-0.2334	6.2218
446	0	Extremo 1A	20.121	13.947	4.8E-09	-0.9326	-0.2334	15.9173
446	0.5	Extremo 1A	20.121	24.419	4.8E-09	-0.9326	-0.2334	6.326
446	1	Extremo 1A	20.121	34.89	4.8E-09	-0.9326	-0.2334	-8.5012
446	0	Extremo 2A	20.121	13.948	5.3E-10	-0.9326	-0.2334	15.9097
446	0.5	Extremo 2A	20.121	24.42	5.3E-10	-0.9326	-0.2334	6.3175
446	1	Extremo 2A	20.121	34.892	5.3E-10	-0.9326	-0.2334	-8.5106
447	0	Extremo 1A	20.121	18.716	3.5E-09	0.7203	-0.2334	2.2996
447	0.5	Extremo 1A	20.121	29.188	3.5E-09	0.7203	-0.2334	-9.6763
447	1	Extremo 1A	20.121	39.66	3.5E-09	0.7203	-0.2334	-26.8881
447	0	Extremo 2A	20.121	18.717	-1.9E-09	0.7204	-0.2334	2.2908
447	0.5	Extremo 2A	20.121	29.189	-1.9E-09	0.7204	-0.2334	-9.6859
447	1	Extremo 2A	20.121	39.661	-1.9E-09	0.7204	-0.2334	-26.8986
448	0	Extremo 1A	20.121	18.052	2.5E-09	3.7598	-0.2334	-18.7724
448	0.5	Extremo 1A	20.121	28.523	2.5E-09	3.7598	-0.2334	-30.4162
448	1	Extremo 1A	20.121	38.995	2.5E-09	3.7598	-0.2334	-47.2959
448	0	Extremo 2A	20.121	18.053	-4.4E-09	3.7603	-0.2334	-18.7827
448	0.5	Extremo 2A	20.121	28.525	-4.4E-09	3.7603	-0.2334	-30.4271
448	1	Extremo 2A	20.121	38.997	-4.4E-09	3.7603	-0.2334	-47.3074
449	0	Extremo 1A	20.121	2.569	1.5E-09	4.2036	-0.2334	-47.0735
449	0.5	Extremo 1A	20.121	13.041	1.5E-09	4.2036	-0.2334	-50.9762
449	1	Extremo 1A	20.121	23.513	1.5E-09	4.2036	-0.2334	-60.1148
449	0	Extremo 2A	20.121	2.569	-7.2E-09	4.2041	-0.2334	-47.0857
449	0.5	Extremo 2A	20.121	13.041	-7.2E-09	4.2041	-0.2334	-50.988
449	1	Extremo 2A	20.121	23.512	-7.2E-09	4.2041	-0.2334	-60.1262
450	0	Extremo 1A	20.121	-23.501	7E-10	-4.2038	-0.2334	-60.1127
450	0.5	Extremo 1A	20.121	-13.029	7E-10	-4.2038	-0.2334	-50.9801
450	1	Extremo 1A	20.121	-2.557	7E-10	-4.2038	-0.2334	-47.0834
450	0	Extremo 2A	20.121	-23.505	-1E-08	-4.2042	-0.2334	-60.1249
450	0.5	Extremo 2A	20.121	-13.033	-1E-08	-4.2042	-0.2334	-50.9904
450	1	Extremo 2A	20.121	-2.561	-1E-08	-4.2042	-0.2334	-47.0919
451	0	Extremo 1A	20.121	-38.983	-1.1E-10	-3.76	-0.2334	-47.3016
451	0.5	Extremo 1A	20.121	-28.512	-1.1E-10	-3.76	-0.2334	-30.4279
451	1	Extremo 1A	20.121	-18.04	-1.1E-10	-3.76	-0.2334	-18.79
451	0	Extremo 2A	20.121	-38.989	-1.4E-08	-3.7604	-0.2334	-47.311
451	0.5	Extremo 2A	20.121	-28.517	-1.4E-08	-3.7604	-0.2334	-30.4345
451	1	Extremo 2A	20.121	-18.045	-1.4E-08	-3.7604	-0.2334	-18.7939
452	0	Extremo 1A	20.121	-39.648	-9.5E-10	-0.7204	-0.2334	-26.9016
452	0.5	Extremo 1A	20.121	-29.176	-9.5E-10	-0.7204	-0.2334	-9.6957
452	1	Extremo 1A	20.121	-18.704	-9.5E-10	-0.7204	-0.2334	2.2742
452	0	Extremo 2A	20.121	-39.654	-1.9E-08	-0.7205	-0.2334	-26.9071
452	0.5	Extremo 2A	20.121	-29.182	-1.9E-08	-0.7205	-0.2334	-9.6982
452	1	Extremo 2A	20.121	-18.71	-1.9E-08	-0.7205	-0.2334	2.2747
453	0	Extremo 1A	20.121	-34.878	-1.9E-09	0.9324	-0.2334	-8.5225
453	0.5	Extremo 1A	20.121	-24.407	-1.9E-09	0.9324	-0.2334	6.2988
453	1	Extremo 1A	20.121	-13.935	-1.9E-09	0.9324	-0.2334	15.8842
453	0	Extremo 2A	20.121	-34.885	-2.5E-08	0.9325	-0.2334	-8.5241

453	0.5	Extremo 2A	20.121	-24.413	-2.5E-08	0.9325	-0.2334	6.3003
453	1	Extremo 2A	20.121	-13.941	-2.5E-08	0.9325	-0.2334	15.8886
454	0	Extremo 1A	20.121	-28.838	-2.9E-09	1.2725	-0.2334	6.2011
454	0.5	Extremo 1A	20.121	-18.366	-2.9E-09	1.2725	-0.2334	18.0021
454	1	Extremo 1A	20.121	-7.894	-2.9E-09	1.2725	-0.2334	24.5672
454	0	Extremo 2A	20.121	-28.844	-3.3E-08	1.2726	-0.2334	6.2034
454	0.5	Extremo 2A	20.121	-18.372	-3.3E-08	1.2726	-0.2334	18.0074
454	1	Extremo 2A	20.121	-7.9	-3.3E-08	1.2726	-0.2334	24.5756
455	0	Extremo 1A	20.121	-22.658	-4.1E-09	1.0048	-0.2334	17.3905
455	0.5	Extremo 1A	20.121	-12.186	-4.1E-09	1.0048	-0.2334	26.1014
455	1	Extremo 1A	20.121	-1.714	-4.1E-09	1.0048	-0.2334	29.5764
455	0	Extremo 2A	20.121	-22.664	-4.2E-08	1.0049	-0.2334	17.3966
455	0.5	Extremo 2A	20.121	-12.192	-4.2E-08	1.0049	-0.2334	26.1106
455	1	Extremo 2A	20.121	-1.72	-4.2E-08	1.0049	-0.2334	29.5886
456	0	Extremo 1A	20.121	-16.538	-5.6E-09	0.5297	-0.2334	25.2471
456	0.5	Extremo 1A	20.121	-6.066	-5.6E-09	0.5297	-0.2334	30.8981
456	1	Extremo 1A	20.121	4.406	-5.6E-09	0.5297	-0.2334	31.3132
456	0	Extremo 2A	20.121	-16.544	-5.4E-08	0.5298	-0.2334	25.2571
456	0.5	Extremo 2A	20.121	-6.072	-5.4E-08	0.5298	-0.2334	30.9112
456	1	Extremo 2A	20.121	4.4	-5.4E-08	0.5298	-0.2334	31.3293
457	0	Extremo 1A	20.121	-10.465	-7.4E-09	-0.00016	-0.2334	29.873
457	0.5	Extremo 1A	20.121	0.00698	-7.4E-09	-0.00016	-0.2334	32.4875
457	1	Extremo 1A	20.121	10.479	-7.4E-09	-0.00016	-0.2334	29.866
457	0	Extremo 2A	20.121	-10.471	-6.9E-08	-2E-05	-0.2334	29.8869
457	0.5	Extremo 2A	20.121	0.00097	-6.9E-08	-2E-05	-0.2334	32.5044
457	1	Extremo 2A	20.121	10.473	-6.9E-08	-2E-05	-0.2334	29.8859
458	0	Extremo 1A	20.121	-4.392	-9.7E-09	-0.53	-0.2334	31.3113
458	0.5	Extremo 1A	20.121	6.08	-9.7E-09	-0.53	-0.2334	30.8892
458	1	Extremo 1A	20.121	16.552	-9.7E-09	-0.53	-0.2334	25.2311
458	0	Extremo 2A	20.121	-4.398	-8.9E-08	-0.5299	-0.2334	31.329
458	0.5	Extremo 2A	20.121	6.074	-8.9E-08	-0.5299	-0.2334	30.9099
458	1	Extremo 2A	20.121	16.546	-8.9E-08	-0.5299	-0.2334	25.2549
459	0	Extremo 1A	20.121	1.728	-1.3E-08	-1.0051	-0.2334	29.5656
459	0.5	Extremo 1A	20.121	12.2	-1.3E-08	-1.0051	-0.2334	26.0835
459	1	Extremo 1A	20.121	22.672	-1.3E-08	-1.0051	-0.2334	17.3655
459	0	Extremo 2A	20.121	1.722	-1.1E-07	-1.0049	-0.2334	29.5871
459	0.5	Extremo 2A	20.121	12.194	-1.1E-07	-1.0049	-0.2334	26.1081
459	1	Extremo 2A	20.121	22.666	-1.1E-07	-1.0049	-0.2334	17.3932
460	0	Extremo 1A	20.121	7.909	-1.6E-08	-1.2728	-0.2334	24.5476
460	0.5	Extremo 1A	20.121	18.381	-1.6E-08	-1.2728	-0.2334	17.9753
460	1	Extremo 1A	20.121	28.852	-1.6E-08	-1.2728	-0.2334	6.1671
460	0	Extremo 2A	20.121	7.902	-1.5E-07	-1.2727	-0.2334	24.5728
460	0.5	Extremo 2A	20.121	18.374	-1.5E-07	-1.2727	-0.2334	18.0037
460	1	Extremo 2A	20.121	28.846	-1.5E-07	-1.2727	-0.2334	6.1986
461	0	Extremo 1A	20.121	13.949	-2.1E-08	-0.9325	-0.2334	15.8556
461	0.5	Extremo 1A	20.121	24.421	-2.1E-08	-0.9325	-0.2334	6.2629
461	1	Extremo 1A	20.121	34.893	-2.1E-08	-0.9325	-0.2334	-8.5657
461	0	Extremo 2A	20.121	13.943	-1.9E-07	-0.9325	-0.2334	15.8847
461	0.5	Extremo 2A	20.121	24.415	-1.9E-07	-0.9325	-0.2334	6.2953
461	1	Extremo 2A	20.121	34.887	-1.9E-07	-0.9325	-0.2334	-8.5301
462	0	Extremo 1A	20.121	18.718	-2.7E-08	0.7213	-0.2334	2.2359
462	0.5	Extremo 1A	20.121	29.19	-2.7E-08	0.7213	-0.2334	-9.7412
462	1	Extremo 1A	20.121	39.662	-2.7E-08	0.7213	-0.2334	-26.9543
462	0	Extremo 2A	20.121	18.712	-2.4E-07	0.7206	-0.2334	2.2694
462	0.5	Extremo 2A	20.121	29.184	-2.4E-07	0.7206	-0.2334	-9.7046
462	1	Extremo 2A	20.121	39.656	-2.4E-07	0.7206	-0.2334	-26.9145
463	0	Extremo 1A	20.121	18.051	-3.4E-08	3.7624	-0.2334	-18.84
463	0.5	Extremo 1A	20.121	28.523	-3.4E-08	3.7624	-0.2334	-30.4836
463	1	Extremo 1A	20.121	38.995	-3.4E-08	3.7624	-0.2334	-47.3631
463	0	Extremo 2A	20.121	18.047	-3.1E-07	3.7607	-0.2334	-18.8008
463	0.5	Extremo 2A	20.121	28.519	-3.1E-07	3.7607	-0.2334	-30.4422
463	1	Extremo 2A	20.121	38.991	-3.1E-07	3.7607	-0.2334	-47.3195
464	0	Extremo 1A	20.121	2.558	-4.4E-08	4.2062	-0.2334	-47.1468
464	0.5	Extremo 1A	20.121	13.03	-4.4E-08	4.2062	-0.2334	-51.044
464	1	Extremo 1A	20.121	23.502	-4.4E-08	4.2062	-0.2334	-60.1771
464	0	Extremo 2A	20.121	2.561	-3.9E-07	4.2045	-0.2334	-47.1007
464	0.5	Extremo 2A	20.121	13.033	-3.9E-07	4.2045	-0.2334	-50.9993
464	1	Extremo 2A	20.121	23.505	-3.9E-07	4.2045	-0.2334	-60.1338
465	0	Extremo 1A	20.121	-23.528	-5.6E-08	-4.2058	-0.2334	-60.1817
465	0.5	Extremo 1A	20.121	-13.056	-5.6E-08	-4.2058	-0.2334	-51.0355
465	1	Extremo 1A	20.121	-2.585	-5.6E-08	-4.2058	-0.2334	-47.1253
465	0	Extremo 2A	20.121	-23.514	-5E-07	-4.2044	-0.2334	-60.1354
465	0.5	Extremo 2A	20.121	-13.043	-5E-07	-4.2044	-0.2334	-50.9962
465	1	Extremo 2A	20.121	-2.571	-5E-07	-4.2044	-0.2334	-47.0929
466	0	Extremo 1A	20.121	-39.021	-7.2E-08	-3.762	-0.2334	-47.3506
466	0.5	Extremo 1A	20.121	-28.549	-7.2E-08	-3.762	-0.2334	-30.458
466	1	Extremo 1A	20.121	-18.077	-7.2E-08	-3.762	-0.2334	-18.8014
466	0	Extremo 2A	20.121	-39	-6.4E-07	-3.7606	-0.2334	-47.3149
466	0.5	Extremo 2A	20.121	-28.528	-6.4E-07	-3.7606	-0.2334	-30.4329
466	1	Extremo 2A	20.121	-18.056	-6.4E-07	-3.7606	-0.2334	-18.7868
467	0	Extremo 1A	20.121	-39.688	-9.2E-08	-0.7209	-0.2334	-26.9248
467	0.5	Extremo 1A	20.121	-29.216	-9.2E-08	-0.7209	-0.2334	-9.6987
467	1	Extremo 1A	20.121	-18.744	-9.2E-08	-0.7209	-0.2334	2.2915
467	0	Extremo 2A	20.121	-39.665	-8.2E-07	-0.7206	-0.2334	-26.9036
467	0.5	Extremo 2A	20.121	-29.193	-8.2E-07	-0.7206	-0.2334	-9.689
467	1	Extremo 2A	20.121	-18.721	-8.2E-07	-0.7206	-0.2334	2.2896
468	0	Extremo 1A	20.121	-34.919	-1.2E-07	0.9329	-0.2334	-8.5192
468	0.5	Extremo 1A	20.121	-24.447	-1.2E-07	0.9329	-0.2334	6.3225
468	1	Extremo 1A	20.121	-13.976	-1.2E-07	0.9329	-0.2334	15.9282
468	0	Extremo 2A	20.121	-34.896	-1.1E-06	0.9326	-0.2334	-8.513
468	0.5	Extremo 2A	20.121	-24.424	-1.1E-06	0.9326	-0.2334	6.317
468	1	Extremo 2A	20.121	-13.952	-1.1E-06	0.9326	-0.2334	15.9111
469	0	Extremo 1A	20.121	-28.879	-1.5E-07	1.2733	-0.2334	6.2306
469	0.5	Extremo 1A	20.121	-18.407	-1.5E-07	1.2733	-0.2334	18.0519
469	1	Extremo 1A	20.121	-7.935	-1.5E-07	1.2733	-0.2334	24.6373
469	0	Extremo 2A	20.121	-28.855	-1.4E-06	1.2728	-0.2334	6.2219
469	0.5	Extremo 2A	20.121	-18.384	-1.4E-06	1.2728	-0.2334	18.0317
469	1	Extremo 2A	20.121	-7.912	-1.4E-06	1.2728	-0.2334	24.6055
470	0	Extremo 1A	20.121	-22.698	-1.9E-07	1.0056	-0.2334	17.446
470	0.5	Extremo 1A	20.121	-12.226	-1.9E-07	1.0056	-0.2334	26.1771
470	1	Extremo 1A	20.121	-1.754	-1.9E-07	1.0056	-0.2334	29.6723
470	0	Extremo 2A	20.121	-22.675	-1.7E-06	1.005	-0.2334	17.4226
470	0.5	Extremo 2A	20.121	-12.203	-1.7E-06	1.005	-0.2334	26.1423
470	1	Extremo 2A	20.121	-1.731	-1.7E-06	1.005	-0.2334	29.626
471	0	Extremo 1A	20.121	-16.578	-2.5E-07	0.5305	-0.2334	25.3286
471	0.5	Extremo 1A	20.121	-6.106	-2.5E-07	0.5305	-0.2334	30.9998
471	1	Extremo 1A	20.121	4.365	-2.5E-07	0.5305	-0.2334	31.4351
471	0	Extremo 2A	20.121	-16.555	-2.2E-06	0.53	-0.2334	25.2905
471	0.5	Extremo 2A	20.121	-6.084	-2.2E-06	0.53	-0.2334	30.9503
471	1	Extremo 2A	20.121	4.388	-2.2E-06	0.53	-0.2334	31.3741
472	0	Extremo 1A	20.121	-10.505	-3.2E-07	0.00077	-0.2334	29.9803
472	0.5	Extremo 1A	20.121	-0.033	-3.2E-07	0.00077	-0.2334	32.6151
472	1	Extremo 1A	20.121	10.438	-3.2E-07	0.00077	-0.2334	30.0138
472	0	Extremo 2A	20.121	-10.482	-2.9E-06	0.0002	-0.2334	29.9277
472	0.5	Extremo 2A	20.121	-0.011	-2.9E-06	0.0002	-0.2334	32.551
472	1	Extremo 2A	20.121	10.461	-2.9E-06	0.0002	-0.2334	29.9382
473	0	Extremo 1A	20.121	-4.433	-4E-07	-0.5289	-0.2334	31.4443
473	0.5	Extremo 1A	20.121	6.039	-4E-07	-0.5289	-0.2334	31.0426
473	1	Extremo 1A	20.121	16.511	-4E-07	-0.5289	-0.2334	25.405
473	0	Extremo 2A	20.121	-4.409	-3.7E-06	-0.5296	-0.2334	31.3772
473	0.5	Extremo 2A	20.121	6.062	-3.7E-06	-0.5296	-0.2334	30.9639
473	1	Extremo 2A	20.121	16.534	-3.7E-06	-0.5296	-0.2334	25.3147
474	0	Extremo 1A	20.121	1.687	-5.2E-07	-1.0039	-0.2334	29.7241
474	0.5	Extremo 1A	20.121	12.159	-5.2E-07	-1.0039	-0.2334	26.2628
474	1	Extremo 1A	20.121	22.63	-5.2E-07	-1.0039	-0.2334	17.5656
474	0	Extremo 2A	20.121	1.71	-4.7E-06	-1.0046	-0.2334	29.6425
474	0.5	Extremo 2A	20.121	12.182	-4.7E-06	-1.0046	-0.2334	26.1695
474	1	Extremo 2A	20.121	22.654	-4.7E-06	-1.0046	-0.2334	17.4605
475	0	Extremo 1A	20.121	7.866	-6.6E-07	-1.2717	-0.2334	24.7314
475	0.5	Extremo 1A	20.121	18.338	-6.6E-07	-1.2717	-0.2334	18.1805
475	1	Extremo 1A	20.121	28.81	-6.6E-07	-1.2717	-0.2334	6.3936
475	0	Extremo 2A	20.121	7.89	-6.1E-06	-1.2723	-0.2334	24.6355
475	0.5	Extremo 2A	20.121	18.362	-6.1E-06	-1.2723	-0.2334	18.0725
475	1	Extremo 2A	20.121	28.834	-6.1E-06	-1.2723	-0.2334	6.2736
476	0	Extremo 1A	20.121	13.905	-8.5E-07	-0.9327	-0.2334	16.0653
476	0.5	Extremo 1A	20.121	24.377	-8.5E-07	-0.9327	-0.2334	6.4947
476	1	Extremo 1A	20.121	34.849	-8.5E-07	-0.9327	-0.2334	-8.3118
476	0	Extremo 2A	20.121	13.93	-7.8E-06	-0.9325	-0.2334	15.9546
476	0.5	Extremo 2A	20.121	24.402	-7.8E-06	-0.9325	-0.2334	6.3716
476	1	Extremo 2A	20.121	34.874	-7.8E-06	-0.9325	-0.2334	-8.4473
477	0	Extremo 1A	20.121	18.675	-1.1E-06	0.7168	-0.2334	2.4751
477	0.5	Extremo 1A	20.121	29.147	-1.1E-06	0.7168	-0.2334	-9.4805
477	1	Extremo 1A	20.121	39.619	-1.1E-06	0.7168	-0.2334	-26.6721
477	0	Extremo 2A	20.121	18.699	-1E-05	0.7195	-0.2334	2.3476

477	0.5	Extremo 2A	20.121	29.171	-1E-05	0.7195	-0.2334	-9.62
477	1	Extremo 2A	20.121	39.643	-1E-05	0.7195	-0.2334	-26.8236
478	0	Extremo 1A	20.121	18.022	-1.4E-06	3.7505	-0.2334	-18.5619
478	0.5	Extremo 1A	20.121	28.494	-1.4E-06	3.7505	-0.2334	-30.1909
478	1	Extremo 1A	20.121	38.966	-1.4E-06	3.7505	-0.2334	-47.0559
478	0	Extremo 2A	20.121	18.038	-1.3E-05	3.7574	-0.2334	-18.7115
478	0.5	Extremo 2A	20.121	28.51	-1.3E-05	3.7574	-0.2334	-30.3486
478	1	Extremo 2A	20.121	38.982	-1.3E-05	3.7574	-0.2334	-47.2216
479	0	Extremo 1A	20.121	2.58	-1.8E-06	4.1941	-0.2334	-46.821
479	0.5	Extremo 1A	20.121	13.052	-1.8E-06	4.1941	-0.2334	-50.729
479	1	Extremo 1A	20.121	23.524	-1.8E-06	4.1941	-0.2334	-59.8729
479	0	Extremo 2A	20.121	2.568	-1.7E-05	4.2013	-0.2334	-46.9976
479	0.5	Extremo 2A	20.121	13.04	-1.7E-05	4.2013	-0.2334	-50.8996
479	1	Extremo 2A	20.121	23.512	-1.7E-05	4.2013	-0.2334	-60.0376
480	0	Extremo 1A	20.121	-23.429	-2.3E-06	-4.1957	-0.2334	-59.8563
480	0.5	Extremo 1A	20.121	-12.957	-2.3E-06	-4.1957	-0.2334	-50.7596
480	1	Extremo 1A	20.121	-2.486	-2.3E-06	-4.1957	-0.2334	-46.8989
480	0	Extremo 2A	20.121	-23.484	-2.1E-05	-4.2004	-0.2334	-60.0338
480	0.5	Extremo 2A	20.121	-13.012	-2.1E-05	-4.2004	-0.2334	-50.9098
480	1	Extremo 2A	20.121	-2.54	-2.1E-05	-4.2004	-0.2334	-47.0218
481	0	Extremo 1A	20.121	-38.871	-2.9E-06	-3.7522	-0.2334	-47.1006
481	0.5	Extremo 1A	20.121	-28.399	-2.9E-06	-3.7522	-0.2334	-30.2829
481	1	Extremo 1A	20.121	-17.928	-2.9E-06	-3.7522	-0.2334	-18.7012
481	0	Extremo 2A	20.121	-38.954	-2.8E-05	-3.7565	-0.2334	-47.2381
481	0.5	Extremo 2A	20.121	-28.482	-2.8E-05	-3.7565	-0.2334	-30.379
481	1	Extremo 2A	20.121	-18.01	-2.8E-05	-3.7565	-0.2334	-18.756
482	0	Extremo 1A	20.121	-39.524	-3.8E-06	-0.7185	-0.2334	-26.7781
482	0.5	Extremo 1A	20.121	-29.053	-3.8E-06	-0.7185	-0.2334	-9.6339
482	1	Extremo 1A	20.121	-18.581	-3.8E-06	-0.7185	-0.2334	2.2744
482	0	Extremo 2A	20.121	-39.615	-3.6E-05	-0.7187	-0.2334	-26.8603
482	0.5	Extremo 2A	20.121	-29.143	-3.6E-05	-0.7187	-0.2334	-9.6708
482	1	Extremo 2A	20.121	-18.671	-3.6E-05	-0.7187	-0.2334	2.2828
483	0	Extremo 1A	20.121	-34.754	-4.8E-06	0.931	-0.2334	-8.4791
483	0.5	Extremo 1A	20.121	-24.282	-4.8E-06	0.931	-0.2334	6.2801
483	1	Extremo 1A	20.121	-13.811	-4.8E-06	0.931	-0.2334	15.8033
483	0	Extremo 2A	20.121	-34.846	-4.6E-05	0.9333	-0.2334	-8.5044
483	0.5	Extremo 2A	20.121	-24.374	-4.6E-05	0.9333	-0.2334	6.3005
483	1	Extremo 2A	20.121	-13.902	-4.6E-05	0.9333	-0.2334	15.8695
484	0	Extremo 1A	20.121	-28.715	-6.2E-06	1.27	-0.2334	6.1651
484	0.5	Extremo 1A	20.121	-18.243	-6.2E-06	1.27	-0.2334	17.9045
484	1	Extremo 1A	20.121	-7.771	-6.2E-06	1.27	-0.2334	24.408
484	0	Extremo 2A	20.121	-28.806	-5.9E-05	1.2731	-0.2334	6.1963
484	0.5	Extremo 2A	20.121	-18.334	-5.9E-05	1.2731	-0.2334	17.9811
484	1	Extremo 2A	20.121	-7.862	-5.9E-05	1.2731	-0.2334	24.53
485	0	Extremo 1A	20.121	-22.535	-8E-06	1.002	-0.2334	17.2759
485	0.5	Extremo 1A	20.121	-12.063	-8E-06	1.002	-0.2334	25.9256
485	1	Extremo 1A	20.121	-1.592	-8E-06	1.002	-0.2334	29.3393
485	0	Extremo 2A	20.121	-22.626	-7.7E-05	1.0052	-0.2335	17.363
485	0.5	Extremo 2A	20.121	-12.154	-7.7E-05	1.0052	-0.2334	26.0579
485	1	Extremo 2A	20.121	-1.682	-7.7E-05	1.0052	-0.2334	29.5168
486	0	Extremo 1A	20.121	-16.416	-1E-05	0.5268	-0.2334	25.0542
486	0.5	Extremo 1A	20.121	-5.944	-1E-05	0.5268	-0.2334	30.6441
486	1	Extremo 1A	20.121	4.528	-1E-05	0.5268	-0.2334	30.9981
486	0	Extremo 2A	20.121	-16.506	-9.9E-05	0.5301	-0.2335	25.1971
486	0.5	Extremo 2A	20.121	-6.034	-9.9E-05	0.5301	-0.2334	30.8321
486	1	Extremo 2A	20.121	4.438	-9.9E-05	0.5301	-0.2334	31.2312
487	0	Extremo 1A	20.121	-10.342	-1.3E-05	-0.0032	-0.2334	29.6021
487	0.5	Extremo 1A	20.121	0.13	-1.3E-05	-0.0032	-0.2334	32.1553
487	1	Extremo 1A	20.121	10.601	-1.3E-05	-0.0032	-0.2334	29.4726
487	0	Extremo 2A	20.121	-10.433	-0.00013	9E-06	-0.2335	29.8007
487	0.5	Extremo 2A	20.121	0.039	-0.00013	9E-06	-0.2334	32.3991
487	1	Extremo 2A	20.121	10.511	-0.00013	9E-06	-0.2333	29.7614
488	0	Extremo 1A	20.121	-4.268	-1.7E-05	-0.5334	-0.2334	30.9629
488	0.5	Extremo 1A	20.121	6.204	-1.7E-05	-0.5334	-0.2334	30.479
488	1	Extremo 1A	20.121	16.676	-1.7E-05	-0.5334	-0.2334	24.7592
488	0	Extremo 2A	20.121	-4.359	-0.00017	-0.5303	-0.2335	31.2171
488	0.5	Extremo 2A	20.121	6.113	-0.00017	-0.5303	-0.2334	30.7785
488	1	Extremo 2A	20.121	16.585	-0.00017	-0.5303	-0.2333	25.104
489	0	Extremo 1A	20.121	1.854	-2.2E-05	-1.0088	-0.2334	29.1401
489	0.5	Extremo 1A	20.121	12.326	-2.2E-05	-1.0088	-0.2334	25.5953
489	1	Extremo 1A	20.121	22.797	-2.2E-05	-1.0088	-0.2334	16.8146
489	0	Extremo 2A	20.121	1.762	-0.00022	-1.0061	-0.2335	29.45
489	0.5	Extremo 2A	20.121	12.234	-0.00022	-1.0061	-0.2334	25.9509
489	1	Extremo 2A	20.121	22.706	-0.00022	-1.0061	-0.2333	17.2159
490	0	Extremo 1A	20.121	8.037	-2.8E-05	-1.2759	-0.2334	24.0453
490	0.5	Extremo 1A	20.121	18.509	-2.8E-05	-1.2759	-0.2334	17.4087
490	1	Extremo 1A	20.121	28.981	-2.8E-05	-1.2759	-0.2334	5.5361
490	0	Extremo 2A	20.121	7.945	-0.00028	-1.2748	-0.2335	24.4115
490	0.5	Extremo 2A	20.121	18.417	-0.00028	-1.2748	-0.2334	17.8212
490	1	Extremo 2A	20.121	28.888	-0.00028	-1.2748	-0.2333	5.995
491	0	Extremo 1A	20.121	14.082	-3.7E-05	-0.9313	-0.2334	15.2745
491	0.5	Extremo 1A	20.121	24.553	-3.7E-05	-0.9313	-0.2334	5.6157
491	1	Extremo 1A	20.121	35.025	-3.7E-05	-0.9313	-0.2334	-9.279
491	0	Extremo 2A	20.12	13.988	-0.00036	-0.9352	-0.2336	15.6999
491	0.5	Extremo 2A	20.12	24.46	-0.00036	-0.9352	-0.2334	6.0877
491	1	Extremo 2A	20.12	34.932	-0.00036	-0.9352	-0.2332	-8.7604
492	0	Extremo 1A	20.121	18.847	-4.7E-05	0.7352	-0.2334	1.5657
492	0.5	Extremo 1A	20.121	29.318	-4.7E-05	0.7352	-0.2334	-10.4756
492	1	Extremo 1A	20.121	39.79	-4.7E-05	0.7352	-0.2334	-27.7528
492	0	Extremo 2A	20.12	18.76	-0.00047	0.7187	-0.2336	2.0606
492	0.5	Extremo 2A	20.12	29.232	-0.00047	0.7187	-0.2334	-9.9376
492	1	Extremo 2A	20.12	39.704	-0.00047	0.7187	-0.2331	-27.1717
493	0	Extremo 1A	20.121	18.138	-6.1E-05	3.7981	-0.2334	-19.6274
493	0.5	Extremo 1A	20.121	28.61	-6.1E-05	3.7981	-0.2334	-31.3145
493	1	Extremo 1A	20.121	39.082	-6.1E-05	3.7981	-0.2334	-48.2375
493	0	Extremo 2A	20.12	18.09	-0.00061	3.7611	-0.2337	-19.0386
493	0.5	Extremo 2A	20.12	28.562	-0.00061	3.7611	-0.2334	-30.7015
493	1	Extremo 2A	20.12	39.034	-0.00061	3.7611	-0.2331	-47.6003
494	0	Extremo 1A	20.121	2.498	-7.9E-05	4.2438	-0.2335	-48.0775
494	0.5	Extremo 1A	20.121	12.97	-7.9E-05	4.2438	-0.2334	-51.9443
494	1	Extremo 1A	20.121	23.442	-7.9E-05	4.2438	-0.2334	-61.0471
494	0	Extremo 2A	20.12	2.571	-0.0008	4.201	-0.2337	-47.3716
494	0.5	Extremo 2A	20.12	13.043	-0.0008	4.201	-0.2333	-51.2751
494	1	Extremo 2A	20.12	23.515	-0.0008	4.201	-0.2329	-60.4145
495	0	Extremo 1A	20.121	-23.813	-0.0001	-4.2317	-0.2335	-61.1171
495	0.5	Extremo 1A	20.121	-13.342	-0.0001	-4.2317	-0.2334	-51.8283
495	1	Extremo 1A	20.121	-2.87	-0.0001	-4.2317	-0.2334	-47.7755
495	0	Extremo 2A	20.119	-23.558	-0.00104	-4.2301	-0.2338	-60.3981
495	0.5	Extremo 2A	20.119	-13.086	-0.00104	-4.2301	-0.2333	-51.2369
495	1	Extremo 2A	20.119	-2.615	-0.00104	-4.2301	-0.2328	-47.3117
496	0	Extremo 1A	20.121	-39.454	-0.00013	-3.786	-0.2335	-48.0755
496	0.5	Extremo 1A	20.121	-28.982	-0.00013	-3.786	-0.2334	-30.9665
496	1	Extremo 1A	20.121	-18.51	-0.00013	-3.786	-0.2333	-19.0934
496	0	Extremo 2A	20.119	-39.077	-0.00136	-3.7901	-0.234	-47.5077
496	0.5	Extremo 2A	20.119	-28.605	-0.00136	-3.7901	-0.2333	-30.5871
496	1	Extremo 2A	20.119	-18.133	-0.00136	-3.7901	-0.2326	-18.9025
497	0	Extremo 1A	20.121	-40.162	-0.00017	-0.723	-0.2335	-27.3588
497	0.5	Extremo 1A	20.121	-29.691	-0.00017	-0.723	-0.2334	-9.8956
497	1	Extremo 1A	20.121	-19.219	-0.00017	-0.723	-0.2333	2.3317
497	0	Extremo 2A	20.118	-39.748	-0.00177	-0.7476	-0.2341	-27.003
497	0.5	Extremo 2A	20.118	-29.276	-0.00177	-0.7476	-0.2333	-9.7471
497	1	Extremo 2A	20.118	-18.804	-0.00177	-0.7476	-0.2324	2.2729
498	0	Extremo 1A	20.121	-35.398	-0.00022	0.9436	-0.2335	-8.6531
498	0.5	Extremo 1A	20.121	-24.926	-0.00022	0.9436	-0.2334	6.4277
498	1	Extremo 1A	20.121	-14.454	-0.00022	0.9436	-0.2333	16.2727
498	0	Extremo 2A	20.117	-34.976	-0.00231	0.9068	-0.2344	-8.5159
498	0.5	Extremo 2A	20.117	-24.504	-0.00231	0.9068	-0.2332	6.3542
498	1	Extremo 2A	20.117	-14.032	-0.00231	0.9068	-0.232	15.9884
499	0	Extremo 1A	20.121	-29.354	-0.00029	1.2883	-0.2335	6.3938
499	0.5	Extremo 1A	20.121	-18.882	-0.00029	1.2883	-0.2334	18.4527
499	1	Extremo 1A	20.121	-8.41	-0.00029	1.2883	-0.2333	25.2758
499	0	Extremo 2A	20.116	-28.933	-0.00303	1.247	-0.2346	6.3149
499	0.5	Extremo 2A	20.116	-18.461	-0.00303	1.247	-0.2331	18.1634
499	1	Extremo 2A	20.116	-7.989	-0.00303	1.247	-0.2316	24.776
500	0	Extremo 1A	20.12	-23.171	-0.00037	1.0215	-0.2336	17.904
500	0.5	Extremo 1A	20.12	-12.699	-0.00037	1.0215	-0.2334	26.8714
500	1	Extremo 1A	20.12	-2.227	-0.00037	1.0215	-0.2332	30.603
500	0	Extremo 2A	20.114	-22.752	-0.00397	0.9797	-0.235	17.6104
500	0.5	Extremo 2A	20.114	-12.28	-0.00397	0.9797	-0.233	26.3683
500	1	Extremo 2A	20.114	-1.808	-0.00397	0.9797	-0.231	29.8903
501	0	Extremo 1A	20.12	-17.05	-0.00048	0.5464	-0.2336	26.0802
501	0.5	Extremo 1A	20.12	-6.578	-0.00048	0.5464	-0.2334	31.9872
501	1	Extremo 1A	20.12	3.894	-0.00048	0.5464	-0.2331	32.6583
501	0	Extremo 2A	20.112	-16.633	-0.0052	0.5064	-0.2355	25.5714

501	0.5	Extremo 2A	20.112	-6.161	-0.0052	0.5064	-0.2329	31.27
501	1	Extremo 2A	20.112	4.311	-0.0052	0.5064	-0.2303	31.7325
502	0	Extremo 1A	20.12	-10.978	-0.00063	0.0165	-0.2337	31.025
502	0.5	Extremo 1A	20.12	-0.506	-0.00063	0.0165	-0.2334	33.8958
502	1	Extremo 1A	20.12	9.966	-0.00063	0.0165	-0.2331	31.5307
502	0	Extremo 2A	20.11	-10.564	-0.00683	-0.0194	-0.2362	30.2987
502	0.5	Extremo 2A	20.11	-0.092	-0.00683	-0.0194	-0.2327	32.9625
502	1	Extremo 2A	20.11	10.38	-0.00683	-0.0194	-0.2293	30.3904
503	0	Extremo 1A	20.12	-4.907	-0.00082	-0.5133	-0.2338	32.7815
503	0.5	Extremo 1A	20.12	5.565	-0.00082	-0.5133	-0.2333	32.6171
503	1	Extremo 1A	20.12	16.036	-0.00082	-0.5133	-0.2329	27.2169
503	0	Extremo 2A	20.106	-4.498	-0.00897	-0.5411	-0.237	31.8326
503	0.5	Extremo 2A	20.106	5.974	-0.00897	-0.5411	-0.2325	31.4638
503	1	Extremo 2A	20.106	16.445	-0.00897	-0.5411	-0.228	25.8591
504	0	Extremo 1A	20.119	1.207	-0.00106	-0.9898	-0.2339	31.3536
504	0.5	Extremo 1A	20.119	11.679	-0.00106	-0.9898	-0.2333	28.1322
504	1	Extremo 1A	20.119	22.151	-0.00106	-0.9898	-0.2328	19.6747
504	0	Extremo 2A	20.102	1.606	-0.012	-1.0016	-0.2381	30.1719
504	0.5	Extremo 2A	20.102	12.078	-0.012	-1.0016	-0.2322	26.7509
504	1	Extremo 2A	20.102	22.55	-0.012	-1.0016	-0.2263	18.094
505	0	Extremo 1A	20.119	7.379	-0.00139	-1.2649	-0.234	26.6558
505	0.5	Extremo 1A	20.119	17.851	-0.00139	-1.2649	-0.2333	20.3485
505	1	Extremo 1A	20.119	28.323	-0.00139	-1.2649	-0.2326	8.8052
505	0	Extremo 2A	20.096	7.757	-0.016	-1.2443	-0.2396	25.2199
505	0.5	Extremo 2A	20.096	18.229	-0.016	-1.2443	-0.2318	18.7233
505	1	Extremo 2A	20.096	28.701	-0.016	-1.2443	-0.2241	6.9908
506	0	Extremo 1A	20.118	13.414	-0.00181	-0.9506	-0.2342	18.2989
506	0.5	Extremo 1A	20.118	23.886	-0.00181	-0.9506	-0.2332	8.9739
506	1	Extremo 1A	20.118	34.358	-0.00181	-0.9506	-0.2323	-5.587
506	0	Extremo 2A	20.089	13.746	-0.021	-0.8639	-0.2416	16.5626
506	0.5	Extremo 2A	20.089	24.217	-0.021	-0.8639	-0.2313	7.0718
506	1	Extremo 2A	20.089	34.689	-0.021	-0.8639	-0.221	-7.6549
507	0	Extremo 1A	20.117	18.216	-0.00237	0.6361	-0.2344	5.0685
507	0.5	Extremo 1A	20.117	28.688	-0.00237	0.6361	-0.2332	-6.6576
507	1	Extremo 1A	20.117	39.16	-0.00237	0.6361	-0.232	-23.6196
507	0	Extremo 2A	20.08	18.428	-0.027	0.8485	-0.2442	2.9311
507	0.5	Extremo 2A	20.08	28.9	-0.027	0.8485	-0.2306	-8.9007
507	1	Extremo 2A	20.08	39.371	-0.027	0.8485	-0.217	-25.9684
508	0	Extremo 1A	20.116	17.754	-0.00309	3.5667	-0.2347	-15.4837
508	0.5	Extremo 1A	20.116	28.226	-0.00309	3.5667	-0.2331	-26.9788
508	1	Extremo 1A	20.116	38.698	-0.00309	3.5667	-0.2316	-43.7098
508	0	Extremo 2A	20.068	17.635	-0.036	3.9678	-0.2476	-18.2157
508	0.5	Extremo 2A	20.068	28.107	-0.036	3.9678	-0.2297	-29.651
508	1	Extremo 2A	20.068	38.578	-0.036	3.9678	-0.2117	-46.3222
509	0	Extremo 1A	20.114	2.939	-0.00405	3.9839	-0.2351	-43.1398
509	0.5	Extremo 1A	20.114	13.411	-0.00405	3.9839	-0.233	-47.2271
509	1	Extremo 1A	20.114	23.882	-0.00405	3.9839	-0.231	-56.5503
509	0	Extremo 2A	20.052	1.994	-0.048	4.5106	-0.2522	-46.6594
509	0.5	Extremo 2A	20.052	12.466	-0.048	4.5106	-0.2284	-50.2745
509	1	Extremo 2A	20.052	22.938	-0.048	4.5106	-0.2046	-59.1254
510	0	Extremo 1A	20.112	-22.133	-0.00531	-4.1713	-0.2356	-56.1162
510	0.5	Extremo 1A	20.112	-11.661	-0.00531	-4.1713	-0.2329	-47.6677
510	1	Extremo 1A	20.112	-1.189	-0.00531	-4.1713	-0.2302	-44.4552
510	0	Extremo 2A	20.031	-24.243	-0.063	-3.7827	-0.2583	-59.9223
510	0.5	Extremo 2A	20.031	-13.771	-0.063	-3.7827	-0.2267	-50.4188
510	1	Extremo 2A	20.031	-3.299	-0.063	-3.7827	-0.1952	-46.1512
511	0	Extremo 1A	20.109	-36.948	-0.00697	-3.7539	-0.2362	-44.1569
511	0.5	Extremo 1A	20.109	-26.477	-0.00697	-3.7539	-0.2327	-28.3007
511	1	Extremo 1A	20.109	-16.005	-0.00697	-3.7539	-0.2292	-17.6803
511	0	Extremo 2A	20.004	-39.884	-0.084	-3.2404	-0.2664	-47.4076
511	0.5	Extremo 2A	20.004	-29.412	-0.084	-3.2404	-0.2245	-30.0836
511	1	Extremo 2A	20.004	-18.94	-0.084	-3.2404	-0.1825	-17.9956
512	0	Extremo 1A	20.106	-37.41	-0.00916	-0.8229	-0.2371	-24.9483
512	0.5	Extremo 1A	20.106	-26.938	-0.00916	-0.8229	-0.2325	-8.8611
512	1	Extremo 1A	20.106	-16.467	-0.00916	-0.8229	-0.2279	1.9902
512	0	Extremo 2A	19.969	-40.677	-0.112	-0.1223	-0.2773	-27.3413
512	0.5	Extremo 2A	19.969	-30.206	-0.112	-0.1223	-0.2214	-9.6205
512	1	Extremo 2A	19.969	-19.734	-0.112	-0.1223	-0.1656	2.8643
513	0	Extremo 1A	20.102	-32.608	-0.012	0.7647	-0.2382	-7.7978
513	0.5	Extremo 1A	20.102	-22.136	-0.012	0.7647	-0.2322	5.8882
513	1	Extremo 1A	20.102	-11.664	-0.012	0.7647	-0.2262	14.3382
513	0	Extremo 2A	19.924	-35.996	-0.149	1.5872	-0.2918	-9.3127
513	0.5	Extremo 2A	19.924	-25.524	-0.149	1.5872	-0.2173	6.0673
513	1	Extremo 2A	19.924	-15.052	-0.149	1.5872	-0.1428	16.2113
514	0	Extremo 1A	20.096	-26.573	-0.016	1.0811	-0.2397	5.7106
514	0.5	Extremo 1A	20.096	-16.101	-0.016	1.0811	-0.2318	16.3792
514	1	Extremo 1A	20.096	-5.629	-0.016	1.0811	-0.2239	21.8118
514	0	Extremo 2A	19.866	-30.007	-0.199	1.9616	-0.3112	5.0534
514	0.5	Extremo 2A	19.866	-19.535	-0.199	1.9616	-0.2117	17.4388
514	1	Extremo 2A	19.866	-9.063	-0.199	1.9616	-0.1121	24.5883
515	0	Extremo 1A	20.088	-20.403	-0.021	0.8103	-0.2417	15.6934
515	0.5	Extremo 1A	20.088	-9.931	-0.021	0.8103	-0.2313	23.2768
515	1	Extremo 1A	20.088	0.541	-0.021	0.8103	-0.2208	25.6241
515	0	Extremo 2A	19.79	-23.852	-0.267	1.707	-0.3373	15.8874
515	0.5	Extremo 2A	19.79	-13.38	-0.267	1.707	-0.204	25.1955
515	1	Extremo 2A	19.79	-2.908	-0.267	1.707	-0.0707	29.2676
516	0	Extremo 1A	20.079	-14.292	-0.028	0.3423	-0.2444	22.3431
516	0.5	Extremo 1A	20.079	-3.82	-0.028	0.3423	-0.2306	26.8709
516	1	Extremo 1A	20.079	6.652	-0.028	0.3423	-0.2167	26.1629
516	0	Extremo 2A	19.69	-17.738	-0.358	1.2237	-0.3725	23.4031
516	0.5	Extremo 2A	19.69	-7.266	-0.358	1.2237	-0.1935	29.6541
516	1	Extremo 2A	19.69	3.206	-0.358	1.2237	-0.0145	30.6693
517	0	Extremo 1A	20.066	-8.229	-0.037	-0.171	-0.2479	25.7533
517	0.5	Extremo 1A	20.066	2.243	-0.037	-0.171	-0.2296	27.2499
517	1	Extremo 1A	20.066	12.715	-0.037	-0.171	-0.2113	23.5105
517	0	Extremo 2A	19.557	-11.651	-0.482	0.6597	-0.42	27.7215
517	0.5	Extremo 2A	19.557	-1.18	-0.482	0.6597	-0.1788	30.9292
517	1	Extremo 2A	19.557	9.292	-0.482	0.6597	0.0623	28.901
518	0	Extremo 1A	20.05	-2.173	-0.048	-0.6677	-0.2526	25.956
518	0.5	Extremo 1A	20.05	8.299	-0.048	-0.6677	-0.2283	24.4244
518	1	Extremo 1A	20.05	18.771	-0.048	-0.6677	-0.2041	17.6568
518	0	Extremo 2A	19.371	-5.539	-0.653	0.0586	-0.4847	28.9166
518	0.5	Extremo 2A	19.371	4.932	-0.653	0.0586	-0.158	29.0684
518	1	Extremo 2A	19.371	15.404	-0.653	0.0586	0.1687	23.9842
519	0	Extremo 1A	20.029	3.915	-0.064	-1.0751	-0.2588	22.9332
519	0.5	Extremo 1A	20.029	14.387	-0.064	-1.0751	-0.2266	18.3577
519	1	Extremo 1A	20.029	24.859	-0.064	-1.0751	-0.1945	8.5463
519	0	Extremo 2A	19.086	0.654	-0.892	-0.5461	-0.5733	27.0405
519	0.5	Extremo 2A	19.086	11.125	-0.892	-0.5461	-0.1271	24.0957
519	1	Extremo 2A	19.086	21.597	-0.892	-0.5461	0.3192	15.915
520	0	Extremo 1A	20.001	10.024	-0.085	-1.1981	-0.267	16.5471
520	0.5	Extremo 1A	20.001	20.496	-0.085	-1.1981	-0.2243	8.9169
520	1	Extremo 1A	20.001	30.968	-0.085	-1.1981	-0.1817	-3.9492
520	0	Extremo 2A	18.594	6.932	-1.236	-1.045	-0.6956	22.0746
520	0.5	Extremo 2A	18.594	17.403	-1.236	-1.045	-0.0779	15.9909
520	1	Extremo 2A	18.594	27.875	-1.236	-1.045	0.5399	4.6712
521	0	Extremo 1A	19.966	15.881	-0.114	-0.5454	-0.278	6.2744
521	0.5	Extremo 1A	19.966	26.353	-0.114	-0.5454	-0.2212	-4.2839
521	1	Extremo 1A	19.966	36.824	-0.114	-0.5454	-0.1644	-20.0782
521	0	Extremo 2A	17.613	12.991	-1.742	-1.1457	-0.8624	13.7422
521	0.5	Extremo 2A	17.613	23.463	-1.742	-1.1457	0.0085	4.6289
521	1	Extremo 2A	17.613	33.934	-1.742	-1.1457	0.8795	-9.7204
522	0	Extremo 1A	19.92	20.1	-0.151	1.7304	-0.2928	-9.4256
522	0.5	Extremo 1A	19.92	30.572	-0.151	1.7304	-0.217	-22.0938
522	1	Extremo 1A	19.92	41.044	-0.151	1.7304	-0.1413	-39.9979
522	0	Extremo 2A	15.407	18.129	-2.45	-0.2327	-1.0804	1.3601
522	0.5	Extremo 2A	15.407	28.601	-2.45	-0.2327	0.1443	-10.3226
522	1	Extremo 2A	15.407	39.073	-2.45	-0.2327	1.3691	-27.2413
523	0	Extremo 1A	19.86	17.739	-0.202	5.7184	-0.3125	-33.59
523	0.5	Extremo 1A	19.86	28.211	-0.202	5.7184	-0.2114	-45.0776
523	1	Extremo 1A	19.86	38.683	-0.202	5.7184	-0.1102	-61.8012
523	0	Extremo 2A	10.06	26.269	-2.854	3.7009	-1.5437	-16.9202
523	0.5	Extremo 2A	10.06	36.741	-2.854	3.7009	-0.1167	-32.6727
523	1	Extremo 2A	10.06	47.213	-2.854	3.7009	1.3104	-53.6611
524	0	Extremo 1A	19.782	-2.243	-0.271	6.7027	-0.339	-65.9709
524	0.5	Extremo 1A	19.782	8.228	-0.271	6.7027	-0.2036	-67.4672
524	1	Extremo 1A	19.782	18.7	-0.271	6.7027	-0.0682	-74.1993
524	0	Extremo 2A	4.713	15.586	-2.45	4.5378	-1.6026	-49.5001
524	0.5	Extremo 2A	4.713	26.058	-2.45	4.5378	-0.3777	-59.9111
524	1	Extremo 2A	4.713	36.53	-2.45	4.5378	0.8472	-75.5579
525	0	Extremo 1A	19.681	-34.759	-0.364	-2.7357	-0.3747	-80.0225
525	0.5	Extremo 1A	19.681	-24.287	-0.364	-2.7357	-0.193	-65.261
525	1	Extremo 1A	19.681	-13.815	-0.364	-2.7357	-0.0112	-55.7355
525	0	Extremo 2A	2.506	-18.595	-1.742	-6.7163	-1.113	-69.813

525	0.5	Extremo 2A	2.506	-8.123	-1.742	-6.7163	-0.2419	-63.1337
525	1	Extremo 2A	2.506	2.349	-1.742	-6.7163	0.6292	-61.6903
526	0	Extremo 1A	19.545	-54.705	-0.49	-1.8088	-0.4229	-63.1712
526	0.5	Extremo 1A	19.545	-44.233	-0.49	-1.8088	-0.1781	-38.4366
526	1	Extremo 1A	19.545	-33.761	-0.49	-1.8088	0.0667	-18.938
526	0	Extremo 2A	1.525	-40.391	-1.236	-6.2063	-0.7735	-56.7547
526	0.5	Extremo 2A	1.525	-29.919	-1.236	-6.2063	-0.1555	-39.1772
526	1	Extremo 2A	1.525	-19.447	-1.236	-6.2063	0.4626	-26.8357
527	0	Extremo 1A	19.354	-56.979	-0.663	2.0435	-0.4885	-36.8133
527	0.5	Extremo 1A	19.354	-46.507	-0.663	2.0435	-0.157	-10.9418
527	1	Extremo 1A	19.354	-36.035	-0.663	2.0435	0.1744	9.6939
527	0	Extremo 2A	1.033	-43.506	-0.893	-2.1134	-0.5529	-33.141
527	0.5	Extremo 2A	1.033	-33.034	-0.893	-2.1134	-0.1063	-14.0061
527	1	Extremo 2A	1.033	-22.562	-0.893	-2.1134	0.3404	-0.1071
528	0	Extremo 1A	19.065	-52.592	-0.905	4.054	-0.5783	-12.1411
528	0.5	Extremo 1A	19.065	-42.12	-0.905	4.054	-0.1258	11.5369
528	1	Extremo 1A	19.065	-31.648	-0.905	4.054	0.3266	29.979
528	0	Extremo 2A	0.748	-39.578	-0.654	0.3099	-0.4026	-11.1679
528	0.5	Extremo 2A	0.748	-29.106	-0.654	0.3099	-0.0753	6.0032
528	1	Extremo 2A	0.748	-18.634	-0.654	0.3099	0.2519	17.9384
529	0	Extremo 1A	18.567	-46.449	-1.252	4.1998	-0.7022	9.103
529	0.5	Extremo 1A	18.567	-35.977	-1.252	4.1998	-0.0763	29.7093
529	1	Extremo 1A	18.567	-25.505	-1.252	4.1998	0.5497	45.0797
529	0	Extremo 2A	0.561	-33.842	-0.484	1.0498	-0.2963	7.0532
529	0.5	Extremo 2A	0.561	-23.37	-0.484	1.0498	-0.0544	21.356
529	1	Extremo 2A	0.561	-12.898	-0.484	1.0498	0.1875	30.4229
530	0	Extremo 1A	17.578	-39.904	-1.763	3.0802	-0.871	27.4088
530	0.5	Extremo 1A	17.578	-29.432	-1.763	3.0802	0.0107	44.7426
530	1	Extremo 1A	17.578	-18.96	-1.763	3.0802	0.8924	56.8406
530	0	Extremo 2A	0.427	-27.779	-0.36	0.9656	-0.2197	21.6504
530	0.5	Extremo 2A	0.427	-17.307	-0.36	0.9656	-0.0397	32.9218
530	1	Extremo 2A	0.427	-6.835	-0.36	0.9656	0.1402	38.9572
531	0	Extremo 1A	15.362	-32.415	-2.478	0.8877	-1.0918	44.0428
531	0.5	Extremo 1A	15.362	-21.943	-2.478	0.8877	0.1472	57.6322
531	1	Extremo 1A	15.362	-11.471	-2.478	0.8877	1.3862	65.9856
531	0	Extremo 2A	0.326	-21.697	-0.269	0.567	-0.1637	32.8727
531	0.5	Extremo 2A	0.326	-11.225	-0.269	0.567	-0.0292	41.1032
531	1	Extremo 2A	0.326	-0.753	-0.269	0.567	0.1054	44.0978
532	0	Extremo 1A	10.002	-14.795	-2.891	-0.2703	-1.5586	60.5626
532	0.5	Extremo 1A	10.002	-4.323	-2.891	-0.2703	-0.1129	65.3421
532	1	Extremo 1A	10.002	6.149	-2.891	-0.2703	1.3329	64.8858
532	0	Extremo 2A	0.249	-15.616	-0.202	0.0594	-0.1226	40.8524
532	0.5	Extremo 2A	0.249	-5.144	-0.202	0.0594	-0.0214	46.0423
532	1	Extremo 2A	0.249	5.328	-0.202	0.0594	0.0797	45.9962
533	0	Extremo 1A	4.638	2.829	-2.499	-1.4152	-1.6222	68.3749
533	0.5	Extremo 1A	4.638	13.301	-2.499	-1.4152	-0.3726	64.3422
533	1	Extremo 1A	4.638	23.773	-2.499	-1.4152	0.8769	55.0736
533	0	Extremo 2A	0.189	-9.5	-0.153	-0.4751	-0.0923	45.6453
533	0.5	Extremo 2A	0.189	0.972	-0.153	-0.4751	-0.0157	47.7773
533	1	Extremo 2A	0.189	11.444	-0.153	-0.4751	0.0609	44.6732
534	0	Extremo 1A	2.409	10.306	-1.807	-3.5494	-1.1388	65.8966
534	0.5	Extremo 1A	2.409	20.777	-1.807	-3.5494	-0.2351	58.1259
534	1	Extremo 1A	2.409	31.249	-1.807	-3.5494	0.6686	45.1192
534	0	Extremo 2A	0.142	-3.322	-0.117	-0.9576	-0.0701	47.2424
534	0.5	Extremo 2A	0.142	7.15	-0.117	-0.9576	-0.0115	46.2855
534	1	Extremo 2A	0.142	17.622	-0.117	-0.9576	0.0472	40.0926
535	0	Extremo 1A	1.401	16.692	-1.322	-4.5277	-0.8073	60.6304
535	0.5	Extremo 1A	1.401	27.164	-1.322	-4.5277	-0.1463	49.6664
535	1	Extremo 1A	1.401	37.636	-1.322	-4.5277	0.5148	33.4665
535	0	Extremo 2A	0.104	2.85	-0.091	-1.2167	-0.0538	45.486
535	0.5	Extremo 2A	0.104	13.322	-0.091	-1.2167	-0.0082	41.443
535	1	Extremo 2A	0.104	23.794	-0.091	-1.2167	0.0374	32.164
536	0	Extremo 1A	0.875	22.131	-1.007	-4.2502	-0.5966	51.619
536	0.5	Extremo 1A	0.875	32.603	-1.007	-4.2502	-0.0933	37.9355
536	1	Extremo 1A	0.875	43.075	-1.007	-4.2502	0.41	19.016
536	0	Extremo 2A	0.074	8.533	-0.073	-0.9584	-0.0419	39.8316
536	0.5	Extremo 2A	0.074	19.005	-0.073	-0.9584	-0.0056	32.9472
536	1	Extremo 2A	0.074	29.477	-0.073	-0.9584	0.0306	20.827
537	0	Extremo 1A	0.549	24.301	-0.802	-2.9244	-0.4561	37.0821
537	0.5	Extremo 1A	0.549	34.773	-0.802	-2.9244	-0.055	22.3137
537	1	Extremo 1A	0.549	45.245	-0.802	-2.9244	0.3461	2.3094
537	0	Extremo 2A	0.049	11.886	-0.06	-0.1897	-0.0331	29.1483
537	0.5	Extremo 2A	0.049	22.358	-0.06	-0.1897	-0.0033	20.5873
537	1	Extremo 2A	0.049	32.83	-0.06	-0.1897	0.0264	6.7904
538	0	Extremo 1A	0.316	18.013	-0.666	-2.8303	-0.3491	16.8633
538	0.5	Extremo 1A	0.316	28.485	-0.666	-2.8303	-0.016	5.2387
538	1	Extremo 1A	0.316	38.957	-0.666	-2.8303	0.3171	-11.6218
538	0	Extremo 2A	0.029	8.725	-0.05	-0.7208	-0.0257	13.4687
538	0.5	Extremo 2A	0.029	19.197	-0.05	-0.7208	-0.00066	6.4882
538	1	Extremo 2A	0.029	29.669	-0.05	-0.7208	0.0244	-5.7283
539	0	Extremo 1A	0.137	5.298	-0.52	-7.0035	-0.2216	2.7597
539	0.5	Extremo 1A	0.137	15.77	-0.52	-7.0035	0.0386	-2.5072
539	1	Extremo 1A	0.137	26.242	-0.52	-7.0035	0.2987	-13.0101
539	0	Extremo 2A	0.012	0.938	-0.039	-4.9226	-0.0162	2.5287
539	0.5	Extremo 2A	0.012	11.41	-0.039	-4.9226	0.0032	-0.5582
539	1	Extremo 2A	0.012	21.882	-0.039	-4.9226	0.0225	-8.8811
540	0	Extremo 1A	-0.416	-15.999	0.838	-3.0347	0.4648	-4.3694
540	0.5	Extremo 1A	-0.416	-5.527	0.838	-3.0347	0.0459	1.012
540	1	Extremo 1A	-0.416	4.945	0.838	-3.0347	-0.373	1.1574
540	0	Extremo 2A	-0.416	-15.999	0.838	-3.0347	0.4648	-4.3694
540	0.5	Extremo 2A	-0.416	-5.527	0.838	-3.0347	0.0459	1.012
540	1	Extremo 2A	-0.416	4.945	0.838	-3.0347	-0.373	1.1574
541	0	Extremo 1A	-0.89	-16.174	0.827	-0.1556	0.3498	-1.6004
541	0.5	Extremo 1A	-0.89	-5.702	0.827	-0.1556	-0.0637	3.8686
541	1	Extremo 1A	-0.89	4.77	0.827	-0.1556	-0.4772	4.1016
541	0	Extremo 2A	-0.89	-16.174	0.827	-0.1556	0.3498	-1.6004
541	0.5	Extremo 2A	-0.89	-5.702	0.827	-0.1556	-0.0637	3.8686
541	1	Extremo 2A	-0.89	4.77	0.827	-0.1556	-0.4772	4.1016
542	0	Extremo 1A	-1.289	-15.342	0.656	0.6637	0.2086	3.527
542	0.5	Extremo 1A	-1.289	-4.87	0.656	0.6637	-0.1196	8.5798
542	1	Extremo 1A	-1.289	5.602	0.656	0.6637	-0.4479	8.3966
542	0	Extremo 2A	-1.289	-15.342	0.656	0.6637	0.2086	3.527
542	0.5	Extremo 2A	-1.289	-4.87	0.656	0.6637	-0.1196	8.5798
542	1	Extremo 2A	-1.289	5.602	0.656	0.6637	-0.4479	8.3966
543	0	Extremo 1A	-1.59	-11.922	0.507	0.3756	0.1078	8.0968
543	0.5	Extremo 1A	-1.59	-1.45	0.507	0.3756	-0.1456	11.4396
543	1	Extremo 1A	-1.59	9.022	0.507	0.3756	-0.3989	9.5465
543	0	Extremo 2A	-1.59	-11.922	0.507	0.3756	0.1078	8.0968
543	0.5	Extremo 2A	-1.59	-1.45	0.507	0.3756	-0.1456	11.4396
543	1	Extremo 2A	-1.59	9.022	0.507	0.3756	-0.3989	9.5465
544	0	Extremo 1A	-1.813	-7.409	0.394	0.0191	0.0339	10.1473
544	0.5	Extremo 1A	-1.813	3.063	0.394	0.0191	-0.1629	11.2338
544	1	Extremo 1A	-1.813	13.535	0.394	0.0191	-0.3598	7.0844
544	0	Extremo 2A	-1.813	-7.409	0.394	0.0191	0.0339	10.1473
544	0.5	Extremo 2A	-1.813	3.063	0.394	0.0191	-0.1629	11.2338
544	1	Extremo 2A	-1.813	13.535	0.394	0.0191	-0.3598	7.0844
545	0	Extremo 1A	-1.977	-2.596	0.305	-0.323	-0.025	9.1703
545	0.5	Extremo 1A	-1.977	7.876	0.305	-0.323	-0.1777	7.8503
545	1	Extremo 1A	-1.977	18.348	0.305	-0.323	-0.3305	1.2943
545	0	Extremo 2A	-1.977	-2.596	0.305	-0.323	-0.025	9.1703
545	0.5	Extremo 2A	-1.977	7.876	0.305	-0.323	-0.1777	7.8503
545	1	Extremo 2A	-1.977	18.348	0.305	-0.323	-0.3305	1.2943
546	0	Extremo 1A	-2.096	2.108	0.234	-0.9572	-0.0731	4.8916
546	0.5	Extremo 1A	-2.096	12.58	0.234	-0.9572	-0.1903	1.2199
546	1	Extremo 1A	-2.096	23.051	0.234	-0.9572	-0.3075	-7.6879
546	0	Extremo 2A	-2.096	2.108	0.234	-0.9572	-0.0731	4.8917
546	0.5	Extremo 2A	-2.096	12.58	0.234	-0.9572	-0.1903	1.2199
546	1	Extremo 2A	-2.096	23.051	0.234	-0.9572	-0.3075	-7.6879
547	0	Extremo 1A	-2.179	5.774	0.177	-2.3062	-0.1119	-3.4026
547	0.5	Extremo 1A	-2.179	16.246	0.177	-2.3062	-0.2005	-8.9075
547	1	Extremo 1A	-2.179	26.718	0.177	-2.3062	-0.2892	-19.6483
547	0	Extremo 2A	-2.179	5.774	0.177	-2.3062	-0.1119	-3.4026
547	0.5	Extremo 2A	-2.179	16.246	0.177	-2.3062	-0.2005	-8.9075
547	1	Extremo 2A	-2.179	26.718	0.177	-2.3062	-0.2892	-19.6483
548	0	Extremo 1A	-2.235	5.528	0.132	-4.1344	-0.1425	-16.9483
548	0.5	Extremo 1A	-2.235	16	0.132	-4.1344	-0.2086	-22.3305
548	1	Extremo 1A	-2.235	26.472	0.132	-4.1344	-0.2746	-32.9486
548	0	Extremo 2A	-2.235	5.528	0.132	-4.1344	-0.1425	-16.9483
548	0.5	Extremo 2A	-2.235	16	0.132	-4.1344	-0.2086	-22.3305
548	1	Extremo 2A	-2.235	26.472	0.132	-4.1344	-0.2746	-32.9486
549	0	Extremo 1A	-2.272	-4.229	0.097	-3.3324	-0.1663	-34.4378
549	0.5	Extremo 1A	-2.272	6.243	0.097	-3.3324	-0.2148	-34.9412
549	1	Extremo 1A	-2.272	16.715	0.097	-3.3324	-0.2632	-40.6805
549	0	Extremo 2A	-2.272	-4.229	0.097	-3.3324	-0.1663	-34.4377

549	0.5	Extremo 2A	-2.272	6.243	0.097	-3.3324	-0.2148	-34.9411
549	1	Extremo 2A	-2.272	16.715	0.097	-3.3324	-0.2632	-40.6805
550	0	Extremo 1A	-2.294	-20.027	0.07	4.3305	-0.1845	-40.6204
550	0.5	Extremo 1A	-2.294	-9.555	0.07	4.3305	-0.2195	-33.2249
550	1	Extremo 1A	-2.294	0.917	0.07	4.3305	-0.2546	-31.0654
550	0	Extremo 2A	-2.294	-20.027	0.07	4.3305	-0.1845	-40.6204
550	0.5	Extremo 2A	-2.294	-9.555	0.07	4.3305	-0.2195	-33.2249
550	1	Extremo 2A	-2.294	0.917	0.07	4.3305	-0.2546	-31.0654
551	0	Extremo 1A	-2.307	-29.826	0.05	5.1047	-0.1981	-29.4819
551	0.5	Extremo 1A	-2.307	-19.354	0.05	5.1047	-0.2231	-17.1869
551	1	Extremo 1A	-2.307	-8.882	0.05	5.1047	-0.2481	-10.1279
551	0	Extremo 2A	-2.307	-29.826	0.05	5.1047	-0.1981	-29.4819
551	0.5	Extremo 2A	-2.307	-19.354	0.05	5.1047	-0.2231	-17.1869
551	1	Extremo 2A	-2.307	-8.882	0.05	5.1047	-0.2481	-10.1279
552	0	Extremo 1A	-2.314	-30.164	0.035	3.2178	-0.2083	-12.8162
552	0.5	Extremo 1A	-2.314	-19.692	0.035	3.2178	-0.2258	-0.3522
552	1	Extremo 1A	-2.314	-9.22	0.035	3.2178	-0.2433	6.8759
552	0	Extremo 2A	-2.314	-30.164	0.035	3.2178	-0.2083	-12.8162
552	0.5	Extremo 2A	-2.314	-19.692	0.035	3.2178	-0.2258	-0.3522
552	1	Extremo 2A	-2.314	-9.22	0.035	3.2178	-0.2433	6.8759
553	0	Extremo 1A	-2.316	-26.66	0.024	1.7778	-0.2158	2.4491
553	0.5	Extremo 1A	-2.316	-16.188	0.024	1.7778	-0.2278	13.1612
553	1	Extremo 1A	-2.316	-5.717	0.024	1.7778	-0.2399	18.6374
553	0	Extremo 2A	-2.316	-26.66	0.024	1.7778	-0.2158	2.4491
553	0.5	Extremo 2A	-2.316	-16.188	0.024	1.7778	-0.2278	13.1612
553	1	Extremo 2A	-2.316	-5.716	0.024	1.7778	-0.2399	18.6374
554	0	Extremo 1A	-2.316	-22.206	0.016	1.034	-0.2213	14.6656
554	0.5	Extremo 1A	-2.316	-11.734	0.016	1.034	-0.2294	23.1504
554	1	Extremo 1A	-2.316	-1.262	0.016	1.034	-0.2375	26.3992
554	0	Extremo 2A	-2.316	-22.206	0.016	1.034	-0.2213	14.6656
554	0.5	Extremo 2A	-2.316	-11.734	0.016	1.034	-0.2294	23.1504
554	1	Extremo 2A	-2.316	-1.262	0.016	1.034	-0.2375	26.3992
555	0	Extremo 1A	-2.314	-17.692	0.011	0.6148	-0.2252	23.6639
555	0.5	Extremo 1A	-2.314	-7.22	0.011	0.6148	-0.2305	29.8919
555	1	Extremo 1A	-2.314	3.252	0.011	0.6148	-0.2358	30.884
555	0	Extremo 2A	-2.314	-17.692	0.011	0.6148	-0.2252	23.6639
555	0.5	Extremo 2A	-2.314	-7.22	0.011	0.6148	-0.2305	29.8919
555	1	Extremo 2A	-2.314	3.252	0.011	0.6148	-0.2358	30.884
556	0	Extremo 1A	-2.311	-13.282	0.00667	0.284	-0.228	29.498
556	0.5	Extremo 1A	-2.311	-2.81	0.00667	0.284	-0.2313	33.5211
556	1	Extremo 1A	-2.311	7.662	0.00667	0.284	-0.2346	32.3083
556	0	Extremo 2A	-2.311	-13.282	0.00667	0.284	-0.228	29.498
556	0.5	Extremo 2A	-2.311	-2.81	0.00667	0.284	-0.2313	33.5211
556	1	Extremo 2A	-2.311	7.662	0.00667	0.284	-0.2346	32.3083
557	0	Extremo 1A	-2.309	-8.938	0.00395	-0.0341	-0.2299	32.2222
557	0.5	Extremo 1A	-2.309	1.534	0.00395	-0.0341	-0.2319	34.0733
557	1	Extremo 1A	-2.309	12.006	0.00395	-0.0341	-0.2339	30.6884
557	0	Extremo 2A	-2.309	-8.938	0.00395	-0.0341	-0.2299	32.2222
557	0.5	Extremo 2A	-2.309	1.534	0.00395	-0.0341	-0.2319	34.0733
557	1	Extremo 2A	-2.309	12.006	0.00395	-0.0341	-0.2339	30.6884
558	0	Extremo 1A	-2.306	-4.58	0.00211	-0.3456	-0.2313	31.8826
558	0.5	Extremo 1A	-2.306	5.892	0.00211	-0.3456	-0.2324	31.5548
558	1	Extremo 1A	-2.306	16.363	0.00211	-0.3456	-0.2334	25.991
558	0	Extremo 2A	-2.306	-4.58	0.00211	-0.3456	-0.2313	31.8826
558	0.5	Extremo 2A	-2.306	5.892	0.00211	-0.3456	-0.2324	31.5547
558	1	Extremo 2A	-2.306	16.363	0.00211	-0.3456	-0.2334	25.991
559	0	Extremo 1A	-2.303	-0.128	0.0009	-0.6597	-0.2322	28.5189
559	0.5	Extremo 1A	-2.303	10.344	0.0009	-0.6597	-0.2327	25.9647
559	1	Extremo 1A	-2.303	20.816	0.0009	-0.6597	-0.2331	18.1746
559	0	Extremo 2A	-2.303	-0.128	0.0009	-0.6597	-0.2322	28.5189
559	0.5	Extremo 2A	-2.303	10.344	0.0009	-0.6597	-0.2327	25.9647
559	1	Extremo 2A	-2.303	20.816	0.0009	-0.6597	-0.2331	18.1746
560	0	Extremo 1A	-2.301	4.459	0.00013	-1.0664	-0.2328	22.1153
560	0.5	Extremo 1A	-2.301	14.931	0.00013	-1.0664	-0.2329	17.2679
560	1	Extremo 1A	-2.301	25.403	0.00013	-1.0664	-0.233	7.1846
560	0	Extremo 2A	-2.301	4.459	0.00013	-1.0664	-0.2328	22.1152
560	0.5	Extremo 2A	-2.301	14.931	0.00013	-1.0664	-0.2329	17.2679
560	1	Extremo 2A	-2.301	25.403	0.00013	-1.0664	-0.233	7.1846
561	0	Extremo 1A	-2.298	8.989	-0.00034	-1.8403	-0.2332	12.4248
561	0.5	Extremo 1A	-2.298	19.461	-0.00034	-1.8403	-0.2331	5.3124
561	1	Extremo 1A	-2.298	29.933	-0.00034	-1.8403	-0.2329	-7.036
561	0	Extremo 2A	-2.298	8.989	-0.00034	-1.8403	-0.2332	12.4247
561	0.5	Extremo 2A	-2.298	19.461	-0.00034	-1.8403	-0.2331	5.3123
561	1	Extremo 2A	-2.298	29.933	-0.00034	-1.8403	-0.2329	-7.036
562	0	Extremo 1A	-2.297	12.431	-0.0006	-3.4129	-0.2335	-1.3848
562	0.5	Extremo 1A	-2.297	22.903	-0.0006	-3.4129	-0.2332	-10.2181
562	1	Extremo 1A	-2.297	33.374	-0.0006	-3.4129	-0.2329	-24.2874
562	0	Extremo 2A	-2.297	12.431	-0.0006	-3.4129	-0.2335	-1.3848
562	0.5	Extremo 2A	-2.297	22.903	-0.0006	-3.4129	-0.2332	-10.2182
562	1	Extremo 2A	-2.297	33.374	-0.0006	-3.4129	-0.2329	-24.2874
563	0	Extremo 1A	-2.295	11.439	-0.00072	-5.4983	-0.2336	-20.7484
563	0.5	Extremo 1A	-2.295	21.911	-0.00072	-5.4983	-0.2333	-29.086
563	1	Extremo 1A	-2.295	32.383	-0.00072	-5.4983	-0.2329	-42.6595
563	0	Extremo 2A	-2.295	11.439	-0.00072	-5.4983	-0.2336	-20.7485
563	0.5	Extremo 2A	-2.295	21.911	-0.00072	-5.4983	-0.2333	-29.0861
563	1	Extremo 2A	-2.295	32.383	-0.00072	-5.4983	-0.2329	-42.6596
564	0	Extremo 1A	-2.294	-0.494	-0.00076	-4.5061	-0.2337	-44.1553
564	0.5	Extremo 1A	-2.294	9.978	-0.00076	-4.5061	-0.2333	-46.5265
564	1	Extremo 1A	-2.294	20.45	-0.00076	-4.5061	-0.2329	-54.1336
564	0	Extremo 2A	-2.294	-0.494	-0.00076	-4.5061	-0.2337	-44.1553
564	0.5	Extremo 2A	-2.294	9.978	-0.00076	-4.5061	-0.2333	-46.5265
564	1	Extremo 2A	-2.294	20.45	-0.00076	-4.5061	-0.2329	-54.1336
565	0	Extremo 1A	-2.293	-19.378	-0.00074	4.4459	-0.2337	-53.9653
565	0.5	Extremo 1A	-2.293	-8.907	-0.00074	4.4459	-0.2334	-46.8941
565	1	Extremo 1A	-2.293	1.565	-0.00074	4.4459	-0.233	-45.0588
565	0	Extremo 2A	-2.293	-19.378	-0.00074	4.4459	-0.2337	-53.9654
565	0.5	Extremo 2A	-2.293	-8.907	-0.00074	4.4459	-0.2334	-46.8941
565	1	Extremo 2A	-2.293	1.565	-0.00074	4.4459	-0.233	-45.0588
566	0	Extremo 1A	-2.292	-31.311	-0.00069	5.4385	-0.2337	-43.2262
566	0.5	Extremo 1A	-2.292	-20.839	-0.00069	5.4385	-0.2334	-30.1888
566	1	Extremo 1A	-2.292	-10.367	-0.00069	5.4385	-0.233	-22.3874
566	0	Extremo 2A	-2.292	-31.311	-0.00069	5.4385	-0.2337	-43.2263
566	0.5	Extremo 2A	-2.292	-20.839	-0.00069	5.4385	-0.2334	-30.1889
566	1	Extremo 2A	-2.292	-10.367	-0.00069	5.4385	-0.233	-22.3874
567	0	Extremo 1A	-2.291	-32.301	-0.00062	3.354	-0.2337	-25.5886
567	0.5	Extremo 1A	-2.291	-21.829	-0.00062	3.354	-0.2334	-12.056
567	1	Extremo 1A	-2.291	-11.358	-0.00062	3.354	-0.2331	-3.7592
567	0	Extremo 2A	-2.291	-32.301	-0.00062	3.354	-0.2337	-25.5886
567	0.5	Extremo 2A	-2.291	-21.829	-0.00062	3.354	-0.2334	-12.056
567	1	Extremo 2A	-2.291	-11.358	-0.00062	3.354	-0.2331	-3.7592
568	0	Extremo 1A	-2.29	-28.858	-0.00055	1.7828	-0.2337	-9.0708
568	0.5	Extremo 1A	-2.29	-18.386	-0.00055	1.7828	-0.2334	2.74
568	1	Extremo 1A	-2.29	-7.914	-0.00055	1.7828	-0.2331	9.3148
568	0	Extremo 2A	-2.29	-28.858	-0.00055	1.7828	-0.2337	-9.0709
568	0.5	Extremo 2A	-2.29	-18.386	-0.00055	1.7828	-0.2334	2.74
568	1	Extremo 2A	-2.29	-7.914	-0.00055	1.7828	-0.2331	9.3149
569	0	Extremo 1A	-2.29	-24.324	-0.00048	1.0113	-0.2337	4.4175
569	0.5	Extremo 1A	-2.29	-13.852	-0.00048	1.0113	-0.2334	13.9617
569	1	Extremo 1A	-2.29	-3.381	-0.00048	1.0113	-0.2332	18.27
569	0	Extremo 2A	-2.29	-24.324	-0.00048	1.0113	-0.2337	4.4175
569	0.5	Extremo 2A	-2.29	-13.852	-0.00048	1.0113	-0.2334	13.9617
569	1	Extremo 2A	-2.29	-3.381	-0.00048	1.0113	-0.2332	18.27
570	0	Extremo 1A	-2.289	-19.733	-0.00041	0.6089	-0.2336	14.6778
570	0.5	Extremo 1A	-2.289	-9.261	-0.00041	0.6089	-0.2334	21.9261
570	1	Extremo 1A	-2.289	1.211	-0.00041	0.6089	-0.2332	23.9385
570	0	Extremo 2A	-2.289	-19.733	-0.00041	0.6089	-0.2336	14.6778
570	0.5	Extremo 2A	-2.289	-9.261	-0.00041	0.6089	-0.2334	21.9262
570	1	Extremo 2A	-2.289	1.211	-0.00041	0.6089	-0.2332	23.9385
571	0	Extremo 1A	-2.289	-15.271	-0.00035	0.302	-0.2336	21.7689
571	0.5	Extremo 1A	-2.289	-4.799	-0.00035	0.302	-0.2334	26.7862
571	1	Extremo 1A	-2.289	5.673	-0.00035	0.302	-0.2333	26.5676
571	0	Extremo 2A	-2.289	-15.271	-0.00035	0.302	-0.2336	21.769
571	0.5	Extremo 2A	-2.289	-4.799	-0.00035	0.302	-0.2334	26.7863
571	1	Extremo 2A	-2.289	5.673	-0.00035	0.302	-0.2333	26.5676
572	0	Extremo 1A	-2.289	-10.897	-0.00029	0.002	-0.2336	25.7486
572	0.5	Extremo 1A	-2.289	-0.425	-0.00029	0.002	-0.2334	28.579
572	1	Extremo 1A	-2.289	10.047	-0.00029	0.002	-0.2333	26.1735
572	0	Extremo 2A	-2.289	-10.897	-0.00029	0.002	-0.2336	25.7487
572	0.5	Extremo 2A	-2.289	-0.425	-0.00029	0.002	-0.2334	28.5791
572	1	Extremo 2A	-2.289	10.047	-0.00029	0.002	-0.2333	26.1736
573	0	Extremo 1A	-2.288	-6.525	-0.00024	-0.2984	-0.2336	26.6635
573	0.5	Extremo 1A	-2.288	3.947	-0.00024	-0.2984	-0.2334	27.308
573	1	Extremo 1A	-2.288	14.419	-0.00024	-0.2984	-0.2333	22.7167
573	0	Extremo 2A	-2.288	-6.525	-0.00024	-0.2984	-0.2336	26.6635

573	0.5	Extremo 2A	-2.288	3.947	-0.00024	-0.2984	-0.2334	27.3081
573	1	Extremo 2A	-2.288	14.419	-0.00024	-0.2984	-0.2333	22.7168
574	0	Extremo 1A	-2.288	-2.07	-0.0002	-0.6057	-0.2335	24.5529
574	0.5	Extremo 1A	-2.288	8.402	-0.0002	-0.6057	-0.2334	22.9698
574	1	Extremo 1A	-2.288	18.874	-0.0002	-0.6057	-0.2333	16.1507
574	0	Extremo 2A	-2.288	-2.07	-0.0002	-0.6057	-0.2335	24.553
574	0.5	Extremo 2A	-2.288	8.402	-0.0002	-0.6057	-0.2334	22.9699
574	1	Extremo 2A	-2.288	18.874	-0.0002	-0.6057	-0.2333	16.1508
575	0	Extremo 1A	-2.288	2.512	-0.00017	-1.0038	-0.2335	19.403
575	0.5	Extremo 1A	-2.288	12.984	-0.00017	-1.0038	-0.2334	15.5289
575	1	Extremo 1A	-2.288	23.456	-0.00017	-1.0038	-0.2333	6.4188
575	0	Extremo 2A	-2.288	2.512	-0.00017	-1.0038	-0.2335	19.4032
575	0.5	Extremo 2A	-2.288	12.984	-0.00017	-1.0038	-0.2334	15.529
575	1	Extremo 2A	-2.288	23.456	-0.00017	-1.0038	-0.2333	6.419
576	0	Extremo 1A	-2.288	7.042	-0.00014	-1.7553	-0.2335	10.9779
576	0.5	Extremo 1A	-2.288	17.514	-0.00014	-1.7553	-0.2334	4.8388
576	1	Extremo 1A	-2.288	27.986	-0.00014	-1.7553	-0.2334	-6.5362
576	0	Extremo 2A	-2.288	7.042	-0.00014	-1.7553	-0.2335	10.978
576	0.5	Extremo 2A	-2.288	17.514	-0.00014	-1.7553	-0.2334	4.839
576	1	Extremo 2A	-2.288	27.986	-0.00014	-1.7553	-0.2334	-6.536
577	0	Extremo 1A	-2.288	10.527	-0.00011	-3.2748	-0.2335	-1.5229
577	0.5	Extremo 1A	-2.288	20.999	-0.00011	-3.2748	-0.2334	-9.4046
577	1	Extremo 1A	-2.288	31.471	-0.00011	-3.2748	-0.2334	-22.5222
577	0	Extremo 2A	-2.288	10.527	-0.00011	-3.2748	-0.2335	-1.5228
577	0.5	Extremo 2A	-2.288	20.999	-0.00011	-3.2748	-0.2334	-9.4044
577	1	Extremo 2A	-2.288	31.471	-0.00011	-3.2748	-0.2334	-22.522
578	0	Extremo 1A	-2.288	9.741	-9.1E-05	-5.2855	-0.2335	-19.4819
578	0.5	Extremo 1A	-2.288	20.213	-9.1E-05	-5.2855	-0.2334	-26.9704
578	1	Extremo 1A	-2.288	30.685	-9.1E-05	-5.2855	-0.2334	-39.6949
578	0	Extremo 2A	-2.288	9.741	-9.1E-05	-5.2855	-0.2335	-19.4817
578	0.5	Extremo 2A	-2.288	20.213	-9.1E-05	-5.2855	-0.2334	-26.9702
578	1	Extremo 2A	-2.288	30.685	-9.1E-05	-5.2855	-0.2334	-39.6947
579	0	Extremo 1A	-2.288	-1.6	-7.4E-05	-4.3218	-0.2335	-41.4395
579	0.5	Extremo 1A	-2.288	8.872	-7.4E-05	-4.3218	-0.2334	-43.2575
579	1	Extremo 1A	-2.288	19.344	-7.4E-05	-4.3218	-0.2334	-50.3114
579	0	Extremo 2A	-2.288	-1.6	-7.4E-05	-4.3218	-0.2335	-41.4393
579	0.5	Extremo 2A	-2.288	8.872	-7.4E-05	-4.3218	-0.2334	-43.2573
579	1	Extremo 2A	-2.288	19.344	-7.4E-05	-4.3218	-0.2334	-50.3112
580	0	Extremo 1A	-2.288	-19.65	-6E-05	4.3275	-0.2335	-50.3675
580	0.5	Extremo 1A	-2.288	-9.178	-6E-05	4.3275	-0.2334	-43.1607
580	1	Extremo 1A	-2.288	1.294	-6E-05	4.3275	-0.2334	-41.1898
580	0	Extremo 2A	-2.288	-19.649	-6E-05	4.3275	-0.2335	-50.3673
580	0.5	Extremo 2A	-2.288	-9.178	-6E-05	4.3275	-0.2334	-43.1605
580	1	Extremo 2A	-2.288	1.294	-6E-05	4.3275	-0.2334	-41.1897
581	0	Extremo 1A	-2.288	-30.991	-4.8E-05	5.2911	-0.2334	-39.5573
581	0.5	Extremo 1A	-2.288	-20.519	-4.8E-05	5.2911	-0.2334	-26.6799
581	1	Extremo 1A	-2.288	-10.047	-4.8E-05	5.2911	-0.2334	-19.0385
581	0	Extremo 2A	-2.288	-30.991	-4.8E-05	5.2911	-0.2334	-39.5571
581	0.5	Extremo 2A	-2.288	-20.519	-4.8E-05	5.2911	-0.2334	-26.6798
581	1	Extremo 2A	-2.288	-10.047	-4.8E-05	5.2911	-0.2334	-19.0384
582	0	Extremo 1A	-2.288	-31.777	-3.9E-05	3.2803	-0.2334	-22.191
582	0.5	Extremo 1A	-2.288	-21.305	-3.9E-05	3.2803	-0.2334	-8.9204
582	1	Extremo 1A	-2.288	-10.833	-3.9E-05	3.2803	-0.2334	-0.8857
582	0	Extremo 2A	-2.288	-31.777	-3.9E-05	3.2803	-0.2334	-22.1909
582	0.5	Extremo 2A	-2.288	-21.305	-3.9E-05	3.2803	-0.2334	-8.9204
582	1	Extremo 2A	-2.288	-10.833	-3.9E-05	3.2803	-0.2334	-0.8857
583	0	Extremo 1A	-2.288	-28.292	-3.1E-05	1.7605	-0.2334	-6.0116
583	0.5	Extremo 1A	-2.288	-17.82	-3.1E-05	1.7605	-0.2334	5.5166
583	1	Extremo 1A	-2.288	-7.349	-3.1E-05	1.7605	-0.2334	11.8088
583	0	Extremo 2A	-2.288	-28.292	-3.1E-05	1.7605	-0.2334	-6.0116
583	0.5	Extremo 2A	-2.288	-17.82	-3.1E-05	1.7605	-0.2334	5.5165
583	1	Extremo 2A	-2.288	-7.348	-3.1E-05	1.7605	-0.2334	11.8087
584	0	Extremo 1A	-2.288	-23.763	-2.5E-05	1.0086	-0.2334	7.1365
584	0.5	Extremo 1A	-2.288	-13.291	-2.5E-05	1.0086	-0.2334	16.4001
584	1	Extremo 1A	-2.288	-2.819	-2.5E-05	1.0086	-0.2334	20.4278
584	0	Extremo 2A	-2.288	-23.763	-2.5E-05	1.0086	-0.2334	7.1365
584	0.5	Extremo 2A	-2.288	-13.291	-2.5E-05	1.0086	-0.2334	16.4
584	1	Extremo 2A	-2.288	-2.819	-2.5E-05	1.0086	-0.2334	20.4276
585	0	Extremo 1A	-2.288	-19.182	-2E-05	0.6099	-0.2334	17.0612
585	0.5	Extremo 1A	-2.288	-8.71	-2E-05	0.6099	-0.2334	24.0343
585	1	Extremo 1A	-2.288	1.762	-2E-05	0.6099	-0.2334	25.7714
585	0	Extremo 2A	-2.288	-19.182	-2E-05	0.6099	-0.2334	17.0611
585	0.5	Extremo 2A	-2.288	-8.71	-2E-05	0.6099	-0.2334	24.0341
585	1	Extremo 2A	-2.288	1.762	-2E-05	0.6099	-0.2334	25.7712
586	0	Extremo 1A	-2.288	-14.728	-1.6E-05	0.3016	-0.2334	23.8194
586	0.5	Extremo 1A	-2.288	-4.256	-1.6E-05	0.3016	-0.2334	28.5656
586	1	Extremo 1A	-2.288	6.216	-1.6E-05	0.3016	-0.2334	28.0758
586	0	Extremo 2A	-2.288	-14.728	-1.6E-05	0.3016	-0.2334	23.8192
586	0.5	Extremo 2A	-2.288	-4.256	-1.6E-05	0.3016	-0.2334	28.5653
586	1	Extremo 2A	-2.288	6.216	-1.6E-05	0.3016	-0.2334	28.0755
587	0	Extremo 1A	-2.288	-10.359	-1.3E-05	-0.00024	-0.2334	27.4674
587	0.5	Extremo 1A	-2.288	0.113	-1.3E-05	-0.00024	-0.2334	30.0291
587	1	Extremo 1A	-2.288	10.585	-1.3E-05	-0.00024	-0.2334	27.3548
587	0	Extremo 2A	-2.288	-10.359	-1.3E-05	-0.00024	-0.2334	27.4672
587	0.5	Extremo 2A	-2.288	0.113	-1.3E-05	-0.00024	-0.2334	30.0288
587	1	Extremo 2A	-2.288	10.585	-1.3E-05	-0.00024	-0.2334	27.3544
588	0	Extremo 1A	-2.288	-5.99	-1E-05	-0.302	-0.2334	28.0512
588	0.5	Extremo 1A	-2.288	4.482	-1E-05	-0.302	-0.2334	28.4281
588	1	Extremo 1A	-2.288	14.954	-1E-05	-0.302	-0.2334	23.5691
588	0	Extremo 2A	-2.288	-5.99	-1E-05	-0.302	-0.2334	28.0509
588	0.5	Extremo 2A	-2.288	4.482	-1E-05	-0.302	-0.2334	28.4278
588	1	Extremo 2A	-2.288	14.954	-1E-05	-0.302	-0.2334	23.5687
589	0	Extremo 1A	-2.288	-1.534	-8.2E-06	-0.6104	-0.2334	25.6102
589	0.5	Extremo 1A	-2.288	8.937	-8.2E-06	-0.6104	-0.2334	23.7594
589	1	Extremo 1A	-2.288	19.409	-8.2E-06	-0.6104	-0.2334	16.6727
589	0	Extremo 2A	-2.288	-1.534	-8.2E-06	-0.6104	-0.2334	25.6098
589	0.5	Extremo 2A	-2.288	8.938	-8.2E-06	-0.6104	-0.2334	23.7589
589	1	Extremo 2A	-2.288	19.409	-8.2E-06	-0.6104	-0.2334	16.6722
590	0	Extremo 1A	-2.288	3.049	-6.5E-06	-1.0107	-0.2334	20.1295
590	0.5	Extremo 1A	-2.288	13.521	-6.5E-06	-1.0107	-0.2334	15.9871
590	1	Extremo 1A	-2.288	23.993	-6.5E-06	-1.0107	-0.2334	6.6088
590	0	Extremo 2A	-2.288	3.049	-6.5E-06	-1.0107	-0.2334	20.129
590	0.5	Extremo 2A	-2.288	13.521	-6.5E-06	-1.0107	-0.2334	15.9866
590	1	Extremo 2A	-2.288	23.993	-6.5E-06	-1.0107	-0.2334	6.6082
591	0	Extremo 1A	-2.288	7.578	-5.2E-06	-1.7685	-0.2334	11.3701
591	0.5	Extremo 1A	-2.288	18.05	-5.2E-06	-1.7685	-0.2334	4.963
591	1	Extremo 1A	-2.288	28.522	-5.2E-06	-1.7685	-0.2334	-6.6799
591	0	Extremo 2A	-2.288	7.578	-5.2E-06	-1.7685	-0.2334	11.3695
591	0.5	Extremo 2A	-2.288	18.05	-5.2E-06	-1.7685	-0.2334	4.9624
591	1	Extremo 2A	-2.288	28.522	-5.2E-06	-1.7685	-0.2334	-6.6806
592	0	Extremo 1A	-2.287	11.051	-4.1E-06	-3.3029	-0.2334	-1.4771
592	0.5	Extremo 1A	-2.287	21.523	-4.1E-06	-3.3029	-0.2334	-9.6204
592	1	Extremo 1A	-2.287	31.994	-4.1E-06	-3.3029	-0.2334	-22.9996
592	0	Extremo 2A	-2.287	11.051	-4.1E-06	-3.3029	-0.2334	-1.4777
592	0.5	Extremo 2A	-2.287	21.523	-4.1E-06	-3.3029	-0.2334	-9.6211
592	1	Extremo 2A	-2.287	31.995	-4.1E-06	-3.3029	-0.2334	-23.0004
593	0	Extremo 1A	-2.287	10.208	-3.3E-06	-5.3346	-0.2334	-19.8089
593	0.5	Extremo 1A	-2.287	20.68	-3.3E-06	-5.3346	-0.2334	-27.5308
593	1	Extremo 1A	-2.287	31.152	-3.3E-06	-5.3346	-0.2334	-40.4886
593	0	Extremo 2A	-2.287	10.208	-3.3E-06	-5.3347	-0.2334	-19.8096
593	0.5	Extremo 2A	-2.287	20.68	-3.3E-06	-5.3347	-0.2334	-27.5315
593	1	Extremo 2A	-2.287	31.152	-3.3E-06	-5.3347	-0.2334	-40.4894
594	0	Extremo 1A	-2.287	-1.293	-2.6E-06	-4.3648	-0.2334	-42.1521
594	0.5	Extremo 1A	-2.287	9.178	-2.6E-06	-4.3648	-0.2334	-44.1233
594	1	Extremo 1A	-2.287	19.65	-2.6E-06	-4.3648	-0.2334	-51.3305
594	0	Extremo 2A	-2.287	-1.294	-2.6E-06	-4.3648	-0.2334	-42.1529
594	0.5	Extremo 2A	-2.287	9.178	-2.6E-06	-4.3648	-0.2334	-44.1241
594	1	Extremo 2A	-2.287	19.65	-2.6E-06	-4.3648	-0.2334	-51.3313
595	0	Extremo 1A	-2.287	-19.568	-2.1E-06	4.3637	-0.2334	-51.3152
595	0.5	Extremo 1A	-2.287	-9.096	-2.1E-06	4.3637	-0.2334	-44.149
595	1	Extremo 1A	-2.287	1.375	-2.1E-06	4.3637	-0.2334	-42.2187
595	0	Extremo 2A	-2.287	-19.569	-2.1E-06	4.3637	-0.2334	-51.316
595	0.5	Extremo 2A	-2.287	-9.097	-2.1E-06	4.3637	-0.2334	-44.1497
595	1	Extremo 2A	-2.287	1.375	-2.1E-06	4.3637	-0.2334	-42.2193
596	0	Extremo 1A	-2.287	-31.07	-1.6E-06	5.3336	-0.2334	-40.5245
596	0.5	Extremo 1A	-2.287	-20.598	-1.6E-06	5.3336	-0.2334	-27.6077
596	1	Extremo 1A	-2.287	-10.126	-1.6E-06	5.3336	-0.2334	-19.9268
596	0	Extremo 2A	-2.287	-31.07	-1.6E-06	5.3336	-0.2334	-40.5252
596	0.5	Extremo 2A	-2.287	-20.598	-1.6E-06	5.3336	-0.2334	-27.6082
596	1	Extremo 2A	-2.287	-10.126	-1.6E-06	5.3336	-0.2334	-19.9271
597	0	Extremo 1A	-2.287	-31.912	-1.3E-06	3.3019	-0.2334	-23.0868
597	0.5	Extremo 1A	-2.287	-21.44	-1.3E-06	3.3019	-0.2334	-9.7486
597	1	Extremo 1A	-2.287	-10.969	-1.3E-06	3.3019	-0.2334	-1.6464
597	0	Extremo 2A	-2.287	-31.913	-1.3E-06	3.3019	-0.2334	-23.0872

597	0.5	Extremo 2A	-2.287	-21.441	-1.3E-06	3.3019	-0.2334	-9.7488
597	1	Extremo 2A	-2.287	-10.969	-1.3E-06	3.3019	-0.2334	-1.6463
598	0	Extremo 1A	-2.287	-28.44	-1E-06	1.7676	-0.2334	-6.8184
598	0.5	Extremo 1A	-2.287	-17.968	-1E-06	1.7676	-0.2334	4.7836
598	1	Extremo 1A	-2.287	-7.496	-1E-06	1.7676	-0.2334	11.1495
598	0	Extremo 2A	-2.287	-28.44	-1E-06	1.7676	-0.2334	-6.8185
598	0.5	Extremo 2A	-2.287	-17.968	-1E-06	1.7676	-0.2334	4.7837
598	1	Extremo 2A	-2.287	-7.496	-1E-06	1.7676	-0.2334	11.1498
599	0	Extremo 1A	-2.287	-23.91	-8.2E-07	1.0098	-0.2334	6.4192
599	0.5	Extremo 1A	-2.287	-13.438	-8.2E-07	1.0098	-0.2334	15.7564
599	1	Extremo 1A	-2.287	-2.967	-8.2E-07	1.0098	-0.2334	19.8576
599	0	Extremo 2A	-2.287	-23.911	-8.2E-07	1.0098	-0.2334	6.4194
599	0.5	Extremo 2A	-2.287	-13.439	-8.2E-07	1.0098	-0.2334	15.7568
599	1	Extremo 2A	-2.287	-2.967	-8.2E-07	1.0098	-0.2334	19.8582
600	0	Extremo 1A	-2.287	-19.327	-6.5E-07	0.6097	-0.2334	16.432
600	0.5	Extremo 1A	-2.287	-8.855	-6.5E-07	0.6097	-0.2334	23.4775
600	1	Extremo 1A	-2.287	1.617	-6.5E-07	0.6097	-0.2334	25.287
600	0	Extremo 2A	-2.287	-19.327	-6.5E-07	0.6097	-0.2334	16.4324
600	0.5	Extremo 2A	-2.287	-8.855	-6.5E-07	0.6097	-0.2334	23.4781
600	1	Extremo 2A	-2.287	1.616	-6.5E-07	0.6097	-0.2334	25.2878
601	0	Extremo 1A	-2.287	-14.871	-5.1E-07	0.3015	-0.2334	23.2775
601	0.5	Extremo 1A	-2.287	-4.399	-5.1E-07	0.3015	-0.2334	28.0951
601	1	Extremo 1A	-2.287	6.073	-5.1E-07	0.3015	-0.2334	27.6767
601	0	Extremo 2A	-2.287	-14.872	-5.1E-07	0.3015	-0.2334	23.2782
601	0.5	Extremo 2A	-2.287	-4.4	-5.1E-07	0.3015	-0.2334	28.096
601	1	Extremo 2A	-2.287	6.072	-5.1E-07	0.3015	-0.2334	27.6779
602	0	Extremo 1A	-2.287	-10.501	-4E-07	5.1E-05	-0.2334	27.0125
602	0.5	Extremo 1A	-2.287	-0.029	-4E-07	5.1E-05	-0.2334	29.645
602	1	Extremo 1A	-2.287	10.443	-4E-07	5.1E-05	-0.2334	27.0416
602	0	Extremo 2A	-2.287	-10.501	-4E-07	5.1E-05	-0.2334	27.0134
602	0.5	Extremo 2A	-2.287	-0.03	-4E-07	5.1E-05	-0.2334	29.6461
602	1	Extremo 2A	-2.287	10.442	-4E-07	5.1E-05	-0.2334	27.0429
603	0	Extremo 1A	-2.287	-6.131	-3.2E-07	-0.3014	-0.2334	27.683
603	0.5	Extremo 1A	-2.287	4.341	-3.2E-07	-0.3014	-0.2334	28.1306
603	1	Extremo 1A	-2.287	14.813	-3.2E-07	-0.3014	-0.2334	23.3421
603	0	Extremo 2A	-2.287	-6.131	-3.2E-07	-0.3014	-0.2334	27.6843
603	0.5	Extremo 2A	-2.287	4.34	-3.2E-07	-0.3014	-0.2334	28.132
603	1	Extremo 2A	-2.287	14.812	-3.2E-07	-0.3014	-0.2334	23.3438
604	0	Extremo 1A	-2.287	-1.676	-2.5E-07	-0.6096	-0.2334	25.3286
604	0.5	Extremo 1A	-2.287	8.796	-2.5E-07	-0.6096	-0.2334	23.5484
604	1	Extremo 1A	-2.287	19.268	-2.5E-07	-0.6096	-0.2334	16.5323
604	0	Extremo 2A	-2.287	-1.676	-2.5E-07	-0.6096	-0.2334	25.33
604	0.5	Extremo 2A	-2.287	8.796	-2.5E-07	-0.6096	-0.2334	23.5501
604	1	Extremo 2A	-2.287	19.268	-2.5E-07	-0.6096	-0.2334	16.5342
605	0	Extremo 1A	-2.287	2.907	-2E-07	-1.0093	-0.2334	19.9346
605	0.5	Extremo 1A	-2.287	13.379	-2E-07	-1.0093	-0.2334	15.863
605	1	Extremo 1A	-2.287	23.851	-2E-07	-1.0093	-0.2334	6.5554
605	0	Extremo 2A	-2.287	2.907	-2E-07	-1.0093	-0.2334	19.9363
605	0.5	Extremo 2A	-2.287	13.379	-2E-07	-1.0093	-0.2334	15.865
605	1	Extremo 2A	-2.287	23.851	-2E-07	-1.0093	-0.2334	6.5576
606	0	Extremo 1A	-2.287	7.437	-1.6E-07	-1.7655	-0.2334	11.2628
606	0.5	Extremo 1A	-2.287	17.909	-1.6E-07	-1.7655	-0.2334	4.9264
606	1	Extremo 1A	-2.287	28.381	-1.6E-07	-1.7655	-0.2334	-6.6459
606	0	Extremo 2A	-2.287	7.436	-1.6E-07	-1.7654	-0.2334	11.2648
606	0.5	Extremo 2A	-2.287	17.908	-1.6E-07	-1.7654	-0.2334	4.9287
606	1	Extremo 2A	-2.287	28.38	-1.6E-07	-1.7654	-0.2334	-6.6434
607	0	Extremo 1A	-2.287	10.913	-1.2E-07	-3.296	-0.2334	-1.4936
607	0.5	Extremo 1A	-2.287	21.384	-1.2E-07	-3.296	-0.2334	-9.5679
607	1	Extremo 1A	-2.287	31.856	-1.2E-07	-3.296	-0.2334	-22.8781
607	0	Extremo 2A	-2.287	10.912	-1.2E-07	-3.2959	-0.2334	-1.4913
607	0.5	Extremo 2A	-2.287	21.384	-1.2E-07	-3.2959	-0.2334	-9.5654
607	1	Extremo 2A	-2.287	31.856	-1.2E-07	-3.2959	-0.2334	-22.8754
608	0	Extremo 1A	-2.287	10.084	-9.8E-08	-5.3222	-0.2334	-19.7278
608	0.5	Extremo 1A	-2.287	20.556	-9.8E-08	-5.3222	-0.2334	-27.388
608	1	Extremo 1A	-2.287	31.028	-9.8E-08	-5.3222	-0.2334	-40.2842
608	0	Extremo 2A	-2.287	10.084	-9.8E-08	-5.3221	-0.2334	-19.7251
608	0.5	Extremo 2A	-2.287	20.556	-9.8E-08	-5.3221	-0.2334	-27.3852
608	1	Extremo 2A	-2.287	31.028	-9.8E-08	-5.3221	-0.2334	-40.2812
609	0	Extremo 1A	-2.287	-1.375	-7.7E-08	-4.3539	-0.2334	-41.97
609	0.5	Extremo 1A	-2.287	9.097	-7.7E-08	-4.3539	-0.2334	-43.9003
609	1	Extremo 1A	-2.287	19.568	-7.7E-08	-4.3539	-0.2334	-51.0666
609	0	Extremo 2A	-2.287	-1.375	-7.7E-08	-4.3538	-0.2334	-41.9668
609	0.5	Extremo 2A	-2.287	9.097	-7.7E-08	-4.3538	-0.2334	-43.8973
609	1	Extremo 2A	-2.287	19.569	-7.7E-08	-4.3538	-0.2334	-51.0637
610	0	Extremo 1A	-2.287	-19.592	-6.1E-08	4.3542	-0.2334	-51.071
610	0.5	Extremo 1A	-2.287	-9.12	-6.1E-08	4.3542	-0.2334	-43.8931
610	1	Extremo 1A	-2.287	1.352	-6.1E-08	4.3542	-0.2334	-41.9511
610	0	Extremo 2A	-2.287	-19.591	-6E-08	4.3541	-0.2334	-51.0678
610	0.5	Extremo 2A	-2.287	-9.119	-6E-08	4.3541	-0.2334	-43.8904
610	1	Extremo 2A	-2.287	1.353	-6E-08	4.3541	-0.2334	-41.9489
611	0	Extremo 1A	-2.287	-31.052	-4.8E-08	5.3225	-0.2334	-40.274
611	0.5	Extremo 1A	-2.287	-20.58	-4.8E-08	5.3225	-0.2334	-27.3662
611	1	Extremo 1A	-2.287	-10.108	-4.8E-08	5.3225	-0.2334	-19.6943
611	0	Extremo 2A	-2.287	-31.05	-4.7E-08	5.3223	-0.2334	-40.2715
611	0.5	Extremo 2A	-2.287	-20.578	-4.7E-08	5.3223	-0.2334	-27.3645
611	1	Extremo 2A	-2.287	-10.106	-4.7E-08	5.3223	-0.2334	-19.6933
612	0	Extremo 1A	-2.287	-31.88	-3.8E-08	3.2963	-0.2334	-22.8534
612	0.5	Extremo 1A	-2.287	-21.408	-3.8E-08	3.2963	-0.2334	-9.5315
612	1	Extremo 1A	-2.287	-10.936	-3.8E-08	3.2963	-0.2334	-1.4456
612	0	Extremo 2A	-2.287	-31.878	-3.7E-08	3.2962	-0.2334	-22.8519
612	0.5	Extremo 2A	-2.287	-21.406	-3.7E-08	3.2962	-0.2334	-9.5309
612	1	Extremo 2A	-2.287	-10.934	-3.7E-08	3.2962	-0.2334	-1.4458
613	0	Extremo 1A	-2.287	-28.404	-3E-08	1.7657	-0.2334	-6.6066
613	0.5	Extremo 1A	-2.287	-17.932	-3E-08	1.7657	-0.2334	4.9773
613	1	Extremo 1A	-2.287	-7.46	-3E-08	1.7657	-0.2334	11.3254
613	0	Extremo 2A	-2.287	-28.402	-2.9E-08	1.7657	-0.2334	-6.6062
613	0.5	Extremo 2A	-2.287	-17.93	-2.9E-08	1.7657	-0.2334	4.977
613	1	Extremo 2A	-2.287	-7.458	-2.9E-08	1.7657	-0.2334	11.3242
614	0	Extremo 1A	-2.287	-23.874	-2.3E-08	1.0095	-0.2334	6.6092
614	0.5	Extremo 1A	-2.287	-13.403	-2.3E-08	1.0095	-0.2334	15.9284
614	1	Extremo 1A	-2.287	-2.931	-2.3E-08	1.0095	-0.2334	20.0117
614	0	Extremo 2A	-2.287	-23.873	-2.3E-08	1.0095	-0.2334	6.6086
614	0.5	Extremo 2A	-2.287	-13.401	-2.3E-08	1.0095	-0.2334	15.927
614	1	Extremo 2A	-2.287	-2.929	-2.3E-08	1.0095	-0.2334	20.0095
615	0	Extremo 1A	-2.287	-19.292	-1.8E-08	0.6098	-0.2334	16.6006
615	0.5	Extremo 1A	-2.287	-8.82	-1.8E-08	0.6098	-0.2334	23.6284
615	1	Extremo 1A	-2.287	1.652	-1.8E-08	0.6098	-0.2334	25.4203
615	0	Extremo 2A	-2.287	-19.29	-1.7E-08	0.6098	-0.2334	16.599
615	0.5	Extremo 2A	-2.287	-8.818	-1.7E-08	0.6098	-0.2334	23.626
615	1	Extremo 2A	-2.287	1.654	-1.7E-08	0.6098	-0.2334	25.417
616	0	Extremo 1A	-2.287	-14.836	-1.4E-08	0.3016	-0.2334	23.4248
616	0.5	Extremo 1A	-2.287	-4.364	-1.4E-08	0.3016	-0.2334	28.225
616	1	Extremo 1A	-2.287	6.107	-1.4E-08	0.3016	-0.2334	27.7893
616	0	Extremo 2A	-2.287	-14.835	-1.3E-08	0.3016	-0.2334	23.4222
616	0.5	Extremo 2A	-2.287	-4.363	-1.3E-08	0.3016	-0.2334	28.2216
616	1	Extremo 2A	-2.287	6.109	-1.3E-08	0.3016	-0.2334	27.785
617	0	Extremo 1A	-2.287	-10.467	-1.1E-08	-9E-06	-0.2334	27.1386
617	0.5	Extremo 1A	-2.287	0.00536	-1.1E-08	-9E-06	-0.2334	29.7539
617	1	Extremo 1A	-2.287	10.477	-1.1E-08	-9E-06	-0.2334	27.1333
617	0	Extremo 2A	-2.287	-10.465	-9.7E-09	-1.2E-05	-0.2334	27.135
617	0.5	Extremo 2A	-2.287	0.00702	-9.7E-09	-1.2E-05	-0.2334	29.7495
617	1	Extremo 2A	-2.287	10.479	-9.7E-09	-1.2E-05	-0.2334	27.128
618	0	Extremo 1A	-2.287	-6.097	-8.6E-09	-0.3016	-0.2334	27.7881
618	0.5	Extremo 1A	-2.287	4.375	-8.6E-09	-0.3016	-0.2334	28.2185
618	1	Extremo 1A	-2.287	14.847	-8.6E-09	-0.3016	-0.2334	23.4129
618	0	Extremo 2A	-2.287	-6.095	-6.8E-09	-0.3016	-0.2334	27.7835
618	0.5	Extremo 2A	-2.287	4.377	-6.8E-09	-0.3016	-0.2334	28.213
618	1	Extremo 2A	-2.287	14.849	-6.8E-09	-0.3016	-0.2334	23.4066
619	0	Extremo 1A	-2.287	-1.641	-6.6E-09	-0.6098	-0.2334	25.4126
619	0.5	Extremo 1A	-2.287	8.831	-6.6E-09	-0.6098	-0.2334	23.6153
619	1	Extremo 1A	-2.287	19.302	-6.6E-09	-0.6098	-0.2334	16.5821
619	0	Extremo 2A	-2.287	-1.64	-4.4E-09	-0.6098	-0.2334	25.407
619	0.5	Extremo 2A	-2.287	8.832	-4.4E-09	-0.6098	-0.2334	23.6088
619	1	Extremo 2A	-2.287	19.304	-4.4E-09	-0.6098	-0.2334	16.5748
620	0	Extremo 1A	-2.287	2.942	-5E-09	-1.0096	-0.2334	19.9975
620	0.5	Extremo 1A	-2.287	13.413	-5E-09	-1.0096	-0.2334	15.9088
620	1	Extremo 1A	-2.287	23.885	-5E-09	-1.0096	-0.2334	6.5841
620	0	Extremo 2A	-2.287	2.943	-2.2E-09	-1.0096	-0.2334	19.9909
620	0.5	Extremo 2A	-2.287	13.415	-2.2E-09	-1.0096	-0.2334	15.9013
620	1	Extremo 2A	-2.287	23.887	-2.2E-09	-1.0096	-0.2334	6.5757
621	0	Extremo 1A	-2.287	7.471	-3.7E-09	-1.7661	-0.2334	11.3045
621	0.5	Extremo 1A	-2.287	17.943	-3.7E-09	-1.7661	-0.2334	4.951
621	1	Extremo 1A	-2.287	28.415	-3.7E-09	-1.7661	-0.2334	-6.6384
621	0	Extremo 2A	-2.287	7.473	-1.1E-10	-1.7662	-0.2334	11.2968

621	0.5	Extremo 2A	-2.287	17.945	-1.1E-10	-1.7662	-0.2334	4.9425
621	1	Extremo 2A	-2.287	28.416	-1.1E-10	-1.7662	-0.2334	-6.6478
622	0	Extremo 1A	-2.287	10.946	-2.6E-09	-3.2973	-0.2334	-1.4738
622	0.5	Extremo 1A	-2.287	21.418	-2.6E-09	-3.2973	-0.2334	-9.5649
622	1	Extremo 1A	-2.287	31.89	-2.6E-09	-3.2973	-0.2334	-22.8919
622	0	Extremo 2A	-2.287	10.948	1.9E-09	-3.2976	-0.2334	-1.4826
622	0.5	Extremo 2A	-2.287	21.42	1.9E-09	-3.2976	-0.2334	-9.5745
622	1	Extremo 2A	-2.287	31.892	1.9E-09	-3.2976	-0.2334	-22.9023
623	0	Extremo 1A	-2.287	10.115	-1.7E-09	-5.3246	-0.2334	-19.731
623	0.5	Extremo 1A	-2.287	20.587	-1.7E-09	-5.3246	-0.2334	-27.4067
623	1	Extremo 1A	-2.287	31.059	-1.7E-09	-5.3246	-0.2334	-40.3183
623	0	Extremo 2A	-2.287	10.116	4.1E-09	-5.3251	-0.2334	-19.7414
623	0.5	Extremo 2A	-2.287	20.588	4.1E-09	-5.3251	-0.2334	-27.4175
623	1	Extremo 2A	-2.287	31.06	4.1E-09	-5.3251	-0.2334	-40.3296
624	0	Extremo 1A	-2.287	-1.352	-9.2E-10	-4.356	-0.2334	-41.9969
624	0.5	Extremo 1A	-2.287	9.12	-9.2E-10	-4.356	-0.2334	-43.9389
624	1	Extremo 1A	-2.287	19.592	-9.2E-10	-4.356	-0.2334	-51.1168
624	0	Extremo 2A	-2.287	-1.353	6.4E-09	-4.3564	-0.2334	-42.0089
624	0.5	Extremo 2A	-2.287	9.119	6.4E-09	-4.3564	-0.2334	-43.9504
624	1	Extremo 2A	-2.287	19.591	6.4E-09	-4.3564	-0.2334	-51.1278
625	0	Extremo 1A	-2.287	-19.579	-1.9E-10	4.3558	-0.2334	-51.1145
625	0.5	Extremo 1A	-2.287	-9.107	-1.9E-10	4.3558	-0.2334	-43.9428
625	1	Extremo 1A	-2.287	1.364	-1.9E-10	4.3558	-0.2334	-42.0071
625	0	Extremo 2A	-2.287	-19.583	9.1E-09	4.3563	-0.2334	-51.1264
625	0.5	Extremo 2A	-2.287	-9.111	9.1E-09	4.3563	-0.2334	-43.9529
625	1	Extremo 2A	-2.287	1.361	9.1E-09	4.3563	-0.2334	-42.0154
626	0	Extremo 1A	-2.287	-31.047	5.2E-10	5.3244	-0.2334	-40.3237
626	0.5	Extremo 1A	-2.287	-20.575	5.2E-10	5.3244	-0.2334	-27.4184
626	1	Extremo 1A	-2.287	-10.103	5.2E-10	5.3244	-0.2334	-19.7489
626	0	Extremo 2A	-2.287	-31.052	1.2E-08	5.325	-0.2334	-40.333
626	0.5	Extremo 2A	-2.287	-20.58	1.2E-08	5.325	-0.2334	-27.4249
626	1	Extremo 2A	-2.287	-10.108	1.2E-08	5.325	-0.2334	-19.7527
627	0	Extremo 1A	-2.287	-31.878	1.2E-09	3.2972	-0.2334	-22.9051
627	0.5	Extremo 1A	-2.287	-21.406	1.2E-09	3.2972	-0.2334	-9.5843
627	1	Extremo 1A	-2.287	-10.934	1.2E-09	3.2972	-0.2334	-1.4994
627	0	Extremo 2A	-2.287	-31.884	1.6E-08	3.2975	-0.2334	-22.9107
627	0.5	Extremo 2A	-2.287	-21.412	1.6E-08	3.2975	-0.2334	-9.5868
627	1	Extremo 2A	-2.287	-10.94	1.6E-08	3.2975	-0.2334	-1.4989
628	0	Extremo 1A	-2.287	-28.402	2E-09	1.766	-0.2334	-6.6594
628	0.5	Extremo 1A	-2.287	-17.93	2E-09	1.766	-0.2334	4.9238
628	1	Extremo 1A	-2.287	-7.459	2E-09	1.766	-0.2334	11.271
628	0	Extremo 2A	-2.287	-28.409	2.1E-08	1.7661	-0.2334	-6.6611
628	0.5	Extremo 2A	-2.287	-17.937	2.1E-08	1.7661	-0.2334	4.9252
628	1	Extremo 2A	-2.287	-7.465	2.1E-08	1.7661	-0.2334	11.2756
629	0	Extremo 1A	-2.287	-23.873	2.9E-09	1.0095	-0.2334	6.5553
629	0.5	Extremo 1A	-2.287	-13.401	2.9E-09	1.0095	-0.2334	15.8738
629	1	Extremo 1A	-2.287	-2.929	2.9E-09	1.0095	-0.2334	19.9563
629	0	Extremo 2A	-2.287	-23.879	2.7E-08	1.0095	-0.2334	6.5575
629	0.5	Extremo 2A	-2.287	-13.407	2.7E-08	1.0095	-0.2334	15.8791
629	1	Extremo 2A	-2.287	-2.935	2.7E-08	1.0095	-0.2334	19.9648
630	0	Extremo 1A	-2.287	-19.29	3.9E-09	0.6097	-0.2334	16.5456
630	0.5	Extremo 1A	-2.287	-8.818	3.9E-09	0.6097	-0.2334	23.5726
630	1	Extremo 1A	-2.287	1.654	3.9E-09	0.6097	-0.2334	25.3636
630	0	Extremo 2A	-2.287	-19.296	3.4E-08	0.6097	-0.2334	16.5516
630	0.5	Extremo 2A	-2.287	-8.824	3.4E-08	0.6097	-0.2334	23.5817
630	1	Extremo 2A	-2.287	1.648	3.4E-08	0.6097	-0.2334	25.3759
631	0	Extremo 1A	-2.287	-14.834	5.2E-09	0.3015	-0.2334	23.3687
631	0.5	Extremo 1A	-2.287	-4.363	5.2E-09	0.3015	-0.2334	28.168
631	1	Extremo 1A	-2.287	6.109	5.2E-09	0.3015	-0.2334	27.7313
631	0	Extremo 2A	-2.287	-14.841	4.4E-08	0.3015	-0.2334	23.3786
631	0.5	Extremo 2A	-2.287	-4.369	4.4E-08	0.3015	-0.2334	28.181
631	1	Extremo 2A	-2.287	6.103	4.4E-08	0.3015	-0.2334	27.7475
632	0	Extremo 1A	-2.287	-10.465	6.7E-09	-1.3E-05	-0.2334	27.0814
632	0.5	Extremo 1A	-2.287	0.00732	6.7E-09	-1.3E-05	-0.2334	29.6957
632	1	Extremo 1A	-2.287	10.479	6.7E-09	-1.3E-05	-0.2334	27.0741
632	0	Extremo 2A	-2.287	-10.471	5.5E-08	-1.5E-07	-0.2334	27.0951
632	0.5	Extremo 2A	-2.287	0.00102	5.5E-08	-1.5E-07	-0.2334	29.7126
632	1	Extremo 2A	-2.287	10.473	5.5E-08	-1.5E-07	-0.2334	27.0941
633	0	Extremo 1A	-2.287	-6.095	8.6E-09	-0.3015	-0.2334	27.7298
633	0.5	Extremo 1A	-2.287	4.377	8.6E-09	-0.3015	-0.2334	28.1591
633	1	Extremo 1A	-2.287	14.849	8.6E-09	-0.3015	-0.2334	23.3525
633	0	Extremo 2A	-2.287	-6.101	7E-08	-0.3015	-0.2334	27.7473
633	0.5	Extremo 2A	-2.287	4.371	7E-08	-0.3015	-0.2334	28.1798
633	1	Extremo 2A	-2.287	14.843	7E-08	-0.3015	-0.2334	23.3763
634	0	Extremo 1A	-2.287	-1.639	1.1E-08	-0.6097	-0.2334	25.3531
634	0.5	Extremo 1A	-2.287	8.833	1.1E-08	-0.6097	-0.2334	23.5547
634	1	Extremo 1A	-2.287	19.305	1.1E-08	-0.6097	-0.2334	16.5204
634	0	Extremo 2A	-2.287	-1.646	8.9E-08	-0.6097	-0.2334	25.3744
634	0.5	Extremo 2A	-2.287	8.826	8.9E-08	-0.6097	-0.2334	23.5792
634	1	Extremo 2A	-2.287	19.298	8.9E-08	-0.6097	-0.2334	16.5481
635	0	Extremo 1A	-2.287	2.944	1.4E-08	-1.0096	-0.2334	19.9369
635	0.5	Extremo 1A	-2.287	13.416	1.4E-08	-1.0096	-0.2334	15.847
635	1	Extremo 1A	-2.287	23.888	1.4E-08	-1.0096	-0.2334	6.5211
635	0	Extremo 2A	-2.287	2.937	1.1E-07	-1.0095	-0.2334	19.9621
635	0.5	Extremo 2A	-2.287	13.409	1.1E-07	-1.0095	-0.2334	15.8754
635	1	Extremo 2A	-2.287	23.881	1.1E-07	-1.0095	-0.2334	6.5527
636	0	Extremo 1A	-2.287	7.473	1.8E-08	-1.7665	-0.2334	11.2425
636	0.5	Extremo 1A	-2.287	17.945	1.8E-08	-1.7665	-0.2334	4.8878
636	1	Extremo 1A	-2.287	28.417	1.8E-08	-1.7665	-0.2334	-6.7028
636	0	Extremo 2A	-2.287	7.467	1.4E-07	-1.7662	-0.2334	11.2716
636	0.5	Extremo 2A	-2.287	17.939	1.4E-07	-1.7662	-0.2334	4.9202
636	1	Extremo 2A	-2.287	28.411	1.4E-07	-1.7662	-0.2334	-6.6671
637	0	Extremo 1A	-2.287	10.948	2.2E-08	-3.2987	-0.2334	-1.5379
637	0.5	Extremo 1A	-2.287	21.42	2.2E-08	-3.2987	-0.2334	-9.6298
637	1	Extremo 1A	-2.287	31.892	2.2E-08	-3.2987	-0.2334	-22.9576
637	0	Extremo 2A	-2.287	10.942	1.8E-07	-3.2977	-0.2334	-1.5043
637	0.5	Extremo 2A	-2.287	21.414	1.8E-07	-3.2977	-0.2334	-9.5932
637	1	Extremo 2A	-2.287	31.886	1.8E-07	-3.2977	-0.2334	-22.918
638	0	Extremo 1A	-2.287	10.113	2.8E-08	-5.3273	-0.2334	-19.799
638	0.5	Extremo 1A	-2.287	20.585	2.8E-08	-5.3273	-0.2334	-27.4736
638	1	Extremo 1A	-2.287	31.057	2.8E-08	-5.3273	-0.2334	-40.3842
638	0	Extremo 2A	-2.287	10.11	2.3E-07	-5.3254	-0.2334	-19.7597
638	0.5	Extremo 2A	-2.287	20.582	2.3E-07	-5.3254	-0.2334	-27.4326
638	1	Extremo 2A	-2.287	31.054	2.3E-07	-5.3254	-0.2334	-40.3414
639	0	Extremo 1A	-2.287	-1.365	3.6E-08	-4.3583	-0.2334	-42.0696
639	0.5	Extremo 1A	-2.287	9.107	3.6E-08	-4.3583	-0.2334	-44.0053
639	1	Extremo 1A	-2.287	19.579	3.6E-08	-4.3583	-0.2334	-51.177
639	0	Extremo 2A	-2.287	-1.361	2.9E-07	-4.3567	-0.2334	-42.0241
639	0.5	Extremo 2A	-2.287	9.111	2.9E-07	-4.3567	-0.2334	-43.9616
639	1	Extremo 2A	-2.287	19.583	2.9E-07	-4.3567	-0.2334	-51.1351
640	0	Extremo 1A	-2.287	-19.606	4.6E-08	4.3587	-0.2334	-51.1821
640	0.5	Extremo 1A	-2.287	-9.135	4.6E-08	4.3587	-0.2334	-43.9968
640	1	Extremo 1A	-2.287	1.337	4.6E-08	4.3587	-0.2334	-42.0475
640	0	Extremo 2A	-2.287	-19.593	3.6E-07	4.3568	-0.2334	-51.137
640	0.5	Extremo 2A	-2.287	-9.121	3.6E-07	4.3568	-0.2334	-43.9585
640	1	Extremo 2A	-2.287	1.351	3.6E-07	4.3568	-0.2334	-42.016
641	0	Extremo 1A	-2.287	-31.084	5.8E-08	5.3276	-0.2334	-40.3723
641	0.5	Extremo 1A	-2.287	-20.612	5.8E-08	5.3276	-0.2334	-27.4481
641	1	Extremo 1A	-2.287	-10.141	5.8E-08	5.3276	-0.2334	-19.7599
641	0	Extremo 2A	-2.287	-31.064	4.6E-07	5.3255	-0.2334	-40.3372
641	0.5	Extremo 2A	-2.287	-20.592	4.6E-07	5.3255	-0.2334	-27.4233
641	1	Extremo 2A	-2.287	-10.12	4.6E-07	5.3255	-0.2334	-19.7454
642	0	Extremo 1A	-2.287	-31.919	7.3E-08	3.299	-0.2334	-22.9287
642	0.5	Extremo 1A	-2.287	-21.447	7.3E-08	3.299	-0.2334	-9.5872
642	1	Extremo 1A	-2.287	-10.975	7.3E-08	3.299	-0.2334	-1.4817
642	0	Extremo 2A	-2.287	-31.896	5.8E-07	3.2978	-0.2334	-22.9075
642	0.5	Extremo 2A	-2.287	-21.424	5.8E-07	3.2978	-0.2334	-9.5776
642	1	Extremo 2A	-2.287	-10.952	5.8E-07	3.2978	-0.2334	-1.4837
643	0	Extremo 1A	-2.287	-28.444	9.2E-08	1.7668	-0.2334	-6.6569
643	0.5	Extremo 1A	-2.287	-17.973	9.2E-08	1.7668	-0.2334	4.9474
643	1	Extremo 1A	-2.287	-7.501	9.2E-08	1.7668	-0.2334	11.3157
643	0	Extremo 2A	-2.287	-28.421	7.3E-07	1.7662	-0.2334	-6.6504
643	0.5	Extremo 2A	-2.287	-17.949	7.3E-07	1.7662	-0.2334	4.942
643	1	Extremo 2A	-2.287	-7.477	7.3E-07	1.7662	-0.2334	11.2984
644	0	Extremo 1A	-2.287	-23.915	1.2E-07	1.0099	-0.2334	6.584
644	0.5	Extremo 1A	-2.287	-13.443	1.2E-07	1.0099	-0.2334	15.9235
644	1	Extremo 1A	-2.287	-2.971	1.2E-07	1.0099	-0.2334	20.0272
644	0	Extremo 2A	-2.287	-23.891	9.1E-07	1.0096	-0.2334	6.5756
644	0.5	Extremo 2A	-2.287	-13.419	9.1E-07	1.0096	-0.2334	15.9033
644	1	Extremo 2A	-2.287	-2.948	9.1E-07	1.0096	-0.2334	19.9951
645	0	Extremo 1A	-2.287	-19.332	1.5E-07	0.6099	-0.2334	16.6002
645	0.5	Extremo 1A	-2.287	-8.86	1.5E-07	0.6099	-0.2334	23.6483
645	1	Extremo 1A	-2.287	1.612	1.5E-07	0.6099	-0.2334	25.4604
645	0	Extremo 2A	-2.287	-19.308	1.2E-06	0.6098	-0.2334	16.5772

645	0.5	Extremo 2A	-2.287	-8.836	1.2E-06	0.6098	-0.2334	23.6134
645	1	Extremo 2A	-2.287	1.635	1.2E-06	0.6098	-0.2334	25.4137
646	0	Extremo 1A	-2.287	-14.877	1.9E-07	0.3017	-0.2334	23.4492
646	0.5	Extremo 1A	-2.287	-4.405	1.9E-07	0.3017	-0.2334	28.2696
646	1	Extremo 1A	-2.287	6.067	1.9E-07	0.3017	-0.2334	27.854
646	0	Extremo 2A	-2.287	-14.853	1.4E-06	0.3016	-0.2334	23.4116
646	0.5	Extremo 2A	-2.287	-4.381	1.4E-06	0.3016	-0.2334	28.2202
646	1	Extremo 2A	-2.287	6.091	1.4E-06	0.3016	-0.2334	27.7928
647	0	Extremo 1A	-2.287	-10.507	2.4E-07	6.7E-05	-0.2334	27.1877
647	0.5	Extremo 1A	-2.287	-0.035	2.4E-07	6.7E-05	-0.2334	29.8232
647	1	Extremo 1A	-2.287	10.437	2.4E-07	6.7E-05	-0.2334	27.2227
647	0	Extremo 2A	-2.287	-10.483	1.8E-06	-1.8E-05	-0.2334	27.1355
647	0.5	Extremo 2A	-2.287	-0.011	1.8E-06	-1.8E-05	-0.2334	29.7591
647	1	Extremo 2A	-2.287	10.461	1.8E-06	-1.8E-05	-0.2334	27.1468
648	0	Extremo 1A	-2.287	-6.137	3E-07	-0.3016	-0.2334	27.8617
648	0.5	Extremo 1A	-2.287	4.335	3E-07	-0.3016	-0.2334	28.3124
648	1	Extremo 1A	-2.287	14.806	3E-07	-0.3016	-0.2334	23.5271
648	0	Extremo 2A	-2.287	-6.113	2.3E-06	-0.3016	-0.2334	27.7951
648	0.5	Extremo 2A	-2.287	4.359	2.3E-06	-0.3016	-0.2334	28.2338
648	1	Extremo 2A	-2.287	14.83	2.3E-06	-0.3016	-0.2334	23.4365
649	0	Extremo 1A	-2.287	-1.682	3.8E-07	-0.6098	-0.2334	25.5105
649	0.5	Extremo 1A	-2.287	8.789	3.8E-07	-0.6098	-0.2334	23.7338
649	1	Extremo 1A	-2.287	19.261	3.8E-07	-0.6098	-0.2334	16.7211
649	0	Extremo 2A	-2.287	-1.658	2.9E-06	-0.6098	-0.2334	25.4296
649	0.5	Extremo 2A	-2.287	8.814	2.9E-06	-0.6098	-0.2334	23.6407
649	1	Extremo 2A	-2.287	19.286	2.9E-06	-0.6098	-0.2334	16.6158
650	0	Extremo 1A	-2.287	2.9	4.7E-07	-1.0092	-0.2334	20.12
650	0.5	Extremo 1A	-2.287	13.372	4.7E-07	-1.0092	-0.2334	16.0521
650	1	Extremo 1A	-2.287	23.844	4.7E-07	-1.0092	-0.2334	6.7482
650	0	Extremo 2A	-2.287	2.925	3.6E-06	-1.0094	-0.2334	20.0247
650	0.5	Extremo 2A	-2.287	13.397	3.6E-06	-1.0094	-0.2334	15.9443
650	1	Extremo 2A	-2.287	23.868	3.6E-06	-1.0094	-0.2334	6.6281
651	0	Extremo 1A	-2.287	7.429	6E-07	-1.7643	-0.2334	11.4523
651	0.5	Extremo 1A	-2.287	17.901	6E-07	-1.7643	-0.2334	5.1197
651	1	Extremo 1A	-2.287	28.373	6E-07	-1.7643	-0.2334	-6.4489
651	0	Extremo 2A	-2.287	7.454	4.5E-06	-1.7653	-0.2334	11.3421
651	0.5	Extremo 2A	-2.287	17.926	4.5E-06	-1.7653	-0.2334	4.997
651	1	Extremo 2A	-2.287	28.398	4.5E-06	-1.7653	-0.2334	-6.584
652	0	Extremo 1A	-2.287	10.908	7.5E-07	-3.2919	-0.2334	-1.2976
652	0.5	Extremo 1A	-2.287	21.379	7.5E-07	-3.2919	-0.2334	-9.3694
652	1	Extremo 1A	-2.287	31.851	7.5E-07	-3.2919	-0.2334	-22.677
652	0	Extremo 2A	-2.288	10.931	5.6E-06	-3.2953	-0.2334	-1.4247
652	0.5	Extremo 2A	-2.288	21.402	5.6E-06	-3.2953	-0.2334	-9.508
652	1	Extremo 2A	-2.288	31.874	5.6E-06	-3.2953	-0.2334	-22.8272
653	0	Extremo 1A	-2.287	10.091	9.5E-07	-5.314	-0.2334	-19.52
653	0.5	Extremo 1A	-2.287	20.563	9.5E-07	-5.314	-0.2334	-27.1833
653	1	Extremo 1A	-2.287	31.034	9.5E-07	-5.314	-0.2334	-40.0825
653	0	Extremo 2A	-2.288	10.105	6.9E-06	-5.3207	-0.2334	-19.6682
653	0.5	Extremo 2A	-2.288	20.576	6.9E-06	-5.3207	-0.2334	-27.3384
653	1	Extremo 2A	-2.288	31.048	6.9E-06	-5.3207	-0.2334	-40.2446
654	0	Extremo 1A	-2.287	-1.337	1.2E-06	-4.3469	-0.2334	-41.7478
654	0.5	Extremo 1A	-2.287	9.135	1.2E-06	-4.3469	-0.2334	-43.6972
654	1	Extremo 1A	-2.287	19.606	1.2E-06	-4.3469	-0.2334	-50.8824
654	0	Extremo 2A	-2.288	-1.35	8.6E-06	-4.3524	-0.2334	-41.9192
654	0.5	Extremo 2A	-2.288	9.122	8.6E-06	-4.3524	-0.2334	-43.8623
654	1	Extremo 2A	-2.288	19.594	8.6E-06	-4.3524	-0.2334	-51.0414
655	0	Extremo 1A	-2.287	-19.509	1.5E-06	4.3454	-0.2334	-50.8643
655	0.5	Extremo 1A	-2.287	-9.037	1.5E-06	4.3454	-0.2334	-43.7278
655	1	Extremo 1A	-2.287	1.435	1.5E-06	4.3454	-0.2334	-41.8273
655	0	Extremo 2A	-2.288	-19.559	1.1E-05	4.3533	-0.2334	-51.0338
655	0.5	Extremo 2A	-2.288	-9.087	1.1E-05	4.3533	-0.2334	-43.8725
655	1	Extremo 2A	-2.288	1.385	1.1E-05	4.3533	-0.2334	-41.9471
656	0	Extremo 1A	-2.287	-30.937	1.9E-06	5.3125	-0.2334	-40.1257
656	0.5	Extremo 1A	-2.287	-20.465	1.9E-06	5.3125	-0.2334	-27.2752
656	1	Extremo 1A	-2.287	-9.993	1.9E-06	5.3125	-0.2334	-19.6607
656	0	Extremo 2A	-2.288	-31.013	1.3E-05	5.3216	-0.2334	-40.2573
656	0.5	Extremo 2A	-2.288	-20.541	1.3E-05	5.3216	-0.2334	-27.3689
656	1	Extremo 2A	-2.288	-10.069	1.3E-05	5.3216	-0.2334	-19.7164
657	0	Extremo 1A	-2.287	-31.754	2.4E-06	3.2905	-0.2334	-22.7815
657	0.5	Extremo 1A	-2.287	-21.282	2.4E-06	3.2905	-0.2334	-9.5226
657	1	Extremo 1A	-2.287	-10.81	2.4E-06	3.2905	-0.2334	-1.4997
657	0	Extremo 2A	-2.288	-31.839	1.6E-05	3.2962	-0.2334	-22.8602
657	0.5	Extremo 2A	-2.288	-21.367	1.6E-05	3.2962	-0.2334	-9.5587
657	1	Extremo 2A	-2.288	-10.895	1.6E-05	3.2962	-0.2334	-1.4932
658	0	Extremo 1A	-2.287	-28.275	3E-06	1.7629	-0.2334	-6.6146
658	0.5	Extremo 1A	-2.287	-17.803	3E-06	1.7629	-0.2334	4.9051
658	1	Extremo 1A	-2.287	-7.332	3E-06	1.7629	-0.2334	11.1888
658	0	Extremo 2A	-2.288	-28.362	2E-05	1.7662	-0.2334	-6.6374
658	0.5	Extremo 2A	-2.288	-17.891	2E-05	1.7662	-0.2334	4.9259
658	1	Extremo 2A	-2.288	-7.419	2E-05	1.7662	-0.2334	11.2532
659	0	Extremo 1A	-2.287	-23.746	3.7E-06	1.008	-0.2334	6.5213
659	0.5	Extremo 1A	-2.287	-13.274	3.7E-06	1.008	-0.2334	15.7762
659	1	Extremo 1A	-2.287	-2.802	3.7E-06	1.008	-0.2334	19.7952
659	0	Extremo 2A	-2.288	-23.833	2.5E-05	1.0103	-0.2334	6.5544
659	0.5	Extremo 2A	-2.288	-13.361	2.5E-05	1.0103	-0.2334	15.8529
659	1	Extremo 2A	-2.288	-2.889	2.5E-05	1.0103	-0.2334	19.9154
660	0	Extremo 1A	-2.288	-19.163	4.6E-06	0.6087	-0.2334	16.4332
660	0.5	Extremo 1A	-2.288	-8.691	4.6E-06	0.6087	-0.2334	23.3967
660	1	Extremo 1A	-2.288	1.781	4.6E-06	0.6087	-0.2334	25.1244
660	0	Extremo 2A	-2.288	-19.25	3E-05	0.6107	-0.2334	16.5219
660	0.5	Extremo 2A	-2.288	-8.778	3E-05	0.6107	-0.2334	23.5289
660	1	Extremo 2A	-2.288	1.694	3E-05	0.6107	-0.2334	25.3
661	0	Extremo 1A	-2.288	-14.708	5.8E-06	0.3008	-0.2334	23.1783
661	0.5	Extremo 1A	-2.288	-4.236	5.8E-06	0.3008	-0.2334	27.9142
661	1	Extremo 1A	-2.288	6.236	5.8E-06	0.3008	-0.2334	27.4141
661	0	Extremo 2A	-2.288	-14.795	3.7E-05	0.3025	-0.2334	23.3223
661	0.5	Extremo 2A	-2.288	-4.323	3.7E-05	0.3025	-0.2334	28.1017
661	1	Extremo 2A	-2.288	6.149	3.7E-05	0.3025	-0.2334	27.6451
662	0	Extremo 1A	-2.288	-10.337	7.2E-06	-0.00043	-0.2334	26.8133
662	0.5	Extremo 1A	-2.288	0.135	7.2E-06	-0.00043	-0.2334	29.364
662	1	Extremo 1A	-2.288	10.606	7.2E-06	-0.00043	-0.2334	26.6787
662	0	Extremo 2A	-2.288	-10.425	4.5E-05	0.0008	-0.2334	27.0121
662	0.5	Extremo 2A	-2.288	0.047	4.5E-05	0.0008	-0.2334	29.6066
662	1	Extremo 2A	-2.288	10.519	4.5E-05	0.0008	-0.2334	26.9652
663	0	Extremo 1A	-2.288	-5.966	9E-06	-0.3016	-0.2334	27.3844
663	0.5	Extremo 1A	-2.288	4.506	9E-06	-0.3016	-0.2334	27.7496
663	1	Extremo 1A	-2.288	14.977	9E-06	-0.3016	-0.2334	22.8788
663	0	Extremo 2A	-2.288	-6.055	5.4E-05	-0.301	-0.2334	27.6376
663	0.5	Extremo 2A	-2.288	4.417	5.4E-05	-0.301	-0.2334	28.0471
663	1	Extremo 2A	-2.288	14.889	5.4E-05	-0.301	-0.2335	23.2207
664	0	Extremo 1A	-2.288	-1.509	1.1E-05	-0.6095	-0.2334	24.931
664	0.5	Extremo 1A	-2.288	8.963	1.1E-05	-0.6095	-0.2334	23.0675
664	1	Extremo 1A	-2.288	19.435	1.1E-05	-0.6095	-0.2334	15.9681
664	0	Extremo 2A	-2.288	-1.6	6.5E-05	-0.6099	-0.2334	25.2377
664	0.5	Extremo 2A	-2.288	8.872	6.5E-05	-0.6099	-0.2334	23.4196
664	1	Extremo 2A	-2.288	19.344	6.5E-05	-0.6099	-0.2335	16.3656
665	0	Extremo 1A	-2.288	3.076	1.4E-05	-1.0104	-0.2334	19.4379
665	0.5	Extremo 1A	-2.288	13.548	1.4E-05	-1.0104	-0.2334	15.2817
665	1	Extremo 1A	-2.288	24.02	1.4E-05	-1.0104	-0.2334	5.8896
665	0	Extremo 2A	-2.288	2.983	7.8E-05	-1.0113	-0.2334	19.7974
665	0.5	Extremo 2A	-2.288	13.455	7.8E-05	-1.0113	-0.2334	15.6881
665	1	Extremo 2A	-2.288	23.926	7.8E-05	-1.0113	-0.2335	6.3429
666	0	Extremo 1A	-2.288	7.607	1.7E-05	-1.7722	-0.2334	10.6637
666	0.5	Extremo 1A	-2.288	18.078	1.7E-05	-1.7722	-0.2334	4.2425
666	1	Extremo 1A	-2.288	28.55	1.7E-05	-1.7722	-0.2334	-7.4147
666	0	Extremo 2A	-2.288	7.51	9.2E-05	-1.7717	-0.2334	11.0766
666	0.5	Extremo 2A	-2.288	17.982	9.2E-05	-1.7717	-0.2334	4.7037
666	1	Extremo 2A	-2.288	28.454	9.2E-05	-1.7717	-0.2335	-6.9051
667	0	Extremo 1A	-2.288	11.071	2.1E-05	-3.3168	-0.2334	-2.2069
667	0.5	Extremo 1A	-2.288	21.543	2.1E-05	-3.3168	-0.2334	-10.3602
667	1	Extremo 1A	-2.288	32.015	2.1E-05	-3.3168	-0.2334	-23.7495
667	0	Extremo 2A	-2.288	10.977	0.00011	-3.3108	-0.2334	-1.7356
667	0.5	Extremo 2A	-2.288	21.449	0.00011	-3.3108	-0.2334	-9.842
667	1	Extremo 2A	-2.288	31.921	0.00011	-3.3108	-0.2335	-23.1843
668	0	Extremo 1A	-2.288	10.188	2.6E-05	-5.3632	-0.2334	-20.581
668	0.5	Extremo 1A	-2.288	20.659	2.6E-05	-5.3632	-0.2334	-28.2927
668	1	Extremo 1A	-2.288	31.131	2.6E-05	-5.3632	-0.2334	-41.2404
668	0	Extremo 2A	-2.288	10.12	0.00012	-5.349	-0.2334	-20.0385
668	0.5	Extremo 2A	-2.288	20.592	0.00012	-5.349	-0.2334	-27.7167
668	1	Extremo 2A	-2.288	31.064	0.00012	-5.349	-0.2335	-40.6309
669	0	Extremo 1A	-2.288	-1.43	3.2E-05	-4.3879	-0.2334	-42.9755
669	0.5	Extremo 1A	-2.288	9.042	3.2E-05	-4.3879	-0.2334	-44.8784
669	1	Extremo 1A	-2.288	19.514	3.2E-05	-4.3879	-0.2334	-52.0174
669	0	Extremo 2A	-2.288	-1.411	0.00014	-4.3823	-0.2333	-42.3572

669	0.5	Extremo 2A	-2.288	9.061	0.00014	-4.3823	-0.2334	-44.2698
669	1	Extremo 2A	-2.288	19.533	0.00014	-4.3823	-0.2335	-51.4182
670	0	Extremo 1A	-2.288	-19.869	3.9E-05	4.3995	-0.2334	-52.079
670	0.5	Extremo 1A	-2.288	-9.397	3.9E-05	4.3995	-0.2334	-44.7625
670	1	Extremo 1A	-2.288	1.075	3.9E-05	4.3995	-0.2334	-42.6819
670	0	Extremo 2A	-2.288	-19.726	0.00016	4.3532	-0.2333	-51.4765
670	0.5	Extremo 2A	-2.288	-9.254	0.00016	4.3532	-0.2334	-44.2315
670	1	Extremo 2A	-2.288	1.218	0.00016	4.3532	-0.2335	-42.2225
671	0	Extremo 1A	-2.288	-31.487	4.7E-05	5.3746	-0.2334	-41.0702
671	0.5	Extremo 1A	-2.288	-21.015	4.7E-05	5.3746	-0.2334	-27.9449
671	1	Extremo 1A	-2.288	-10.543	4.7E-05	5.3746	-0.2334	-20.0554
671	0	Extremo 2A	-2.289	-31.257	0.00017	5.3199	-0.2333	-40.6127
671	0.5	Extremo 2A	-2.289	-20.785	0.00017	5.3199	-0.2334	-27.6021
671	1	Extremo 2A	-2.289	-10.313	0.00017	5.3199	-0.2335	-19.8274
672	0	Extremo 1A	-2.288	-32.37	5.7E-05	3.328	-0.2334	-23.3475
672	0.5	Extremo 1A	-2.288	-21.898	5.7E-05	3.328	-0.2334	-9.7805
672	1	Extremo 1A	-2.288	-11.426	5.7E-05	3.328	-0.2335	-1.4493
672	0	Extremo 2A	-2.289	-32.113	0.00018	3.2819	-0.2333	-23.0896
672	0.5	Extremo 2A	-2.289	-21.642	0.00018	3.2819	-0.2334	-9.6509
672	1	Extremo 2A	-2.289	-11.17	0.00018	3.2819	-0.2335	-1.448
673	0	Extremo 1A	-2.288	-28.906	6.9E-05	1.783	-0.2334	-6.7812
673	0.5	Extremo 1A	-2.288	-18.434	6.9E-05	1.783	-0.2334	5.054
673	1	Extremo 1A	-2.288	-7.963	6.9E-05	1.783	-0.2335	11.6533
673	0	Extremo 2A	-2.289	-28.646	0.00017	1.7431	-0.2333	-6.7337
673	0.5	Extremo 2A	-2.289	-18.174	0.00017	1.7431	-0.2334	4.9715
673	1	Extremo 2A	-2.289	-7.702	0.00017	1.7431	-0.2335	11.4407
674	0	Extremo 1A	-2.288	-24.377	8.2E-05	1.0207	-0.2334	6.7542
674	0.5	Extremo 1A	-2.288	-13.905	8.2E-05	1.0207	-0.2334	16.3248
674	1	Extremo 1A	-2.288	-3.433	8.2E-05	1.0207	-0.2335	20.6594
674	0	Extremo 2A	-2.29	-24.119	0.00014	0.9834	-0.2333	6.5914
674	0.5	Extremo 2A	-2.29	-13.647	0.00014	0.9834	-0.2334	16.0327
674	1	Extremo 2A	-2.29	-3.175	0.00014	0.9834	-0.2334	20.2381
675	0	Extremo 1A	-2.288	-19.793	9.8E-05	0.6188	-0.2334	17.0634
675	0.5	Extremo 1A	-2.288	-9.321	9.8E-05	0.6188	-0.2334	24.3419
675	1	Extremo 1A	-2.288	1.151	9.8E-05	0.6188	-0.2335	26.3845
675	0	Extremo 2A	-2.29	-19.535	8.6E-05	0.5832	-0.2333	16.692
675	0.5	Extremo 2A	-2.29	-9.063	8.6E-05	0.5832	-0.2333	23.8416
675	1	Extremo 2A	-2.29	1.409	8.6E-05	0.5832	-0.2334	25.7553
676	0	Extremo 1A	-2.288	-15.338	0.00011	0.3093	-0.2334	24.2037
676	0.5	Extremo 1A	-2.288	-4.866	0.00011	0.3093	-0.2334	29.2548
676	1	Extremo 1A	-2.288	5.606	0.00011	0.3093	-0.2335	29.0699
676	0	Extremo 2A	-2.291	-15.078	-1.9E-05	0.2768	-0.2333	23.6265
676	0.5	Extremo 2A	-2.291	-4.606	-1.9E-05	0.2768	-0.2333	28.5475
676	1	Extremo 2A	-2.291	5.866	-1.9E-05	0.2768	-0.2333	28.2326
677	0	Extremo 1A	-2.288	-10.971	0.00013	0.0056	-0.2334	28.2316
677	0.5	Extremo 1A	-2.288	-0.499	0.00013	0.0056	-0.2334	31.0991
677	1	Extremo 1A	-2.288	9.973	0.00013	0.0056	-0.2335	28.7306
677	0	Extremo 2A	-2.291	-10.704	-0.0002	-0.0204	-0.2334	27.4529
677	0.5	Extremo 2A	-2.291	-0.233	-0.0002	-0.0204	-0.2333	30.1872
677	1	Extremo 2A	-2.291	10.239	-0.0002	-0.0204	-0.2332	27.6855
678	0	Extremo 1A	-2.288	-6.607	0.00015	-0.2992	-0.2333	29.1923
678	0.5	Extremo 1A	-2.288	3.865	0.00015	-0.2992	-0.2334	29.8778
678	1	Extremo 1A	-2.288	14.337	0.00015	-0.2992	-0.2335	25.3274
678	0	Extremo 2A	-2.292	-6.327	-0.00048	-0.3136	-0.2334	28.2201
678	0.5	Extremo 2A	-2.292	4.144	-0.00048	-0.3136	-0.2332	28.7659
678	1	Extremo 2A	-2.292	14.616	-0.00048	-0.3136	-0.2329	24.0757
679	0	Extremo 1A	-2.288	-2.162	0.00017	-0.6114	-0.2333	27.1242
679	0.5	Extremo 1A	-2.288	8.31	0.00017	-0.6114	-0.2334	25.5873
679	1	Extremo 1A	-2.288	18.782	0.00017	-0.6114	-0.2335	18.8144
679	0	Extremo 2A	-2.292	-1.859	-0.00091	-0.6058	-0.2335	25.972
679	0.5	Extremo 2A	-2.292	8.613	-0.00091	-0.6058	-0.2331	24.2833
679	1	Extremo 2A	-2.292	19.085	-0.00091	-0.6058	-0.2326	17.3587
680	0	Extremo 1A	-2.289	2.406	0.00019	-1.0124	-0.2333	22.0136
680	0.5	Extremo 1A	-2.289	12.878	0.00019	-1.0124	-0.2334	18.1927
680	1	Extremo 1A	-2.289	23.349	0.00019	-1.0124	-0.2335	9.1359
680	0	Extremo 2A	-2.293	2.751	-0.00155	-0.9756	-0.2337	20.7035
680	0.5	Extremo 2A	-2.293	13.223	-0.00155	-0.9756	-0.2329	16.7099
680	1	Extremo 2A	-2.293	23.695	-0.00155	-0.9756	-0.2322	7.4804
681	0	Extremo 1A	-2.289	6.922	0.0002	-1.7585	-0.2333	13.6301
681	0.5	Extremo 1A	-2.289	17.394	0.0002	-1.7585	-0.2334	7.5511
681	1	Extremo 1A	-2.289	27.866	0.0002	-1.7585	-0.2335	-3.7639
681	0	Extremo 2A	-2.294	7.335	-0.0025	-1.6773	-0.234	12.1939
681	0.5	Extremo 2A	-2.294	17.807	-0.0025	-1.6773	-0.2328	5.9084
681	1	Extremo 2A	-2.294	28.279	-0.0025	-1.6773	-0.2315	-5.613
682	0	Extremo 1A	-2.289	10.419	0.0002	-3.2537	-0.2333	1.1934
682	0.5	Extremo 1A	-2.289	20.891	0.0002	-3.2537	-0.2334	-6.6344
682	1	Extremo 1A	-2.289	31.363	0.0002	-3.2537	-0.2335	-19.698
682	0	Extremo 2A	-2.295	10.925	-0.00387	-3.1159	-0.2344	-0.3316
682	0.5	Extremo 2A	-2.295	21.397	-0.00387	-3.1159	-0.2325	-8.4121
682	1	Extremo 2A	-2.295	31.869	-0.00387	-3.1159	-0.2306	-21.7285
683	0	Extremo 1A	-2.29	9.751	0.00018	-5.2281	-0.2333	-16.6451
683	0.5	Extremo 1A	-2.29	20.223	0.00018	-5.2281	-0.2334	-24.1387
683	1	Extremo 1A	-2.29	30.695	0.00018	-5.2281	-0.2335	-36.8682
683	0	Extremo 2A	-2.295	10.343	-0.00583	-5.0174	-0.235	-18.2247
683	0.5	Extremo 2A	-2.295	20.815	-0.00583	-5.0174	-0.2321	-26.0144
683	1	Extremo 2A	-2.295	31.287	-0.00583	-5.0174	-0.2292	-39.04
684	0	Extremo 1A	-2.29	-1.209	0.00013	-4.3023	-0.2333	-38.4619
684	0.5	Extremo 1A	-2.29	9.263	0.00013	-4.3023	-0.2333	-40.4752
684	1	Extremo 1A	-2.29	19.735	0.00013	-4.3023	-0.2334	-47.7245
684	0	Extremo 2A	-2.295	-0.619	-0.00861	-3.9652	-0.2359	-40.0399
684	0.5	Extremo 2A	-2.295	9.853	-0.00861	-3.9652	-0.2316	-42.3483
684	1	Extremo 2A	-2.295	20.325	-0.00861	-3.9652	-0.2273	-49.8926
685	0	Extremo 1A	-2.291	-18.711	3.1E-05	4.1178	-0.2333	-47.6528
685	0.5	Extremo 1A	-2.291	-8.239	3.1E-05	4.1178	-0.2333	-40.9153
685	1	Extremo 1A	-2.291	2.233	3.1E-05	4.1178	-0.2333	-39.4138
685	0	Extremo 2A	-2.295	-18.19	-0.012	4.6818	-0.2372	-48.9719
685	0.5	Extremo 2A	-2.295	-7.718	-0.012	4.6818	-0.231	-42.4949
685	1	Extremo 2A	-2.295	2.754	-0.012	4.6818	-0.2247	-41.2539
686	0	Extremo 1A	-2.291	-29.67	-0.00013	5.0443	-0.2333	-37.676
686	0.5	Extremo 1A	-2.291	-19.199	-0.00013	5.0443	-0.2333	-25.4587
686	1	Extremo 1A	-2.291	-8.727	-0.00013	5.0443	-0.2332	-18.4774
686	0	Extremo 2A	-2.293	-29.156	-0.018	5.731	-0.239	-38.4148
686	0.5	Extremo 2A	-2.293	-18.684	-0.018	5.731	-0.2301	-26.4549
686	1	Extremo 2A	-2.293	-8.212	-0.018	5.731	-0.2211	-19.731
687	0	Extremo 1A	-2.292	-30.337	-0.0004	3.0717	-0.2334	-21.3843
687	0.5	Extremo 1A	-2.292	-19.865	-0.0004	3.0717	-0.2332	-8.8338
687	1	Extremo 1A	-2.292	-9.393	-0.0004	3.0717	-0.233	-1.5193
687	0	Extremo 2A	-2.289	-29.745	-0.025	3.823	-0.2415	-21.4029
687	0.5	Extremo 2A	-2.289	-19.273	-0.025	3.823	-0.2289	-9.1484
687	1	Extremo 2A	-2.289	-8.801	-0.025	3.823	-0.2162	-2.1299
688	0	Extremo 1A	-2.293	-26.836	-0.00082	1.5799	-0.2335	-6.3267
688	0.5	Extremo 1A	-2.293	-16.364	-0.00082	1.5799	-0.2331	4.4733
688	1	Extremo 1A	-2.293	-5.892	-0.00082	1.5799	-0.2327	10.0373
688	0	Extremo 2A	-2.282	-26.169	-0.035	2.3724	-0.245	-5.5941
688	0.5	Extremo 2A	-2.282	-15.697	-0.035	2.3724	-0.2273	4.8723
688	1	Extremo 2A	-2.282	-5.225	-0.035	2.3724	-0.2096	10.1029
689	0	Extremo 1A	-2.294	-22.313	-0.00144	0.8399	-0.2337	5.7
689	0.5	Extremo 1A	-2.294	-11.841	-0.00144	0.8399	-0.233	14.2386
689	1	Extremo 1A	-2.294	-1.369	-0.00144	0.8399	-0.2322	17.5411
689	0	Extremo 2A	-2.27	-21.61	-0.049	1.6499	-0.2497	7.1801
689	0.5	Extremo 2A	-2.27	-11.138	-0.049	1.6499	-0.2251	15.3669
689	1	Extremo 2A	-2.27	-0.666	-0.049	1.6499	-0.2006	18.3178
690	0	Extremo 1A	-2.295	-17.734	-0.00237	0.4495	-0.2339	14.5117
690	0.5	Extremo 1A	-2.295	-7.262	-0.00237	0.4495	-0.2328	20.7605
690	1	Extremo 1A	-2.295	3.21	-0.00237	0.4495	-0.2316	21.7734
690	0	Extremo 2A	-2.251	-17.042	-0.068	1.2451	-0.2562	16.7181
690	0.5	Extremo 2A	-2.251	-6.57	-0.068	1.2451	-0.2224	22.621
690	1	Extremo 2A	-2.251	3.902	-0.068	1.2451	-0.1885	23.2879
691	0	Extremo 1A	-2.295	-13.268	-0.00371	0.1562	-0.2343	20.1692
691	0.5	Extremo 1A	-2.295	-2.796	-0.00371	0.1562	-0.2325	24.1853
691	1	Extremo 1A	-2.295	7.676	-0.00371	0.1562	-0.2306	22.9655
691	0	Extremo 2A	-2.222	-12.643	-0.092	0.8955	-0.265	23.0596
691	0.5	Extremo 2A	-2.222	-2.171	-0.092	0.8955	-0.2188	26.763
691	1	Extremo 2A	-2.222	8.301	-0.092	0.8955	-0.1726	25.2306
692	0	Extremo 1A	-2.296	-8.868	-0.00564	-0.1162	-0.235	22.7373
692	0.5	Extremo 1A	-2.296	1.604	-0.00564	-0.1162	-0.2321	24.5532
692	1	Extremo 1A	-2.296	12.076	-0.00564	-0.1162	-0.2293	21.1331
692	0	Extremo 2A	-2.178	-8.382	-0.125	0.5105	-0.2768	26.2361
692	0.5	Extremo 2A	-2.178	2.09	-0.125	0.5105	-0.2142	27.8091
692	1	Extremo 2A	-2.178	12.562	-0.125	0.5105	-0.1516	24.1462
693	0	Extremo 1A	-2.296	-4.435	-0.00837	-0.3653	-0.2358	22.2773
693	0.5	Extremo 1A	-2.296	6.036	-0.00837	-0.3653	-0.2316	21.8771
693	1	Extremo 1A	-2.296	16.508	-0.00837	-0.3653	-0.2275	16.2409
693	0	Extremo 2A	-2.112	-4.196	-0.169	0.0707	-0.2929	26.2588

693	0.5	Extremo 2A	-2.112	6.276	-0.169	0.0707	-0.2085	25.7387
693	1	Extremo 2A	-2.112	16.748	-0.169	0.0707	-0.1241	19.9825
694	0	Extremo 1A	-2.296	0.134	-0.012	-0.5874	-0.2371	18.8533
694	0.5	Extremo 1A	-2.296	10.606	-0.012	-0.5874	-0.231	16.1684
694	1	Extremo 1A	-2.296	21.078	-0.012	-0.5874	-0.2249	8.2476
694	0	Extremo 2A	-2.016	-0.031	-0.226	-0.4484	-0.3143	23.1197
694	0.5	Extremo 2A	-2.016	10.441	-0.226	-0.4484	-0.2012	20.5169
694	1	Extremo 2A	-2.016	20.913	-0.226	-0.4484	-0.0881	12.6783
695	0	Extremo 1A	-2.294	4.91	-0.018	-0.8611	-0.2388	12.4828
695	0.5	Extremo 1A	-2.294	15.382	-0.018	-0.8611	-0.2301	7.41
695	1	Extremo 1A	-2.294	25.853	-0.018	-0.8611	-0.2213	-2.8988
695	0	Extremo 2A	-1.879	4.117	-0.301	-1.1511	-0.3417	16.7443
695	0.5	Extremo 2A	-1.879	14.589	-0.301	-1.1511	-0.1913	12.068
695	1	Extremo 2A	-1.879	25.06	-0.301	-1.1511	-0.041	2.1557
696	0	Extremo 1A	-2.29	9.729	-0.025	-1.4606	-0.2413	2.9517
696	0.5	Extremo 1A	-2.29	20.201	-0.025	-1.4606	-0.2289	-4.531
696	1	Extremo 1A	-2.29	30.673	-0.025	-1.4606	-0.2164	-17.2496
696	0	Extremo 2A	-1.688	8.028	-0.391	-2.315	-0.3716	6.8283
696	0.5	Extremo 2A	-1.688	18.499	-0.391	-2.315	-0.176	0.1966
696	1	Extremo 2A	-1.688	28.971	-0.391	-2.315	0.0195	-11.6711
697	0	Extremo 1A	-2.284	13.534	-0.035	-2.833	-0.2448	-10.5718
697	0.5	Extremo 1A	-2.284	24.006	-0.035	-2.833	-0.2273	-19.9567
697	1	Extremo 1A	-2.284	34.478	-0.035	-2.833	-0.2098	-34.5776
697	0	Extremo 2A	-1.437	10.666	-0.48	-4.3437	-0.3909	-7.4933
697	0.5	Extremo 2A	-1.437	21.138	-0.48	-4.3437	-0.1511	-15.4444
697	1	Extremo 2A	-1.437	31.61	-0.48	-4.3437	0.0887	-28.6313
698	0	Extremo 1A	-2.273	12.762	-0.049	-4.6732	-0.2495	-29.5775
698	0.5	Extremo 1A	-2.273	23.234	-0.049	-4.6732	-0.2251	-38.5767
698	1	Extremo 1A	-2.273	33.706	-0.049	-4.6732	-0.2008	-52.8118
698	0	Extremo 2A	-1.144	8.687	-0.519	-6.8447	-0.3764	-27.6192
698	0.5	Extremo 2A	-1.144	19.159	-0.519	-6.8447	-0.1167	-34.5806
698	1	Extremo 2A	-1.144	29.631	-0.519	-6.8447	0.143	-46.778
699	0	Extremo 1A	-2.254	0.395	-0.067	-3.1566	-0.2559	-52.4368
699	0.5	Extremo 1A	-2.254	10.867	-0.067	-3.1566	-0.2223	-55.2523
699	1	Extremo 1A	-2.254	21.339	-0.067	-3.1566	-0.1887	-63.3037
699	0	Extremo 2A	-0.851	-4.52	-0.48	-5.9308	-0.3222	-51.7603
699	0.5	Extremo 2A	-0.851	5.952	-0.48	-5.9308	-0.0824	-52.1184
699	1	Extremo 2A	-0.851	16.424	-0.48	-5.9308	0.1574	-57.7124
700	0	Extremo 1A	-2.226	-19.408	-0.092	6.9002	-0.2646	-60.2661
700	0.5	Extremo 1A	-2.226	-8.937	-0.092	6.9002	-0.2187	-53.1799
700	1	Extremo 1A	-2.226	1.535	-0.092	6.9002	-0.1728	-51.3296
700	0	Extremo 2A	-0.601	-24.613	-0.391	3.6075	-0.2529	-61.1097
700	0.5	Extremo 2A	-0.601	-14.141	-0.391	3.6075	-0.0574	-51.4211
700	1	Extremo 2A	-0.601	-3.669	-0.391	3.6075	0.1381	-46.9684
701	0	Extremo 1A	-2.183	-31.892	-0.125	8.3208	-0.2765	-45.7113
701	0.5	Extremo 1A	-2.183	-21.42	-0.125	8.3208	-0.2141	-32.3833
701	1	Extremo 1A	-2.183	-10.948	-0.125	8.3208	-0.1517	-24.2912
701	0	Extremo 2A	-0.41	-37.035	-0.3	4.8578	-0.1923	-48.3278
701	0.5	Extremo 2A	-0.41	-26.563	-0.3	4.8578	-0.0421	-32.4281
701	1	Extremo 2A	-0.41	-16.092	-0.3	4.8578	0.1082	-21.7644
702	0	Extremo 1A	-2.118	-32.925	-0.168	6.2701	-0.2925	-23.5633
702	0.5	Extremo 1A	-2.118	-22.453	-0.168	6.2701	-0.2083	-9.7186
702	1	Extremo 1A	-2.118	-11.982	-0.168	6.2701	-0.1241	-1.1099
702	0	Extremo 2A	-0.273	-37.827	-0.226	2.9162	-0.1452	-27.9584
702	0.5	Extremo 2A	-0.273	-27.355	-0.226	2.9162	-0.0322	-11.6629
702	1	Extremo 2A	-0.273	-16.883	-0.226	2.9162	0.0808	-0.6035
703	0	Extremo 1A	-2.024	-29.589	-0.226	4.5381	-0.3139	-2.5675
703	0.5	Extremo 1A	-2.024	-19.117	-0.226	4.5381	-0.201	9.609
703	1	Extremo 1A	-2.024	-8.645	-0.226	4.5381	-0.088	16.5496
703	0	Extremo 2A	-0.177	-34.035	-0.169	1.5094	-0.1092	-8.538
703	0.5	Extremo 2A	-0.177	-23.563	-0.169	1.5094	-0.025	5.8616
703	1	Extremo 2A	-0.177	-13.091	-0.169	1.5094	0.0593	15.0253
704	0	Extremo 1A	-1.888	-25.534	-0.301	3.3883	-0.3414	15.0744
704	0.5	Extremo 1A	-1.888	-15.062	-0.301	3.3883	-0.191	25.2233
704	1	Extremo 1A	-1.888	-4.59	-0.301	3.3883	-0.0406	30.1362
704	0	Extremo 2A	-0.111	-29.226	-0.125	0.899	-0.0817	7.8984
704	0.5	Extremo 2A	-0.111	-18.754	-0.125	0.899	-0.0192	19.8933
704	1	Extremo 2A	-0.111	-8.282	-0.125	0.899	0.0432	26.6522
705	0	Extremo 1A	-1.698	-21.918	-0.392	2.3466	-0.3714	28.9857
705	0.5	Extremo 1A	-1.698	-11.446	-0.392	2.3466	-0.1755	37.3268
705	1	Extremo 1A	-1.698	-0.974	-0.392	2.3466	0.0204	40.4318
705	0	Extremo 2A	-0.068	-24.455	-0.092	0.6232	-0.0607	21.1337
705	0.5	Extremo 2A	-0.068	-13.984	-0.092	0.6232	-0.0146	30.7435
705	1	Extremo 2A	-0.068	-3.512	-0.092	0.6232	0.0314	35.1172
706	0	Extremo 1A	-1.45	-18.945	-0.481	1.1601	-0.3909	39.1058
706	0.5	Extremo 1A	-1.45	-8.473	-0.481	1.1601	-0.1503	45.9605
706	1	Extremo 1A	-1.45	1.998	-0.481	1.1601	0.0903	47.5793
706	0	Extremo 2A	-0.039	-19.883	-0.067	0.404	-0.0447	31.2224
706	0.5	Extremo 2A	-0.039	-9.411	-0.067	0.404	-0.011	38.5457
706	1	Extremo 2A	-0.039	1.061	-0.067	0.404	0.0226	40.6331
707	0	Extremo 1A	-1.159	-16.411	-0.522	-0.1576	-0.3768	45.4995
707	0.5	Extremo 1A	-1.159	-5.939	-0.522	-0.1576	-0.1157	51.0869
707	1	Extremo 1A	-1.159	4.533	-0.522	-0.1576	0.1454	51.4385
707	0	Extremo 2A	-0.021	-15.435	-0.049	0.1615	-0.0326	38.2155
707	0.5	Extremo 2A	-0.021	-4.963	-0.049	0.1615	-0.0083	43.315
707	1	Extremo 2A	-0.021	5.509	-0.049	0.1615	0.0161	43.1784
708	0	Extremo 1A	-0.868	-13.86	-0.484	-1.4645	-0.3231	48.3723
708	0.5	Extremo 1A	-0.868	-3.388	-0.484	-1.4645	-0.0809	52.6845
708	1	Extremo 1A	-0.868	7.083	-0.484	-1.4645	0.1613	51.7607
708	0	Extremo 2A	-0.00948	-11.009	-0.035	-0.1061	-0.0236	42.1469
708	0.5	Extremo 2A	-0.00948	-0.537	-0.035	-0.1061	-0.0061	45.0334
708	1	Extremo 2A	-0.00948	9.935	-0.035	-0.1061	0.0113	42.6839
709	0	Extremo 1A	-0.62	-10.85	-0.399	-2.6176	-0.2548	47.9596
709	0.5	Extremo 1A	-0.62	-0.378	-0.399	-2.6176	-0.0554	50.7667
709	1	Extremo 1A	-0.62	10.094	-0.399	-2.6176	0.144	48.3379
709	0	Extremo 2A	-0.00324	-6.529	-0.025	-0.4081	-0.0169	43.025
709	0.5	Extremo 2A	-0.00324	3.943	-0.025	-0.4081	-0.0045	43.6717
709	1	Extremo 2A	-0.00324	14.414	-0.025	-0.4081	0.0079	39.0824
710	0	Extremo 1A	-0.431	-7.228	-0.313	-3.5767	-0.1959	44.3671
710	0.5	Extremo 1A	-0.431	3.244	-0.313	-3.5767	-0.0396	45.3633
710	1	Extremo 1A	-0.431	13.715	-0.313	-3.5767	0.1168	41.1235
710	0	Extremo 2A	-0.00026	-2.025	-0.017	-0.8222	-0.012	40.7675
710	0.5	Extremo 2A	-0.00026	8.447	-0.017	-0.8222	-0.0033	39.1622
710	1	Extremo 2A	-0.00026	18.918	-0.017	-0.8222	0.0054	32.3209
711	0	Extremo 1A	-0.294	-3.342	-0.245	-4.4151	-0.1518	37.4357
711	0.5	Extremo 1A	-0.294	7.13	-0.245	-4.4151	-0.0291	36.4888
711	1	Extremo 1A	-0.294	17.602	-0.245	-4.4151	0.0936	30.306
711	0	Extremo 2A	0.00056	2.115	-0.012	-1.4763	-0.0085	35.0531
711	0.5	Extremo 2A	0.00056	12.587	-0.012	-1.4763	-0.0024	31.3777
711	1	Extremo 2A	0.00056	23.058	-0.012	-1.4763	0.0037	22.4665
712	0	Extremo 1A	-0.196	-0.536	-0.201	-4.9239	-0.1212	26.7453
712	0.5	Extremo 1A	-0.196	9.936	-0.201	-4.9239	-0.0208	24.3951
712	1	Extremo 1A	-0.196	20.408	-0.201	-4.9239	0.0796	16.809
712	0	Extremo 2A	8.7E-05	4.53	-0.00905	-2.1585	-0.0063	25.3132
712	0.5	Extremo 2A	8.7E-05	15.002	-0.00905	-2.1585	-0.0018	20.4303
712	1	Extremo 2A	8.7E-05	25.474	-0.00905	-2.1585	0.0028	10.3115
713	0	Extremo 1A	-0.123	-1.407	-0.179	-3.5279	-0.1	13.0594
713	0.5	Extremo 1A	-0.123	9.065	-0.179	-3.5279	-0.0107	11.1449
713	1	Extremo 1A	-0.123	19.537	-0.179	-3.5279	0.0786	3.9945
713	0	Extremo 2A	-0.00085	2.567	-0.00795	-1.2312	-0.0051	12.2235
713	0.5	Extremo 2A	-0.00085	13.039	-0.00795	-1.2312	-0.0011	8.3219
713	1	Extremo 2A	-0.00085	23.511	-0.00795	-1.2312	0.0028	-0.8155
714	0	Extremo 1A	-0.059	-3.832	-0.159	1.4363	-0.0715	3.6733
714	0.5	Extremo 1A	-0.059	6.64	-0.159	1.4363	0.0081	2.9715
714	1	Extremo 1A	-0.059	17.111	-0.159	1.4363	0.0877	-2.9662
714	0	Extremo 2A	-0.00118	-1.712	-0.00816	3.0649	-0.004	3.1774
714	0.5	Extremo 2A	-0.00118	8.76	-0.00816	3.0649	5E-05	1.4155
714	1	Extremo 2A	-0.00118	19.232	-0.00816	3.0649	0.0041	-5.5824
715	0	Extremo 1A	-0.412	-12.552	0.461	-2.3901	0.2575	-2.5542
715	0.5	Extremo 1A	-0.412	-3.995	0.461	-2.3901	0.0272	1.5825
715	1	Extremo 1A	-0.412	4.561	0.461	-2.3901	-0.203	1.4411
715	0	Extremo 2A	-0.412	-12.552	0.461	-2.3901	0.2575	-2.5542
715	0.5	Extremo 2A	-0.412	-3.995	0.461	-2.3901	0.0272	1.5825
715	1	Extremo 2A	-0.412	4.561	0.461	-2.3901	-0.203	1.4411
716	0	Extremo 1A	-0.901	-10.208	0.482	-1.3211	0.2204	-0.1016
716	0.5	Extremo 1A	-0.901	-1.652	0.482	-1.3211	-0.0207	2.8635
716	1	Extremo 1A	-0.901	6.904	0.482	-1.3211	-0.2618	1.5504
716	0	Extremo 2A	-0.901	-10.208	0.482	-1.3211	0.2204	-0.1016
716	0.5	Extremo 2A	-0.901	-1.652	0.482	-1.3211	-0.0207	2.8635
716	1	Extremo 2A	-0.901	6.904	0.482	-1.3211	-0.2618	1.5504
717	0	Extremo 1A	-1.371	-9.655	0.394	-0.3728	0.1501	1.3615
717	0.5	Extremo 1A	-1.371	-1.099	0.394	-0.3728	-0.0468	4.0502
717	1	Extremo 1A	-1.371	7.457	0.394	-0.3728	-0.2436	2.4607
717	0	Extremo 2A	-1.371	-9.655	0.394	-0.3728	0.1501	1.3615

717	0.5	Extremo 2A	-1.371	-1.099	0.394	-0.3728	-0.0468	4.0502
717	1	Extremo 2A	-1.371	7.457	0.394	-0.3728	-0.2436	2.4607
718	0	Extremo 1A	-1.773	-8.878	0.309	-0.072	0.0962	2.5881
718	0.5	Extremo 1A	-1.773	-0.322	0.309	-0.072	-0.0585	4.8882
718	1	Extremo 1A	-1.773	8.234	0.309	-0.072	-0.2131	2.9102
718	0	Extremo 2A	-1.773	-8.878	0.309	-0.072	0.0962	2.5881
718	0.5	Extremo 2A	-1.773	-0.322	0.309	-0.072	-0.0585	4.8882
718	1	Extremo 2A	-1.773	8.234	0.309	-0.072	-0.2131	2.9102
719	0	Extremo 1A	-2.102	-7.722	0.244	-0.1262	0.0566	3.018
719	0.5	Extremo 1A	-2.102	0.835	0.244	-0.1262	-0.0656	4.7397
719	1	Extremo 1A	-2.102	9.391	0.244	-0.1262	-0.1878	2.1833
719	0	Extremo 2A	-2.102	-7.722	0.244	-0.1262	0.0566	3.018
719	0.5	Extremo 2A	-2.102	0.835	0.244	-0.1262	-0.0656	4.7397
719	1	Extremo 2A	-2.102	9.391	0.244	-0.1262	-0.1878	2.1834
720	0	Extremo 1A	-2.365	-6.421	0.193	-0.3568	0.0253	2.259
720	0.5	Extremo 1A	-2.365	2.135	0.193	-0.3568	-0.0714	3.3306
720	1	Extremo 1A	-2.365	10.691	0.193	-0.3568	-0.1681	0.1241
720	0	Extremo 2A	-2.365	-6.421	0.193	-0.3568	0.0253	2.259
720	0.5	Extremo 2A	-2.365	2.135	0.193	-0.3568	-0.0714	3.3306
720	1	Extremo 2A	-2.365	10.691	0.193	-0.3568	-0.1681	0.1241
721	0	Extremo 1A	-2.573	-5.191	0.152	-0.7581	-0.00048	0.0891
721	0.5	Extremo 1A	-2.573	3.365	0.152	-0.7581	-0.0763	0.5457
721	1	Extremo 1A	-2.573	11.921	0.152	-0.7581	-0.1522	-3.276
721	0	Extremo 2A	-2.573	-5.191	0.152	-0.7581	-0.00048	0.0891
721	0.5	Extremo 2A	-2.573	3.365	0.152	-0.7581	-0.0763	0.5457
721	1	Extremo 2A	-2.573	11.921	0.152	-0.7581	-0.1522	-3.276
722	0	Extremo 1A	-2.736	-4.481	0.117	-1.2688	-0.0217	-3.715
722	0.5	Extremo 1A	-2.736	4.075	0.117	-1.2688	-0.0804	-3.6136
722	1	Extremo 1A	-2.736	12.632	0.117	-1.2688	-0.1391	-7.7903
722	0	Extremo 2A	-2.736	-4.481	0.117	-1.2688	-0.0217	-3.715
722	0.5	Extremo 2A	-2.736	4.075	0.117	-1.2688	-0.0804	-3.6136
722	1	Extremo 2A	-2.736	12.632	0.117	-1.2688	-0.1391	-7.7903
723	0	Extremo 1A	-2.861	-5.257	0.09	-1.4378	-0.0388	-9.0395
723	0.5	Extremo 1A	-2.861	3.299	0.09	-1.4378	-0.0836	-8.5499
723	1	Extremo 1A	-2.861	11.855	0.09	-1.4378	-0.1285	-12.3383
723	0	Extremo 2A	-2.861	-5.257	0.09	-1.4378	-0.0388	-9.0395
723	0.5	Extremo 2A	-2.861	3.299	0.09	-1.4378	-0.0836	-8.5499
723	1	Extremo 2A	-2.861	11.855	0.09	-1.4378	-0.1285	-12.3383
724	0	Extremo 1A	-2.957	-8.031	0.068	-0.5167	-0.0523	-14.0348
724	0.5	Extremo 1A	-2.957	0.525	0.068	-0.5167	-0.0862	-12.1584
724	1	Extremo 1A	-2.957	9.081	0.068	-0.5167	-0.12	-14.5601
724	0	Extremo 2A	-2.957	-8.031	0.068	-0.5167	-0.0523	-14.0348
724	0.5	Extremo 2A	-2.957	0.525	0.068	-0.5167	-0.0862	-12.1584
724	1	Extremo 2A	-2.957	9.081	0.068	-0.5167	-0.12	-14.5601
725	0	Extremo 1A	-3.029	-10.05	0.05	0.8919	-0.0629	-14.3749
725	0.5	Extremo 1A	-3.029	-1.494	0.05	0.8919	-0.0882	-11.4889
725	1	Extremo 1A	-3.029	7.062	0.05	0.8919	-0.1134	-12.8811
725	0	Extremo 2A	-3.029	-10.05	0.05	0.8919	-0.0629	-14.3749
725	0.5	Extremo 2A	-3.029	-1.494	0.05	0.8919	-0.0882	-11.4889
725	1	Extremo 2A	-3.029	7.062	0.05	0.8919	-0.1134	-12.8811
726	0	Extremo 1A	-3.083	-12.834	0.037	1.8009	-0.0711	-10.8216
726	0.5	Extremo 1A	-3.083	-4.277	0.037	1.8009	-0.0897	-6.5439
726	1	Extremo 1A	-3.083	4.279	0.037	1.8009	-0.1082	-6.5443
726	0	Extremo 2A	-3.083	-12.834	0.037	1.8009	-0.0711	-10.8216
726	0.5	Extremo 2A	-3.083	-4.277	0.037	1.8009	-0.0897	-6.5439
726	1	Extremo 2A	-3.083	4.279	0.037	1.8009	-0.1082	-6.5443
727	0	Extremo 1A	-3.122	-13.633	0.027	1.6081	-0.0773	-4.9552
727	0.5	Extremo 1A	-3.122	-5.077	0.027	1.6081	-0.0908	-0.2778
727	1	Extremo 1A	-3.122	3.48	0.027	1.6081	-0.1044	0.1215
727	0	Extremo 2A	-3.122	-13.633	0.027	1.6081	-0.0773	-4.9552
727	0.5	Extremo 2A	-3.122	-5.077	0.027	1.6081	-0.0908	-0.2778
727	1	Extremo 2A	-3.122	3.48	0.027	1.6081	-0.1044	0.1215
728	0	Extremo 1A	-3.151	-12.964	0.019	1.0636	-0.082	0.8601
728	0.5	Extremo 1A	-3.151	-4.408	0.019	1.0636	-0.0917	5.2029
728	1	Extremo 1A	-3.151	4.149	0.019	1.0636	-0.1014	5.2676
728	0	Extremo 2A	-3.151	-12.964	0.019	1.0636	-0.082	0.8601
728	0.5	Extremo 2A	-3.151	-4.408	0.019	1.0636	-0.0917	5.2029
728	1	Extremo 2A	-3.151	4.149	0.019	1.0636	-0.1014	5.2676
729	0	Extremo 1A	-3.171	-11.796	0.014	0.6218	-0.0855	5.5472
729	0.5	Extremo 1A	-3.171	-3.24	0.014	0.6218	-0.0924	9.3062
729	1	Extremo 1A	-3.171	5.316	0.014	0.6218	-0.0993	8.7871
729	0	Extremo 2A	-3.171	-11.796	0.014	0.6218	-0.0855	5.5472
729	0.5	Extremo 2A	-3.171	-3.24	0.014	0.6218	-0.0924	9.3062
729	1	Extremo 2A	-3.171	5.316	0.014	0.6218	-0.0993	8.7871
730	0	Extremo 1A	-3.186	-10.555	0.00965	0.3368	-0.0881	8.9025
730	0.5	Extremo 1A	-3.186	-1.999	0.00965	0.3368	-0.0929	12.041
730	1	Extremo 1A	-3.186	6.557	0.00965	0.3368	-0.0977	10.9013
730	0	Extremo 2A	-3.186	-10.555	0.00965	0.3368	-0.0881	8.9025
730	0.5	Extremo 2A	-3.186	-1.999	0.00965	0.3368	-0.0929	12.041
730	1	Extremo 2A	-3.186	6.557	0.00965	0.3368	-0.0977	10.9013
731	0	Extremo 1A	-3.196	-9.337	0.00663	0.1443	-0.09	10.9662
731	0.5	Extremo 1A	-3.196	-0.781	0.00663	0.1443	-0.0933	13.4958
731	1	Extremo 1A	-3.196	7.775	0.00663	0.1443	-0.0966	11.7473
731	0	Extremo 2A	-3.196	-9.337	0.00663	0.1443	-0.09	10.9662
731	0.5	Extremo 2A	-3.196	-0.781	0.00663	0.1443	-0.0933	13.4958
731	1	Extremo 2A	-3.196	7.775	0.00663	0.1443	-0.0966	11.7473
732	0	Extremo 1A	-3.203	-8.139	0.00446	-0.0121	-0.0913	11.7891
732	0.5	Extremo 1A	-3.203	0.417	0.00446	-0.0121	-0.0936	13.7196
732	1	Extremo 1A	-3.203	8.973	0.00446	-0.0121	-0.0958	11.3719
732	0	Extremo 2A	-3.203	-8.139	0.00446	-0.0121	-0.0913	11.7891
732	0.5	Extremo 2A	-3.203	0.417	0.00446	-0.0121	-0.0936	13.7196
732	1	Extremo 2A	-3.203	8.973	0.00446	-0.0121	-0.0958	11.3719
733	0	Extremo 1A	-3.208	-6.937	0.00292	-0.1687	-0.0923	11.3958
733	0.5	Extremo 1A	-3.208	1.619	0.00292	-0.1687	-0.0938	12.7254
733	1	Extremo 1A	-3.208	10.175	0.00292	-0.1687	-0.0952	9.777
733	0	Extremo 2A	-3.208	-6.937	0.00292	-0.1687	-0.0923	11.3957
733	0.5	Extremo 2A	-3.208	1.619	0.00292	-0.1687	-0.0938	12.7254
733	1	Extremo 2A	-3.208	10.175	0.00292	-0.1687	-0.0952	9.777
734	0	Extremo 1A	-3.211	-5.709	0.00184	-0.3644	-0.093	9.7834
734	0.5	Extremo 1A	-3.211	2.847	0.00184	-0.3644	-0.0939	10.4989
734	1	Extremo 1A	-3.211	11.404	0.00184	-0.3644	-0.0948	6.9361
734	0	Extremo 2A	-3.211	-5.709	0.00184	-0.3644	-0.093	9.7834
734	0.5	Extremo 2A	-3.211	2.847	0.00184	-0.3644	-0.0939	10.4988
734	1	Extremo 2A	-3.211	11.404	0.00184	-0.3644	-0.0948	6.9361
735	0	Extremo 1A	-3.212	-4.45	0.0011	-0.6638	-0.0935	6.8991
735	0.5	Extremo 1A	-3.212	4.106	0.0011	-0.6638	-0.094	6.9852
735	1	Extremo 1A	-3.212	12.662	0.0011	-0.6638	-0.0946	2.7931
735	0	Extremo 2A	-3.212	-4.45	0.0011	-0.6638	-0.0935	6.8991
735	0.5	Extremo 2A	-3.212	4.106	0.0011	-0.6638	-0.094	6.9852
735	1	Extremo 2A	-3.212	12.662	0.0011	-0.6638	-0.0946	2.7931
736	0	Extremo 1A	-3.214	-3.274	0.0006	-1.1418	-0.0938	2.5857
736	0.5	Extremo 1A	-3.214	5.282	0.0006	-1.1418	-0.0941	2.0837
736	1	Extremo 1A	-3.214	13.838	0.0006	-1.1418	-0.0944	-2.6964
736	0	Extremo 2A	-3.214	-3.274	0.0006	-1.1418	-0.0938	2.5857
736	0.5	Extremo 2A	-3.214	5.282	0.0006	-1.1418	-0.0941	2.0837
736	1	Extremo 2A	-3.214	13.838	0.0006	-1.1418	-0.0944	-2.6965
737	0	Extremo 1A	-3.214	-2.672	0.00026	-1.7369	-0.094	-3.4116
737	0.5	Extremo 1A	-3.214	5.884	0.00026	-1.7369	-0.0942	-4.2147
737	1	Extremo 1A	-3.214	14.441	0.00026	-1.7369	-0.0943	-9.296
737	0	Extremo 2A	-3.214	-2.672	0.00026	-1.7369	-0.094	-3.4117
737	0.5	Extremo 2A	-3.214	5.884	0.00026	-1.7369	-0.0942	-4.2148
737	1	Extremo 2A	-3.214	14.441	0.00026	-1.7369	-0.0943	-9.296
738	0	Extremo 1A	-3.214	-3.766	5.1E-05	-1.925	-0.0942	-10.9688
738	0.5	Extremo 1A	-3.214	4.79	5.1E-05	-1.925	-0.0942	-11.2248
738	1	Extremo 1A	-3.214	13.346	5.1E-05	-1.925	-0.0942	-15.7588
738	0	Extremo 2A	-3.214	-3.766	5.1E-05	-1.925	-0.0942	-10.9689
738	0.5	Extremo 2A	-3.214	4.79	5.1E-05	-1.925	-0.0942	-11.2248
738	1	Extremo 2A	-3.214	13.346	5.1E-05	-1.925	-0.0942	-15.7589
739	0	Extremo 1A	-3.214	-7.155	-7.8E-05	-0.8404	-0.0943	-17.9489
739	0.5	Extremo 1A	-3.214	1.401	-7.8E-05	-0.8404	-0.0942	-16.5102
739	1	Extremo 1A	-3.214	9.957	-7.8E-05	-0.8404	-0.0942	-19.3496
739	0	Extremo 2A	-3.214	-7.155	-7.8E-05	-0.8404	-0.0943	-17.9489
739	0.5	Extremo 2A	-3.214	1.401	-7.8E-05	-0.8404	-0.0942	-16.5102
739	1	Extremo 2A	-3.214	9.957	-7.8E-05	-0.8404	-0.0942	-19.3496
740	0	Extremo 1A	-3.214	-9.663	-0.00015	0.817	-0.0943	-19.3471
740	0.5	Extremo 1A	-3.214	-1.107	-0.00015	0.817	-0.0943	-16.6546
740	1	Extremo 1A	-3.214	7.449	-0.00015	0.817	-0.0942	-18.2402
740	0	Extremo 2A	-3.214	-9.663	-0.00015	0.817	-0.0943	-19.3471
740	0.5	Extremo 2A	-3.214	-1.107	-0.00015	0.817	-0.0943	-16.6546
740	1	Extremo 2A	-3.214	7.449	-0.00015	0.817	-0.0942	-18.2402
741	0	Extremo 1A	-3.214	-13.052	-0.00019	1.9018	-0.0944	-16.0451
741	0.5	Extremo 1A	-3.214	-4.496	-0.00019	1.9018	-0.0943	-11.658
741	1	Extremo 1A	-3.214	4.06	-0.00019	1.9018	-0.0942	-11.549
741	0	Extremo 2A	-3.214	-13.052	-0.00019	1.9018	-0.0944	-16.0451

741	0.5	Extremo 2A	-3.214	-4.496	-0.00019	1.9018	-0.0943	-11.658
741	1	Extremo 2A	-3.214	4.06	-0.00019	1.9018	-0.0942	-11.549
742	0	Extremo 1A	-3.214	-14.146	-0.0002	1.7142	-0.0944	-9.8708
742	0.5	Extremo 1A	-3.214	-5.59	-0.0002	1.7142	-0.0943	-4.9366
742	1	Extremo 1A	-3.214	2.966	-0.0002	1.7142	-0.0942	-4.2806
742	0	Extremo 2A	-3.214	-14.146	-0.0002	1.7142	-0.0944	-9.8708
742	0.5	Extremo 2A	-3.214	-5.59	-0.0002	1.7142	-0.0943	-4.9366
742	1	Extremo 2A	-3.214	2.966	-0.0002	1.7142	-0.0942	-4.2806
743	0	Extremo 1A	-3.214	-13.544	-0.00019	1.1199	-0.0944	-3.5594
743	0.5	Extremo 1A	-3.214	-4.988	-0.00019	1.1199	-0.0943	1.0735
743	1	Extremo 1A	-3.214	3.569	-0.00019	1.1199	-0.0942	1.4282
743	0	Extremo 2A	-3.214	-13.544	-0.00019	1.1199	-0.0944	-3.5594
743	0.5	Extremo 2A	-3.214	-4.988	-0.00019	1.1199	-0.0943	1.0735
743	1	Extremo 2A	-3.214	3.569	-0.00019	1.1199	-0.0942	1.4282
744	0	Extremo 1A	-3.214	-12.367	-0.00018	0.6432	-0.0944	1.6427
744	0.5	Extremo 1A	-3.214	-3.811	-0.00018	0.6432	-0.0943	5.687
744	1	Extremo 1A	-3.214	4.746	-0.00018	0.6432	-0.0942	5.4533
744	0	Extremo 2A	-3.214	-12.367	-0.00018	0.6432	-0.0944	1.6427
744	0.5	Extremo 2A	-3.214	-3.811	-0.00018	0.6432	-0.0943	5.6871
744	1	Extremo 2A	-3.214	4.746	-0.00018	0.6432	-0.0942	5.4533
745	0	Extremo 1A	-3.213	-11.107	-0.00016	0.3459	-0.0944	5.4992
745	0.5	Extremo 1A	-3.213	-2.551	-0.00016	0.3459	-0.0943	8.9137
745	1	Extremo 1A	-3.213	6.005	-0.00016	0.3459	-0.0942	8.05
745	0	Extremo 2A	-3.213	-11.107	-0.00016	0.3459	-0.0944	5.4992
745	0.5	Extremo 2A	-3.213	-2.551	-0.00016	0.3459	-0.0943	8.9137
745	1	Extremo 2A	-3.213	6.005	-0.00016	0.3459	-0.0942	8.05
746	0	Extremo 1A	-3.213	-9.876	-0.00014	0.1535	-0.0944	8.0554
746	0.5	Extremo 1A	-3.213	-1.32	-0.00014	0.1535	-0.0943	10.8545
746	1	Extremo 1A	-3.213	7.236	-0.00014	0.1535	-0.0942	9.3755
746	0	Extremo 2A	-3.213	-9.876	-0.00014	0.1535	-0.0944	8.0554
746	0.5	Extremo 2A	-3.213	-1.32	-0.00014	0.1535	-0.0943	10.8545
746	1	Extremo 2A	-3.213	7.236	-0.00014	0.1535	-0.0942	9.3756
747	0	Extremo 1A	-3.213	-8.671	-0.00013	0.0013	-0.0944	9.3684
747	0.5	Extremo 1A	-3.213	-0.115	-0.00013	0.0013	-0.0943	11.5649
747	1	Extremo 1A	-3.213	8.441	-0.00013	0.0013	-0.0942	9.4833
747	0	Extremo 2A	-3.213	-8.671	-0.00013	0.0013	-0.0944	9.3684
747	0.5	Extremo 2A	-3.213	-0.115	-0.00013	0.0013	-0.0943	11.565
747	1	Extremo 2A	-3.213	8.441	-0.00013	0.0013	-0.0942	9.4834
748	0	Extremo 1A	-3.213	-7.467	-0.00011	-0.1502	-0.0944	9.4658
748	0.5	Extremo 1A	-3.213	1.09	-0.00011	-0.1502	-0.0943	11.06
748	1	Extremo 1A	-3.213	9.646	-0.00011	-0.1502	-0.0942	8.376
748	0	Extremo 2A	-3.213	-7.467	-0.00011	-0.1502	-0.0944	9.4658
748	0.5	Extremo 2A	-3.213	1.09	-0.00011	-0.1502	-0.0943	11.06
748	1	Extremo 2A	-3.213	9.646	-0.00011	-0.1502	-0.0942	8.3761
749	0	Extremo 1A	-3.213	-6.238	-9.1E-05	-0.34	-0.0943	8.3458
749	0.5	Extremo 1A	-3.213	2.319	-9.1E-05	-0.34	-0.0943	9.3256
749	1	Extremo 1A	-3.213	10.875	-9.1E-05	-0.34	-0.0943	6.0273
749	0	Extremo 2A	-3.213	-6.238	-9.1E-05	-0.34	-0.0943	8.3458
749	0.5	Extremo 2A	-3.213	2.319	-9.1E-05	-0.34	-0.0943	9.3256
749	1	Extremo 2A	-3.213	10.875	-9.1E-05	-0.34	-0.0943	6.0273
750	0	Extremo 1A	-3.213	-4.98	-7.7E-05	-0.6301	-0.0943	5.9577
750	0.5	Extremo 1A	-3.213	3.576	-7.7E-05	-0.6301	-0.0943	6.3088
750	1	Extremo 1A	-3.213	12.132	-7.7E-05	-0.6301	-0.0943	2.3818
750	0	Extremo 2A	-3.213	-4.98	-7.7E-05	-0.6301	-0.0943	5.9578
750	0.5	Extremo 2A	-3.213	3.576	-7.7E-05	-0.6301	-0.0943	6.3089
750	1	Extremo 2A	-3.213	12.132	-7.7E-05	-0.6301	-0.0943	2.3819
751	0	Extremo 1A	-3.213	-3.802	-6.4E-05	-1.0925	-0.0943	2.1504
751	0.5	Extremo 1A	-3.213	4.754	-6.4E-05	-1.0925	-0.0943	1.9124
751	1	Extremo 1A	-3.213	13.31	-6.4E-05	-1.0925	-0.0943	-2.6038
751	0	Extremo 2A	-3.213	-3.802	-6.4E-05	-1.0925	-0.0943	2.1505
751	0.5	Extremo 2A	-3.213	4.754	-6.4E-05	-1.0925	-0.0943	1.9125
751	1	Extremo 2A	-3.213	13.31	-6.4E-05	-1.0925	-0.0943	-2.6037
752	0	Extremo 1A	-3.212	-3.177	-5.3E-05	-1.6672	-0.0943	-3.3216
752	0.5	Extremo 1A	-3.212	5.38	-5.3E-05	-1.6672	-0.0943	-3.8724
752	1	Extremo 1A	-3.212	13.936	-5.3E-05	-1.6672	-0.0943	-8.7013
752	0	Extremo 2A	-3.212	-3.177	-5.3E-05	-1.6672	-0.0943	-3.3216
752	0.5	Extremo 2A	-3.212	5.38	-5.3E-05	-1.6672	-0.0943	-3.8723
752	1	Extremo 2A	-3.212	13.936	-5.3E-05	-1.6672	-0.0943	-8.7012
753	0	Extremo 1A	-3.212	-4.187	-4.4E-05	-1.848	-0.0943	-10.3381
753	0.5	Extremo 1A	-3.212	4.369	-4.4E-05	-1.848	-0.0943	-10.3837
753	1	Extremo 1A	-3.212	12.925	-4.4E-05	-1.848	-0.0943	-14.7073
753	0	Extremo 2A	-3.212	-4.187	-4.4E-05	-1.848	-0.0943	-10.338
753	0.5	Extremo 2A	-3.212	4.369	-4.4E-05	-1.848	-0.0943	-10.3836
753	1	Extremo 2A	-3.212	12.925	-4.4E-05	-1.848	-0.0943	-14.7072
754	0	Extremo 1A	-3.212	-7.411	-3.6E-05	-0.7997	-0.0943	-16.836
754	0.5	Extremo 1A	-3.212	1.145	-3.6E-05	-0.7997	-0.0943	-15.2693
754	1	Extremo 1A	-3.212	9.701	-3.6E-05	-0.7997	-0.0943	-17.9808
754	0	Extremo 2A	-3.212	-7.411	-3.6E-05	-0.7997	-0.0943	-16.8359
754	0.5	Extremo 2A	-3.212	1.145	-3.6E-05	-0.7997	-0.0943	-15.2693
754	1	Extremo 2A	-3.212	9.701	-3.6E-05	-0.7997	-0.0943	-17.9807
755	0	Extremo 1A	-3.212	-9.784	-2.9E-05	0.8019	-0.0943	-17.9843
755	0.5	Extremo 1A	-3.212	-1.228	-2.9E-05	0.8019	-0.0943	-15.2313
755	1	Extremo 1A	-3.212	7.328	-2.9E-05	0.8019	-0.0943	-16.7564
755	0	Extremo 2A	-3.212	-9.784	-2.9E-05	0.8018	-0.0943	-17.9842
755	0.5	Extremo 2A	-3.212	-1.228	-2.9E-05	0.8018	-0.0943	-15.2312
755	1	Extremo 2A	-3.212	7.328	-2.9E-05	0.8018	-0.0943	-16.7564
756	0	Extremo 1A	-3.212	-13.008	-2.4E-05	1.8502	-0.0943	-14.6347
756	0.5	Extremo 1A	-3.212	-4.452	-2.4E-05	1.8502	-0.0943	-10.2695
756	1	Extremo 1A	-3.212	4.104	-2.4E-05	1.8502	-0.0943	-10.1825
756	0	Extremo 2A	-3.212	-13.008	-2.4E-05	1.8502	-0.0943	-14.6346
756	0.5	Extremo 2A	-3.212	-4.452	-2.4E-05	1.8502	-0.0943	-10.2695
756	1	Extremo 2A	-3.212	4.104	-2.4E-05	1.8502	-0.0943	-10.1824
757	0	Extremo 1A	-3.212	-14.019	-2E-05	1.6692	-0.0943	-8.5526
757	0.5	Extremo 1A	-3.212	-5.463	-2E-05	1.6692	-0.0943	-3.6822
757	1	Extremo 1A	-3.212	3.093	-2E-05	1.6692	-0.0943	-3.0899
757	0	Extremo 2A	-3.212	-14.019	-2E-05	1.6692	-0.0943	-8.5526
757	0.5	Extremo 2A	-3.212	-5.463	-2E-05	1.6692	-0.0943	-3.6822
757	1	Extremo 2A	-3.212	3.094	-2E-05	1.6692	-0.0943	-3.0899
758	0	Extremo 1A	-3.212	-13.394	-1.6E-05	1.0945	-0.0943	-2.3791
758	0.5	Extremo 1A	-3.212	-4.837	-1.6E-05	1.0945	-0.0943	2.1786
758	1	Extremo 1A	-3.212	3.719	-1.6E-05	1.0945	-0.0943	2.4583
758	0	Extremo 2A	-3.212	-13.394	-1.6E-05	1.0945	-0.0943	-2.3791
758	0.5	Extremo 2A	-3.212	-4.837	-1.6E-05	1.0945	-0.0943	2.1786
758	1	Extremo 2A	-3.212	3.719	-1.6E-05	1.0945	-0.0943	2.4582
759	0	Extremo 1A	-3.212	-12.215	-1.3E-05	0.6319	-0.0943	2.6824
759	0.5	Extremo 1A	-3.212	-3.659	-1.3E-05	0.6319	-0.0943	6.6511
759	1	Extremo 1A	-3.212	4.897	-1.3E-05	0.6319	-0.0943	6.3416
759	0	Extremo 2A	-3.212	-12.215	-1.3E-05	0.6319	-0.0943	2.6824
759	0.5	Extremo 2A	-3.212	-3.659	-1.3E-05	0.6319	-0.0943	6.651
759	1	Extremo 2A	-3.212	4.897	-1.3E-05	0.6319	-0.0943	6.3415
760	0	Extremo 1A	-3.212	-10.958	-1E-05	0.3415	-0.0943	6.4036
760	0.5	Extremo 1A	-3.212	-2.402	-1E-05	0.3415	-0.0943	9.7437
760	1	Extremo 1A	-3.212	6.154	-1E-05	0.3415	-0.0943	8.8057
760	0	Extremo 2A	-3.212	-10.958	-1E-05	0.3415	-0.0943	6.4036
760	0.5	Extremo 2A	-3.212	-2.402	-1E-05	0.3415	-0.0943	9.7437
760	1	Extremo 2A	-3.212	6.154	-1E-05	0.3415	-0.0943	8.8056
761	0	Extremo 1A	-3.212	-9.73	-8.3E-06	0.1515	-0.0943	8.828
761	0.5	Extremo 1A	-3.212	-1.174	-8.3E-06	0.1515	-0.0943	11.5538
761	1	Extremo 1A	-3.212	7.383	-8.3E-06	0.1515	-0.0943	10.0016
761	0	Extremo 2A	-3.212	-9.73	-8.3E-06	0.1515	-0.0943	8.8279
761	0.5	Extremo 2A	-3.212	-1.174	-8.3E-06	0.1515	-0.0943	11.5538
761	1	Extremo 2A	-3.212	7.383	-8.3E-06	0.1515	-0.0943	10.0015
762	0	Extremo 1A	-3.212	-8.526	-6.7E-06	-0.00027	-0.0943	10.0106
762	0.5	Extremo 1A	-3.212	0.03	-6.7E-06	-0.00027	-0.0943	12.1345
762	1	Extremo 1A	-3.212	8.587	-6.7E-06	-0.00027	-0.0943	9.9802
762	0	Extremo 2A	-3.212	-8.526	-6.7E-06	-0.00027	-0.0943	10.0105
762	0.5	Extremo 2A	-3.212	0.03	-6.7E-06	-0.00027	-0.0943	12.1343
762	1	Extremo 2A	-3.212	8.587	-6.7E-06	-0.00027	-0.0943	9.98
763	0	Extremo 1A	-3.212	-7.322	-5.3E-06	-0.1522	-0.0943	9.978
763	0.5	Extremo 1A	-3.212	1.235	-5.3E-06	-0.1522	-0.0943	11.4997
763	1	Extremo 1A	-3.212	9.791	-5.3E-06	-0.1522	-0.0943	8.7433
763	0	Extremo 2A	-3.212	-7.322	-5.3E-06	-0.1522	-0.0943	9.9778
763	0.5	Extremo 2A	-3.212	1.235	-5.3E-06	-0.1522	-0.0943	11.4995
763	1	Extremo 2A	-3.212	9.791	-5.3E-06	-0.1522	-0.0943	8.7431
764	0	Extremo 1A	-3.212	-6.093	-4.3E-06	-0.3431	-0.0943	8.7278
764	0.5	Extremo 1A	-3.212	2.464	-4.3E-06	-0.3431	-0.0943	9.6351
764	1	Extremo 1A	-3.212	11.02	-4.3E-06	-0.3431	-0.0943	6.2643
764	0	Extremo 2A	-3.212	-6.093	-4.3E-06	-0.3431	-0.0943	8.7276
764	0.5	Extremo 2A	-3.212	2.464	-4.3E-06	-0.3431	-0.0943	9.6349
764	1	Extremo 2A	-3.212	11.02	-4.3E-06	-0.3431	-0.0943	6.2641
765	0	Extremo 1A	-3.212	-4.835	-3.4E-06	-0.6356	-0.0943	6.2085
765	0.5	Extremo 1A	-3.212	3.721	-3.4E-06	-0.6356	-0.0943	6.487
765	1	Extremo 1A	-3.212	12.277	-3.4E-06	-0.6356	-0.0943	2.4873
765	0	Extremo 2A	-3.212	-4.835	-3.4E-06	-0.6356	-0.0943	6.2084

765	0.5	Extremo 2A	-3.212	3.721	-3.4E-06	-0.6356	-0.0943	6.4868
765	1	Extremo 2A	-3.212	12.277	-3.4E-06	-0.6356	-0.0943	2.4871
766	0	Extremo 1A	-3.212	-3.657	-2.7E-06	-1.1022	-0.0943	2.2674
766	0.5	Extremo 1A	-3.212	4.899	-2.7E-06	-1.1022	-0.0943	1.9571
766	1	Extremo 1A	-3.212	13.455	-2.7E-06	-1.1022	-0.0943	-2.6314
766	0	Extremo 2A	-3.212	-3.657	-2.7E-06	-1.1022	-0.0943	2.2672
766	0.5	Extremo 2A	-3.212	4.899	-2.7E-06	-1.1022	-0.0943	1.9569
766	1	Extremo 2A	-3.212	13.455	-2.7E-06	-1.1022	-0.0943	-2.6317
767	0	Extremo 1A	-3.212	-3.038	-2.2E-06	-1.6826	-0.0943	-3.3437
767	0.5	Extremo 1A	-3.212	5.518	-2.2E-06	-1.6826	-0.0943	-3.9636
767	1	Extremo 1A	-3.212	14.074	-2.2E-06	-1.6826	-0.0943	-8.8615
767	0	Extremo 2A	-3.212	-3.038	-2.2E-06	-1.6826	-0.0943	-3.344
767	0.5	Extremo 2A	-3.212	5.518	-2.2E-06	-1.6826	-0.0943	-3.9638
767	1	Extremo 2A	-3.212	14.074	-2.2E-06	-1.6826	-0.0943	-8.8618
768	0	Extremo 1A	-3.212	-4.072	-1.7E-06	-1.8657	-0.0943	-10.5037
768	0.5	Extremo 1A	-3.212	4.485	-1.7E-06	-1.8657	-0.0943	-10.6069
768	1	Extremo 1A	-3.212	13.041	-1.7E-06	-1.8657	-0.0943	-14.9882
768	0	Extremo 2A	-3.212	-4.072	-1.7E-06	-1.8657	-0.0943	-10.5039
768	0.5	Extremo 2A	-3.212	4.485	-1.7E-06	-1.8657	-0.0943	-10.6072
768	1	Extremo 2A	-3.212	13.041	-1.7E-06	-1.8657	-0.0943	-14.9885
769	0	Extremo 1A	-3.212	-7.341	-1.4E-06	-0.8082	-0.0943	-17.1296
769	0.5	Extremo 1A	-3.212	1.216	-1.4E-06	-0.8082	-0.0943	-15.5984
769	1	Extremo 1A	-3.212	9.772	-1.4E-06	-0.8082	-0.0943	-18.3453
769	0	Extremo 2A	-3.212	-7.341	-1.4E-06	-0.8082	-0.0943	-17.1299
769	0.5	Extremo 2A	-3.212	1.216	-1.4E-06	-0.8082	-0.0943	-15.5987
769	1	Extremo 2A	-3.212	9.772	-1.4E-06	-0.8082	-0.0943	-18.3456
770	0	Extremo 1A	-3.212	-9.75	-1.1E-06	0.8078	-0.0943	-18.3443
770	0.5	Extremo 1A	-3.212	-1.194	-1.1E-06	0.8078	-0.0943	-15.6085
770	1	Extremo 1A	-3.212	7.363	-1.1E-06	0.8078	-0.0943	-17.1508
770	0	Extremo 2A	-3.212	-9.75	-1.1E-06	0.8078	-0.0943	-18.3446
770	0.5	Extremo 2A	-3.212	-1.194	-1.1E-06	0.8078	-0.0943	-15.6087
770	1	Extremo 2A	-3.212	7.363	-1.1E-06	0.8078	-0.0943	-17.151
771	0	Extremo 1A	-3.212	-13.019	-8.7E-07	1.8653	-0.0943	-15.0074
771	0.5	Extremo 1A	-3.212	-4.462	-8.7E-07	1.8653	-0.0943	-10.6371
771	1	Extremo 1A	-3.212	4.094	-8.7E-07	1.8653	-0.0943	-10.545
771	0	Extremo 2A	-3.212	-13.019	-8.7E-07	1.8653	-0.0943	-15.0076
771	0.5	Extremo 2A	-3.212	-4.462	-8.7E-07	1.8653	-0.0943	-10.6373
771	1	Extremo 2A	-3.212	4.094	-8.7E-07	1.8653	-0.0943	-10.5451
772	0	Extremo 1A	-3.212	-14.052	-6.9E-07	1.6822	-0.0943	-8.9008
772	0.5	Extremo 1A	-3.212	-5.496	-6.9E-07	1.6822	-0.0943	-4.0139
772	1	Extremo 1A	-3.212	3.061	-6.9E-07	1.6822	-0.0943	-3.4052
772	0	Extremo 2A	-3.212	-14.052	-6.9E-07	1.6822	-0.0943	-8.9009
772	0.5	Extremo 2A	-3.212	-5.496	-6.9E-07	1.6822	-0.0943	-4.014
772	1	Extremo 2A	-3.212	3.061	-6.9E-07	1.6822	-0.0943	-3.4052
773	0	Extremo 1A	-3.212	-13.433	-5.5E-07	1.1018	-0.0943	-2.6908
773	0.5	Extremo 1A	-3.212	-4.877	-5.5E-07	1.1018	-0.0943	1.8866
773	1	Extremo 1A	-3.212	3.68	-5.5E-07	1.1018	-0.0943	2.1858
773	0	Extremo 2A	-3.212	-13.433	-5.5E-07	1.1018	-0.0943	-2.6908
773	0.5	Extremo 2A	-3.212	-4.877	-5.5E-07	1.1018	-0.0943	1.8866
773	1	Extremo 2A	-3.212	3.68	-5.5E-07	1.1018	-0.0943	2.1859
774	0	Extremo 1A	-3.212	-12.255	-4.4E-07	0.6352	-0.0943	2.4078
774	0.5	Extremo 1A	-3.212	-3.699	-4.4E-07	0.6352	-0.0943	6.3964
774	1	Extremo 1A	-3.212	4.857	-4.4E-07	0.6352	-0.0943	6.1068
774	0	Extremo 2A	-3.212	-12.255	-4.4E-07	0.6352	-0.0943	2.4079
774	0.5	Extremo 2A	-3.212	-3.699	-4.4E-07	0.6352	-0.0943	6.3965
774	1	Extremo 2A	-3.212	4.857	-4.4E-07	0.6352	-0.0943	6.107
775	0	Extremo 1A	-3.212	-10.997	-3.5E-07	0.3428	-0.0943	6.1647
775	0.5	Extremo 1A	-3.212	-2.441	-3.5E-07	0.3428	-0.0943	9.5244
775	1	Extremo 1A	-3.212	6.115	-3.5E-07	0.3428	-0.0943	8.6059
775	0	Extremo 2A	-3.212	-10.998	-3.5E-07	0.3428	-0.0943	6.1649
775	0.5	Extremo 2A	-3.212	-2.441	-3.5E-07	0.3428	-0.0943	9.5246
775	1	Extremo 2A	-3.212	6.115	-3.5E-07	0.3428	-0.0943	8.6062
776	0	Extremo 1A	-3.212	-9.768	-2.7E-07	0.152	-0.0943	8.6237
776	0.5	Extremo 1A	-3.212	-1.212	-2.7E-07	0.152	-0.0943	11.3689
776	1	Extremo 1A	-3.212	7.344	-2.7E-07	0.152	-0.0943	9.8359
776	0	Extremo 2A	-3.212	-9.769	-2.7E-07	0.152	-0.0943	8.624
776	0.5	Extremo 2A	-3.212	-1.212	-2.7E-07	0.152	-0.0943	11.3692
776	1	Extremo 2A	-3.212	7.344	-2.7E-07	0.152	-0.0943	9.8363
777	0	Extremo 1A	-3.212	-8.564	-2.2E-07	6.7E-05	-0.0943	9.8406
777	0.5	Extremo 1A	-3.212	-0.00786	-2.2E-07	6.7E-05	-0.0943	11.9836
777	1	Extremo 1A	-3.212	8.548	-2.2E-07	6.7E-05	-0.0943	9.8484
777	0	Extremo 2A	-3.212	-8.564	-2.2E-07	6.8E-05	-0.0943	9.841
777	0.5	Extremo 2A	-3.212	-0.00798	-2.2E-07	6.8E-05	-0.0943	11.984
777	1	Extremo 2A	-3.212	8.548	-2.2E-07	6.8E-05	-0.0943	9.849
778	0	Extremo 1A	-3.212	-7.36	-1.7E-07	-0.1518	-0.0943	9.842
778	0.5	Extremo 1A	-3.212	1.196	-1.7E-07	-0.1518	-0.0943	11.3828
778	1	Extremo 1A	-3.212	9.753	-1.7E-07	-0.1518	-0.0943	8.6456
778	0	Extremo 2A	-3.212	-7.36	-1.7E-07	-0.1518	-0.0943	9.8425
778	0.5	Extremo 2A	-3.212	1.196	-1.7E-07	-0.1518	-0.0943	11.3834
778	1	Extremo 2A	-3.212	9.753	-1.7E-07	-0.1518	-0.0943	8.6462
779	0	Extremo 1A	-3.212	-6.131	-1.4E-07	-0.3424	-0.0943	8.626
779	0.5	Extremo 1A	-3.212	2.425	-1.4E-07	-0.3424	-0.0943	9.5524
779	1	Extremo 1A	-3.212	10.982	-1.4E-07	-0.3424	-0.0943	6.2007
779	0	Extremo 2A	-3.212	-6.131	-1.4E-07	-0.3424	-0.0943	8.6266
779	0.5	Extremo 2A	-3.212	2.425	-1.4E-07	-0.3424	-0.0943	9.5531
779	1	Extremo 2A	-3.212	10.981	-1.4E-07	-0.3424	-0.0943	6.2014
780	0	Extremo 1A	-3.212	-4.873	-1.1E-07	-0.6343	-0.0943	6.1411
780	0.5	Extremo 1A	-3.212	3.683	-1.1E-07	-0.6343	-0.0943	6.4387
780	1	Extremo 1A	-3.212	12.239	-1.1E-07	-0.6343	-0.0943	2.4582
780	0	Extremo 2A	-3.212	-4.873	-1.1E-07	-0.6343	-0.0943	6.1418
780	0.5	Extremo 2A	-3.212	3.683	-1.1E-07	-0.6343	-0.0943	6.4395
780	1	Extremo 2A	-3.212	12.239	-1.1E-07	-0.6343	-0.0943	2.459
781	0	Extremo 1A	-3.212	-3.696	-8.5E-08	-1.0998	-0.0943	2.2351
781	0.5	Extremo 1A	-3.212	4.861	-8.5E-08	-1.0998	-0.0943	1.9438
781	1	Extremo 1A	-3.212	13.417	-8.5E-08	-1.0998	-0.0943	-2.6256
781	0	Extremo 2A	-3.212	-3.696	-8.5E-08	-1.0998	-0.0943	2.2359
781	0.5	Extremo 2A	-3.212	4.861	-8.5E-08	-1.0998	-0.0943	1.9447
781	1	Extremo 2A	-3.212	13.417	-8.5E-08	-1.0998	-0.0943	-2.6247
782	0	Extremo 1A	-3.212	-3.075	-6.7E-08	-1.6787	-0.0943	-3.3396
782	0.5	Extremo 1A	-3.212	5.481	-6.7E-08	-1.6787	-0.0943	-3.9413
782	1	Extremo 1A	-3.212	14.038	-6.7E-08	-1.6787	-0.0943	-8.821
782	0	Extremo 2A	-3.212	-3.075	-6.7E-08	-1.6787	-0.0943	-3.3387
782	0.5	Extremo 2A	-3.212	5.481	-6.7E-08	-1.6787	-0.0943	-3.9403
782	1	Extremo 2A	-3.212	14.038	-6.7E-08	-1.6787	-0.0943	-8.82
783	0	Extremo 1A	-3.212	-4.102	-5.3E-08	-1.8613	-0.0943	-10.462
783	0.5	Extremo 1A	-3.212	4.454	-5.3E-08	-1.8613	-0.0943	-10.55
783	1	Extremo 1A	-3.212	13.01	-5.3E-08	-1.8613	-0.0943	-14.9161
783	0	Extremo 2A	-3.212	-4.102	-5.3E-08	-1.8612	-0.0943	-10.4609
783	0.5	Extremo 2A	-3.212	4.454	-5.3E-08	-1.8612	-0.0943	-10.5488
783	1	Extremo 2A	-3.212	13.01	-5.3E-08	-1.8612	-0.0943	-14.9149
784	0	Extremo 1A	-3.212	-7.36	-4.2E-08	-0.8061	-0.0943	-17.0544
784	0.5	Extremo 1A	-3.212	1.197	-4.2E-08	-0.8061	-0.0943	-15.5137
784	1	Extremo 1A	-3.212	9.753	-4.2E-08	-0.8061	-0.0943	-18.2511
784	0	Extremo 2A	-3.212	-7.359	-4.2E-08	-0.806	-0.0943	-17.0531
784	0.5	Extremo 2A	-3.212	1.197	-4.2E-08	-0.806	-0.0943	-15.5125
784	1	Extremo 2A	-3.212	9.753	-4.2E-08	-0.806	-0.0943	-18.25
785	0	Extremo 1A	-3.212	-9.759	-3.3E-08	0.8062	-0.0943	-18.2514
785	0.5	Extremo 1A	-3.212	-1.203	-3.3E-08	0.8062	-0.0943	-15.5108
785	1	Extremo 1A	-3.212	7.353	-3.3E-08	0.8062	-0.0943	-17.0483
785	0	Extremo 2A	-3.212	-9.759	-3.3E-08	0.8061	-0.0943	-18.2502
785	0.5	Extremo 2A	-3.212	-1.203	-3.3E-08	0.8061	-0.0943	-15.5098
785	1	Extremo 2A	-3.212	7.353	-3.3E-08	0.8061	-0.0943	-17.0474
786	0	Extremo 1A	-3.212	-13.017	-2.6E-08	1.8614	-0.0943	-14.9106
786	0.5	Extremo 1A	-3.212	-4.46	-2.6E-08	1.8614	-0.0943	-10.5414
786	1	Extremo 1A	-3.212	4.096	-2.6E-08	1.8614	-0.0943	-10.4503
786	0	Extremo 2A	-3.212	-13.016	-2.6E-08	1.8613	-0.0943	-14.9098
786	0.5	Extremo 2A	-3.212	-4.46	-2.6E-08	1.8613	-0.0943	-10.5407
786	1	Extremo 2A	-3.212	4.096	-2.6E-08	1.8613	-0.0943	-10.4498
787	0	Extremo 1A	-3.212	-14.044	-2E-08	1.6788	-0.0943	-8.8099
787	0.5	Extremo 1A	-3.212	-5.488	-2E-08	1.6788	-0.0943	-3.927
787	1	Extremo 1A	-3.212	3.069	-2E-08	1.6788	-0.0943	-3.3222
787	0	Extremo 2A	-3.212	-14.044	-2E-08	1.6788	-0.0943	-8.8094
787	0.5	Extremo 2A	-3.212	-5.487	-2E-08	1.6788	-0.0943	-3.9267
787	1	Extremo 2A	-3.212	3.069	-2E-08	1.6788	-0.0943	-3.3221
788	0	Extremo 1A	-3.212	-13.423	-1.6E-08	1.0999	-0.0943	-2.6088
788	0.5	Extremo 1A	-3.212	-4.867	-1.6E-08	1.0999	-0.0943	1.9638
788	1	Extremo 1A	-3.212	3.689	-1.6E-08	1.0999	-0.0943	2.2582
788	0	Extremo 2A	-3.212	-13.423	-1.6E-08	1.0999	-0.0943	-2.6087
788	0.5	Extremo 2A	-3.212	-4.867	-1.6E-08	1.0999	-0.0943	1.9636
788	1	Extremo 2A	-3.212	3.69	-1.6E-08	1.0999	-0.0943	2.2579
789	0	Extremo 1A	-3.212	-12.245	-1.3E-08	0.6344	-0.0943	2.4807
789	0.5	Extremo 1A	-3.212	-3.689	-1.3E-08	0.6344	-0.0943	6.4644
789	1	Extremo 1A	-3.212	4.867	-1.3E-08	0.6344	-0.0943	6.17
789	0	Extremo 2A	-3.212	-12.245	-1.2E-08	0.6344	-0.0943	2.4804

789	0.5	Extremo 2A	-3.212	-3.689	-1.2E-08	0.6344	-0.0943	6.4639
789	1	Extremo 2A	-3.212	4.867	-1.2E-08	0.6344	-0.0943	6.1692
790	0	Extremo 1A	-3.212	-10.988	-9.9E-09	0.3425	-0.0943	6.2289
790	0.5	Extremo 1A	-3.212	-2.432	-9.9E-09	0.3425	-0.0943	9.5838
790	1	Extremo 1A	-3.212	6.125	-9.9E-09	0.3425	-0.0943	8.6606
790	0	Extremo 2A	-3.212	-10.987	-9.4E-09	0.3425	-0.0943	6.2282
790	0.5	Extremo 2A	-3.212	-2.431	-9.4E-09	0.3425	-0.0943	9.5829
790	1	Extremo 2A	-3.212	6.125	-9.4E-09	0.3425	-0.0943	8.6594
791	0	Extremo 1A	-3.212	-9.759	-7.7E-09	0.1519	-0.0943	8.6795
791	0.5	Extremo 1A	-3.212	-1.203	-7.7E-09	0.1519	-0.0943	11.4199
791	1	Extremo 1A	-3.212	7.353	-7.7E-09	0.1519	-0.0943	9.8823
791	0	Extremo 2A	-3.212	-9.759	-7.1E-09	0.1519	-0.0943	8.6784
791	0.5	Extremo 2A	-3.212	-1.202	-7.1E-09	0.1519	-0.0943	11.4186
791	1	Extremo 2A	-3.212	7.354	-7.1E-09	0.1519	-0.0943	9.8807
792	0	Extremo 1A	-3.212	-8.555	-6E-09	-1.2E-05	-0.0943	9.888
792	0.5	Extremo 1A	-3.212	0.00145	-6E-09	-1.2E-05	-0.0943	12.0264
792	1	Extremo 1A	-3.212	8.558	-6E-09	-1.2E-05	-0.0943	9.8866
792	0	Extremo 2A	-3.212	-8.554	-5.3E-09	-1.6E-05	-0.0943	9.8865
792	0.5	Extremo 2A	-3.212	0.0019	-5.3E-09	-1.6E-05	-0.0943	12.0246
792	1	Extremo 2A	-3.212	8.558	-5.3E-09	-1.6E-05	-0.0943	9.8846
793	0	Extremo 1A	-3.212	-7.351	-4.7E-09	-0.1519	-0.0943	9.8812
793	0.5	Extremo 1A	-3.212	1.206	-4.7E-09	-0.1519	-0.0943	11.4174
793	1	Extremo 1A	-3.212	9.762	-4.7E-09	-0.1519	-0.0943	8.6754
793	0	Extremo 2A	-3.212	-7.35	-3.7E-09	-0.1519	-0.0943	9.8793
793	0.5	Extremo 2A	-3.212	1.206	-3.7E-09	-0.1519	-0.0943	11.4152
793	1	Extremo 2A	-3.212	9.762	-3.7E-09	-0.1519	-0.0943	8.6731
794	0	Extremo 1A	-3.212	-6.122	-3.6E-09	-0.3426	-0.0943	8.6569
794	0.5	Extremo 1A	-3.212	2.435	-3.6E-09	-0.3426	-0.0943	9.5786
794	1	Extremo 1A	-3.212	10.991	-3.6E-09	-0.3426	-0.0943	6.2223
794	0	Extremo 2A	-3.212	-6.121	-2.4E-09	-0.3426	-0.0943	8.6545
794	0.5	Extremo 2A	-3.212	2.435	-2.4E-09	-0.3426	-0.0943	9.5761
794	1	Extremo 2A	-3.212	10.991	-2.4E-09	-0.3426	-0.0943	6.2195
795	0	Extremo 1A	-3.212	-4.864	-2.7E-09	-0.6345	-0.0943	6.1636
795	0.5	Extremo 1A	-3.212	3.692	-2.7E-09	-0.6345	-0.0943	6.4566
795	1	Extremo 1A	-3.212	12.248	-2.7E-09	-0.6345	-0.0943	2.4715
795	0	Extremo 2A	-3.212	-4.864	-1.2E-09	-0.6346	-0.0943	6.1609
795	0.5	Extremo 2A	-3.212	3.693	-1.2E-09	-0.6346	-0.0943	6.4537
795	1	Extremo 2A	-3.212	12.249	-1.2E-09	-0.6346	-0.0943	2.4683
796	0	Extremo 1A	-3.212	-3.686	-2E-09	-1.1003	-0.0943	2.2492
796	0.5	Extremo 1A	-3.212	4.87	-2E-09	-1.1003	-0.0943	1.9532
796	1	Extremo 1A	-3.212	13.426	-2E-09	-1.1003	-0.0943	-2.6208
796	0	Extremo 2A	-3.212	-3.686	-7.8E-11	-1.1004	-0.0943	2.246
796	0.5	Extremo 2A	-3.212	4.87	-7.8E-11	-1.1004	-0.0943	1.9498
796	1	Extremo 2A	-3.212	13.427	-7.8E-11	-1.1004	-0.0943	-2.6244
797	0	Extremo 1A	-3.212	-3.066	-1.4E-09	-1.6794	-0.0943	-3.3343
797	0.5	Extremo 1A	-3.212	5.49	-1.4E-09	-1.6794	-0.0943	-3.9404
797	1	Extremo 1A	-3.212	14.047	-1.4E-09	-1.6794	-0.0943	-8.8246
797	0	Extremo 2A	-3.212	-3.066	1E-09	-1.6796	-0.0943	-3.338
797	0.5	Extremo 2A	-3.212	5.491	1E-09	-1.6796	-0.0943	-3.9442
797	1	Extremo 2A	-3.212	14.047	1E-09	-1.6796	-0.0943	-8.8287
798	0	Extremo 1A	-3.212	-4.094	-9.5E-10	-1.8621	-0.0943	-10.4656
798	0.5	Extremo 1A	-3.212	4.462	-9.5E-10	-1.8621	-0.0943	-10.5575
798	1	Extremo 1A	-3.212	13.018	-9.5E-10	-1.8621	-0.0943	-14.9275
798	0	Extremo 2A	-3.212	-4.094	2.2E-09	-1.8623	-0.0943	-10.4698
798	0.5	Extremo 2A	-3.212	4.462	2.2E-09	-1.8623	-0.0943	-10.5617
798	1	Extremo 2A	-3.212	13.018	2.2E-09	-1.8623	-0.0943	-14.9318
799	0	Extremo 1A	-3.212	-7.354	-5.1E-10	-0.8065	-0.0943	-17.0661
799	0.5	Extremo 1A	-3.212	1.202	-5.1E-10	-0.8065	-0.0943	-15.5283
799	1	Extremo 1A	-3.212	9.759	-5.1E-10	-0.8065	-0.0943	-18.2686
799	0	Extremo 2A	-3.212	-7.354	3.5E-09	-0.8065	-0.0943	-17.0707
799	0.5	Extremo 2A	-3.212	1.202	3.5E-09	-0.8065	-0.0943	-15.5327
799	1	Extremo 2A	-3.212	9.758	3.5E-09	-0.8065	-0.0943	-18.2728
800	0	Extremo 1A	-3.212	-9.755	-1.2E-10	0.8064	-0.0943	-18.2684
800	0.5	Extremo 1A	-3.212	-1.199	-1.2E-10	0.8064	-0.0943	-15.5298
800	1	Extremo 1A	-3.212	7.357	-1.2E-10	0.8064	-0.0943	-17.0693
800	0	Extremo 2A	-3.212	-9.756	4.9E-09	0.8065	-0.0943	-18.2727
800	0.5	Extremo 2A	-3.212	-1.2	4.9E-09	0.8065	-0.0943	-15.5336
800	1	Extremo 2A	-3.212	7.356	4.9E-09	0.8065	-0.0943	-17.0728
801	0	Extremo 1A	-3.212	-13.015	2.7E-10	1.8621	-0.0943	-14.9304
801	0.5	Extremo 1A	-3.212	-4.459	2.7E-10	1.8621	-0.0943	-10.562
801	1	Extremo 1A	-3.212	4.098	2.7E-10	1.8621	-0.0943	-10.4718
801	0	Extremo 2A	-3.212	-13.016	6.6E-09	1.8623	-0.0943	-14.9337
801	0.5	Extremo 2A	-3.212	-4.46	6.6E-09	1.8623	-0.0943	-10.5647
801	1	Extremo 2A	-3.212	4.096	6.6E-09	1.8623	-0.0943	-10.4738
802	0	Extremo 1A	-3.212	-14.043	6.6E-10	1.6794	-0.0943	-8.8306
802	0.5	Extremo 1A	-3.212	-5.487	6.6E-10	1.6794	-0.0943	-3.948
802	1	Extremo 1A	-3.212	3.069	6.6E-10	1.6794	-0.0943	-3.3436
802	0	Extremo 2A	-3.212	-14.045	8.7E-09	1.6796	-0.0943	-8.8324
802	0.5	Extremo 2A	-3.212	-5.489	8.7E-09	1.6796	-0.0943	-3.9491
802	1	Extremo 2A	-3.212	3.068	8.7E-09	1.6796	-0.0943	-3.3439
803	0	Extremo 1A	-3.212	-13.423	1.1E-09	1.1002	-0.0943	-2.6298
803	0.5	Extremo 1A	-3.212	-4.867	1.1E-09	1.1002	-0.0943	1.9425
803	1	Extremo 1A	-3.212	3.69	1.1E-09	1.1002	-0.0943	2.2368
803	0	Extremo 2A	-3.212	-13.425	1.1E-08	1.1003	-0.0943	-2.6301
803	0.5	Extremo 2A	-3.212	-4.868	1.1E-08	1.1003	-0.0943	1.9431
803	1	Extremo 2A	-3.212	3.688	1.1E-08	1.1003	-0.0943	2.2381
804	0	Extremo 1A	-3.212	-12.245	1.6E-09	0.6345	-0.0943	2.4594
804	0.5	Extremo 1A	-3.212	-3.689	1.6E-09	0.6345	-0.0943	6.4429
804	1	Extremo 1A	-3.212	4.867	1.6E-09	0.6345	-0.0943	6.1482
804	0	Extremo 2A	-3.212	-12.247	1.5E-08	0.6346	-0.0943	2.4606
804	0.5	Extremo 2A	-3.212	-3.691	1.5E-08	0.6346	-0.0943	6.4449
804	1	Extremo 2A	-3.212	4.866	1.5E-08	0.6346	-0.0943	6.1511
805	0	Extremo 1A	-3.212	-10.987	2.1E-09	0.3425	-0.0943	6.2072
805	0.5	Extremo 1A	-3.212	-2.431	2.1E-09	0.3425	-0.0943	9.5618
805	1	Extremo 1A	-3.212	6.125	2.1E-09	0.3425	-0.0943	8.6384
805	0	Extremo 2A	-3.212	-10.989	1.9E-08	0.3426	-0.0943	6.2099
805	0.5	Extremo 2A	-3.212	-2.433	1.9E-08	0.3426	-0.0943	9.5654
805	1	Extremo 2A	-3.212	6.123	1.9E-08	0.3426	-0.0943	8.6428
806	0	Extremo 1A	-3.212	-9.759	2.8E-09	0.1519	-0.0943	8.6573
806	0.5	Extremo 1A	-3.212	-1.202	2.8E-09	0.1519	-0.0943	11.3975
806	1	Extremo 1A	-3.212	7.354	2.8E-09	0.1519	-0.0943	9.8596
806	0	Extremo 2A	-3.212	-9.76	2.4E-08	0.1519	-0.0943	8.6616
806	0.5	Extremo 2A	-3.212	-1.204	2.4E-08	0.1519	-0.0943	11.4027
806	1	Extremo 2A	-3.212	7.352	2.4E-08	0.1519	-0.0943	9.8656
807	0	Extremo 1A	-3.212	-8.554	3.6E-09	-1.7E-05	-0.0943	9.8654
807	0.5	Extremo 1A	-3.212	0.00198	3.6E-09	-1.7E-05	-0.0943	12.0035
807	1	Extremo 1A	-3.212	8.558	3.6E-09	-1.7E-05	-0.0943	9.8634
807	0	Extremo 2A	-3.212	-8.556	3E-08	-1.9E-06	-0.0943	9.8712
807	0.5	Extremo 2A	-3.212	0.00028	3E-08	-1.9E-06	-0.0943	12.0101
807	1	Extremo 2A	-3.212	8.557	3E-08	-1.9E-06	-0.0943	9.8709
808	0	Extremo 1A	-3.212	-7.35	4.6E-09	-0.1519	-0.0943	9.8581
808	0.5	Extremo 1A	-3.212	1.206	4.6E-09	-0.1519	-0.0943	11.394
808	1	Extremo 1A	-3.212	9.763	4.6E-09	-0.1519	-0.0943	8.6518
808	0	Extremo 2A	-3.212	-7.352	3.8E-08	-0.1519	-0.0943	9.8654
808	0.5	Extremo 2A	-3.212	1.205	3.8E-08	-0.1519	-0.0943	11.4022
808	1	Extremo 2A	-3.212	9.761	3.8E-08	-0.1519	-0.0943	8.6608
809	0	Extremo 1A	-3.212	-6.121	5.9E-09	-0.3426	-0.0943	8.6333
809	0.5	Extremo 1A	-3.212	2.435	5.9E-09	-0.3426	-0.0943	9.5548
809	1	Extremo 1A	-3.212	10.991	5.9E-09	-0.3426	-0.0943	6.1981
809	0	Extremo 2A	-3.212	-6.123	4.8E-08	-0.3426	-0.0943	8.6421
809	0.5	Extremo 2A	-3.212	2.433	4.8E-08	-0.3426	-0.0943	9.5645
809	1	Extremo 2A	-3.212	10.99	4.8E-08	-0.3426	-0.0943	6.2087
810	0	Extremo 1A	-3.212	-4.863	7.5E-09	-0.6347	-0.0943	6.1396
810	0.5	Extremo 1A	-3.212	3.693	7.5E-09	-0.6347	-0.0943	6.4322
810	1	Extremo 1A	-3.212	12.249	7.5E-09	-0.6347	-0.0943	2.4467
810	0	Extremo 2A	-3.212	-4.865	6E-08	-0.6346	-0.0943	6.1499
810	0.5	Extremo 2A	-3.212	3.691	6E-08	-0.6346	-0.0943	6.4435
810	1	Extremo 2A	-3.212	12.247	6E-08	-0.6346	-0.0943	2.4589
811	0	Extremo 1A	-3.212	-3.686	9.5E-09	-1.1007	-0.0943	2.2244
811	0.5	Extremo 1A	-3.212	4.871	9.5E-09	-1.1007	-0.0943	1.9282
811	1	Extremo 1A	-3.212	13.427	9.5E-09	-1.1007	-0.0943	-2.6462
811	0	Extremo 2A	-3.212	-3.687	7.6E-08	-1.1004	-0.0943	2.2364
811	0.5	Extremo 2A	-3.212	4.869	7.6E-08	-1.1004	-0.0943	1.941
811	1	Extremo 2A	-3.212	13.425	7.6E-08	-1.1004	-0.0943	-2.6324
812	0	Extremo 1A	-3.212	-3.066	1.2E-08	-1.6803	-0.0943	-3.3601
812	0.5	Extremo 1A	-3.212	5.491	1.2E-08	-1.6803	-0.0943	-3.9663
812	1	Extremo 1A	-3.212	14.047	1.2E-08	-1.6803	-0.0943	-8.8506
812	0	Extremo 2A	-3.212	-3.067	9.6E-08	-1.6797	-0.0943	-3.3462
812	0.5	Extremo 2A	-3.212	5.489	9.6E-08	-1.6797	-0.0943	-3.9516
812	1	Extremo 2A	-3.212	14.045	9.6E-08	-1.6797	-0.0943	-8.8352
813	0	Extremo 1A	-3.212	-4.096	1.5E-08	-1.8631	-0.0943	-10.4927
813	0.5	Extremo 1A	-3.212	4.461	1.5E-08	-1.8631	-0.0943	-10.584
813	1	Extremo 1A	-3.212	13.017	1.5E-08	-1.8631	-0.0943	-14.9533
813	0	Extremo 2A	-3.212	-4.096	1.2E-07	-1.8624	-0.0943	-10.4767

813	0.5	Extremo 2A	-3.212	4.46	1.2E-07	-1.8624	-0.0943	-10.5677
813	1	Extremo 2A	-3.212	13.016	1.2E-07	-1.8624	-0.0943	-14.9369
814	0	Extremo 1A	-3.212	-7.358	1.9E-08	-0.8068	-0.0943	-17.0936
814	0.5	Extremo 1A	-3.212	1.198	1.9E-08	-0.8068	-0.0943	-15.5537
814	1	Extremo 1A	-3.212	9.755	1.9E-08	-0.8068	-0.0943	-18.2919
814	0	Extremo 2A	-3.212	-7.356	1.5E-07	-0.8066	-0.0943	-17.0762
814	0.5	Extremo 2A	-3.212	1.2	1.5E-07	-0.8066	-0.0943	-15.537
814	1	Extremo 2A	-3.212	9.756	1.5E-07	-0.8066	-0.0943	-18.2759
815	0	Extremo 1A	-3.212	-9.762	2.5E-08	0.807	-0.0943	-18.2922
815	0.5	Extremo 1A	-3.212	-1.206	2.5E-08	0.807	-0.0943	-15.5503
815	1	Extremo 1A	-3.212	7.351	2.5E-08	0.807	-0.0943	-17.0866
815	0	Extremo 2A	-3.212	-9.759	1.9E-07	0.8066	-0.0943	-18.2761
815	0.5	Extremo 2A	-3.212	-1.202	1.9E-07	0.8066	-0.0943	-15.5358
815	1	Extremo 2A	-3.212	7.354	1.9E-07	0.8066	-0.0943	-17.0736
816	0	Extremo 1A	-3.212	-13.024	3.1E-08	1.8632	-0.0943	-14.947
816	0.5	Extremo 1A	-3.212	-4.468	3.1E-08	1.8632	-0.0943	-10.5739
816	1	Extremo 1A	-3.212	4.088	3.1E-08	1.8632	-0.0943	-10.479
816	0	Extremo 2A	-3.212	-13.019	2.4E-07	1.8624	-0.0943	-14.9346
816	0.5	Extremo 2A	-3.212	-4.463	2.4E-07	1.8624	-0.0943	-10.5641
816	1	Extremo 2A	-3.212	4.093	2.4E-07	1.8624	-0.0943	-10.4717
817	0	Extremo 1A	-3.212	-14.054	3.9E-08	1.6804	-0.0943	-8.8376
817	0.5	Extremo 1A	-3.212	-5.498	3.9E-08	1.6804	-0.0943	-3.9496
817	1	Extremo 1A	-3.212	3.058	3.9E-08	1.6804	-0.0943	-3.3397
817	0	Extremo 2A	-3.212	-14.048	3.1E-07	1.6797	-0.0943	-8.8305
817	0.5	Extremo 2A	-3.212	-5.492	3.1E-07	1.6797	-0.0943	-3.9455
817	1	Extremo 2A	-3.212	3.064	3.1E-07	1.6797	-0.0943	-3.3387
818	0	Extremo 1A	-3.212	-13.434	5E-08	1.1009	-0.0943	-2.6265
818	0.5	Extremo 1A	-3.212	-4.878	5E-08	1.1009	-0.0943	1.9515
818	1	Extremo 1A	-3.212	3.678	5E-08	1.1009	-0.0943	2.2515
818	0	Extremo 2A	-3.212	-13.428	3.8E-07	1.1004	-0.0943	-2.6253
818	0.5	Extremo 2A	-3.212	-4.872	3.8E-07	1.1004	-0.0943	1.9496
818	1	Extremo 2A	-3.212	3.685	3.8E-07	1.1004	-0.0943	2.2463
819	0	Extremo 1A	-3.212	-12.256	6.3E-08	0.6348	-0.0943	2.4731
819	0.5	Extremo 1A	-3.212	-3.7	6.3E-08	0.6348	-0.0943	6.4623
819	1	Extremo 1A	-3.212	4.856	6.3E-08	0.6348	-0.0943	6.1733
819	0	Extremo 2A	-3.212	-12.25	4.8E-07	0.6346	-0.0943	2.4685
819	0.5	Extremo 2A	-3.212	-3.694	4.8E-07	0.6346	-0.0943	6.4544
819	1	Extremo 2A	-3.212	4.862	4.8E-07	0.6346	-0.0943	6.1623
820	0	Extremo 1A	-3.212	-10.999	7.9E-08	0.3427	-0.0943	6.2312
820	0.5	Extremo 1A	-3.212	-2.443	7.9E-08	0.3427	-0.0943	9.5915
820	1	Extremo 1A	-3.212	6.114	7.9E-08	0.3427	-0.0943	8.6738
820	0	Extremo 2A	-3.212	-10.992	6E-07	0.3426	-0.0943	6.2207
820	0.5	Extremo 2A	-3.212	-2.436	6E-07	0.3426	-0.0943	9.5779
820	1	Extremo 2A	-3.212	6.12	6E-07	0.3426	-0.0943	8.6569
821	0	Extremo 1A	-3.212	-9.77	1E-07	0.152	-0.0943	8.6915
821	0.5	Extremo 1A	-3.212	-1.214	1E-07	0.152	-0.0943	11.4374
821	1	Extremo 1A	-3.212	7.343	1E-07	0.152	-0.0943	9.9052
821	0	Extremo 2A	-3.212	-9.764	7.6E-07	0.1519	-0.0943	8.6753
821	0.5	Extremo 2A	-3.212	-1.207	7.6E-07	0.1519	-0.0943	11.418
821	1	Extremo 2A	-3.212	7.349	7.6E-07	0.1519	-0.0943	9.8826
822	0	Extremo 1A	-3.212	-8.566	1.3E-07	8.2E-05	-0.0943	9.9098
822	0.5	Extremo 1A	-3.212	-0.00948	1.3E-07	8.2E-05	-0.0943	12.0536
822	1	Extremo 1A	-3.212	8.547	1.3E-07	8.2E-05	-0.0943	9.9192
822	0	Extremo 2A	-3.212	-8.559	9.5E-07	1.6E-05	-0.0943	9.8878
822	0.5	Extremo 2A	-3.212	-0.00304	9.5E-07	1.6E-05	-0.0943	12.0284
822	1	Extremo 2A	-3.212	8.553	9.5E-07	1.6E-05	-0.0943	9.8909
823	0	Extremo 1A	-3.212	-7.362	1.6E-07	-0.1518	-0.0943	9.9126
823	0.5	Extremo 1A	-3.212	1.195	1.6E-07	-0.1518	-0.0943	11.4543
823	1	Extremo 1A	-3.212	9.751	1.6E-07	-0.1518	-0.0943	8.7179
823	0	Extremo 2A	-3.212	-7.355	1.2E-06	-0.1519	-0.0943	9.885
823	0.5	Extremo 2A	-3.212	1.201	1.2E-06	-0.1519	-0.0943	11.4234
823	1	Extremo 2A	-3.212	9.757	1.2E-06	-0.1519	-0.0943	8.6837
824	0	Extremo 1A	-3.212	-6.133	2E-07	-0.3422	-0.0943	8.698
824	0.5	Extremo 1A	-3.212	2.423	2E-07	-0.3422	-0.0943	9.6253
824	1	Extremo 1A	-3.212	10.98	2E-07	-0.3422	-0.0943	6.2746
824	0	Extremo 2A	-3.212	-6.126	1.5E-06	-0.3424	-0.0943	8.6646
824	0.5	Extremo 2A	-3.212	2.43	1.5E-06	-0.3424	-0.0943	9.5887
824	1	Extremo 2A	-3.212	10.986	1.5E-06	-0.3424	-0.0943	6.2346
825	0	Extremo 1A	-3.212	-4.875	2.5E-07	-0.6337	-0.0943	6.2148
825	0.5	Extremo 1A	-3.212	3.681	2.5E-07	-0.6337	-0.0943	6.5134
825	1	Extremo 1A	-3.212	12.237	2.5E-07	-0.6337	-0.0943	2.5338
825	0	Extremo 2A	-3.212	-4.869	1.8E-06	-0.6342	-0.0943	6.1755
825	0.5	Extremo 2A	-3.212	3.688	1.8E-06	-0.6342	-0.0943	6.4708
825	1	Extremo 2A	-3.212	12.244	1.8E-06	-0.6342	-0.0943	2.4879
826	0	Extremo 1A	-3.212	-3.697	3.2E-07	-1.0984	-0.0943	2.3109
826	0.5	Extremo 1A	-3.212	4.859	3.2E-07	-1.0984	-0.0943	2.0205
826	1	Extremo 1A	-3.212	13.415	3.2E-07	-1.0984	-0.0943	-2.548
826	0	Extremo 2A	-3.212	-3.691	2.3E-06	-1.0996	-0.0943	2.2653
826	0.5	Extremo 2A	-3.212	4.865	2.3E-06	-1.0996	-0.0943	1.9717
826	1	Extremo 2A	-3.212	13.422	2.3E-06	-1.0996	-0.0943	-2.6001
827	0	Extremo 1A	-3.212	-3.075	4E-07	-1.6762	-0.0943	-3.2607
827	0.5	Extremo 1A	-3.212	5.481	4E-07	-1.6762	-0.0943	-3.862
827	1	Extremo 1A	-3.212	14.037	4E-07	-1.6762	-0.0943	-8.7415
827	0	Extremo 2A	-3.212	-3.07	2.8E-06	-1.6783	-0.0943	-3.3133
827	0.5	Extremo 2A	-3.212	5.486	2.8E-06	-1.6783	-0.0943	-3.9175
827	1	Extremo 2A	-3.212	14.043	2.8E-06	-1.6783	-0.0943	-8.7997
828	0	Extremo 1A	-3.212	-4.098	5E-07	-1.8583	-0.0943	-10.379
828	0.5	Extremo 1A	-3.212	4.458	5E-07	-1.8583	-0.0943	-10.4689
828	1	Extremo 1A	-3.212	13.014	5E-07	-1.8583	-0.0943	-14.837
828	0	Extremo 2A	-3.212	-4.096	3.5E-06	-1.8607	-0.0943	-10.4395
828	0.5	Extremo 2A	-3.212	4.46	3.5E-06	-1.8607	-0.0943	-10.5303
828	1	Extremo 2A	-3.212	13.016	3.5E-06	-1.8607	-0.0943	-14.8993
829	0	Extremo 1A	-3.212	-7.347	6.3E-07	-0.805	-0.0943	-16.9704
829	0.5	Extremo 1A	-3.212	1.209	6.3E-07	-0.805	-0.0943	-15.436
829	1	Extremo 1A	-3.212	9.766	6.3E-07	-0.805	-0.0943	-18.1798
829	0	Extremo 2A	-3.212	-7.352	4.4E-06	-0.8057	-0.0943	-17.0361
829	0.5	Extremo 2A	-3.212	1.204	4.4E-06	-0.8057	-0.0943	-15.499
829	1	Extremo 2A	-3.212	9.76	4.4E-06	-0.8057	-0.0943	-18.2401
830	0	Extremo 1A	-3.212	-9.739	7.9E-07	0.8044	-0.0943	-18.1786
830	0.5	Extremo 1A	-3.212	-1.183	7.9E-07	0.8044	-0.0943	-15.4481
830	1	Extremo 1A	-3.212	7.373	7.9E-07	0.8044	-0.0943	-16.9956
830	0	Extremo 2A	-3.212	-9.751	5.4E-06	0.8061	-0.0943	-18.2393
830	0.5	Extremo 2A	-3.212	-1.194	5.4E-06	0.8061	-0.0943	-15.503
830	1	Extremo 2A	-3.212	7.362	5.4E-06	0.8061	-0.0943	-17.0448
831	0	Extremo 1A	-3.212	-12.988	9.8E-07	1.8578	-0.0943	-14.8599
831	0.5	Extremo 1A	-3.212	-4.431	9.8E-07	1.8578	-0.0943	-10.5051
831	1	Extremo 1A	-3.212	4.125	9.8E-07	1.8578	-0.0943	-10.4284
831	0	Extremo 2A	-3.212	-13.007	6.6E-06	1.861	-0.0943	-14.9065
831	0.5	Extremo 2A	-3.212	-4.45	6.6E-06	1.861	-0.0943	-10.5423
831	1	Extremo 2A	-3.212	4.106	6.6E-06	1.861	-0.0943	-10.4562
832	0	Extremo 1A	-3.212	-14.011	1.2E-06	1.6757	-0.0943	-8.7884
832	0.5	Extremo 1A	-3.212	-5.454	1.2E-06	1.6757	-0.0943	-3.9222
832	1	Extremo 1A	-3.212	3.102	1.2E-06	1.6757	-0.0943	-3.3341
832	0	Extremo 2A	-3.212	-14.033	8.1E-06	1.6786	-0.0943	-8.8149
832	0.5	Extremo 2A	-3.212	-5.477	8.1E-06	1.6786	-0.0943	-3.9374
832	1	Extremo 2A	-3.212	3.079	8.1E-06	1.6786	-0.0943	-3.3381
833	0	Extremo 1A	-3.212	-13.389	1.5E-06	1.0979	-0.0943	-2.619
833	0.5	Extremo 1A	-3.212	-4.832	1.5E-06	1.0979	-0.0943	1.9362
833	1	Extremo 1A	-3.212	3.724	1.5E-06	1.0979	-0.0943	2.2133
833	0	Extremo 2A	-3.212	-13.412	9.8E-06	1.0999	-0.0943	-2.6233
833	0.5	Extremo 2A	-3.212	-4.856	9.8E-06	1.0999	-0.0943	1.9437
833	1	Extremo 2A	-3.212	3.7	9.8E-06	1.0999	-0.0943	2.2326
834	0	Extremo 1A	-3.212	-12.211	1.9E-06	0.6333	-0.0943	2.4387
834	0.5	Extremo 1A	-3.212	-3.654	1.9E-06	0.6333	-0.0943	6.405
834	1	Extremo 1A	-3.212	4.902	1.9E-06	0.6333	-0.0943	6.0931
834	0	Extremo 2A	-3.212	-12.234	1.2E-05	0.6346	-0.0943	2.4567
834	0.5	Extremo 2A	-3.212	-3.678	1.2E-05	0.6346	-0.0943	6.4348
834	1	Extremo 2A	-3.212	4.878	1.2E-05	0.6346	-0.0943	6.1348
835	0	Extremo 1A	-3.212	-10.953	2.4E-06	0.3418	-0.0943	6.1555
835	0.5	Extremo 1A	-3.212	-2.397	2.4E-06	0.3418	-0.0943	9.4929
835	1	Extremo 1A	-3.212	6.159	2.4E-06	0.3418	-0.0943	8.5523
835	0	Extremo 2A	-3.212	-10.977	1.4E-05	0.3427	-0.0943	6.1954
835	0.5	Extremo 2A	-3.212	-2.42	1.4E-05	0.3427	-0.0943	9.5447
835	1	Extremo 2A	-3.212	6.136	1.4E-05	0.3427	-0.0943	8.6159
836	0	Extremo 1A	-3.212	-9.724	3E-06	0.1515	-0.0943	8.5748
836	0.5	Extremo 1A	-3.212	-1.168	3E-06	0.1515	-0.0943	11.2979
836	1	Extremo 1A	-3.212	7.388	3E-06	0.1515	-0.0943	9.7428
836	0	Extremo 2A	-3.212	-9.748	1.7E-05	0.1521	-0.0943	8.6365
836	0.5	Extremo 2A	-3.212	-1.192	1.7E-05	0.1521	-0.0943	11.3714
836	1	Extremo 2A	-3.212	7.365	1.7E-05	0.1521	-0.0943	9.8282
837	0	Extremo 1A	-3.212	-8.52	3.7E-06	-0.00036	-0.0943	9.7523
837	0.5	Extremo 1A	-3.212	0.036	3.7E-06	-0.00036	-0.0943	11.8732
837	1	Extremo 1A	-3.212	8.593	3.7E-06	-0.00036	-0.0943	9.7159
837	0	Extremo 2A	-3.212	-8.544	2.1E-05	0.00011	-0.0943	9.8356

837	0.5	Extremo 2A	-3.212	0.013	2.1E-05	0.00011	-0.0943	11.9684
837	1	Extremo 2A	-3.212	8.569	2.1E-05	0.00011	-0.0943	9.823
838	0	Extremo 1A	-3.212	-7.315	4.5E-06	-0.1524	-0.0943	9.7145
838	0.5	Extremo 1A	-3.212	1.241	4.5E-06	-0.1524	-0.0943	11.2331
838	1	Extremo 1A	-3.212	9.797	4.5E-06	-0.1524	-0.0943	8.4735
838	0	Extremo 2A	-3.212	-7.339	2.4E-05	-0.1521	-0.0943	9.8192
838	0.5	Extremo 2A	-3.212	1.217	2.4E-05	-0.1521	-0.0943	11.3498
838	1	Extremo 2A	-3.212	9.773	2.4E-05	-0.1521	-0.0943	8.6023
839	0	Extremo 1A	-3.212	-6.086	5.6E-06	-0.3437	-0.0943	8.459
839	0.5	Extremo 1A	-3.212	2.47	5.6E-06	-0.3437	-0.0943	9.3629
839	1	Extremo 1A	-3.212	11.027	5.6E-06	-0.3437	-0.0943	5.9887
839	0	Extremo 2A	-3.212	-6.11	2.9E-05	-0.3434	-0.0943	8.585
839	0.5	Extremo 2A	-3.212	2.446	2.9E-05	-0.3434	-0.0943	9.5012
839	1	Extremo 2A	-3.212	11.002	2.9E-05	-0.3434	-0.0943	6.1393
840	0	Extremo 1A	-3.212	-4.828	6.9E-06	-0.6375	-0.0943	5.9339
840	0.5	Extremo 1A	-3.212	3.729	6.9E-06	-0.6375	-0.0943	6.2086
840	1	Extremo 1A	-3.212	12.285	6.9E-06	-0.6375	-0.0943	2.2053
840	0	Extremo 2A	-3.212	-4.853	3.3E-05	-0.6366	-0.0943	6.0813
840	0.5	Extremo 2A	-3.212	3.703	3.3E-05	-0.6366	-0.0943	6.3687
840	1	Extremo 2A	-3.212	12.26	3.3E-05	-0.6366	-0.0943	2.378
841	0	Extremo 1A	-3.212	-3.65	8.4E-06	-1.1069	-0.0943	1.9851
841	0.5	Extremo 1A	-3.212	4.906	8.4E-06	-1.1069	-0.0943	1.6711
841	1	Extremo 1A	-3.212	13.462	8.4E-06	-1.1069	-0.0943	-2.9209
841	0	Extremo 2A	-3.212	-3.676	3.7E-05	-1.1046	-0.0943	2.155
841	0.5	Extremo 2A	-3.212	4.88	3.7E-05	-1.1046	-0.0943	1.8538
841	1	Extremo 2A	-3.212	13.437	3.7E-05	-1.1046	-0.0943	-2.7254
842	0	Extremo 1A	-3.212	-3.036	1E-05	-1.6912	-0.0943	-3.6376
842	0.5	Extremo 1A	-3.212	5.52	1E-05	-1.6912	-0.0943	-4.2587
842	1	Extremo 1A	-3.212	14.077	1E-05	-1.6912	-0.0943	-9.158
842	0	Extremo 2A	-3.212	-3.059	4.2E-05	-1.6867	-0.0943	-3.4428
842	0.5	Extremo 2A	-3.212	5.498	4.2E-05	-1.6867	-0.0943	-4.0526
842	1	Extremo 2A	-3.212	14.054	4.2E-05	-1.6867	-0.0943	-8.9405
843	0	Extremo 1A	-3.212	-4.085	1.3E-05	-1.8757	-0.0943	-10.812
843	0.5	Extremo 1A	-3.212	4.471	1.3E-05	-1.8757	-0.0943	-10.9083
843	1	Extremo 1A	-3.212	13.027	1.3E-05	-1.8757	-0.0943	-15.2827
843	0	Extremo 2A	-3.213	-4.096	4.5E-05	-1.8715	-0.0943	-10.5908
843	0.5	Extremo 2A	-3.213	4.46	4.5E-05	-1.8715	-0.0943	-10.6817
843	1	Extremo 2A	-3.213	13.016	4.5E-05	-1.8715	-0.0943	-15.0507
844	0	Extremo 1A	-3.212	-7.387	1.5E-05	-0.8111	-0.0943	-17.441
844	0.5	Extremo 1A	-3.212	1.17	1.5E-05	-0.8111	-0.0943	-15.8867
844	1	Extremo 1A	-3.212	9.726	1.5E-05	-0.8111	-0.0943	-18.6105
844	0	Extremo 2A	-3.213	-7.373	4.6E-05	-0.814	-0.0943	-17.2033
844	0.5	Extremo 2A	-3.213	1.183	4.6E-05	-0.814	-0.0943	-15.6558
844	1	Extremo 2A	-3.213	9.739	4.6E-05	-0.814	-0.0943	-18.3864
845	0	Extremo 1A	-3.212	-9.823	1.8E-05	0.8156	-0.0943	-18.6133
845	0.5	Extremo 1A	-3.212	-1.266	1.8E-05	0.8156	-0.0943	-15.8411
845	1	Extremo 1A	-3.212	7.29	1.8E-05	0.8156	-0.0943	-17.347
845	0	Extremo 2A	-3.213	-9.789	4.4E-05	0.8026	-0.0943	-18.3964
845	0.5	Extremo 2A	-3.213	-1.233	4.4E-05	0.8026	-0.0943	-15.6407
845	1	Extremo 2A	-3.213	7.323	4.4E-05	0.8026	-0.0943	-17.1632
846	0	Extremo 1A	-3.212	-13.124	2.2E-05	1.8802	-0.0943	-15.1945
846	0.5	Extremo 1A	-3.212	-4.568	2.2E-05	1.8802	-0.0943	-10.7716
846	1	Extremo 1A	-3.212	3.989	2.2E-05	1.8802	-0.0943	-10.6269
846	0	Extremo 2A	-3.213	-13.066	3.7E-05	1.8601	-0.0943	-15.0306
846	0.5	Extremo 2A	-3.213	-4.51	3.7E-05	1.8601	-0.0943	-10.6366
846	1	Extremo 2A	-3.213	4.046	3.7E-05	1.8601	-0.0943	-10.5207
847	0	Extremo 1A	-3.212	-14.174	2.6E-05	1.6955	-0.0943	-8.9787
847	0.5	Extremo 1A	-3.212	-5.617	2.6E-05	1.6955	-0.0943	-4.031
847	1	Extremo 1A	-3.212	2.939	2.6E-05	1.6955	-0.0943	-3.3614
847	0	Extremo 2A	-3.213	-14.104	2.1E-05	1.6755	-0.0943	-8.8902
847	0.5	Extremo 2A	-3.213	-5.548	2.1E-05	1.6755	-0.0943	-3.9774
847	1	Extremo 2A	-3.213	3.009	2.1E-05	1.6755	-0.0943	-3.3426
848	0	Extremo 1A	-3.212	-13.559	3E-05	1.1111	-0.0943	-2.6506
848	0.5	Extremo 1A	-3.212	-5.003	3E-05	1.1111	-0.0943	1.9899
848	1	Extremo 1A	-3.212	3.553	3E-05	1.1111	-0.0943	2.3523
848	0	Extremo 2A	-3.213	-13.487	-7.9E-06	1.0936	-0.0943	-2.6449
848	0.5	Extremo 2A	-3.213	-4.93	-7.9E-06	1.0936	-0.0943	1.9593
848	1	Extremo 2A	-3.213	3.626	-7.9E-06	1.0936	-0.0943	2.2854
849	0	Extremo 1A	-3.212	-12.382	3.5E-05	0.6413	-0.0943	2.5664
849	0.5	Extremo 1A	-3.212	-3.826	3.5E-05	0.6413	-0.0943	6.6183
849	1	Extremo 1A	-3.212	4.731	3.5E-05	0.6413	-0.0943	6.3921
849	0	Extremo 2A	-3.213	-12.309	-5.6E-05	0.6262	-0.0943	2.489
849	0.5	Extremo 2A	-3.213	-3.753	-5.6E-05	0.6262	-0.0943	6.5046
849	1	Extremo 2A	-3.213	4.803	-5.6E-05	0.6262	-0.0942	6.2422
850	0	Extremo 1A	-3.212	-11.124	4E-05	0.3471	-0.0943	6.4404
850	0.5	Extremo 1A	-3.212	-2.568	4E-05	0.3471	-0.0943	9.8633
850	1	Extremo 1A	-3.212	5.988	4E-05	0.3471	-0.0943	9.0082
850	0	Extremo 2A	-3.213	-11.052	-0.00013	0.3339	-0.0943	6.2811
850	0.5	Extremo 2A	-3.213	-2.495	-0.00013	0.3339	-0.0943	9.6679
850	1	Extremo 2A	-3.213	6.061	-0.00013	0.3339	-0.0942	8.7765
851	0	Extremo 1A	-3.212	-9.895	4.5E-05	0.1551	-0.0943	9.0154
851	0.5	Extremo 1A	-3.212	-1.339	4.5E-05	0.1551	-0.0943	11.824
851	1	Extremo 1A	-3.212	7.217	4.5E-05	0.1551	-0.0943	10.3544
851	0	Extremo 2A	-3.212	-9.822	-0.00025	0.1443	-0.0944	8.7758
851	0.5	Extremo 2A	-3.212	-1.266	-0.00025	0.1443	-0.0942	11.548
851	1	Extremo 2A	-3.212	7.29	-0.00025	0.1443	-0.0941	10.042
852	0	Extremo 1A	-3.213	-8.692	4.9E-05	0.0023	-0.0943	10.3475
852	0.5	Extremo 1A	-3.213	-0.135	4.9E-05	0.0023	-0.0943	12.5542
852	1	Extremo 1A	-3.213	8.421	4.9E-05	0.0023	-0.0943	10.4828
852	0	Extremo 2A	-3.212	-8.617	-0.00042	-0.0047	-0.0944	10.0297
852	0.5	Extremo 2A	-3.212	-0.061	-0.00042	-0.0047	-0.0942	12.1993
852	1	Extremo 2A	-3.212	8.495	-0.00042	-0.0047	-0.094	10.0908
853	0	Extremo 1A	-3.213	-7.489	5.2E-05	-0.1501	-0.0943	10.4634
853	0.5	Extremo 1A	-3.213	1.068	5.2E-05	-0.1501	-0.0943	12.0687
853	1	Extremo 1A	-3.213	9.624	5.2E-05	-0.1501	-0.0943	9.3958
853	0	Extremo 2A	-3.211	-7.412	-0.00068	-0.151	-0.0945	10.0709
853	0.5	Extremo 2A	-3.211	1.145	-0.00068	-0.151	-0.0942	11.6376
853	1	Extremo 2A	-3.211	9.701	-0.00068	-0.151	-0.0938	8.9261
854	0	Extremo 1A	-3.213	-6.262	5.1E-05	-0.34	-0.0943	9.3615
854	0.5	Extremo 1A	-3.213	2.294	5.1E-05	-0.34	-0.0943	10.3536
854	1	Extremo 1A	-3.213	10.85	5.1E-05	-0.34	-0.0943	7.0677
854	0	Extremo 2A	-3.21	-6.18	-0.00105	-0.3316	-0.0947	8.8995
854	0.5	Extremo 2A	-3.21	2.376	-0.00105	-0.3316	-0.0941	9.8504
854	1	Extremo 2A	-3.21	10.933	-0.00105	-0.3316	-0.0936	6.5231
855	0	Extremo 1A	-3.213	-5.008	4.5E-05	-0.6279	-0.0943	6.9921
855	0.5	Extremo 1A	-3.213	3.548	4.5E-05	-0.6279	-0.0943	7.3572
855	1	Extremo 1A	-3.213	12.104	4.5E-05	-0.6279	-0.0943	3.4443
855	0	Extremo 2A	-3.208	-4.916	-0.00158	-0.6065	-0.0949	6.4686
855	0.5	Extremo 2A	-3.208	3.64	-0.00158	-0.6065	-0.0941	6.7877
855	1	Extremo 2A	-3.208	12.196	-0.00158	-0.6065	-0.0933	2.8287
856	0	Extremo 1A	-3.213	-3.832	3.2E-05	-1.084	-0.0943	3.2078
856	0.5	Extremo 1A	-3.213	4.725	3.2E-05	-1.084	-0.0943	2.9846
856	1	Extremo 1A	-3.213	13.281	3.2E-05	-1.084	-0.0943	-1.5167
856	0	Extremo 2A	-3.206	-3.725	-0.00233	-1.0453	-0.0951	2.6329
856	0.5	Extremo 2A	-3.206	4.831	-0.00233	-1.0453	-0.094	2.3564
856	1	Extremo 2A	-3.206	13.387	-0.00233	-1.0453	-0.0928	-2.1983
857	0	Extremo 1A	-3.213	-3.194	5.3E-06	-1.6496	-0.0943	-2.2309
857	0.5	Extremo 1A	-3.213	5.362	5.3E-06	-1.6496	-0.0943	-2.7729
857	1	Extremo 1A	-3.213	13.918	5.3E-06	-1.6496	-0.0943	-7.593
857	0	Extremo 2A	-3.202	-3.071	-0.00338	-1.5885	-0.0955	-2.8458
857	0.5	Extremo 2A	-3.202	5.485	-0.00338	-1.5885	-0.0939	-3.4493
857	1	Extremo 2A	-3.202	14.041	-0.00338	-1.5885	-0.0922	-8.3309
858	0	Extremo 1A	-3.213	-4.152	-4E-05	-1.8313	-0.0943	-9.2066
858	0.5	Extremo 1A	-3.213	4.404	-4E-05	-1.8313	-0.0943	-9.2697
858	1	Extremo 1A	-3.213	12.961	-4E-05	-1.8313	-0.0943	-13.611
858	0	Extremo 2A	-3.197	-4.022	-0.00484	-1.737	-0.0961	-9.8458
858	0.5	Extremo 2A	-3.197	4.534	-0.00484	-1.737	-0.0937	-9.9736
858	1	Extremo 2A	-3.197	13.09	-0.00484	-1.737	-0.0913	-14.3796
859	0	Extremo 1A	-3.213	-7.268	-0.00011	-0.8143	-0.0943	-15.7078
859	0.5	Extremo 1A	-3.213	1.288	-0.00011	-0.8143	-0.0943	-14.2126
859	1	Extremo 1A	-3.213	9.844	-0.00011	-0.8143	-0.0942	-16.9956
859	0	Extremo 2A	-3.19	-7.151	-0.00685	-0.6679	-0.0969	-16.3298
859	0.5	Extremo 2A	-3.19	1.405	-0.00685	-0.6679	-0.0935	-14.8933
859	1	Extremo 2A	-3.19	9.961	-0.00685	-0.6679	-0.09	-17.7348
860	0	Extremo 1A	-3.212	-9.554	-0.00022	0.7422	-0.0944	-17.0235
860	0.5	Extremo 1A	-3.212	-0.998	-0.00022	0.7422	-0.0942	-14.3854
860	1	Extremo 1A	-3.212	7.558	-0.00022	0.7422	-0.0941	-16.0254
860	0	Extremo 2A	-3.18	-9.436	-0.00959	0.9482	-0.098	-17.5302
860	0.5	Extremo 2A	-3.18	-0.879	-0.00959	0.9482	-0.0932	-14.9515
860	1	Extremo 2A	-3.18	7.677	-0.00959	0.9482	-0.0884	-16.6509
861	0	Extremo 1A	-3.212	-12.671	-0.00039	1.7597	-0.0944	-13.9843
861	0.5	Extremo 1A	-3.212	-4.114	-0.00039	1.7597	-0.0942	-9.788
861	1	Extremo 1A	-3.212	4.442	-0.00039	1.7597	-0.094	-9.8698
861	0	Extremo 2A	-3.166	-12.565	-0.013	2.0155	-0.0994	-14.2922

861	0.5	Extremo 2A	-3.166	-4.009	-0.013	2.0155	-0.0928	-10.1487
861	1	Extremo 2A	-3.166	4.547	-0.013	2.0155	-0.0861	-10.2833
862	0	Extremo 1A	-3.211	-13.628	-0.00064	1.5791	-0.0945	-8.3112
862	0.5	Extremo 1A	-3.211	-5.072	-0.00064	1.5791	-0.0942	-3.6362
862	1	Extremo 1A	-3.211	3.484	-0.00064	1.5791	-0.0939	-3.2394
862	0	Extremo 2A	-3.147	-13.518	-0.018	1.8631	-0.1014	-8.3625
862	0.5	Extremo 2A	-3.147	-4.962	-0.018	1.8631	-0.0922	-3.7424
862	1	Extremo 2A	-3.147	3.594	-0.018	1.8631	-0.0831	-3.4005
863	0	Extremo 1A	-3.21	-12.99	-0.00101	1.0157	-0.0946	-2.5789
863	0.5	Extremo 1A	-3.21	-4.433	-0.00101	1.0157	-0.0941	1.7769
863	1	Extremo 1A	-3.21	4.123	-0.00101	1.0157	-0.0936	1.8545
863	0	Extremo 2A	-3.12	-12.868	-0.025	1.313	-0.1041	-2.3521
863	0.5	Extremo 2A	-3.12	-4.311	-0.025	1.313	-0.0916	1.9426
863	1	Extremo 2A	-3.12	4.245	-0.025	1.313	-0.079	1.9592
864	0	Extremo 1A	-3.209	-11.811	-0.00153	0.5634	-0.0948	2.0399
864	0.5	Extremo 1A	-3.209	-3.255	-0.00153	0.5634	-0.0941	5.8066
864	1	Extremo 1A	-3.209	5.301	-0.00153	0.5634	-0.0933	5.295
864	0	Extremo 2A	-3.084	-11.682	-0.034	0.8624	-0.1076	2.547
864	0.5	Extremo 2A	-3.084	-3.126	-0.034	0.8624	-0.0907	6.2489
864	1	Extremo 2A	-3.084	5.431	-0.034	0.8624	-0.0737	5.6726
865	0	Extremo 1A	-3.206	-10.555	-0.00227	0.2818	-0.0951	5.3241
865	0.5	Extremo 1A	-3.206	-1.999	-0.00227	0.2818	-0.094	8.4625
865	1	Extremo 1A	-3.206	6.558	-0.00227	0.2818	-0.0928	7.3227
865	0	Extremo 2A	-3.035	-10.428	-0.046	0.5686	-0.1123	6.1043
865	0.5	Extremo 2A	-3.035	-1.872	-0.046	0.5686	-0.0895	9.1792
865	1	Extremo 2A	-3.035	6.685	-0.046	0.5686	-0.0668	7.9759
866	0	Extremo 1A	-3.203	-9.324	-0.00331	0.1025	-0.0955	7.3183
866	0.5	Extremo 1A	-3.203	-0.768	-0.00331	0.1025	-0.0939	9.8413
866	1	Extremo 1A	-3.203	7.788	-0.00331	0.1025	-0.0922	8.0861
866	0	Extremo 2A	-2.97	-9.212	-0.061	0.3583	-0.1184	8.3552
866	0.5	Extremo 2A	-2.97	-0.656	-0.061	0.3583	-0.0881	10.8221
866	1	Extremo 2A	-2.97	7.9	-0.061	0.3583	-0.0577	9.011
867	0	Extremo 1A	-3.198	-8.113	-0.00475	-0.0329	-0.0961	8.0803
867	0.5	Extremo 1A	-3.198	0.443	-0.00475	-0.0329	-0.0937	9.9978
867	1	Extremo 1A	-3.198	8.999	-0.00475	-0.0329	-0.0913	7.6371
867	0	Extremo 2A	-2.884	-8.032	-0.08	0.167	-0.1264	9.344
867	0.5	Extremo 2A	-2.884	0.524	-0.08	0.167	-0.0863	11.2212
867	1	Extremo 2A	-2.884	9.08	-0.08	0.167	-0.0461	8.8203
868	0	Extremo 1A	-3.191	-6.895	-0.00675	-0.1599	-0.0968	7.6416
868	0.5	Extremo 1A	-3.191	1.662	-0.00675	-0.1599	-0.0935	8.9499
868	1	Extremo 1A	-3.191	10.218	-0.00675	-0.1599	-0.0901	5.98
868	0	Extremo 2A	-2.771	-6.87	-0.106	-0.0477	-0.1368	9.0838
868	0.5	Extremo 2A	-2.771	1.687	-0.106	-0.0477	-0.0841	10.3795
868	1	Extremo 2A	-2.771	10.243	-0.106	-0.0477	-0.0313	7.3971
869	0	Extremo 1A	-3.181	-5.639	-0.00948	-0.3154	-0.0979	6.0076
869	0.5	Extremo 1A	-3.181	2.917	-0.00948	-0.3154	-0.0932	6.6883
869	1	Extremo 1A	-3.181	11.473	-0.00948	-0.3154	-0.0884	3.0908
869	0	Extremo 2A	-2.623	-5.706	-0.138	-0.329	-0.1503	7.5557
869	0.5	Extremo 2A	-2.623	2.85	-0.138	-0.329	-0.0813	8.2696
869	1	Extremo 2A	-2.623	11.407	-0.138	-0.329	-0.0122	4.7053
870	0	Extremo 1A	-3.167	-4.338	-0.013	-0.5633	-0.0994	3.1335
870	0.5	Extremo 1A	-3.167	4.219	-0.013	-0.5633	-0.0928	3.1632
870	1	Extremo 1A	-3.167	12.775	-0.013	-0.5633	-0.0862	-1.0852
870	0	Extremo 2A	-2.435	-4.547	-0.179	-0.7424	-0.1669	4.6891
870	0.5	Extremo 2A	-2.435	4.01	-0.179	-0.7424	-0.0774	4.8233
870	1	Extremo 2A	-2.435	12.566	-0.179	-0.7424	0.0122	0.6794
871	0	Extremo 1A	-3.148	-3.1	-0.018	-0.9797	-0.1013	-1.1333
871	0.5	Extremo 1A	-3.148	5.456	-0.018	-0.9797	-0.0922	-1.7222
871	1	Extremo 1A	-3.148	14.012	-0.018	-0.9797	-0.0831	-6.5893
871	0	Extremo 2A	-2.198	-3.513	-0.227	-1.3567	-0.1849	0.3126
871	0.5	Extremo 2A	-2.198	5.043	-0.227	-1.3567	-0.0712	-0.0698
871	1	Extremo 2A	-2.198	13.599	-0.227	-1.3567	0.0426	-4.7303
872	0	Extremo 1A	-3.121	-2.445	-0.025	-1.4978	-0.104	-7.0506
872	0.5	Extremo 1A	-3.121	6.111	-0.025	-1.4978	-0.0915	-7.9673
872	1	Extremo 1A	-3.121	14.668	-0.025	-1.4978	-0.0791	-13.1621
872	0	Extremo 2A	-1.917	-3.111	-0.273	-2.0885	-0.1974	-5.8296
872	0.5	Extremo 2A	-1.917	5.446	-0.273	-2.0885	-0.061	-6.4133
872	1	Extremo 2A	-1.917	14.002	-0.273	-2.0885	0.0754	-11.2751
873	0	Extremo 1A	-3.085	-3.571	-0.034	-1.5605	-0.1075	-14.4758
873	0.5	Extremo 1A	-3.085	4.986	-0.034	-1.5605	-0.0906	-14.8295
873	1	Extremo 1A	-3.085	13.542	-0.034	-1.5605	-0.0738	-19.4614
873	0	Extremo 2A	-1.606	-4.483	-0.293	-2.364	-0.1935	-13.5708
873	0.5	Extremo 2A	-1.606	4.073	-0.293	-2.364	-0.0472	-13.4682
873	1	Extremo 2A	-1.606	12.629	-0.293	-2.364	0.0991	-17.6438
874	0	Extremo 1A	-3.037	-7.129	-0.045	-0.2506	-0.1122	-21.1187
874	0.5	Extremo 1A	-3.037	1.427	-0.045	-0.2506	-0.0895	-19.6932
874	1	Extremo 1A	-3.037	9.983	-0.045	-0.2506	-0.0668	-22.5459
874	0	Extremo 2A	-1.296	-8.211	-0.273	-1.2537	-0.1697	-20.61
874	0.5	Extremo 2A	-1.296	0.346	-0.273	-1.2537	-0.0333	-18.6437
874	1	Extremo 2A	-1.296	8.902	-0.273	-1.2537	0.1031	-20.9556
875	0	Extremo 1A	-2.972	-9.735	-0.061	1.662	-0.1183	-21.6251
875	0.5	Extremo 1A	-2.972	-1.179	-0.061	1.662	-0.088	-18.8966
875	1	Extremo 1A	-2.972	7.377	-0.061	1.662	-0.0577	-20.4463
875	0	Extremo 2A	-1.014	-10.904	-0.227	0.505	-0.1369	-21.6292
875	0.5	Extremo 2A	-1.014	-2.348	-0.227	0.505	-0.0232	-18.3161
875	1	Extremo 2A	-1.014	6.208	-0.227	0.505	0.0906	-19.2811
876	0	Extremo 1A	-2.886	-13.319	-0.08	2.9253	-0.1264	-16.9726
876	0.5	Extremo 1A	-2.886	-4.763	-0.08	2.9253	-0.0862	-12.452
876	1	Extremo 1A	-2.886	3.793	-0.08	2.9253	-0.046	-12.2095
876	0	Extremo 2A	-0.778	-14.467	-0.179	1.6961	-0.1065	-17.5729
876	0.5	Extremo 2A	-0.778	-5.91	-0.179	1.6961	-0.0169	-12.4786
876	1	Extremo 2A	-0.778	2.646	-0.179	1.6961	0.0726	-11.6626
877	0	Extremo 1A	-2.772	-14.504	-0.106	2.7644	-0.1369	-9.1599
877	0.5	Extremo 1A	-2.772	-5.948	-0.106	2.7644	-0.084	-4.047
877	1	Extremo 1A	-2.772	2.609	-0.106	2.7644	-0.0311	-3.2123
877	0	Extremo 2A	-0.589	-15.583	-0.138	1.5669	-0.082	-10.3877
877	0.5	Extremo 2A	-0.589	-7.027	-0.138	1.5669	-0.013	-4.7352
877	1	Extremo 2A	-0.589	1.529	-0.138	1.5669	0.056	-3.3608
878	0	Extremo 1A	-2.624	-13.954	-0.139	2.0886	-0.1504	-1.1644
878	0.5	Extremo 1A	-2.624	-5.397	-0.139	2.0886	-0.0811	3.6733
878	1	Extremo 1A	-2.624	3.159	-0.139	2.0886	-0.0119	4.2329
878	0	Extremo 2A	-0.442	-14.924	-0.105	1.0177	-0.063	-2.9715
878	0.5	Extremo 2A	-0.442	-6.368	-0.105	1.0177	-0.0102	2.3515
878	1	Extremo 2A	-0.442	2.188	-0.105	1.0177	0.0425	3.3965
879	0	Extremo 1A	-2.435	-12.889	-0.18	1.4492	-0.1671	5.6296
879	0.5	Extremo 1A	-2.435	-4.333	-0.18	1.4492	-0.0772	9.935
879	1	Extremo 1A	-2.435	4.224	-0.18	1.4492	0.0128	9.9622
879	0	Extremo 2A	-0.329	-13.687	-0.08	0.5886	-0.0481	3.3611
879	0.5	Extremo 2A	-0.329	-5.131	-0.08	0.5886	-0.008	8.0658
879	1	Extremo 2A	-0.329	3.425	-0.08	0.5886	0.0321	8.4923
880	0	Extremo 1A	-2.197	-11.848	-0.229	0.9164	-0.1853	10.9237
880	0.5	Extremo 1A	-2.197	-3.292	-0.229	0.9164	-0.0709	14.7088
880	1	Extremo 1A	-2.197	5.264	-0.229	0.9164	0.0435	14.2158
880	0	Extremo 2A	-0.243	-12.386	-0.061	0.3369	-0.0365	8.3625
880	0.5	Extremo 2A	-0.243	-3.83	-0.061	0.3369	-0.0062	12.4166
880	1	Extremo 2A	-0.243	4.726	-0.061	0.3369	0.024	12.1925
881	0	Extremo 1A	-1.914	-10.948	-0.275	0.4317	-0.1981	14.7393
881	0.5	Extremo 1A	-1.914	-2.392	-0.275	0.4317	-0.0606	18.0743
881	1	Extremo 1A	-1.914	6.164	-0.275	0.4317	0.0768	17.1312
881	0	Extremo 2A	-0.178	-11.13	-0.045	0.1831	-0.0275	12.0781
881	0.5	Extremo 2A	-0.178	-2.573	-0.045	0.1831	-0.0048	15.5038
881	1	Extremo 2A	-0.178	5.983	-0.045	0.1831	0.0179	14.6514
882	0	Extremo 1A	-1.6	-10.144	-0.296	-0.0377	-0.1945	17.1453
882	0.5	Extremo 1A	-1.6	-1.588	-0.296	-0.0377	-0.0466	20.0782
882	1	Extremo 1A	-1.6	6.969	-0.296	-0.0377	0.1013	18.733
882	0	Extremo 2A	-0.13	-9.906	-0.034	0.0629	-0.0205	14.5632
882	0.5	Extremo 2A	-0.13	-1.349	-0.034	0.0629	-0.0036	17.377
882	1	Extremo 2A	-0.13	7.207	-0.034	0.0629	0.0132	15.9126
883	0	Extremo 1A	-1.284	-9.335	-0.278	-0.4885	-0.1714	18.2075
883	0.5	Extremo 1A	-1.284	-0.778	-0.278	-0.4885	-0.0326	20.7357
883	1	Extremo 1A	-1.284	7.778	-0.278	-0.4885	0.1062	18.9858
883	0	Extremo 2A	-0.094	-8.685	-0.025	-0.0574	-0.0152	15.84
883	0.5	Extremo 2A	-0.094	-0.129	-0.025	-0.0574	-0.0027	18.0435
883	1	Extremo 2A	-0.094	8.427	-0.025	-0.0574	0.0097	15.969
884	0	Extremo 1A	-0.995	-8.427	-0.235	-0.9018	-0.1395	17.967
884	0.5	Extremo 1A	-0.995	0.13	-0.235	-0.9018	-0.0222	20.0413
884	1	Extremo 1A	-0.995	8.686	-0.235	-0.9018	0.0951	17.8374
884	0	Extremo 2A	-0.067	-7.451	-0.018	-0.1978	-0.0112	15.8986
884	0.5	Extremo 2A	-0.067	1.105	-0.018	-0.1978	-0.002	17.4851
884	1	Extremo 2A	-0.067	9.661	-0.018	-0.1978	0.0071	14.7934
885	0	Extremo 1A	-0.748	-7.409	-0.19	-1.2455	-0.1105	16.4197
885	0.5	Extremo 1A	-0.748	1.147	-0.19	-1.2455	-0.0157	17.9851
885	1	Extremo 1A	-0.748	9.704	-0.19	-1.2455	0.0791	15.2723
885	0	Extremo 2A	-0.048	-6.238	-0.013	-0.3633	-0.0082	14.6882

885	0.5	Extremo 2A	-0.048	2.319	-0.013	-0.3633	-0.0015	15.6679
885	1	Extremo 2A	-0.048	10.875	-0.013	-0.3633	0.0052	12.3695
886	0	Extremo 1A	-0.543	-6.455	-0.154	-1.4147	-0.0884	13.5351
886	0.5	Extremo 1A	-0.543	2.101	-0.154	-1.4147	-0.0115	14.6236
886	1	Extremo 1A	-0.543	10.657	-0.154	-1.4147	0.0654	11.4339
886	0	Extremo 2A	-0.033	-5.237	-0.00989	-0.4732	-0.006	12.132
886	0.5	Extremo 2A	-0.033	3.32	-0.00989	-0.4732	-0.0011	12.6113
886	1	Extremo 2A	-0.033	11.876	-0.00989	-0.4732	0.0039	8.8125
887	0	Extremo 1A	-0.372	-5.971	-0.13	-1.0894	-0.0731	9.4782
887	0.5	Extremo 1A	-0.372	2.585	-0.13	-1.0894	-0.008	10.3249
887	1	Extremo 1A	-0.372	11.141	-0.13	-1.0894	0.0572	6.8934
887	0	Extremo 2A	-0.023	-4.874	-0.00772	-0.21	-0.0046	8.3509
887	0.5	Extremo 2A	-0.023	3.683	-0.00772	-0.21	-0.00079	8.6487
887	1	Extremo 2A	-0.023	12.239	-0.00772	-0.21	0.0031	4.6684
888	0	Extremo 1A	-0.226	-5.891	-0.119	0.1649	-0.0623	5.2987
888	0.5	Extremo 1A	-0.226	2.665	-0.119	0.1649	-0.0031	6.1052
888	1	Extremo 1A	-0.226	11.221	-0.119	0.1649	0.0562	2.6335
888	0	Extremo 2A	-0.014	-5.13	-0.00685	0.8898	-0.0039	4.3819
888	0.5	Extremo 2A	-0.014	3.427	-0.00685	0.8898	-0.00044	4.8076
888	1	Extremo 2A	-0.014	11.983	-0.00685	0.8898	0.003	0.9552
889	0	Extremo 1A	-0.101	-3.711	-0.102	1.6812	-0.045	2.9847
889	0.5	Extremo 1A	-0.101	4.846	-0.102	1.6812	0.0062	2.701
889	1	Extremo 1A	-0.101	13.402	-0.102	1.6812	0.0575	-1.8609
889	0	Extremo 2A	-0.00635	-3.536	-0.00639	2.2093	-0.003	2.3206
889	0.5	Extremo 2A	-0.00635	5.02	-0.00639	2.2093	0.00024	1.9495
889	1	Extremo 2A	-0.00635	13.577	-0.00639	2.2093	0.0034	-2.6997
890	0	Extremo 1A	0.099	-9.902	0.159	0.4754	0.087	-2.1909
890	0.5	Extremo 1A	0.099	-2.261	0.159	0.4754	0.0077	0.8499
890	1	Extremo 1A	0.099	5.379	0.159	0.4754	-0.0716	0.0704
890	0	Extremo 2A	0.099	-9.902	0.159	0.4754	0.087	-2.1909
890	0.5	Extremo 2A	0.099	-2.261	0.159	0.4754	0.0077	0.8499
890	1	Extremo 2A	0.099	5.379	0.159	0.4754	-0.0716	0.0704
891	0	Extremo 1A	0.71	-8.779	0.201	0.2552	0.1052	-1.3173
891	0.5	Extremo 1A	0.71	-1.138	0.201	0.2552	0.0047	1.162
891	1	Extremo 1A	0.71	6.502	0.201	0.2552	-0.0957	-0.179
891	0	Extremo 2A	0.71	-8.779	0.201	0.2552	0.1052	-1.3173
891	0.5	Extremo 2A	0.71	-1.138	0.201	0.2552	0.0047	1.162
891	1	Extremo 2A	0.71	6.502	0.201	0.2552	-0.0957	-0.179
892	0	Extremo 1A	1.45	-8.25	0.191	0.0919	0.0979	-0.736
892	0.5	Extremo 1A	1.45	-0.609	0.191	0.0919	0.0023	1.4786
892	1	Extremo 1A	1.45	7.032	0.191	0.0919	-0.0934	-0.1271
892	0	Extremo 2A	1.45	-8.25	0.191	0.0919	0.0979	-0.736
892	0.5	Extremo 2A	1.45	-0.609	0.191	0.0919	0.0023	1.4786
892	1	Extremo 2A	1.45	7.032	0.191	0.0919	-0.0934	-0.1271
893	0	Extremo 1A	2.145	-7.891	0.162	0.0311	0.082	-0.3106
893	0.5	Extremo 1A	2.145	-0.251	0.162	0.0311	0.00074	1.7249
893	1	Extremo 1A	2.145	7.39	0.162	0.0311	-0.0805	-0.0599
893	0	Extremo 2A	2.145	-7.891	0.162	0.0311	0.082	-0.3106
893	0.5	Extremo 2A	2.145	-0.251	0.162	0.0311	0.00074	1.7249
893	1	Extremo 2A	2.145	7.39	0.162	0.0311	-0.0805	-0.0599
894	0	Extremo 1A	2.737	-7.557	0.131	0.0266	0.0653	-0.1449
894	0.5	Extremo 1A	2.737	0.083	0.131	0.0266	-0.00028	1.7235
894	1	Extremo 1A	2.737	7.724	0.131	0.0266	-0.0659	-0.2284
894	0	Extremo 2A	2.737	-7.557	0.131	0.0266	0.0653	-0.1449
894	0.5	Extremo 2A	2.737	0.083	0.131	0.0266	-0.00028	1.7235
894	1	Extremo 2A	2.737	7.724	0.131	0.0266	-0.0659	-0.2284
895	0	Extremo 1A	3.22	-7.253	0.103	0.053	0.0505	-0.3214
895	0.5	Extremo 1A	3.22	0.388	0.103	0.053	-0.0011	1.3949
895	1	Extremo 1A	3.22	8.028	0.103	0.053	-0.0527	-0.709
895	0	Extremo 2A	3.22	-7.253	0.103	0.053	0.0505	-0.3214
895	0.5	Extremo 2A	3.22	0.388	0.103	0.053	-0.0011	1.3949
895	1	Extremo 2A	3.22	8.028	0.103	0.053	-0.0527	-0.709
896	0	Extremo 1A	3.605	-7.059	0.08	0.1163	0.0383	-0.9182
896	0.5	Extremo 1A	3.605	0.582	0.08	0.1163	-0.0017	0.701
896	1	Extremo 1A	3.605	8.222	0.08	0.1163	-0.0417	-1.5001
896	0	Extremo 2A	3.605	-7.059	0.08	0.1163	0.0383	-0.9182
896	0.5	Extremo 2A	3.605	0.582	0.08	0.1163	-0.0017	0.701
896	1	Extremo 2A	3.605	8.222	0.08	0.1163	-0.0417	-1.5001
897	0	Extremo 1A	3.907	-7.09	0.061	0.2099	0.0284	-2.0013
897	0.5	Extremo 1A	3.907	0.55	0.061	0.2099	-0.0022	-0.3663
897	1	Extremo 1A	3.907	8.191	0.061	0.2099	-0.0329	-2.5517
897	0	Extremo 2A	3.907	-7.09	0.061	0.2099	0.0284	-2.0013
897	0.5	Extremo 2A	3.907	0.55	0.061	0.2099	-0.0022	-0.3663
897	1	Extremo 2A	3.907	8.191	0.061	0.2099	-0.0329	-2.5517
898	0	Extremo 1A	4.14	-7.412	0.047	0.2548	0.0206	-3.444
898	0.5	Extremo 1A	4.14	0.229	0.047	0.2548	-0.0027	-1.6482
898	1	Extremo 1A	4.14	7.869	0.047	0.2548	-0.026	-3.6726
898	0	Extremo 2A	4.14	-7.412	0.047	0.2548	0.0206	-3.444
898	0.5	Extremo 2A	4.14	0.229	0.047	0.2548	-0.0027	-1.6482
898	1	Extremo 2A	4.14	7.869	0.047	0.2548	-0.026	-3.6726
899	0	Extremo 1A	4.319	-7.83	0.035	0.1326	0.0146	-4.5954
899	0.5	Extremo 1A	4.319	-0.189	0.035	0.1326	-0.003	-2.5906
899	1	Extremo 1A	4.319	7.451	0.035	0.1326	-0.0207	-4.4061
899	0	Extremo 2A	4.319	-7.83	0.035	0.1326	0.0146	-4.5954
899	0.5	Extremo 2A	4.319	-0.189	0.035	0.1326	-0.003	-2.5906
899	1	Extremo 2A	4.319	7.451	0.035	0.1326	-0.0207	-4.4061
900	0	Extremo 1A	4.454	-8.077	0.027	-0.0594	0.01	-4.5702
900	0.5	Extremo 1A	4.454	-0.437	0.027	-0.0594	-0.0033	-2.4417
900	1	Extremo 1A	4.454	7.204	0.027	-0.0594	-0.0166	-4.1334
900	0	Extremo 2A	4.454	-8.077	0.027	-0.0594	0.01	-4.5702
900	0.5	Extremo 2A	4.454	-0.437	0.027	-0.0594	-0.0033	-2.4416
900	1	Extremo 2A	4.454	7.204	0.027	-0.0594	-0.0166	-4.1334
901	0	Extremo 1A	4.557	-8.497	0.02	-0.1814	0.0065	-3.5396
901	0.5	Extremo 1A	4.557	-0.857	0.02	-0.1814	-0.0035	-1.2012
901	1	Extremo 1A	4.557	6.784	0.02	-0.1814	-0.0135	-2.6831
901	0	Extremo 2A	4.557	-8.497	0.02	-0.1814	0.0065	-3.5396
901	0.5	Extremo 2A	4.557	-0.857	0.02	-0.1814	-0.0035	-1.2012
901	1	Extremo 2A	4.557	6.784	0.02	-0.1814	-0.0135	-2.6831
902	0	Extremo 1A	4.635	-8.822	0.015	-0.1367	0.0039	-2.1211
902	0.5	Extremo 1A	4.635	-1.181	0.015	-0.1367	-0.0037	0.3796
902	1	Extremo 1A	4.635	6.46	0.015	-0.1367	-0.0112	-0.94
902	0	Extremo 2A	4.635	-8.822	0.015	-0.1367	0.0039	-2.1211
902	0.5	Extremo 2A	4.635	-1.181	0.015	-0.1367	-0.0037	0.3796
902	1	Extremo 2A	4.635	6.46	0.015	-0.1367	-0.0112	-0.94
903	0	Extremo 1A	4.693	-8.854	0.011	-0.0451	0.0019	-0.768
903	0.5	Extremo 1A	4.693	-1.214	0.011	-0.0451	-0.0038	1.7491
903	1	Extremo 1A	4.693	6.427	0.011	-0.0451	-0.0095	0.4458
903	0	Extremo 2A	4.693	-8.854	0.011	-0.0451	0.0019	-0.768
903	0.5	Extremo 2A	4.693	-1.214	0.011	-0.0451	-0.0038	1.7491
903	1	Extremo 2A	4.693	6.427	0.011	-0.0451	-0.0095	0.4458
904	0	Extremo 1A	4.737	-8.654	0.00855	0.0121	0.00039	0.3367
904	0.5	Extremo 1A	4.737	-1.014	0.00855	0.0121	-0.0039	2.7538
904	1	Extremo 1A	4.737	6.627	0.00855	0.0121	-0.0082	1.3505
904	0	Extremo 2A	4.737	-8.654	0.00855	0.0121	0.00039	0.3367
904	0.5	Extremo 2A	4.737	-1.014	0.00855	0.0121	-0.0039	2.7538
904	1	Extremo 2A	4.737	6.627	0.00855	0.0121	-0.0082	1.3505
905	0	Extremo 1A	4.77	-8.326	0.00644	0.0273	-0.00074	1.1575
905	0.5	Extremo 1A	4.77	-0.686	0.00644	0.0273	-0.004	3.4104
905	1	Extremo 1A	4.77	6.955	0.00644	0.0273	-0.0072	1.843
905	0	Extremo 2A	4.77	-8.326	0.00644	0.0273	-0.00074	1.1575
905	0.5	Extremo 2A	4.77	-0.686	0.00644	0.0273	-0.004	3.4104
905	1	Extremo 2A	4.77	6.955	0.00644	0.0273	-0.0072	1.843
906	0	Extremo 1A	4.795	-7.939	0.00485	0.0171	-0.0016	1.6964
906	0.5	Extremo 1A	4.795	-0.299	0.00485	0.0171	-0.004	3.7559
906	1	Extremo 1A	4.795	7.342	0.00485	0.0171	-0.0064	1.9952
906	0	Extremo 2A	4.795	-7.939	0.00485	0.0171	-0.0016	1.6964
906	0.5	Extremo 2A	4.795	-0.299	0.00485	0.0171	-0.004	3.7559
906	1	Extremo 2A	4.795	7.342	0.00485	0.0171	-0.0064	1.9952
907	0	Extremo 1A	4.813	-7.532	0.00366	-0.0033	-0.0022	1.9552
907	0.5	Extremo 1A	4.813	0.109	0.00366	-0.0033	-0.004	3.811
907	1	Extremo 1A	4.813	7.749	0.00366	-0.0033	-0.0059	1.8465
907	0	Extremo 2A	4.813	-7.532	0.00366	-0.0033	-0.0022	1.9552
907	0.5	Extremo 2A	4.813	0.109	0.00366	-0.0033	-0.004	3.811
907	1	Extremo 2A	4.813	7.749	0.00366	-0.0033	-0.0059	1.8465
908	0	Extremo 1A	4.827	-7.126	0.00277	-0.0227	-0.0027	1.9279
908	0.5	Extremo 1A	4.827	0.514	0.00277	-0.0227	-0.0041	3.5809
908	1	Extremo 1A	4.827	8.155	0.00277	-0.0227	-0.0055	1.4137
908	0	Extremo 2A	4.827	-7.126	0.00277	-0.0227	-0.0027	1.9279
908	0.5	Extremo 2A	4.827	0.514	0.00277	-0.0227	-0.0041	3.5809
908	1	Extremo 2A	4.827	8.155	0.00277	-0.0227	-0.0055	1.4137
909	0	Extremo 1A	4.838	-6.747	0.00209	-0.0292	-0.003	1.5946
909	0.5	Extremo 1A	4.838	0.893	0.00209	-0.0292	-0.0041	3.058
909	1	Extremo 1A	4.838	8.534	0.00209	-0.0292	-0.0051	0.7012
909	0	Extremo 2A	4.838	-6.747	0.00209	-0.0292	-0.003	1.5946

909	0.5	Extremo 2A	4.838	0.893	0.00209	-0.0292	-0.0041	3.058
909	1	Extremo 2A	4.838	8.534	0.00209	-0.0292	-0.0051	0.7012
910	0	Extremo 1A	4.846	-6.438	0.00159	-0.0056	-0.0033	0.9089
910	0.5	Extremo 1A	4.846	1.203	0.00159	-0.0056	-0.0041	2.2175
910	1	Extremo 1A	4.846	8.844	0.00159	-0.0056	-0.0049	-0.2942
910	0	Extremo 2A	4.846	-6.438	0.00159	-0.0056	-0.0033	0.9089
910	0.5	Extremo 2A	4.846	1.203	0.00159	-0.0056	-0.0041	2.2175
910	1	Extremo 2A	4.846	8.844	0.00159	-0.0056	-0.0049	-0.2942
911	0	Extremo 1A	4.852	-6.279	0.0012	0.0674	-0.0035	-0.2132
911	0.5	Extremo 1A	4.852	1.362	0.0012	0.0674	-0.0041	1.0159
911	1	Extremo 1A	4.852	9.003	0.0012	0.0674	-0.0047	-1.5753
911	0	Extremo 2A	4.852	-6.279	0.0012	0.0674	-0.0035	-0.2132
911	0.5	Extremo 2A	4.852	1.362	0.0012	0.0674	-0.0041	1.0159
911	1	Extremo 2A	4.852	9.003	0.0012	0.0674	-0.0047	-1.5753
912	0	Extremo 1A	4.857	-6.392	0.00091	0.1809	-0.0037	-1.8524
912	0.5	Extremo 1A	4.857	1.248	0.00091	0.1809	-0.0041	-0.5665
912	1	Extremo 1A	4.857	8.889	0.00091	0.1809	-0.0046	-3.1009
912	0	Extremo 2A	4.857	-6.392	0.00091	0.1809	-0.0037	-1.8524
912	0.5	Extremo 2A	4.857	1.248	0.00091	0.1809	-0.0041	-0.5665
912	1	Extremo 2A	4.857	8.889	0.00091	0.1809	-0.0046	-3.1009
913	0	Extremo 1A	4.86	-6.847	0.00069	0.2402	-0.0038	-3.8648
913	0.5	Extremo 1A	4.86	0.794	0.00069	0.2402	-0.0041	-2.3514
913	1	Extremo 1A	4.86	8.434	0.00069	0.2402	-0.0045	-4.6583
913	0	Extremo 2A	4.86	-6.847	0.00069	0.2402	-0.0038	-3.8648
913	0.5	Extremo 2A	4.86	0.794	0.00069	0.2402	-0.0041	-2.3514
913	1	Extremo 2A	4.86	8.434	0.00069	0.2402	-0.0045	-4.6583
914	0	Extremo 1A	4.863	-7.414	0.00053	0.1059	-0.0039	-5.4939
914	0.5	Extremo 1A	4.863	0.226	0.00053	0.1059	-0.0041	-3.6969
914	1	Extremo 1A	4.863	7.867	0.00053	0.1059	-0.0044	-5.7201
914	0	Extremo 2A	4.863	-7.414	0.00053	0.1059	-0.0039	-5.4939
914	0.5	Extremo 2A	4.863	0.226	0.00053	0.1059	-0.0041	-3.6969
914	1	Extremo 2A	4.863	7.867	0.00053	0.1059	-0.0044	-5.7201
915	0	Extremo 1A	4.865	-7.783	0.0004	-0.1097	-0.0039	-5.7098
915	0.5	Extremo 1A	4.865	-0.142	0.0004	-0.1097	-0.0041	-3.7286
915	1	Extremo 1A	4.865	7.498	0.0004	-0.1097	-0.0043	-5.5676
915	0	Extremo 2A	4.865	-7.783	0.0004	-0.1097	-0.0039	-5.7098
915	0.5	Extremo 2A	4.865	-0.142	0.0004	-0.1097	-0.0041	-3.7286
915	1	Extremo 2A	4.865	7.498	0.0004	-0.1097	-0.0043	-5.5676
916	0	Extremo 1A	4.866	-8.35	0.00031	-0.244	-0.004	-4.7115
916	0.5	Extremo 1A	4.866	-0.71	0.00031	-0.244	-0.0042	-2.4466
916	1	Extremo 1A	4.866	6.931	0.00031	-0.244	-0.0043	-4.0019
916	0	Extremo 2A	4.866	-8.35	0.00031	-0.244	-0.004	-4.7115
916	0.5	Extremo 2A	4.866	-0.71	0.00031	-0.244	-0.0042	-2.4466
916	1	Extremo 2A	4.866	6.931	0.00031	-0.244	-0.0043	-4.0019
917	0	Extremo 1A	4.868	-8.805	0.00023	-0.1847	-0.004	-3.2175
917	0.5	Extremo 1A	4.868	-1.164	0.00023	-0.1847	-0.0042	-0.7251
917	1	Extremo 1A	4.868	6.476	0.00023	-0.1847	-0.0043	-2.053
917	0	Extremo 2A	4.868	-8.805	0.00023	-0.1847	-0.004	-3.2175
917	0.5	Extremo 2A	4.868	-1.164	0.00023	-0.1847	-0.0042	-0.7251
917	1	Extremo 2A	4.868	6.476	0.00023	-0.1847	-0.0043	-2.053
918	0	Extremo 1A	4.868	-8.919	0.00018	-0.0712	-0.0041	-1.7554
918	0.5	Extremo 1A	4.868	-1.278	0.00018	-0.0712	-0.0042	0.7938
918	1	Extremo 1A	4.868	6.363	0.00018	-0.0712	-0.0042	-0.4773
918	0	Extremo 2A	4.868	-8.919	0.00018	-0.0712	-0.0041	-1.7554
918	0.5	Extremo 2A	4.868	-1.278	0.00018	-0.0712	-0.0042	0.7938
918	1	Extremo 2A	4.868	6.363	0.00018	-0.0712	-0.0042	-0.4773
919	0	Extremo 1A	4.869	-8.76	0.00014	0.0018	-0.0041	-0.5378
919	0.5	Extremo 1A	4.869	-1.119	0.00014	0.0018	-0.0042	1.9319
919	1	Extremo 1A	4.869	6.521	0.00014	0.0018	-0.0042	0.5813
919	0	Extremo 2A	4.869	-8.76	0.00014	0.0018	-0.0041	-0.5378
919	0.5	Extremo 2A	4.869	-1.119	0.00014	0.0018	-0.0042	1.9319
919	1	Extremo 2A	4.869	6.521	0.00014	0.0018	-0.0042	0.5813
920	0	Extremo 1A	4.87	-8.45	0.00011	0.0256	-0.0041	0.3938
920	0.5	Extremo 1A	4.87	-0.81	0.00011	0.0256	-0.0042	2.7088
920	1	Extremo 1A	4.87	6.831	0.00011	0.0256	-0.0042	1.2034
920	0	Extremo 2A	4.87	-8.45	0.00011	0.0256	-0.0041	0.3938
920	0.5	Extremo 2A	4.87	-0.81	0.00011	0.0256	-0.0042	2.7088
920	1	Extremo 2A	4.87	6.831	0.00011	0.0256	-0.0042	1.2034
921	0	Extremo 1A	4.87	-8.072	8.1E-05	0.0193	-0.0041	1.0422
921	0.5	Extremo 1A	4.87	-0.431	8.1E-05	0.0193	-0.0042	3.1679
921	1	Extremo 1A	4.87	7.21	8.1E-05	0.0193	-0.0042	1.4732
921	0	Extremo 2A	4.87	-8.072	8.1E-05	0.0193	-0.0041	1.0422
921	0.5	Extremo 2A	4.87	-0.431	8.1E-05	0.0193	-0.0042	3.1679
921	1	Extremo 2A	4.87	7.21	8.1E-05	0.0193	-0.0042	1.4732
922	0	Extremo 1A	4.87	-7.667	6.2E-05	0.00056	-0.0041	1.4101
922	0.5	Extremo 1A	4.87	-0.027	6.2E-05	0.00056	-0.0042	3.3337
922	1	Extremo 1A	4.87	7.614	6.2E-05	0.00056	-0.0042	1.4369
922	0	Extremo 2A	4.87	-7.667	6.2E-05	0.00056	-0.0041	1.4101
922	0.5	Extremo 2A	4.87	-0.027	6.2E-05	0.00056	-0.0042	3.3337
922	1	Extremo 2A	4.87	7.614	6.2E-05	0.00056	-0.0042	1.4369
923	0	Extremo 1A	4.871	-7.263	4.8E-05	-0.0183	-0.0041	1.4919
923	0.5	Extremo 1A	4.871	0.378	4.8E-05	-0.0183	-0.0042	3.2133
923	1	Extremo 1A	4.871	8.018	4.8E-05	-0.0183	-0.0042	1.1143
923	0	Extremo 2A	4.871	-7.263	4.8E-05	-0.0183	-0.0041	1.4919
923	0.5	Extremo 2A	4.871	0.378	4.8E-05	-0.0183	-0.0042	3.2133
923	1	Extremo 2A	4.871	8.018	4.8E-05	-0.0183	-0.0042	1.1143
924	0	Extremo 1A	4.871	-6.884	3.7E-05	-0.0251	-0.0041	1.2683
924	0.5	Extremo 1A	4.871	0.757	3.7E-05	-0.0251	-0.0042	2.7999
924	1	Extremo 1A	4.871	8.398	3.7E-05	-0.0251	-0.0042	0.5112
924	0	Extremo 2A	4.871	-6.884	3.7E-05	-0.0251	-0.0041	1.2683
924	0.5	Extremo 2A	4.871	0.757	3.7E-05	-0.0251	-0.0042	2.7999
924	1	Extremo 2A	4.871	8.398	3.7E-05	-0.0251	-0.0042	0.5112
925	0	Extremo 1A	4.871	-6.571	2.8E-05	-0.0027	-0.0041	0.6943
925	0.5	Extremo 1A	4.871	1.069	2.8E-05	-0.0027	-0.0042	2.0699
925	1	Extremo 1A	4.871	8.71	2.8E-05	-0.0027	-0.0042	-0.3749
925	0	Extremo 2A	4.871	-6.571	2.8E-05	-0.0027	-0.0041	0.6943
925	0.5	Extremo 2A	4.871	1.069	2.8E-05	-0.0027	-0.0042	2.0699
925	1	Extremo 2A	4.871	8.71	2.8E-05	-0.0027	-0.0042	-0.3749
926	0	Extremo 1A	4.871	-6.406	2.2E-05	0.0676	-0.0041	-0.3119
926	0.5	Extremo 1A	4.871	1.235	2.2E-05	0.0676	-0.0042	0.9809
926	1	Extremo 1A	4.871	8.875	2.2E-05	0.0676	-0.0042	-1.5466
926	0	Extremo 2A	4.871	-6.406	2.2E-05	0.0676	-0.0041	-0.3118
926	0.5	Extremo 2A	4.871	1.235	2.2E-05	0.0676	-0.0042	0.9809
926	1	Extremo 2A	4.871	8.875	2.2E-05	0.0676	-0.0042	-1.5466
927	0	Extremo 1A	4.871	-6.505	1.7E-05	0.1773	-0.0042	-1.8286
927	0.5	Extremo 1A	4.871	1.135	1.7E-05	0.1773	-0.0042	-0.4861
927	1	Extremo 1A	4.871	8.776	1.7E-05	0.1773	-0.0042	-2.964
927	0	Extremo 2A	4.871	-6.505	1.7E-05	0.1773	-0.0042	-1.8285
927	0.5	Extremo 2A	4.871	1.135	1.7E-05	0.1773	-0.0042	-0.4861
927	1	Extremo 2A	4.871	8.776	1.7E-05	0.1773	-0.0042	-2.964
928	0	Extremo 1A	4.871	-6.936	1.3E-05	0.2348	-0.0042	-3.7164
928	0.5	Extremo 1A	4.871	0.705	1.3E-05	0.2348	-0.0042	-2.1585
928	1	Extremo 1A	4.871	8.345	1.3E-05	0.2348	-0.0042	-4.421
928	0	Extremo 2A	4.871	-6.936	1.3E-05	0.2348	-0.0042	-3.7164
928	0.5	Extremo 2A	4.871	0.705	1.3E-05	0.2348	-0.0042	-2.1585
928	1	Extremo 2A	4.871	8.345	1.3E-05	0.2348	-0.0042	-4.4209
929	0	Extremo 1A	4.871	-7.476	1E-05	0.1046	-0.0042	-5.2423
929	0.5	Extremo 1A	4.871	0.164	1E-05	0.1046	-0.0042	-3.4142
929	1	Extremo 1A	4.871	7.805	1E-05	0.1046	-0.0042	-5.4064
929	0	Extremo 2A	4.871	-7.476	1E-05	0.1046	-0.0042	-5.2422
929	0.5	Extremo 2A	4.871	0.164	1E-05	0.1046	-0.0042	-3.4142
929	1	Extremo 2A	4.871	7.805	1E-05	0.1046	-0.0042	-5.4064
930	0	Extremo 1A	4.871	-7.824	7.7E-06	-0.1042	-0.0042	-5.4078
930	0.5	Extremo 1A	4.871	-0.184	7.7E-06	-0.1042	-0.0042	-3.4058
930	1	Extremo 1A	4.871	7.457	7.7E-06	-0.1042	-0.0042	-5.2242
930	0	Extremo 2A	4.871	-7.824	7.7E-06	-0.1042	-0.0042	-5.4078
930	0.5	Extremo 2A	4.871	-0.184	7.7E-06	-0.1042	-0.0042	-3.4058
930	1	Extremo 2A	4.871	7.457	7.7E-06	-0.1042	-0.0042	-5.2242
931	0	Extremo 1A	4.871	-8.365	6E-06	-0.2344	-0.0042	-4.4057
931	0.5	Extremo 1A	4.871	-0.724	6E-06	-0.2344	-0.0042	-2.1335
931	1	Extremo 1A	4.871	6.917	6E-06	-0.2344	-0.0042	-3.6816
931	0	Extremo 2A	4.871	-8.365	6E-06	-0.2344	-0.0042	-4.4056
931	0.5	Extremo 2A	4.871	-0.724	6E-06	-0.2344	-0.0042	-2.1335
931	1	Extremo 2A	4.871	6.917	6E-06	-0.2344	-0.0042	-3.6816
932	0	Extremo 1A	4.871	-8.796	4.6E-06	-0.177	-0.0042	-2.932
932	0.5	Extremo 1A	4.871	-1.155	4.6E-06	-0.177	-0.0042	-0.4444
932	1	Extremo 1A	4.871	6.486	4.6E-06	-0.177	-0.0042	-1.777
932	0	Extremo 2A	4.871	-8.796	4.6E-06	-0.177	-0.0042	-2.932
932	0.5	Extremo 2A	4.871	-1.155	4.6E-06	-0.177	-0.0042	-0.4443
932	1	Extremo 2A	4.871	6.486	4.6E-06	-0.177	-0.0042	-1.777
933	0	Extremo 1A	4.871	-8.895	3.6E-06	-0.0672	-0.0042	-1.4979
933	0.5	Extremo 1A	4.871	-1.254	3.6E-06	-0.0672	-0.0042	1.0394
933	1	Extremo 1A	4.871	6.386	3.6E-06	-0.0672	-0.0042	-0.2436
933	0	Extremo 2A	4.871	-8.895	3.6E-06	-0.0672	-0.0042	-1.4979

933	0.5	Extremo 2A	4.871	-1.254	3.6E-06	-0.0672	-0.0042	1.0394
933	1	Extremo 2A	4.871	6.386	3.6E-06	-0.0672	-0.0042	-0.2436
934	0	Extremo 1A	4.871	-8.729	2.8E-06	0.0031	-0.0042	-0.3095
934	0.5	Extremo 1A	4.871	-1.089	2.8E-06	0.0031	-0.0042	2.145
934	1	Extremo 1A	4.871	6.552	2.8E-06	0.0031	-0.0042	0.7793
934	0	Extremo 2A	4.871	-8.729	2.8E-06	0.0031	-0.0042	-0.3095
934	0.5	Extremo 2A	4.871	-1.089	2.8E-06	0.0031	-0.0042	2.145
934	1	Extremo 2A	4.871	6.552	2.8E-06	0.0031	-0.0042	0.7792
935	0	Extremo 1A	4.871	-8.417	2.2E-06	0.0255	-0.0042	0.5932
935	0.5	Extremo 1A	4.871	-0.777	2.2E-06	0.0255	-0.0042	2.8918
935	1	Extremo 1A	4.871	6.864	2.2E-06	0.0255	-0.0042	1.37
935	0	Extremo 2A	4.871	-8.417	2.2E-06	0.0255	-0.0042	0.5932
935	0.5	Extremo 2A	4.871	-0.777	2.2E-06	0.0255	-0.0042	2.8917
935	1	Extremo 2A	4.871	6.864	2.2E-06	0.0255	-0.0042	1.37
936	0	Extremo 1A	4.871	-8.038	1.7E-06	0.0188	-0.0042	1.2129
936	0.5	Extremo 1A	4.871	-0.397	1.7E-06	0.0188	-0.0042	3.3218
936	1	Extremo 1A	4.871	7.243	1.7E-06	0.0188	-0.0042	1.6103
936	0	Extremo 2A	4.871	-8.038	1.7E-06	0.0188	-0.0042	1.2129
936	0.5	Extremo 2A	4.871	-0.397	1.7E-06	0.0188	-0.0042	3.3218
936	1	Extremo 2A	4.871	7.243	1.7E-06	0.0188	-0.0042	1.6103
937	0	Extremo 1A	4.871	-7.634	1.3E-06	-0.00013	-0.0042	1.5522
937	0.5	Extremo 1A	4.871	0.00697	1.3E-06	-0.00013	-0.0042	3.4589
937	1	Extremo 1A	4.871	7.648	1.3E-06	-0.00013	-0.0042	1.5453
937	0	Extremo 2A	4.871	-7.634	1.3E-06	-0.00013	-0.0042	1.5522
937	0.5	Extremo 2A	4.871	0.00697	1.3E-06	-0.00013	-0.0042	3.4589
937	1	Extremo 2A	4.871	7.648	1.3E-06	-0.00013	-0.0042	1.5452
938	0	Extremo 1A	4.871	-7.229	1E-06	-0.019	-0.0042	1.6054
938	0.5	Extremo 1A	4.871	0.411	1E-06	-0.019	-0.0042	3.3099
938	1	Extremo 1A	4.871	8.052	1E-06	-0.019	-0.0042	1.1941
938	0	Extremo 2A	4.871	-7.229	1E-06	-0.019	-0.0042	1.6054
938	0.5	Extremo 2A	4.871	0.411	1E-06	-0.019	-0.0042	3.3099
938	1	Extremo 2A	4.871	8.052	1E-06	-0.019	-0.0042	1.194
939	0	Extremo 1A	4.871	-6.85	7.8E-07	-0.0256	-0.0042	1.3529
939	0.5	Extremo 1A	4.871	0.79	7.8E-07	-0.0256	-0.0042	2.8679
939	1	Extremo 1A	4.871	8.431	7.8E-07	-0.0256	-0.0042	0.5625
939	0	Extremo 2A	4.871	-6.85	7.8E-07	-0.0256	-0.0042	1.3529
939	0.5	Extremo 2A	4.871	0.79	7.8E-07	-0.0256	-0.0042	2.8678
939	1	Extremo 2A	4.871	8.431	7.8E-07	-0.0256	-0.0042	0.5624
940	0	Extremo 1A	4.871	-6.539	6.1E-07	-0.0029	-0.0042	0.7497
940	0.5	Extremo 1A	4.871	1.102	6.1E-07	-0.0029	-0.0042	2.1089
940	1	Extremo 1A	4.871	8.743	6.1E-07	-0.0029	-0.0042	-0.3522
940	0	Extremo 2A	4.871	-6.539	6.1E-07	-0.0029	-0.0042	0.7496
940	0.5	Extremo 2A	4.871	1.102	6.1E-07	-0.0029	-0.0042	2.1088
940	1	Extremo 2A	4.871	8.743	6.1E-07	-0.0029	-0.0042	-0.3523
941	0	Extremo 1A	4.871	-6.375	4.7E-07	0.068	-0.0042	-0.2868
941	0.5	Extremo 1A	4.871	1.266	4.7E-07	0.068	-0.0042	0.9904
941	1	Extremo 1A	4.871	8.906	4.7E-07	0.068	-0.0042	-1.5527
941	0	Extremo 2A	4.871	-6.375	4.7E-07	0.068	-0.0042	-0.2869
941	0.5	Extremo 2A	4.871	1.266	4.7E-07	0.068	-0.0042	0.9904
941	1	Extremo 2A	4.871	8.906	4.7E-07	0.068	-0.0042	-1.5527
942	0	Extremo 1A	4.871	-6.478	3.7E-07	0.1787	-0.0042	-1.8355
942	0.5	Extremo 1A	4.871	1.163	3.7E-07	0.1787	-0.0042	-0.5068
942	1	Extremo 1A	4.871	8.804	3.7E-07	0.1787	-0.0042	-2.9985
942	0	Extremo 2A	4.871	-6.478	3.7E-07	0.1787	-0.0042	-1.8356
942	0.5	Extremo 2A	4.871	1.163	3.7E-07	0.1787	-0.0042	-0.5069
942	1	Extremo 2A	4.871	8.804	3.7E-07	0.1787	-0.0042	-2.9985
943	0	Extremo 1A	4.871	-6.915	2.9E-07	0.2366	-0.0042	-3.7558
943	0.5	Extremo 1A	4.871	0.726	2.9E-07	0.2366	-0.0042	-2.2087
943	1	Extremo 1A	4.871	8.367	2.9E-07	0.2366	-0.0042	-4.4819
943	0	Extremo 2A	4.871	-6.915	2.9E-07	0.2366	-0.0042	-3.7558
943	0.5	Extremo 2A	4.871	0.726	2.9E-07	0.2366	-0.0042	-2.2087
943	1	Extremo 2A	4.871	8.367	2.9E-07	0.2366	-0.0042	-4.4819
944	0	Extremo 1A	4.871	-7.462	2.2E-07	0.1053	-0.0042	-5.3085
944	0.5	Extremo 1A	4.871	0.179	2.2E-07	0.1053	-0.0042	-3.4878
944	1	Extremo 1A	4.871	7.82	2.2E-07	0.1053	-0.0042	-5.4874
944	0	Extremo 2A	4.871	-7.462	2.2E-07	0.1053	-0.0042	-5.3086
944	0.5	Extremo 2A	4.871	0.179	2.2E-07	0.1053	-0.0042	-3.4879
944	1	Extremo 2A	4.871	7.82	2.2E-07	0.1053	-0.0042	-5.4875
945	0	Extremo 1A	4.871	-7.815	1.7E-07	-0.1054	-0.0042	-5.4871
945	0.5	Extremo 1A	4.871	-0.174	1.7E-07	-0.1054	-0.0042	-3.49
945	1	Extremo 1A	4.871	7.467	1.7E-07	-0.1054	-0.0042	-5.3132
945	0	Extremo 2A	4.871	-7.815	1.7E-07	-0.1054	-0.0042	-5.4872
945	0.5	Extremo 2A	4.871	-0.174	1.7E-07	-0.1054	-0.0042	-3.4901
945	1	Extremo 2A	4.871	7.467	1.7E-07	-0.1054	-0.0042	-5.3133
946	0	Extremo 1A	4.871	-8.362	1.4E-07	-0.2367	-0.0042	-4.486
946	0.5	Extremo 1A	4.871	-0.721	1.4E-07	-0.2367	-0.0042	-2.2153
946	1	Extremo 1A	4.871	6.92	1.4E-07	-0.2367	-0.0042	-3.7649
946	0	Extremo 2A	4.871	-8.362	1.4E-07	-0.2367	-0.0042	-4.486
946	0.5	Extremo 2A	4.871	-0.721	1.4E-07	-0.2367	-0.0042	-2.2153
946	1	Extremo 2A	4.871	6.92	1.4E-07	-0.2367	-0.0042	-3.765
947	0	Extremo 1A	4.871	-8.799	1.1E-07	-0.1788	-0.0042	-3.007
947	0.5	Extremo 1A	4.871	-1.158	1.1E-07	-0.1788	-0.0042	-0.5179
947	1	Extremo 1A	4.871	6.483	1.1E-07	-0.1788	-0.0042	-1.8491
947	0	Extremo 2A	4.871	-8.799	1.1E-07	-0.1788	-0.0042	-3.007
947	0.5	Extremo 2A	4.871	-1.158	1.1E-07	-0.1788	-0.0042	-0.5179
947	1	Extremo 2A	4.871	6.483	1.1E-07	-0.1788	-0.0042	-1.8491
948	0	Extremo 1A	4.871	-8.901	8.3E-08	-0.0681	-0.0042	-1.5656
948	0.5	Extremo 1A	4.871	-1.261	8.3E-08	-0.0681	-0.0042	0.9749
948	1	Extremo 1A	4.871	6.38	8.3E-08	-0.0681	-0.0042	-0.3048
948	0	Extremo 2A	4.871	-8.901	8.3E-08	-0.0681	-0.0042	-1.5656
948	0.5	Extremo 2A	4.871	-1.261	8.3E-08	-0.0681	-0.0042	0.9749
948	1	Extremo 2A	4.871	6.38	8.3E-08	-0.0681	-0.0042	-0.3048
949	0	Extremo 1A	4.871	-8.737	6.5E-08	0.0028	-0.0042	-0.3696
949	0.5	Extremo 1A	4.871	-1.097	6.5E-08	0.0028	-0.0042	2.089
949	1	Extremo 1A	4.871	6.544	6.5E-08	0.0028	-0.0042	0.7272
949	0	Extremo 2A	4.871	-8.737	6.5E-08	0.0028	-0.0042	-0.3696
949	0.5	Extremo 2A	4.871	-1.097	6.5E-08	0.0028	-0.0042	2.089
949	1	Extremo 2A	4.871	6.544	6.5E-08	0.0028	-0.0042	0.7273
950	0	Extremo 1A	4.871	-8.426	5.1E-08	0.0256	-0.0042	0.5407
950	0.5	Extremo 1A	4.871	-0.785	5.1E-08	0.0256	-0.0042	2.8435
950	1	Extremo 1A	4.871	6.855	5.1E-08	0.0256	-0.0042	1.3261
950	0	Extremo 2A	4.871	-8.426	5.1E-08	0.0256	-0.0042	0.5407
950	0.5	Extremo 2A	4.871	-0.785	5.1E-08	0.0256	-0.0042	2.8436
950	1	Extremo 2A	4.871	6.855	5.1E-08	0.0256	-0.0042	1.3261
951	0	Extremo 1A	4.871	-8.047	4E-08	0.0189	-0.0042	1.1679
951	0.5	Extremo 1A	4.871	-0.406	4E-08	0.0189	-0.0042	3.2812
951	1	Extremo 1A	4.871	7.234	4E-08	0.0189	-0.0042	1.5741
951	0	Extremo 2A	4.871	-8.047	4E-08	0.0189	-0.0042	1.168
951	0.5	Extremo 2A	4.871	-0.406	4E-08	0.0189	-0.0042	3.2812
951	1	Extremo 2A	4.871	7.234	4E-08	0.0189	-0.0042	1.5742
952	0	Extremo 1A	4.871	-7.642	3.1E-08	3.4E-05	-0.0042	1.5147
952	0.5	Extremo 1A	4.871	-0.00179	3.1E-08	3.4E-05	-0.0042	3.4258
952	1	Extremo 1A	4.871	7.639	3.1E-08	3.4E-05	-0.0042	1.5165
952	0	Extremo 2A	4.871	-7.642	3.1E-08	3.5E-05	-0.0042	1.5148
952	0.5	Extremo 2A	4.871	-0.00182	3.1E-08	3.5E-05	-0.0042	3.4259
952	1	Extremo 2A	4.871	7.639	3.1E-08	3.5E-05	-0.0042	1.5166
953	0	Extremo 1A	4.871	-7.238	2.4E-08	-0.0188	-0.0042	1.5754
953	0.5	Extremo 1A	4.871	0.403	2.4E-08	-0.0188	-0.0042	3.2842
953	1	Extremo 1A	4.871	8.043	2.4E-08	-0.0188	-0.0042	1.1728
953	0	Extremo 2A	4.871	-7.238	2.4E-08	-0.0188	-0.0042	1.5755
953	0.5	Extremo 2A	4.871	0.403	2.4E-08	-0.0188	-0.0042	3.2844
953	1	Extremo 2A	4.871	8.043	2.4E-08	-0.0188	-0.0042	1.1729
954	0	Extremo 1A	4.871	-6.859	1.9E-08	-0.0255	-0.0042	1.3305
954	0.5	Extremo 1A	4.871	0.782	1.9E-08	-0.0255	-0.0042	2.8497
954	1	Extremo 1A	4.871	8.422	1.9E-08	-0.0255	-0.0042	0.5486
954	0	Extremo 2A	4.871	-6.859	1.9E-08	-0.0255	-0.0042	1.3306
954	0.5	Extremo 2A	4.871	0.782	1.9E-08	-0.0255	-0.0042	2.8499
954	1	Extremo 2A	4.871	8.422	1.9E-08	-0.0255	-0.0042	0.5488
955	0	Extremo 1A	4.871	-6.547	1.5E-08	-0.0029	-0.0042	0.7349
955	0.5	Extremo 1A	4.871	1.093	1.5E-08	-0.0029	-0.0042	2.0983
955	1	Extremo 1A	4.871	8.734	1.5E-08	-0.0029	-0.0042	-0.3586
955	0	Extremo 2A	4.871	-6.547	1.5E-08	-0.0029	-0.0042	0.735
955	0.5	Extremo 2A	4.871	1.093	1.5E-08	-0.0029	-0.0042	2.0985
955	1	Extremo 2A	4.871	8.734	1.5E-08	-0.0029	-0.0042	-0.3584
956	0	Extremo 1A	4.871	-6.383	1.2E-08	0.0679	-0.0042	-0.2937
956	0.5	Extremo 1A	4.871	1.258	1.2E-08	0.0679	-0.0042	0.9876
956	1	Extremo 1A	4.871	8.898	1.2E-08	0.0679	-0.0042	-1.5515
956	0	Extremo 2A	4.871	-6.383	1.2E-08	0.0679	-0.0042	-0.2935
956	0.5	Extremo 2A	4.871	1.258	1.2E-08	0.0679	-0.0042	0.9878
956	1	Extremo 2A	4.871	8.898	1.2E-08	0.0679	-0.0042	-1.5513
957	0	Extremo 1A	4.871	-6.485	9E-09	0.1784	-0.0042	-1.834
957	0.5	Extremo 1A	4.871	1.156	9E-09	0.1784	-0.0042	-0.5018
957	1	Extremo 1A	4.871	8.796	9E-09	0.1784	-0.0042	-2.9898
957	0	Extremo 2A	4.871	-6.485	9E-09	0.1784	-0.0042	-1.8338

957	0.5	Extremo 2A	4.871	1.156	9E-09	0.1784	-0.0042	-0.5016
957	1	Extremo 2A	4.871	8.796	9E-09	0.1784	-0.0042	-2.9896
958	0	Extremo 1A	4.871	-6.92	7.1E-09	0.2361	-0.0042	-3.7458
958	0.5	Extremo 1A	4.871	0.72	7.1E-09	0.2361	-0.0042	-2.1959
958	1	Extremo 1A	4.871	8.361	7.1E-09	0.2361	-0.0042	-4.4663
958	0	Extremo 2A	4.871	-6.92	7.1E-09	0.2361	-0.0042	-3.7456
958	0.5	Extremo 2A	4.871	0.72	7.1E-09	0.2361	-0.0042	-2.1957
958	1	Extremo 2A	4.871	8.361	7.1E-09	0.2361	-0.0042	-4.4661
959	0	Extremo 1A	4.871	-7.466	5.5E-09	0.1051	-0.0042	-5.2915
959	0.5	Extremo 1A	4.871	0.175	5.5E-09	0.1051	-0.0042	-3.4689
959	1	Extremo 1A	4.871	7.816	5.5E-09	0.1051	-0.0042	-5.4666
959	0	Extremo 2A	4.871	-7.466	5.5E-09	0.1051	-0.0042	-5.2913
959	0.5	Extremo 2A	4.871	0.175	5.5E-09	0.1051	-0.0042	-3.4686
959	1	Extremo 2A	4.871	7.816	5.5E-09	0.1051	-0.0042	-5.4663
960	0	Extremo 1A	4.871	-7.817	4.3E-09	-0.1051	-0.0042	-5.4667
960	0.5	Extremo 1A	4.871	-0.176	4.3E-09	-0.1051	-0.0042	-3.4683
960	1	Extremo 1A	4.871	7.464	4.3E-09	-0.1051	-0.0042	-5.2902
960	0	Extremo 2A	4.871	-7.817	4.3E-09	-0.1051	-0.0042	-5.4664
960	0.5	Extremo 2A	4.871	-0.176	4.3E-09	-0.1051	-0.0042	-3.468
960	1	Extremo 2A	4.871	7.464	4.3E-09	-0.1051	-0.0042	-5.29
961	0	Extremo 1A	4.871	-8.363	3.4E-09	-0.2361	-0.0042	-4.4651
961	0.5	Extremo 1A	4.871	-0.722	3.4E-09	-0.2361	-0.0042	-2.194
961	1	Extremo 1A	4.871	6.919	3.4E-09	-0.2361	-0.0042	-3.7432
961	0	Extremo 2A	4.871	-8.362	3.4E-09	-0.2361	-0.0042	-4.465
961	0.5	Extremo 2A	4.871	-0.722	3.4E-09	-0.2361	-0.0042	-2.1939
961	1	Extremo 2A	4.871	6.919	3.4E-09	-0.2361	-0.0042	-3.7431
962	0	Extremo 1A	4.871	-8.798	2.7E-09	-0.1783	-0.0042	-2.9874
962	0.5	Extremo 1A	4.871	-1.157	2.7E-09	-0.1783	-0.0042	-0.4986
962	1	Extremo 1A	4.871	6.483	2.7E-09	-0.1783	-0.0042	-1.8302
962	0	Extremo 2A	4.871	-8.798	2.6E-09	-0.1783	-0.0042	-2.9873
962	0.5	Extremo 2A	4.871	-1.157	2.6E-09	-0.1783	-0.0042	-0.4986
962	1	Extremo 2A	4.871	6.483	2.6E-09	-0.1783	-0.0042	-1.8302
963	0	Extremo 1A	4.871	-8.9	2.1E-09	-0.0679	-0.0042	-1.5478
963	0.5	Extremo 1A	4.871	-1.259	2.1E-09	-0.0679	-0.0042	0.992
963	1	Extremo 1A	4.871	6.381	2.1E-09	-0.0679	-0.0042	-0.2886
963	0	Extremo 2A	4.871	-8.9	2E-09	-0.0679	-0.0042	-1.5478
963	0.5	Extremo 2A	4.871	-1.259	2E-09	-0.0679	-0.0042	0.9919
963	1	Extremo 2A	4.871	6.381	2E-09	-0.0679	-0.0042	-0.2887
964	0	Extremo 1A	4.871	-8.735	1.6E-09	0.0029	-0.0042	-0.3537
964	0.5	Extremo 1A	4.871	-1.095	1.6E-09	0.0029	-0.0042	2.1039
964	1	Extremo 1A	4.871	6.546	1.6E-09	0.0029	-0.0042	0.7412
964	0	Extremo 2A	4.871	-8.735	1.6E-09	0.0029	-0.0042	-0.3537
964	0.5	Extremo 2A	4.871	-1.095	1.6E-09	0.0029	-0.0042	2.1038
964	1	Extremo 2A	4.871	6.546	1.6E-09	0.0029	-0.0042	0.741
965	0	Extremo 1A	4.871	-8.424	1.3E-09	0.0255	-0.0042	0.5548
965	0.5	Extremo 1A	4.871	-0.783	1.3E-09	0.0255	-0.0042	2.8566
965	1	Extremo 1A	4.871	6.857	1.3E-09	0.0255	-0.0042	1.3381
965	0	Extremo 2A	4.871	-8.424	1.2E-09	0.0255	-0.0042	0.5546
965	0.5	Extremo 2A	4.871	-0.783	1.2E-09	0.0255	-0.0042	2.8564
965	1	Extremo 2A	4.871	6.857	1.2E-09	0.0255	-0.0042	1.3378
966	0	Extremo 1A	4.871	-8.045	1E-09	0.0189	-0.0042	1.1802
966	0.5	Extremo 1A	4.871	-0.404	1E-09	0.0189	-0.0042	3.2924
966	1	Extremo 1A	4.871	7.237	1E-09	0.0189	-0.0042	1.5842
966	0	Extremo 2A	4.871	-8.045	9.3E-10	0.0189	-0.0042	1.18
966	0.5	Extremo 2A	4.871	-0.404	9.3E-10	0.0189	-0.0042	3.2921
966	1	Extremo 2A	4.871	7.237	9.3E-10	0.0189	-0.0042	1.5839
967	0	Extremo 1A	4.871	-7.64	7.8E-10	-6.3E-06	-0.0042	1.5252
967	0.5	Extremo 1A	4.871	0.00033	7.8E-10	-6.3E-06	-0.0042	3.4352
967	1	Extremo 1A	4.871	7.641	7.8E-10	-6.3E-06	-0.0042	1.5248
967	0	Extremo 2A	4.871	-7.64	6.9E-10	-8.2E-06	-0.0042	1.5248
967	0.5	Extremo 2A	4.871	0.00043	6.9E-10	-8.2E-06	-0.0042	3.4348
967	1	Extremo 2A	4.871	7.641	6.9E-10	-8.2E-06	-0.0042	1.5244
968	0	Extremo 1A	4.871	-7.236	6.1E-10	-0.0189	-0.0042	1.584
968	0.5	Extremo 1A	4.871	0.405	6.1E-10	-0.0189	-0.0042	3.2918
968	1	Extremo 1A	4.871	8.045	6.1E-10	-0.0189	-0.0042	1.1793
968	0	Extremo 2A	4.871	-7.236	4.9E-10	-0.0189	-0.0042	1.5836
968	0.5	Extremo 2A	4.871	0.405	4.9E-10	-0.0189	-0.0042	3.2913
968	1	Extremo 2A	4.871	8.045	4.9E-10	-0.0189	-0.0042	1.1788
969	0	Extremo 1A	4.871	-6.857	4.7E-10	-0.0256	-0.0042	1.3373
969	0.5	Extremo 1A	4.871	0.784	4.7E-10	-0.0256	-0.0042	2.8555
969	1	Extremo 1A	4.871	8.425	4.7E-10	-0.0256	-0.0042	0.5533
969	0	Extremo 2A	4.871	-6.857	3.2E-10	-0.0256	-0.0042	1.3368
969	0.5	Extremo 2A	4.871	0.784	3.2E-10	-0.0256	-0.0042	2.8549
969	1	Extremo 2A	4.871	8.425	3.2E-10	-0.0256	-0.0042	0.5527
970	0	Extremo 1A	4.871	-6.545	3.6E-10	-0.0029	-0.0042	0.7398
970	0.5	Extremo 1A	4.871	1.095	3.6E-10	-0.0029	-0.0042	2.1022
970	1	Extremo 1A	4.871	8.736	3.6E-10	-0.0029	-0.0042	-0.3557
970	0	Extremo 2A	4.871	-6.545	1.7E-10	-0.0029	-0.0042	0.7392
970	0.5	Extremo 2A	4.871	1.096	1.7E-10	-0.0029	-0.0042	2.1016
970	1	Extremo 2A	4.871	8.736	1.7E-10	-0.0029	-0.0042	-0.3564
971	0	Extremo 1A	4.871	-6.381	2.8E-10	0.0679	-0.0042	-0.2906
971	0.5	Extremo 1A	4.871	1.26	2.8E-10	0.0679	-0.0042	0.9896
971	1	Extremo 1A	4.871	8.9	2.8E-10	0.0679	-0.0042	-1.5504
971	0	Extremo 2A	4.871	-6.381	2.9E-11	0.0679	-0.0042	-0.2914
971	0.5	Extremo 2A	4.871	1.26	2.9E-11	0.0679	-0.0042	0.9889
971	1	Extremo 2A	4.871	8.9	2.9E-11	0.0679	-0.0042	-1.5512
972	0	Extremo 1A	4.871	-6.483	2E-10	0.1784	-0.0042	-1.833
972	0.5	Extremo 1A	4.871	1.158	2E-10	0.1784	-0.0042	-0.5016
972	1	Extremo 1A	4.871	8.798	2E-10	0.1784	-0.0042	-2.9906
972	0	Extremo 2A	4.871	-6.483	-1.1E-10	0.1784	-0.0042	-1.8338
972	0.5	Extremo 2A	4.871	1.158	-1.1E-10	0.1784	-0.0042	-0.5025
972	1	Extremo 2A	4.871	8.798	-1.1E-10	0.1784	-0.0042	-2.9914
973	0	Extremo 1A	4.871	-6.919	1.4E-10	0.2362	-0.0042	-3.7468
973	0.5	Extremo 1A	4.871	0.722	1.4E-10	0.2362	-0.0042	-2.1976
973	1	Extremo 1A	4.871	8.363	1.4E-10	0.2362	-0.0042	-4.4688
973	0	Extremo 2A	4.871	-6.919	-2.6E-10	0.2362	-0.0042	-3.7477
973	0.5	Extremo 2A	4.871	0.722	-2.6E-10	0.2362	-0.0042	-2.1986
973	1	Extremo 2A	4.871	8.363	-2.6E-10	0.2362	-0.0042	-4.4697
974	0	Extremo 1A	4.871	-7.464	8.8E-11	0.1051	-0.0042	-5.2942
974	0.5	Extremo 1A	4.871	0.176	8.8E-11	0.1051	-0.0042	-3.4722
974	1	Extremo 1A	4.871	7.817	8.8E-11	0.1051	-0.0042	-5.4705
974	0	Extremo 2A	4.871	-7.464	-4.3E-10	0.1051	-0.0042	-5.2952
974	0.5	Extremo 2A	4.871	0.176	-4.3E-10	0.1051	-0.0042	-3.4731
974	1	Extremo 2A	4.871	7.817	-4.3E-10	0.1051	-0.0042	-5.4714
975	0	Extremo 1A	4.871	-7.816	3.9E-11	-0.1051	-0.0042	-5.4704
975	0.5	Extremo 1A	4.871	-0.176	3.9E-11	-0.1051	-0.0042	-3.4725
975	1	Extremo 1A	4.871	7.465	3.9E-11	-0.1051	-0.0042	-5.2949
975	0	Extremo 2A	4.871	-7.816	-6.2E-10	-0.1051	-0.0042	-5.4714
975	0.5	Extremo 2A	4.871	-0.176	-6.2E-10	-0.1051	-0.0042	-3.4734
975	1	Extremo 2A	4.871	7.465	-6.2E-10	-0.1051	-0.0042	-5.2957
976	0	Extremo 1A	4.871	-8.362	-8.5E-12	-0.2362	-0.0042	-4.4694
976	0.5	Extremo 1A	4.871	-0.721	-8.5E-12	-0.2362	-0.0042	-2.1986
976	1	Extremo 1A	4.871	6.919	-8.5E-12	-0.2362	-0.0042	-3.7481
976	0	Extremo 2A	4.871	-8.362	-8.5E-10	-0.2362	-0.0042	-4.4701
976	0.5	Extremo 2A	4.871	-0.721	-8.5E-10	-0.2362	-0.0042	-2.1992
976	1	Extremo 2A	4.871	6.919	-8.5E-10	-0.2362	-0.0042	-3.7486
977	0	Extremo 1A	4.871	-8.797	-5.7E-11	-0.1784	-0.0042	-2.9919
977	0.5	Extremo 1A	4.871	-1.157	-5.7E-11	-0.1784	-0.0042	-0.5033
977	1	Extremo 1A	4.871	6.484	-5.7E-11	-0.1784	-0.0042	-1.835
977	0	Extremo 2A	4.871	-8.798	-1.1E-09	-0.1785	-0.0042	-2.9923
977	0.5	Extremo 2A	4.871	-1.157	-1.1E-09	-0.1785	-0.0042	-0.5035
977	1	Extremo 2A	4.871	6.483	-1.1E-09	-0.1785	-0.0042	-1.8351
978	0	Extremo 1A	4.871	-8.9	-1.1E-10	-0.0679	-0.0042	-1.5524
978	0.5	Extremo 1A	4.871	-1.259	-1.1E-10	-0.0679	-0.0042	0.9873
978	1	Extremo 1A	4.871	6.382	-1.1E-10	-0.0679	-0.0042	-0.2934
978	0	Extremo 2A	4.871	-8.9	-1.5E-09	-0.0679	-0.0042	-1.5524
978	0.5	Extremo 2A	4.871	-1.259	-1.5E-09	-0.0679	-0.0042	0.9874
978	1	Extremo 2A	4.871	6.381	-1.5E-09	-0.0679	-0.0042	-0.2931
979	0	Extremo 1A	4.871	-8.735	-1.7E-10	0.0029	-0.0042	-0.3583
979	0.5	Extremo 1A	4.871	-1.095	-1.7E-10	0.0029	-0.0042	2.0992
979	1	Extremo 1A	4.871	6.546	-1.7E-10	0.0029	-0.0042	0.7364
979	0	Extremo 2A	4.871	-8.736	-1.9E-09	0.0029	-0.0042	-0.3581
979	0.5	Extremo 2A	4.871	-1.095	-1.9E-09	0.0029	-0.0042	2.0997
979	1	Extremo 2A	4.871	6.546	-1.9E-09	0.0029	-0.0042	0.7371
980	0	Extremo 1A	4.871	-8.424	-2.4E-10	0.0255	-0.0042	0.55
980	0.5	Extremo 1A	4.871	-0.783	-2.4E-10	0.0255	-0.0042	2.8518
980	1	Extremo 1A	4.871	6.857	-2.4E-10	0.0255	-0.0042	1.3332
980	0	Extremo 2A	4.871	-8.424	-2.5E-09	0.0255	-0.0042	0.5506
980	0.5	Extremo 2A	4.871	-0.784	-2.5E-09	0.0255	-0.0042	2.8526
980	1	Extremo 2A	4.871	6.857	-2.5E-09	0.0255	-0.0042	1.3342
981	0	Extremo 1A	4.871	-8.045	-3.3E-10	0.0189	-0.0042	1.1753
981	0.5	Extremo 1A	4.871	-0.404	-3.3E-10	0.0189	-0.0042	3.2875
981	1	Extremo 1A	4.871	7.237	-3.3E-10	0.0189	-0.0042	1.5793
981	0	Extremo 2A	4.871	-8.045	-3.2E-09	0.0189	-0.0042	1.1763

981	0.5	Extremo 2A	4.871	-0.404	-3.2E-09	0.0189	-0.0042	3.2886
981	1	Extremo 2A	4.871	7.236	-3.2E-09	0.0189	-0.0042	1.5806
982	0	Extremo 1A	4.871	-7.64	-4.4E-10	-8.6E-06	-0.0042	1.5202
982	0.5	Extremo 1A	4.871	0.00045	-4.4E-10	-8.6E-06	-0.0042	3.4301
982	1	Extremo 1A	4.871	7.641	-4.4E-10	-8.6E-06	-0.0042	1.5198
982	0	Extremo 2A	4.871	-7.641	-4.1E-09	-1.1E-06	-0.0042	1.5215
982	0.5	Extremo 2A	4.871	6.2E-05	-4.1E-09	-1.1E-06	-0.0042	3.4316
982	1	Extremo 2A	4.871	7.641	-4.1E-09	-1.1E-06	-0.0042	1.5214
983	0	Extremo 1A	4.871	-7.236	-5.7E-10	-0.0189	-0.0042	1.5789
983	0.5	Extremo 1A	4.871	0.405	-5.7E-10	-0.0189	-0.0042	3.2867
983	1	Extremo 1A	4.871	8.045	-5.7E-10	-0.0189	-0.0042	1.1741
983	0	Extremo 2A	4.871	-7.236	-5.2E-09	-0.0189	-0.0042	1.5805
983	0.5	Extremo 2A	4.871	0.404	-5.2E-09	-0.0189	-0.0042	3.2885
983	1	Extremo 2A	4.871	8.045	-5.2E-09	-0.0189	-0.0042	1.1761
984	0	Extremo 1A	4.871	-6.857	-7.4E-10	-0.0255	-0.0042	1.3321
984	0.5	Extremo 1A	4.871	0.784	-7.4E-10	-0.0255	-0.0042	2.8502
984	1	Extremo 1A	4.871	8.425	-7.4E-10	-0.0255	-0.0042	0.548
984	0	Extremo 2A	4.871	-6.857	-6.7E-09	-0.0255	-0.0042	1.334
984	0.5	Extremo 2A	4.871	0.784	-6.7E-09	-0.0255	-0.0042	2.8524
984	1	Extremo 2A	4.871	8.424	-6.7E-09	-0.0255	-0.0042	0.5504
985	0	Extremo 1A	4.871	-6.545	-9.5E-10	-0.0029	-0.0042	0.7345
985	0.5	Extremo 1A	4.871	1.096	-9.5E-10	-0.0029	-0.0042	2.0969
985	1	Extremo 1A	4.871	8.736	-9.5E-10	-0.0029	-0.0042	-0.3611
985	0	Extremo 2A	4.871	-6.545	-8.6E-09	-0.0029	-0.0042	0.7368
985	0.5	Extremo 2A	4.871	1.095	-8.6E-09	-0.0029	-0.0042	2.0993
985	1	Extremo 2A	4.871	8.736	-8.6E-09	-0.0029	-0.0042	-0.3584
986	0	Extremo 1A	4.871	-6.381	-1.2E-09	0.068	-0.0042	-0.2962
986	0.5	Extremo 1A	4.871	1.26	-1.2E-09	0.068	-0.0042	0.9841
986	1	Extremo 1A	4.871	8.9	-1.2E-09	0.068	-0.0042	-1.5559
986	0	Extremo 2A	4.871	-6.381	-1.1E-08	0.0679	-0.0042	-0.2935
986	0.5	Extremo 2A	4.871	1.259	-1.1E-08	0.0679	-0.0042	0.9869
986	1	Extremo 2A	4.871	8.9	-1.1E-08	0.0679	-0.0042	-1.5529
987	0	Extremo 1A	4.871	-6.483	-1.6E-09	0.1786	-0.0042	-1.8388
987	0.5	Extremo 1A	4.871	1.157	-1.6E-09	0.1786	-0.0042	-0.5073
987	1	Extremo 1A	4.871	8.798	-1.6E-09	0.1786	-0.0042	-2.9962
987	0	Extremo 2A	4.871	-6.483	-1.4E-08	0.1785	-0.0042	-1.8356
987	0.5	Extremo 2A	4.871	1.157	-1.4E-08	0.1785	-0.0042	-0.5041
987	1	Extremo 2A	4.871	8.798	-1.4E-08	0.1785	-0.0042	-2.9929
988	0	Extremo 1A	4.871	-6.919	-2E-09	0.2364	-0.0042	-3.753
988	0.5	Extremo 1A	4.871	0.721	-2E-09	0.2364	-0.0042	-2.2035
988	1	Extremo 1A	4.871	8.362	-2E-09	0.2364	-0.0042	-4.4743
988	0	Extremo 2A	4.871	-6.919	-1.8E-08	0.2363	-0.0042	-3.7493
988	0.5	Extremo 2A	4.871	0.722	-1.8E-08	0.2363	-0.0042	-2.1999
988	1	Extremo 2A	4.871	8.362	-1.8E-08	0.2363	-0.0042	-4.4708
989	0	Extremo 1A	4.871	-7.465	-2.6E-09	0.1052	-0.0042	-5.3004
989	0.5	Extremo 1A	4.871	0.175	-2.6E-09	0.1052	-0.0042	-3.4778
989	1	Extremo 1A	4.871	7.816	-2.6E-09	0.1052	-0.0042	-5.4756
989	0	Extremo 2A	4.871	-7.465	-2.3E-08	0.1051	-0.0042	-5.2964
989	0.5	Extremo 2A	4.871	0.176	-2.3E-08	0.1051	-0.0042	-3.4741
989	1	Extremo 2A	4.871	7.816	-2.3E-08	0.1051	-0.0042	-5.4721
990	0	Extremo 1A	4.871	-7.818	-3.3E-09	-0.1052	-0.0042	-5.4757
990	0.5	Extremo 1A	4.871	-0.177	-3.3E-09	-0.1052	-0.0042	-3.4771
990	1	Extremo 1A	4.871	7.464	-3.3E-09	-0.1052	-0.0042	-5.2988
990	0	Extremo 2A	4.871	-7.817	-3E-08	-0.1051	-0.0042	-5.4721
990	0.5	Extremo 2A	4.871	-0.176	-3E-08	-0.1051	-0.0042	-3.4738
990	1	Extremo 2A	4.871	7.464	-3E-08	-0.1051	-0.0042	-5.2959
991	0	Extremo 1A	4.871	-8.364	-4.2E-09	-0.2363	-0.0042	-4.473
991	0.5	Extremo 1A	4.871	-0.723	-4.2E-09	-0.2363	-0.0042	-2.2013
991	1	Extremo 1A	4.871	6.918	-4.2E-09	-0.2363	-0.0042	-3.7499
991	0	Extremo 2A	4.871	-8.363	-3.8E-08	-0.2363	-0.0042	-4.4703
991	0.5	Extremo 2A	4.871	-0.722	-3.8E-08	-0.2363	-0.0042	-2.1991
991	1	Extremo 2A	4.871	6.919	-3.8E-08	-0.2363	-0.0042	-3.7482
992	0	Extremo 1A	4.871	-8.8	-5.4E-09	-0.1785	-0.0042	-2.9933
992	0.5	Extremo 1A	4.871	-1.159	-5.4E-09	-0.1785	-0.0042	-0.5037
992	1	Extremo 1A	4.871	6.482	-5.4E-09	-0.1785	-0.0042	-1.8343
992	0	Extremo 2A	4.871	-8.798	-4.9E-08	-0.1785	-0.0042	-2.9918
992	0.5	Extremo 2A	4.871	-1.158	-4.9E-08	-0.1785	-0.0042	-0.5027
992	1	Extremo 2A	4.871	6.483	-4.9E-08	-0.1785	-0.0042	-1.834
993	0	Extremo 1A	4.871	-8.902	-6.9E-09	-0.068	-0.0042	-1.5516
993	0.5	Extremo 1A	4.871	-1.261	-6.9E-09	-0.068	-0.0042	0.9892
993	1	Extremo 1A	4.871	6.379	-6.9E-09	-0.068	-0.0042	-0.2902
993	0	Extremo 2A	4.871	-8.901	-6.3E-08	-0.0679	-0.0042	-1.5514
993	0.5	Extremo 2A	4.871	-1.26	-6.3E-08	-0.0679	-0.0042	0.9888
993	1	Extremo 2A	4.871	6.381	-6.3E-08	-0.0679	-0.0042	-0.2913
994	0	Extremo 1A	4.871	-8.738	-8.9E-09	0.0029	-0.0042	-0.3553
994	0.5	Extremo 1A	4.871	-1.097	-8.9E-09	0.0029	-0.0042	2.1035
994	1	Extremo 1A	4.871	6.543	-8.9E-09	0.0029	-0.0042	0.7419
994	0	Extremo 2A	4.871	-8.736	-8.1E-08	0.0029	-0.0042	-0.3563
994	0.5	Extremo 2A	4.871	-1.096	-8.1E-08	0.0029	-0.0042	2.1017
994	1	Extremo 2A	4.871	6.545	-8.1E-08	0.0029	-0.0042	0.7395
995	0	Extremo 1A	4.871	-8.426	-1.1E-08	0.0256	-0.0042	0.5553
995	0.5	Extremo 1A	4.871	-0.786	-1.1E-08	0.0256	-0.0042	2.8583
995	1	Extremo 1A	4.871	6.855	-1.1E-08	0.0256	-0.0042	1.341
995	0	Extremo 2A	4.871	-8.425	-1E-07	0.0256	-0.0042	0.553
995	0.5	Extremo 2A	4.871	-0.784	-1E-07	0.0256	-0.0042	2.8553
995	1	Extremo 2A	4.871	6.856	-1E-07	0.0256	-0.0042	1.3373
996	0	Extremo 1A	4.871	-8.047	-1.5E-08	0.0189	-0.0042	1.1828
996	0.5	Extremo 1A	4.871	-0.407	-1.5E-08	0.0189	-0.0042	3.2962
996	1	Extremo 1A	4.871	7.234	-1.5E-08	0.0189	-0.0042	1.5893
996	0	Extremo 2A	4.871	-8.046	-1.3E-07	0.0189	-0.0042	1.1793
996	0.5	Extremo 2A	4.871	-0.405	-1.3E-07	0.0189	-0.0042	3.292
996	1	Extremo 2A	4.871	7.236	-1.3E-07	0.0189	-0.0042	1.5843
997	0	Extremo 1A	4.871	-7.643	-1.9E-08	4.2E-05	-0.0042	1.5299
997	0.5	Extremo 1A	4.871	-0.00217	-1.9E-08	4.2E-05	-0.0042	3.4411
997	1	Extremo 1A	4.871	7.638	-1.9E-08	4.2E-05	-0.0042	1.5321
997	0	Extremo 2A	4.871	-7.641	-1.7E-07	1.2E-05	-0.0042	1.5251
997	0.5	Extremo 2A	4.871	-0.00068	-1.7E-07	1.2E-05	-0.0042	3.4356
997	1	Extremo 2A	4.871	7.64	-1.7E-07	1.2E-05	-0.0042	1.5258
998	0	Extremo 1A	4.871	-7.238	-2.4E-08	-0.0188	-0.0042	1.5909
998	0.5	Extremo 1A	4.871	0.402	-2.4E-08	-0.0188	-0.0042	3.2999
998	1	Extremo 1A	4.871	8.043	-2.4E-08	-0.0188	-0.0042	1.1887
998	0	Extremo 2A	4.871	-7.237	-2.2E-07	-0.0189	-0.0042	1.5848
998	0.5	Extremo 2A	4.871	0.404	-2.2E-07	-0.0189	-0.0042	3.2931
998	1	Extremo 2A	4.871	8.044	-2.2E-07	-0.0189	-0.0042	1.1811
999	0	Extremo 1A	4.871	-6.859	-3.1E-08	-0.0255	-0.0042	1.3463
999	0.5	Extremo 1A	4.871	0.781	-3.1E-08	-0.0255	-0.0042	2.8657
999	1	Extremo 1A	4.871	8.422	-3.1E-08	-0.0255	-0.0042	0.5648
999	0	Extremo 2A	4.871	-6.858	-2.8E-07	-0.0255	-0.0042	1.339
999	0.5	Extremo 2A	4.871	0.783	-2.8E-07	-0.0255	-0.0042	2.8577
999	1	Extremo 2A	4.871	8.424	-2.8E-07	-0.0255	-0.0042	0.556
1000	0	Extremo 1A	4.871	-6.547	-3.9E-08	-0.003	-0.0042	0.7511
1000	0.5	Extremo 1A	4.871	1.093	-3.9E-08	-0.003	-0.0042	2.1147
1000	1	Extremo 1A	4.871	8.734	-3.9E-08	-0.003	-0.0042	-0.342
1000	0	Extremo 2A	4.871	-6.546	-3.6E-07	-0.0029	-0.0042	0.7424
1000	0.5	Extremo 2A	4.871	1.095	-3.6E-07	-0.0029	-0.0042	2.1053
1000	1	Extremo 2A	4.871	8.735	-3.6E-07	-0.0029	-0.0042	-0.3521
1001	0	Extremo 1A	4.871	-6.383	-5E-08	0.0677	-0.0042	-0.2768
1001	0.5	Extremo 1A	4.871	1.258	-5E-08	0.0677	-0.0042	1.0045
1001	1	Extremo 1A	4.871	8.898	-5E-08	0.0677	-0.0042	-1.5346
1001	0	Extremo 2A	4.871	-6.382	-4.7E-07	0.0679	-0.0042	-0.2871
1001	0.5	Extremo 2A	4.871	1.259	-4.7E-07	0.0679	-0.0042	0.9936
1001	1	Extremo 2A	4.871	8.9	-4.7E-07	0.0679	-0.0042	-1.546
1002	0	Extremo 1A	4.871	-6.484	-6.5E-08	0.178	-0.0042	-1.8161
1002	0.5	Extremo 1A	4.871	1.157	-6.5E-08	0.178	-0.0042	-0.4842
1002	1	Extremo 1A	4.871	8.797	-6.5E-08	0.178	-0.0042	-2.9727
1002	0	Extremo 2A	4.871	-6.484	-6.1E-07	0.1783	-0.0042	-1.8283
1002	0.5	Extremo 2A	4.871	1.157	-6.1E-07	0.1783	-0.0042	-0.4966
1002	1	Extremo 2A	4.871	8.798	-6.1E-07	0.1783	-0.0042	-2.9853
1003	0	Extremo 1A	4.871	-6.918	-8.3E-08	0.2357	-0.0042	-3.7269
1003	0.5	Extremo 1A	4.871	0.722	-8.3E-08	0.2357	-0.0042	-2.1779
1003	1	Extremo 1A	4.871	8.363	-8.3E-08	0.2357	-0.0042	-4.4493
1003	0	Extremo 2A	4.871	-6.919	-7.8E-07	0.2361	-0.0042	-3.741
1003	0.5	Extremo 2A	4.871	0.722	-7.8E-07	0.2361	-0.0042	-2.1917
1003	1	Extremo 2A	4.871	8.362	-7.8E-07	0.2361	-0.0042	-4.4628
1004	0	Extremo 1A	4.871	-7.462	-1.1E-07	0.1049	-0.0042	-5.2726
1004	0.5	Extremo 1A	4.871	0.178	-1.1E-07	0.1049	-0.0042	-3.4516
1004	1	Extremo 1A	4.871	7.819	-1.1E-07	0.1049	-0.0042	-5.4509
1004	0	Extremo 2A	4.871	-7.464	-1E-06	0.1051	-0.0042	-5.2877
1004	0.5	Extremo 2A	4.871	0.177	-1E-06	0.1051	-0.0042	-3.4658
1004	1	Extremo 2A	4.871	7.817	-1E-06	0.1051	-0.0042	-5.4642
1005	0	Extremo 1A	4.871	-7.813	-1.4E-07	-0.105	-0.0042	-5.4505
1005	0.5	Extremo 1A	4.871	-0.172	-1.4E-07	-0.105	-0.0042	-3.4542
1005	1	Extremo 1A	4.871	7.468	-1.4E-07	-0.105	-0.0042	-5.2783
1005	0	Extremo 2A	4.871	-7.816	-1.3E-06	-0.105	-0.0042	-5.4643

1005	0.5	Extremo 2A	4.871	-0.175	-1.3E-06	-0.105	-0.0042	-3.4667
1005	1	Extremo 2A	4.871	7.466	-1.3E-06	-0.105	-0.0042	-5.2894
1006	0	Extremo 1A	4.871	-8.357	-1.8E-07	-0.2358	-0.0042	-4.4542
1006	0.5	Extremo 1A	4.871	-0.716	-1.8E-07	-0.2358	-0.0042	-2.1858
1006	1	Extremo 1A	4.871	6.924	-1.8E-07	-0.2358	-0.0042	-3.7378
1006	0	Extremo 2A	4.871	-8.361	-1.7E-06	-0.236	-0.0042	-4.4646
1006	0.5	Extremo 2A	4.871	-0.72	-1.7E-06	-0.236	-0.0042	-2.1943
1006	1	Extremo 2A	4.871	6.92	-1.7E-06	-0.236	-0.0042	-3.7444
1007	0	Extremo 1A	4.871	-8.791	-2.3E-07	-0.1781	-0.0042	-2.9828
1007	0.5	Extremo 1A	4.871	-1.15	-2.3E-07	-0.1781	-0.0042	-0.4975
1007	1	Extremo 1A	4.871	6.49	-2.3E-07	-0.1781	-0.0042	-1.8324
1007	0	Extremo 2A	4.871	-8.796	-2.2E-06	-0.1783	-0.0042	-2.9888
1007	0.5	Extremo 2A	4.871	-1.155	-2.2E-06	-0.1783	-0.0042	-0.501
1007	1	Extremo 2A	4.871	6.485	-2.2E-06	-0.1783	-0.0042	-1.8335
1008	0	Extremo 1A	4.871	-8.892	-2.9E-07	-0.0678	-0.0042	-1.5501
1008	0.5	Extremo 1A	4.871	-1.252	-2.9E-07	-0.0678	-0.0042	0.986
1008	1	Extremo 1A	4.871	6.389	-2.9E-07	-0.0678	-0.0042	-0.2983
1008	0	Extremo 2A	4.871	-8.898	-2.8E-06	-0.0678	-0.0042	-1.5513
1008	0.5	Extremo 2A	4.871	-1.257	-2.8E-06	-0.0678	-0.0042	0.9875
1008	1	Extremo 2A	4.871	6.383	-2.8E-06	-0.0678	-0.0042	-0.294
1009	0	Extremo 1A	4.871	-8.728	-3.7E-07	0.0028	-0.0042	-0.3628
1009	0.5	Extremo 1A	4.871	-1.087	-3.7E-07	0.0028	-0.0042	2.0909
1009	1	Extremo 1A	4.871	6.554	-3.7E-07	0.0028	-0.0042	0.7243
1009	0	Extremo 2A	4.871	-8.733	-3.6E-06	0.0029	-0.0042	-0.3591
1009	0.5	Extremo 2A	4.871	-1.093	-3.6E-06	0.0029	-0.0042	2.0974
1009	1	Extremo 2A	4.871	6.548	-3.6E-06	0.0029	-0.0042	0.7337
1010	0	Extremo 1A	4.871	-8.416	-4.8E-07	0.0254	-0.0042	0.5388
1010	0.5	Extremo 1A	4.871	-0.775	-4.8E-07	0.0254	-0.0042	2.8367
1010	1	Extremo 1A	4.871	6.865	-4.8E-07	0.0254	-0.0042	1.3142
1010	0	Extremo 2A	4.871	-8.422	-4.7E-06	0.0256	-0.0042	0.5473
1010	0.5	Extremo 2A	4.871	-0.781	-4.7E-06	0.0256	-0.0042	2.848
1010	1	Extremo 2A	4.871	6.859	-4.7E-06	0.0256	-0.0042	1.3285
1011	0	Extremo 1A	4.871	-8.037	-6.2E-07	0.0187	-0.0042	1.1574
1011	0.5	Extremo 1A	4.871	-0.396	-6.2E-07	0.0187	-0.0042	3.2656
1011	1	Extremo 1A	4.871	7.245	-6.2E-07	0.0187	-0.0042	1.5534
1011	0	Extremo 2A	4.871	-8.043	-6.1E-06	0.0189	-0.0042	1.1707
1011	0.5	Extremo 2A	4.871	-0.402	-6.1E-06	0.0189	-0.0042	3.2818
1011	1	Extremo 2A	4.871	7.239	-6.1E-06	0.0189	-0.0042	1.5726
1012	0	Extremo 1A	4.871	-7.632	-8E-07	-0.00017	-0.0042	1.4955
1012	0.5	Extremo 1A	4.871	0.00838	-8E-07	-0.00017	-0.0042	3.4015
1012	1	Extremo 1A	4.871	7.649	-8E-07	-0.00017	-0.0042	1.4872
1012	0	Extremo 2A	4.871	-7.638	-7.9E-06	-1.4E-05	-0.0042	1.5136
1012	0.5	Extremo 2A	4.871	0.0025	-7.9E-06	-1.4E-05	-0.0042	3.4226
1012	1	Extremo 2A	4.871	7.643	-7.9E-06	-1.4E-05	-0.0042	1.5111
1013	0	Extremo 1A	4.871	-7.228	-1E-06	-0.019	-0.0042	1.5475
1013	0.5	Extremo 1A	4.871	0.413	-1E-06	-0.019	-0.0042	3.2513
1013	1	Extremo 1A	4.871	8.053	-1E-06	-0.019	-0.0042	1.1348
1013	0	Extremo 2A	4.871	-7.234	-1E-05	-0.0189	-0.0042	1.5705
1013	0.5	Extremo 2A	4.871	0.407	-1E-05	-0.0189	-0.0042	3.2772
1013	1	Extremo 2A	4.871	8.048	-1E-05	-0.0189	-0.0042	1.1636
1014	0	Extremo 1A	4.871	-6.849	-1.3E-06	-0.0256	-0.0042	1.2937
1014	0.5	Extremo 1A	4.871	0.792	-1.3E-06	-0.0256	-0.0042	2.808
1014	1	Extremo 1A	4.871	8.432	-1.3E-06	-0.0256	-0.0042	0.5019
1014	0	Extremo 2A	4.871	-6.854	-1.3E-05	-0.0256	-0.0042	1.3219
1014	0.5	Extremo 2A	4.871	0.786	-1.3E-05	-0.0256	-0.0042	2.8389
1014	1	Extremo 2A	4.871	8.427	-1.3E-05	-0.0256	-0.0042	0.5356
1015	0	Extremo 1A	4.871	-6.538	-1.7E-06	-0.0026	-0.0042	0.6888
1015	0.5	Extremo 1A	4.871	1.103	-1.7E-06	-0.0026	-0.0042	2.0475
1015	1	Extremo 1A	4.871	8.743	-1.7E-06	-0.0026	-0.0042	-0.414
1015	0	Extremo 2A	4.871	-6.543	-1.7E-05	-0.0029	-0.0042	0.7225
1015	0.5	Extremo 2A	4.871	1.098	-1.7E-05	-0.0029	-0.0042	2.0836
1015	1	Extremo 2A	4.871	8.739	-1.7E-05	-0.0029	-0.0042	-0.3755
1016	0	Extremo 1A	4.871	-6.375	-2.2E-06	0.0689	-0.0042	-0.3502
1016	0.5	Extremo 1A	4.871	1.265	-2.2E-06	0.0689	-0.0042	0.9272
1016	1	Extremo 1A	4.871	8.906	-2.2E-06	0.0689	-0.0042	-1.6157
1016	0	Extremo 2A	4.871	-6.378	-2.3E-05	0.0679	-0.0042	-0.3101
1016	0.5	Extremo 2A	4.871	1.262	-2.3E-05	0.0679	-0.0042	0.969
1016	1	Extremo 2A	4.871	8.903	-2.3E-05	0.0679	-0.0041	-1.5723
1017	0	Extremo 1A	4.871	-6.481	-2.9E-06	0.1803	-0.0042	-1.9027
1017	0.5	Extremo 1A	4.871	1.16	-2.9E-06	0.1803	-0.0042	-0.5725
1017	1	Extremo 1A	4.871	8.801	-2.9E-06	0.1803	-0.0042	-3.0626
1017	0	Extremo 2A	4.871	-6.481	-3E-05	0.1785	-0.0042	-1.8547
1017	0.5	Extremo 2A	4.871	1.16	-3E-05	0.1785	-0.0042	-0.5244
1017	1	Extremo 2A	4.871	8.8	-3E-05	0.1785	-0.0041	-3.0143
1018	0	Extremo 1A	4.871	-6.922	-3.7E-06	0.2385	-0.0042	-3.8272
1018	0.5	Extremo 1A	4.871	0.718	-3.7E-06	0.2385	-0.0042	-2.2762
1018	1	Extremo 1A	4.871	8.359	-3.7E-06	0.2385	-0.0042	-4.5456
1018	0	Extremo 2A	4.871	-6.918	-3.9E-05	0.2362	-0.0042	-3.7707
1018	0.5	Extremo 2A	4.871	0.723	-3.9E-05	0.2362	-0.0042	-2.2221
1018	1	Extremo 2A	4.871	8.364	-3.9E-05	0.2362	-0.0041	-4.4938
1019	0	Extremo 1A	4.871	-7.475	-4.8E-06	0.1064	-0.0042	-5.3799
1019	0.5	Extremo 1A	4.871	0.166	-4.8E-06	0.1064	-0.0042	-3.5528
1019	1	Extremo 1A	4.871	7.807	-4.8E-06	0.1064	-0.0042	-5.546
1019	0	Extremo 2A	4.871	-7.464	-5E-05	0.1046	-0.0042	-5.3187
1019	0.5	Extremo 2A	4.871	0.176	-5E-05	0.1046	-0.0042	-3.4967
1019	1	Extremo 2A	4.871	7.817	-5E-05	0.1046	-0.0041	-5.495
1020	0	Extremo 1A	4.871	-7.831	-6.3E-06	-0.1056	-0.0042	-5.5483
1020	0.5	Extremo 1A	4.871	-0.191	-6.3E-06	-0.1056	-0.0042	-3.5428
1020	1	Extremo 1A	4.871	7.45	-6.3E-06	-0.1056	-0.0042	-5.3576
1020	0	Extremo 2A	4.87	-7.817	-6.6E-05	-0.1064	-0.0042	-5.4915
1020	0.5	Extremo 2A	4.87	-0.176	-6.6E-05	-0.1064	-0.0042	-3.4934
1020	1	Extremo 2A	4.87	7.465	-6.6E-05	-0.1064	-0.0041	-5.3156
1021	0	Extremo 1A	4.871	-8.384	-8.1E-06	-0.2378	-0.0042	-4.5278
1021	0.5	Extremo 1A	4.871	-0.743	-8.1E-06	-0.2378	-0.0042	-2.2462
1021	1	Extremo 1A	4.871	6.898	-8.1E-06	-0.2378	-0.0042	-3.7849
1021	0	Extremo 2A	4.87	-8.363	-8.6E-05	-0.238	-0.0042	-4.4838
1021	0.5	Extremo 2A	4.87	-0.723	-8.6E-05	-0.238	-0.0042	-2.2123
1021	1	Extremo 2A	4.87	6.918	-8.6E-05	-0.238	-0.0041	-3.7611
1022	0	Extremo 1A	4.871	-8.825	-1.1E-05	-0.1795	-0.0042	-3.0249
1022	0.5	Extremo 1A	4.871	-1.184	-1.1E-05	-0.1795	-0.0042	-0.5225
1022	1	Extremo 1A	4.871	6.456	-1.1E-05	-0.1795	-0.0042	-1.8404
1022	0	Extremo 2A	4.87	-8.8	-0.00011	-0.1802	-0.0042	-2.9978
1022	0.5	Extremo 2A	4.87	-1.159	-0.00011	-0.1802	-0.0042	-0.508
1022	1	Extremo 2A	4.87	6.481	-0.00011	-0.1802	-0.0041	-1.8385
1023	0	Extremo 1A	4.871	-8.931	-1.4E-05	-0.0681	-0.0042	-1.558
1023	0.5	Extremo 1A	4.871	-1.29	-1.4E-05	-0.0681	-0.0042	0.9972
1023	1	Extremo 1A	4.871	6.351	-1.4E-05	-0.0681	-0.0042	-0.2679
1023	0	Extremo 2A	4.869	-8.903	-0.00015	-0.0696	-0.0042	-1.5493
1023	0.5	Extremo 2A	4.869	-1.262	-0.00015	-0.0696	-0.0042	0.9919
1023	1	Extremo 2A	4.869	6.379	-0.00015	-0.0696	-0.0041	-0.2873
1024	0	Extremo 1A	4.871	-8.768	-1.8E-05	0.0033	-0.0042	-0.3363
1024	0.5	Extremo 1A	4.871	-1.127	-1.8E-05	0.0033	-0.0042	2.1376
1024	1	Extremo 1A	4.871	6.513	-1.8E-05	0.0033	-0.0042	0.7911
1024	0	Extremo 2A	4.868	-8.739	-0.00019	0.0014	-0.0043	-0.3462
1024	0.5	Extremo 2A	4.868	-1.098	-0.00019	0.0014	-0.0042	2.113
1024	1	Extremo 2A	4.868	6.543	-0.00019	0.0014	-0.0041	0.7518
1025	0	Extremo 1A	4.871	-8.457	-2.3E-05	0.0263	-0.0042	0.5996
1025	0.5	Extremo 1A	4.871	-0.816	-2.3E-05	0.0263	-0.0042	2.918
1025	1	Extremo 1A	4.871	6.824	-2.3E-05	0.0263	-0.0041	1.4161
1025	0	Extremo 2A	4.867	-8.427	-0.00026	0.0242	-0.0043	0.5711
1025	0.5	Extremo 2A	4.867	-0.787	-0.00026	0.0242	-0.0042	2.8746
1025	1	Extremo 2A	4.867	6.854	-0.00026	0.0242	-0.004	1.3578
1026	0	Extremo 1A	4.871	-8.078	-3E-05	0.0197	-0.0042	1.2525
1026	0.5	Extremo 1A	4.871	-0.437	-3E-05	0.0197	-0.0042	3.3814
1026	1	Extremo 1A	4.871	7.203	-3E-05	0.0197	-0.0041	1.6899
1026	0	Extremo 2A	4.866	-8.049	-0.00034	0.0177	-0.0043	1.2049
1026	0.5	Extremo 2A	4.866	-0.408	-0.00034	0.0177	-0.0041	3.3191
1026	1	Extremo 2A	4.866	7.232	-0.00034	0.0177	-0.004	1.613
1027	0	Extremo 1A	4.871	-7.674	-3.9E-05	0.00081	-0.0042	1.6251
1027	0.5	Extremo 1A	4.871	-0.033	-3.9E-05	0.00081	-0.0042	3.5517
1027	1	Extremo 1A	4.871	7.608	-3.9E-05	0.00081	-0.0041	1.658
1027	0	Extremo 2A	4.864	-7.646	-0.00044	-0.00069	-0.0044	1.5577
1027	0.5	Extremo 2A	4.864	-0.00496	-0.00044	-0.00069	-0.0041	3.4703
1027	1	Extremo 2A	4.864	7.636	-0.00044	-0.00069	-0.0039	1.5626
1028	0	Extremo 1A	4.871	-7.269	-5.2E-05	-0.0183	-0.0042	1.7119
1028	0.5	Extremo 1A	4.871	0.372	-5.2E-05	-0.0183	-0.0042	3.4361
1028	1	Extremo 1A	4.871	8.013	-5.2E-05	-0.0183	-0.0041	1.34
1028	0	Extremo 2A	4.862	-7.243	-0.00059	-0.0188	-0.0044	1.6233
1028	0.5	Extremo 2A	4.862	0.397	-0.00059	-0.0188	-0.0041	3.3348
1028	1	Extremo 2A	4.862	8.038	-0.00059	-0.0188	-0.0038	1.226
1029	0	Extremo 1A	4.87	-6.888	-6.7E-05	-0.0257	-0.0042	1.4941
1029	0.5	Extremo 1A	4.87	0.753	-6.7E-05	-0.0257	-0.0042	3.028
1029	1	Extremo 1A	4.87	8.393	-6.7E-05	-0.0257	-0.0041	0.7415
1029	0	Extremo 2A	4.859	-6.868	-0.00078	-0.0242	-0.0045	1.3818

1029	0.5	Extremo 2A	4.859	0.773	-0.00078	-0.0242	-0.0041	2.9054
1029	1	Extremo 2A	4.859	8.414	-0.00078	-0.0242	-0.0037	0.6088
1030	0	Extremo 1A	4.87	-6.573	-8.8E-05	-0.0047	-0.0042	0.9279
1030	0.5	Extremo 1A	4.87	1.068	-8.8E-05	-0.0047	-0.0042	2.3043
1030	1	Extremo 1A	4.87	8.708	-8.8E-05	-0.0047	-0.0041	-0.1397
1030	0	Extremo 2A	4.855	-6.562	-0.00103	0.00036	-0.0046	0.7869
1030	0.5	Extremo 2A	4.855	1.079	-0.00103	0.00036	-0.0041	2.1577
1030	1	Extremo 2A	4.855	8.719	-0.00103	0.00036	-0.0036	-0.2918
1031	0	Extremo 1A	4.869	-6.401	-0.00012	0.063	-0.0042	-0.0664
1031	0.5	Extremo 1A	4.869	1.24	-0.00012	0.063	-0.0042	1.2238
1031	1	Extremo 1A	4.869	8.88	-0.00012	0.063	-0.0041	-1.3062
1031	0	Extremo 2A	4.85	-6.406	-0.00136	0.0739	-0.0048	-0.2444
1031	0.5	Extremo 2A	4.85	1.234	-0.00136	0.0739	-0.0041	1.0485
1031	1	Extremo 2A	4.85	8.875	-0.00136	0.0739	-0.0034	-1.4789
1032	0	Extremo 1A	4.869	-6.487	-0.00015	0.1691	-0.0042	-1.5653
1032	0.5	Extremo 1A	4.869	1.154	-0.00015	0.1691	-0.0042	-0.232
1032	1	Extremo 1A	4.869	8.794	-0.00015	0.1691	-0.0041	-2.719
1032	0	Extremo 2A	4.843	-6.52	-0.00181	0.1881	-0.005	-1.7921
1032	0.5	Extremo 2A	4.843	1.12	-0.00181	0.1881	-0.0041	-0.4421
1032	1	Extremo 2A	4.843	8.761	-0.00181	0.1881	-0.0032	-2.9124
1033	0	Extremo 1A	4.868	-6.896	-0.0002	0.2243	-0.0043	-3.4327
1033	0.5	Extremo 1A	4.868	0.745	-0.0002	0.2243	-0.0042	-1.8949
1033	1	Extremo 1A	4.868	8.385	-0.0002	0.2243	-0.0041	-4.1774
1033	0	Extremo 2A	4.834	-6.971	-0.0024	0.2504	-0.0053	-3.7164
1033	0.5	Extremo 2A	4.834	0.669	-0.0024	0.2504	-0.0041	-2.1408
1033	1	Extremo 2A	4.834	8.31	-0.0024	0.2504	-0.0029	-4.3856
1034	0	Extremo 1A	4.867	-7.412	-0.00026	0.0965	-0.0043	-4.9541
1034	0.5	Extremo 1A	4.867	0.229	-0.00026	0.0965	-0.0042	-3.1583
1034	1	Extremo 1A	4.867	7.869	-0.00026	0.0965	-0.004	-5.1829
1034	0	Extremo 2A	4.821	-7.535	-0.0032	0.1246	-0.0057	-5.2798
1034	0.5	Extremo 2A	4.821	0.105	-0.0032	0.1246	-0.0041	-3.4224
1034	1	Extremo 2A	4.821	7.746	-0.0032	0.1246	-0.0025	-5.3853
1035	0	Extremo 1A	4.866	-7.74	-0.00034	-0.1079	-0.0043	-5.1561
1035	0.5	Extremo 1A	4.866	-0.099	-0.00034	-0.1079	-0.0041	-3.1963
1035	1	Extremo 1A	4.866	7.541	-0.00034	-0.1079	-0.004	-5.0568
1035	0	Extremo 2A	4.805	-7.906	-0.00427	-0.0802	-0.0062	-5.4778
1035	0.5	Extremo 2A	4.805	-0.266	-0.00427	-0.0802	-0.004	-3.4348
1035	1	Extremo 2A	4.805	7.375	-0.00427	-0.0802	-0.0019	-5.2121
1036	0	Extremo 1A	4.864	-8.256	-0.00045	-0.2357	-0.0044	-4.2267
1036	0.5	Extremo 1A	4.864	-0.615	-0.00045	-0.2357	-0.0041	-2.0089
1036	1	Extremo 1A	4.864	7.025	-0.00045	-0.2357	-0.0039	-3.6115
1036	0	Extremo 2A	4.782	-8.47	-0.00571	-0.2061	-0.0068	-4.5029
1036	0.5	Extremo 2A	4.782	-0.829	-0.00571	-0.2061	-0.004	-2.178
1036	1	Extremo 2A	4.782	6.811	-0.00571	-0.2061	-0.0011	-3.6735
1037	0	Extremo 1A	4.862	-8.665	-0.0006	-0.1804	-0.0044	-2.8446
1037	0.5	Extremo 1A	4.862	-1.024	-0.0006	-0.1804	-0.0041	-0.4222
1037	1	Extremo 1A	4.862	6.616	-0.0006	-0.1804	-0.0038	-1.8201
1037	0	Extremo 2A	4.752	-8.921	-0.00765	-0.1439	-0.0077	-3.054
1037	0.5	Extremo 2A	4.752	-1.28	-0.00765	-0.1439	-0.0039	-0.5038
1037	1	Extremo 2A	4.752	6.361	-0.00765	-0.1439	-8.4E-05	-1.774
1038	0	Extremo 1A	4.859	-8.751	-0.00079	-0.0741	-0.0045	-1.5081
1038	0.5	Extremo 1A	4.859	-1.111	-0.00079	-0.0741	-0.0041	0.9574
1038	1	Extremo 1A	4.859	6.53	-0.00079	-0.0741	-0.0037	-0.3973
1038	0	Extremo 2A	4.712	-9.034	-0.01	-0.0302	-0.0089	-1.6443
1038	0.5	Extremo 2A	4.712	-1.393	-0.01	-0.0302	-0.0038	0.9625
1038	1	Extremo 2A	4.712	6.247	-0.01	-0.0302	0.0013	-0.251
1039	0	Extremo 1A	4.855	-8.58	-0.00105	-0.0061	-0.0046	-0.4185
1039	0.5	Extremo 1A	4.855	-0.939	-0.00105	-0.0061	-0.0041	1.9614
1039	1	Extremo 1A	4.855	6.701	-0.00105	-0.0061	-0.0036	0.5209
1039	0	Extremo 2A	4.658	-8.877	-0.014	0.0427	-0.0106	-0.4801
1039	0.5	Extremo 2A	4.658	-1.236	-0.014	0.0427	-0.0037	2.0481
1039	1	Extremo 2A	4.658	6.405	-0.014	0.0427	0.0032	0.7561
1040	0	Extremo 1A	4.849	-8.267	-0.00139	0.0156	-0.0048	0.385
1040	0.5	Extremo 1A	4.849	-0.626	-0.00139	0.0156	-0.0041	2.6082
1040	1	Extremo 1A	4.849	7.015	-0.00139	0.0156	-0.0034	1.011
1040	0	Extremo 2A	4.585	-8.568	-0.019	0.0659	-0.0128	0.3999
1040	0.5	Extremo 2A	4.585	-0.927	-0.019	0.0659	-0.0035	2.7736
1040	1	Extremo 2A	4.585	6.713	-0.019	0.0659	0.0058	1.3271
1041	0	Extremo 1A	4.842	-7.889	-0.00184	0.0094	-0.005	0.9041
1041	0.5	Extremo 1A	4.842	-0.248	-0.00184	0.0094	-0.0041	2.9384
1041	1	Extremo 1A	4.842	7.392	-0.00184	0.0094	-0.0032	1.1525
1041	0	Extremo 2A	4.487	-8.186	-0.025	0.0581	-0.0158	0.9999
1041	0.5	Extremo 2A	4.487	-0.546	-0.025	0.0581	-0.0033	3.183
1041	1	Extremo 2A	4.487	7.095	-0.025	0.0581	0.0092	1.5458
1042	0	Extremo 1A	4.833	-7.49	-0.00244	-0.0073	-0.0053	1.1396
1042	0.5	Extremo 1A	4.833	0.151	-0.00244	-0.0073	-0.0041	2.9745
1042	1	Extremo 1A	4.833	7.791	-0.00244	-0.0073	-0.0029	0.9891
1042	0	Extremo 2A	4.354	-7.774	-0.034	0.0357	-0.0199	1.3256
1042	0.5	Extremo 2A	4.354	-0.133	-0.034	0.0357	-0.003	3.3025
1042	1	Extremo 2A	4.354	7.507	-0.034	0.0357	0.0139	1.4591
1043	0	Extremo 1A	4.82	-7.097	-0.00325	-0.0215	-0.0057	1.0829
1043	0.5	Extremo 1A	4.82	0.543	-0.00325	-0.0215	-0.0041	2.7213
1043	1	Extremo 1A	4.82	8.184	-0.00325	-0.0215	-0.0024	0.5394
1043	0	Extremo 2A	4.175	-7.353	-0.046	0.0097	-0.0254	1.3761
1043	0.5	Extremo 2A	4.175	0.287	-0.046	0.0097	-0.0026	3.1425
1043	1	Extremo 2A	4.175	7.928	-0.046	0.0097	0.0202	1.0886
1044	0	Extremo 1A	4.803	-6.74	-0.00434	-0.0189	-0.0062	0.7083
1044	0.5	Extremo 1A	4.803	0.9	-0.00434	-0.0189	-0.004	2.1683
1044	1	Extremo 1A	4.803	8.541	-0.00434	-0.0189	-0.0018	-0.192
1044	0	Extremo 2A	3.938	-6.944	-0.061	-0.0097	-0.0327	1.1402
1044	0.5	Extremo 2A	3.938	0.697	-0.061	-0.0097	-0.0021	2.7021
1044	1	Extremo 2A	3.938	8.337	-0.061	-0.0097	0.0285	0.4437
1045	0	Extremo 1A	4.781	-6.472	-0.0058	0.021	-0.0069	-0.0407
1045	0.5	Extremo 1A	4.781	1.169	-0.0058	0.021	-0.004	1.2851
1045	1	Extremo 1A	4.781	8.809	-0.0058	0.021	-0.0011	-1.2095
1045	0	Extremo 2A	3.629	-6.579	-0.081	-0.0085	-0.0419	0.5877
1045	0.5	Extremo 2A	3.629	1.062	-0.081	-0.0085	-0.0015	1.967
1045	1	Extremo 2A	3.629	8.702	-0.081	-0.0085	0.0389	-0.4739
1046	0	Extremo 1A	4.75	-6.388	-0.00777	0.1208	-0.0078	-1.265
1046	0.5	Extremo 1A	4.75	1.252	-0.00777	0.1208	-0.0039	0.019
1046	1	Extremo 1A	4.75	8.893	-0.00777	0.1208	-2E-05	-2.5174
1046	0	Extremo 2A	3.249	-6.316	-0.103	0.0364	-0.0526	-0.3482
1046	0.5	Extremo 2A	3.249	1.325	-0.103	0.0364	-0.00089	0.8996
1046	1	Extremo 2A	3.249	8.965	-0.103	0.0364	0.0508	-1.673
1047	0	Extremo 1A	4.71	-6.632	-0.01	0.2708	-0.009	-3.0609
1047	0.5	Extremo 1A	4.71	1.009	-0.01	0.2708	-0.0038	-1.6552
1047	1	Extremo 1A	4.71	8.649	-0.01	0.2708	0.0014	-4.0698
1047	0	Extremo 2A	2.828	-6.26	-0.122	0.1468	-0.0617	-1.794
1047	0.5	Extremo 2A	2.828	1.38	-0.122	0.1468	-0.00073	-0.574
1047	1	Extremo 2A	2.828	9.021	-0.122	0.1468	0.0602	-3.1743
1048	0	Extremo 1A	4.655	-7.281	-0.014	0.3611	-0.0107	-5.2643
1048	0.5	Extremo 1A	4.655	0.36	-0.014	0.3611	-0.0037	-3.534
1048	1	Extremo 1A	4.655	8	-0.014	0.3611	0.0033	-5.6239
1048	0	Extremo 2A	2.435	-6.599	-0.129	0.2464	-0.0665	-3.8468
1048	0.5	Extremo 2A	2.435	1.042	-0.129	0.2464	-0.0021	-2.4577
1048	1	Extremo 2A	2.435	8.683	-0.129	0.2464	0.0623	-4.8888
1049	0	Extremo 1A	4.581	-8.068	-0.019	0.2299	-0.013	-7.0032
1049	0.5	Extremo 1A	4.581	-0.427	-0.019	0.2299	-0.0035	-4.8794
1049	1	Extremo 1A	4.581	7.213	-0.019	0.2299	0.0059	-6.576
1049	0	Extremo 2A	2.043	-7.097	-0.122	0.1152	-0.0644	-5.7757
1049	0.5	Extremo 2A	2.043	0.543	-0.122	0.1152	-0.0034	-4.1372
1049	1	Extremo 2A	2.043	8.184	-0.122	0.1152	0.0575	-6.3191
1050	0	Extremo 1A	4.481	-8.625	-0.025	0.0039	-0.016	-7.0874
1050	0.5	Extremo 1A	4.481	-0.984	-0.025	0.0039	-0.0033	-4.6852
1050	1	Extremo 1A	4.481	6.657	-0.025	0.0039	0.0094	-6.1033
1050	0	Extremo 2A	1.622	-7.415	-0.103	-0.1611	-0.055	-6.1834
1050	0.5	Extremo 2A	1.622	0.226	-0.103	-0.1611	-0.0033	-4.386
1050	1	Extremo 2A	1.622	7.866	-0.103	-0.1611	0.0484	-6.409
1051	0	Extremo 1A	4.346	-9.396	-0.034	-0.1337	-0.0202	-5.7355
1051	0.5	Extremo 1A	4.346	-1.755	-0.034	-0.1337	-0.003	-2.9479
1051	1	Extremo 1A	4.346	5.886	-0.034	-0.1337	0.0142	-3.9806
1051	0	Extremo 2A	1.241	-8.119	-0.081	-0.3488	-0.0431	-5.1371
1051	0.5	Extremo 2A	1.241	-0.479	-0.081	-0.3488	-0.0027	-2.9875
1051	1	Extremo 2A	1.241	7.162	-0.081	-0.3488	0.0378	-4.6582
1052	0	Extremo 1A	4.165	-10.008	-0.046	-0.0585	-0.0257	-3.7596
1052	0.5	Extremo 1A	4.165	-2.367	-0.046	-0.0585	-0.0026	-0.666
1052	1	Extremo 1A	4.165	5.274	-0.046	-0.0585	0.0205	-1.3927
1052	0	Extremo 2A	0.933	-8.77	-0.061	-0.2823	-0.0327	-3.4347
1052	0.5	Extremo 2A	0.933	-1.129	-0.061	-0.2823	-0.0021	-0.96
1052	1	Extremo 2A	0.933	6.512	-0.061	-0.2823	0.0286	-2.3056
1053	0	Extremo 1A	3.925	-10.18	-0.062	0.0624	-0.0331	-1.7446
1053	0.5	Extremo 1A	3.925	-2.539	-0.062	0.0624	-0.0021	1.4353
1053	1	Extremo 1A	3.925	5.101	-0.062	0.0624	0.0289	0.7948
1053	0	Extremo 2A	0.695	-9.032	-0.046	-0.1356	-0.0244	-1.7084

1053	0.5	Extremo 2A	0.695	-1.391	-0.046	-0.1356	-0.0015	0.8973
1053	1	Extremo 2A	0.695	6.25	-0.046	-0.1356	0.0213	-0.3173
1054	0	Extremo 1A	3.612	-9.966	-0.082	0.1114	-0.0424	0.1003
1054	0.5	Extremo 1A	3.612	-2.326	-0.082	0.1114	-0.0015	3.1732
1054	1	Extremo 1A	3.612	5.315	-0.082	0.1114	0.0395	2.4258
1054	0	Extremo 2A	0.516	-8.963	-0.034	-0.0332	-0.0181	-0.2194
1054	0.5	Extremo 2A	0.516	-1.322	-0.034	-0.0332	-0.0012	2.3518
1054	1	Extremo 2A	0.516	6.318	-0.034	-0.0332	0.0158	1.1028
1055	0	Extremo 1A	3.226	-9.461	-0.105	0.0768	-0.0532	1.7737
1055	0.5	Extremo 1A	3.226	-1.82	-0.105	0.0768	-0.00085	4.5938
1055	1	Extremo 1A	3.226	5.821	-0.105	0.0768	0.0515	3.5937
1055	0	Extremo 2A	0.383	-8.702	-0.025	0.0091	-0.0135	0.9808
1055	0.5	Extremo 2A	0.383	-1.062	-0.025	0.0091	-0.00085	3.4219
1055	1	Extremo 2A	0.383	6.579	-0.025	0.0091	0.0118	2.0426
1056	0	Extremo 1A	2.798	-8.713	-0.124	0.0138	-0.0625	3.2588
1056	0.5	Extremo 1A	2.798	-1.073	-0.124	0.0138	-0.00067	5.7053
1056	1	Extremo 1A	2.798	6.568	-0.124	0.0138	0.0612	4.3315
1056	0	Extremo 2A	0.283	-8.347	-0.019	0.0123	-0.01	1.8966
1056	0.5	Extremo 2A	0.283	-0.707	-0.019	0.0123	-0.00062	4.1601
1056	1	Extremo 2A	0.283	6.934	-0.019	0.0123	0.0088	2.6033
1057	0	Extremo 1A	2.396	-7.88	-0.131	-0.0166	-0.0676	4.2906
1057	0.5	Extremo 1A	2.396	-0.239	-0.131	-0.0166	-0.002	6.3205
1057	1	Extremo 1A	2.396	7.401	-0.131	-0.0166	0.0636	4.5301
1057	0	Extremo 2A	0.21	-7.95	-0.014	-0.0029	-0.0075	2.5331
1057	0.5	Extremo 2A	0.21	-0.31	-0.014	-0.0029	-0.00046	4.598
1057	1	Extremo 2A	0.21	7.331	-0.014	-0.0029	0.0065	2.8427
1058	0	Extremo 1A	1.991	-7.046	-0.125	-0.0472	-0.0659	4.6694
1058	0.5	Extremo 1A	1.991	0.594	-0.125	-0.0472	-0.0033	6.2824
1058	1	Extremo 1A	1.991	8.235	-0.125	-0.0472	0.0593	4.0752
1058	0	Extremo 2A	0.155	-7.541	-0.011	-0.0229	-0.0056	2.8866
1058	0.5	Extremo 2A	0.155	0.1	-0.011	-0.0229	-0.00033	4.7467
1058	1	Extremo 2A	0.155	7.741	-0.011	-0.0229	0.0049	2.7864
1059	0	Extremo 1A	1.553	-6.296	-0.108	-0.1125	-0.057	4.508
1059	0.5	Extremo 1A	1.553	1.344	-0.108	-0.1125	-0.0031	5.746
1059	1	Extremo 1A	1.553	8.985	-0.108	-0.1125	0.0508	3.1637
1059	0	Extremo 2A	0.113	-7.142	-0.00801	-0.0371	-0.0042	2.9414
1059	0.5	Extremo 2A	0.113	0.499	-0.00801	-0.0371	-0.00024	4.6022
1059	1	Extremo 2A	0.113	8.139	-0.00801	-0.0371	0.0038	2.4427
1060	0	Extremo 1A	1.149	-5.777	-0.087	-0.162	-0.0459	3.9266
1060	0.5	Extremo 1A	1.149	1.863	-0.087	-0.162	-0.0025	4.9051
1060	1	Extremo 1A	1.149	9.504	-0.087	-0.162	0.041	2.0633
1060	0	Extremo 2A	0.081	-6.785	-0.00619	-0.0384	-0.0033	2.6681
1060	0.5	Extremo 2A	0.081	0.855	-0.00619	-0.0384	-0.00017	4.1506
1060	1	Extremo 2A	0.081	8.496	-0.00619	-0.0384	0.0029	1.8128
1061	0	Extremo 1A	0.808	-5.501	-0.069	-0.1718	-0.0364	2.9541
1061	0.5	Extremo 1A	0.808	2.14	-0.069	-0.1718	-0.0018	3.7943
1061	1	Extremo 1A	0.808	9.78	-0.069	-0.1718	0.0328	0.8143
1061	0	Extremo 2A	0.057	-6.508	-0.00491	-0.0359	-0.0026	2.0451
1061	0.5	Extremo 2A	0.057	1.132	-0.00491	-0.0359	-0.00012	3.3891
1061	1	Extremo 2A	0.057	8.773	-0.00491	-0.0359	0.0023	0.9128
1062	0	Extremo 1A	0.525	-5.431	-0.056	-0.2037	-0.0293	1.6876
1062	0.5	Extremo 1A	0.525	2.21	-0.056	-0.2037	-0.0011	2.4928
1062	1	Extremo 1A	0.525	9.851	-0.056	-0.2037	0.0271	-0.5223
1062	0	Extremo 2A	0.037	-6.303	-0.00403	-0.0823	-0.0021	1.1623
1062	0.5	Extremo 2A	0.037	1.337	-0.00403	-0.0823	-6.6E-05	2.4038
1062	1	Extremo 2A	0.037	8.978	-0.00403	-0.0823	0.0019	-0.175
1063	0	Extremo 1A	0.286	-5.351	-0.047	-0.3576	-0.024	0.5624
1063	0.5	Extremo 1A	0.286	2.289	-0.047	-0.3576	-0.00024	1.328
1063	1	Extremo 1A	0.286	9.93	-0.047	-0.3576	0.0235	-1.7268
1063	0	Extremo 2A	0.02	-5.986	-0.0034	-0.2539	-0.0017	0.3908
1063	0.5	Extremo 2A	0.02	1.655	-0.0034	-0.2539	-7.8E-06	1.4735
1063	1	Extremo 2A	0.02	9.295	-0.0034	-0.2539	0.0017	-1.264
1064	0	Extremo 1A	0.09	-4.77	-0.036	-0.5749	-0.0172	0.1777
1064	0.5	Extremo 1A	0.09	2.871	-0.036	-0.5749	0.00089	0.6524
1064	1	Extremo 1A	0.09	10.511	-0.036	-0.5749	0.019	-2.6931
1064	0	Extremo 2A	0.00598	-5.094	-0.00255	-0.4922	-0.0012	0.203
1064	0.5	Extremo 2A	0.00598	2.547	-0.00255	-0.4922	6.9E-05	0.8398
1064	1	Extremo 2A	0.00598	10.187	-0.00255	-0.4922	0.0013	-2.3437
1065	0	Extremo 1A	-0.113	-9.799	0.049	-0.4529	0.0255	-2.0697
1065	0.5	Extremo 1A	-0.113	-2.159	0.049	-0.4529	0.001	0.9197
1065	1	Extremo 1A	-0.113	5.482	0.049	-0.4529	-0.0235	0.0888
1065	0	Extremo 2A	-0.113	-9.799	0.049	-0.4529	0.0255	-2.0697
1065	0.5	Extremo 2A	-0.113	-2.159	0.049	-0.4529	0.001	0.9197
1065	1	Extremo 2A	-0.113	5.482	0.049	-0.4529	-0.0235	0.0888
1066	0	Extremo 1A	-0.346	-8.601	0.052	-0.2384	0.0254	-1.1886
1066	0.5	Extremo 1A	-0.346	-0.96	0.052	-0.2384	-0.00088	1.2018
1066	1	Extremo 1A	-0.346	6.68	0.052	-0.2384	-0.0271	-0.2282
1066	0	Extremo 2A	-0.346	-8.601	0.052	-0.2384	0.0254	-1.1886
1066	0.5	Extremo 2A	-0.346	-0.96	0.052	-0.2384	-0.00088	1.2018
1066	1	Extremo 2A	-0.346	6.68	0.052	-0.2384	-0.0271	-0.2282
1067	0	Extremo 1A	-0.565	-8.054	0.043	-0.0808	0.0195	-0.7051
1067	0.5	Extremo 1A	-0.565	-0.413	0.043	-0.0808	-0.002	1.4116
1067	1	Extremo 1A	-0.565	7.227	0.043	-0.0808	-0.0235	-0.292
1067	0	Extremo 2A	-0.565	-8.054	0.043	-0.0808	0.0195	-0.7051
1067	0.5	Extremo 2A	-0.565	-0.413	0.043	-0.0808	-0.002	1.4116
1067	1	Extremo 2A	-0.565	7.227	0.043	-0.0808	-0.0235	-0.292
1068	0	Extremo 1A	-0.738	-7.748	0.034	-0.0225	0.0143	-0.4032
1068	0.5	Extremo 1A	-0.738	-0.108	0.034	-0.0225	-0.0025	1.5609
1068	1	Extremo 1A	-0.738	7.533	0.034	-0.0225	-0.0194	-0.2953
1068	0	Extremo 2A	-0.738	-7.748	0.034	-0.0225	0.0143	-0.4032
1068	0.5	Extremo 2A	-0.738	-0.108	0.034	-0.0225	-0.0025	1.5609
1068	1	Extremo 2A	-0.738	7.533	0.034	-0.0225	-0.0194	-0.2953
1069	0	Extremo 1A	-0.873	-7.521	0.027	-0.0259	0.0105	-0.3382
1069	0.5	Extremo 1A	-0.873	0.119	0.027	-0.0259	-0.0029	1.5124
1069	1	Extremo 1A	-0.873	7.76	0.027	-0.0259	-0.0162	-0.4574
1069	0	Extremo 2A	-0.873	-7.521	0.027	-0.0259	0.0105	-0.3382
1069	0.5	Extremo 2A	-0.873	0.119	0.027	-0.0259	-0.0029	1.5124
1069	1	Extremo 2A	-0.873	7.76	0.027	-0.0259	-0.0162	-0.4574
1070	0	Extremo 1A	-0.98	-7.342	0.021	-0.0622	0.0074	-0.5689
1070	0.5	Extremo 1A	-0.98	0.299	0.021	-0.0622	-0.0031	1.1919
1070	1	Extremo 1A	-0.98	7.939	0.021	-0.0622	-0.0137	-0.8677
1070	0	Extremo 2A	-0.98	-7.342	0.021	-0.0622	0.0074	-0.5689
1070	0.5	Extremo 2A	-0.98	0.299	0.021	-0.0622	-0.0031	1.1919
1070	1	Extremo 2A	-0.98	7.939	0.021	-0.0622	-0.0137	-0.8677
1071	0	Extremo 1A	-1.065	-7.248	0.017	-0.1244	0.0049	-1.1449
1071	0.5	Extremo 1A	-1.065	0.393	0.017	-0.1244	-0.0033	0.5687
1071	1	Extremo 1A	-1.065	8.034	0.017	-0.1244	-0.0116	-1.5379
1071	0	Extremo 2A	-1.065	-7.248	0.017	-0.1244	0.0049	-1.1449
1071	0.5	Extremo 2A	-1.065	0.393	0.017	-0.1244	-0.0033	0.5687
1071	1	Extremo 2A	-1.065	8.034	0.017	-0.1244	-0.0116	-1.5379
1072	0	Extremo 1A	-1.132	-7.302	0.013	-0.1944	0.0029	-2.0838
1072	0.5	Extremo 1A	-1.132	0.338	0.013	-0.1944	-0.0035	-0.3428
1072	1	Extremo 1A	-1.132	7.979	0.013	-0.1944	-0.01	-2.4222
1072	0	Extremo 2A	-1.132	-7.302	0.013	-0.1944	0.0029	-2.0838
1072	0.5	Extremo 2A	-1.132	0.338	0.013	-0.1944	-0.0035	-0.3428
1072	1	Extremo 2A	-1.132	7.979	0.013	-0.1944	-0.01	-2.4222
1073	0	Extremo 1A	-1.185	-7.512	0.00986	-0.202	0.0013	-3.2267
1073	0.5	Extremo 1A	-1.185	0.129	0.00986	-0.202	-0.0037	-1.3809
1073	1	Extremo 1A	-1.185	7.769	0.00986	-0.202	-0.0086	-3.3553
1073	0	Extremo 2A	-1.185	-7.512	0.00986	-0.202	0.0013	-3.2267
1073	0.5	Extremo 2A	-1.185	0.129	0.00986	-0.202	-0.0037	-1.3809
1073	1	Extremo 2A	-1.185	7.769	0.00986	-0.202	-0.0086	-3.3553
1074	0	Extremo 1A	-1.225	-7.687	0.00746	-0.0652	-6.1E-05	-4.03
1074	0.5	Extremo 1A	-1.225	-0.047	0.00746	-0.0652	-0.0038	-2.0965
1074	1	Extremo 1A	-1.225	7.594	0.00746	-0.0652	-0.0075	-3.9833
1074	0	Extremo 2A	-1.225	-7.687	0.00746	-0.0652	-6.1E-05	-4.03
1074	0.5	Extremo 2A	-1.225	-0.047	0.00746	-0.0652	-0.0038	-2.0965
1074	1	Extremo 2A	-1.225	7.594	0.00746	-0.0652	-0.0075	-3.9833
1075	0	Extremo 1A	-1.256	-7.666	0.00557	0.1228	-0.0011	-3.8729
1075	0.5	Extremo 1A	-1.256	-0.025	0.00557	0.1228	-0.0039	-1.95
1075	1	Extremo 1A	-1.256	7.615	0.00557	0.1228	-0.0067	-3.8475
1075	0	Extremo 2A	-1.256	-7.666	0.00557	0.1228	-0.0011	-3.8729
1075	0.5	Extremo 2A	-1.256	-0.025	0.00557	0.1228	-0.0039	-1.95
1075	1	Extremo 2A	-1.256	7.615	0.00557	0.1228	-0.0067	-3.8475
1076	0	Extremo 1A	-1.28	-7.848	0.00412	0.2577	-0.0019	-2.9558
1076	0.5	Extremo 1A	-1.28	-0.207	0.00412	0.2577	-0.0039	-0.942
1076	1	Extremo 1A	-1.28	7.433	0.00412	0.2577	-0.006	-2.7485
1076	0	Extremo 2A	-1.28	-7.848	0.00412	0.2577	-0.0019	-2.9558
1076	0.5	Extremo 2A	-1.28	-0.207	0.00412	0.2577	-0.0039	-0.942
1076	1	Extremo 2A	-1.28	7.433	0.00412	0.2577	-0.006	-2.7485
1077	0	Extremo 1A	-1.297	-8.071	0.00301	0.2464	-0.0025	-1.7385
1077	0.5	Extremo 1A	-1.297	-0.431	0.00301	0.2464	-0.004	0.387
1077	1	Extremo 1A	-1.297	7.21	0.00301	0.2464	-0.0055	-1.3078
1077	0	Extremo 2A	-1.297	-8.071	0.00301	0.2464	-0.0025	-1.7385

1077	0.5	Extremo 2A	-1.297	-0.431	0.00301	0.2464	-0.004	0.387
1077	1	Extremo 2A	-1.297	7.21	0.00301	0.2464	-0.0055	-1.3078
1078	0	Extremo 1A	-1.31	-8.147	0.00217	0.1713	-0.003	-0.5752
1078	0.5	Extremo 1A	-1.31	-0.506	0.00217	0.1713	-0.004	1.5879
1078	1	Extremo 1A	-1.31	7.135	0.00217	0.1713	-0.0051	-0.0693
1078	0	Extremo 2A	-1.31	-8.147	0.00217	0.1713	-0.003	-0.5752
1078	0.5	Extremo 2A	-1.31	-0.506	0.00217	0.1713	-0.004	1.5879
1078	1	Extremo 2A	-1.31	7.135	0.00217	0.1713	-0.0051	-0.0693
1079	0	Extremo 1A	-1.319	-8.08	0.00155	0.1025	-0.0033	0.3699
1079	0.5	Extremo 1A	-1.319	-0.439	0.00155	0.1025	-0.0041	2.4997
1079	1	Extremo 1A	-1.319	7.201	0.00155	0.1025	-0.0048	0.8091
1079	0	Extremo 2A	-1.319	-8.08	0.00155	0.1025	-0.0033	0.3699
1079	0.5	Extremo 2A	-1.319	-0.439	0.00155	0.1025	-0.0041	2.4997
1079	1	Extremo 2A	-1.319	7.201	0.00155	0.1025	-0.0048	0.8091
1080	0	Extremo 1A	-1.326	-7.933	0.00109	0.0556	-0.0036	1.0524
1080	0.5	Extremo 1A	-1.326	-0.292	0.00109	0.0556	-0.0041	3.1085
1080	1	Extremo 1A	-1.326	7.349	0.00109	0.0556	-0.0046	1.3444
1080	0	Extremo 2A	-1.326	-7.933	0.00109	0.0556	-0.0036	1.0524
1080	0.5	Extremo 2A	-1.326	-0.292	0.00109	0.0556	-0.0041	3.1085
1080	1	Extremo 2A	-1.326	7.349	0.00109	0.0556	-0.0046	1.3444
1081	0	Extremo 1A	-1.331	-7.751	0.00075	0.0237	-0.0037	1.4667
1081	0.5	Extremo 1A	-1.331	-0.11	0.00075	0.0237	-0.0041	3.4319
1081	1	Extremo 1A	-1.331	7.531	0.00075	0.0237	-0.0045	1.5768
1081	0	Extremo 2A	-1.331	-7.751	0.00075	0.0237	-0.0037	1.4667
1081	0.5	Extremo 2A	-1.331	-0.11	0.00075	0.0237	-0.0041	3.4319
1081	1	Extremo 2A	-1.331	7.531	0.00075	0.0237	-0.0045	1.5768
1082	0	Extremo 1A	-1.334	-7.557	0.00051	-0.0019	-0.0039	1.6139
1082	0.5	Extremo 1A	-1.334	0.084	0.00051	-0.0019	-0.0041	3.4822
1082	1	Extremo 1A	-1.334	7.724	0.00051	-0.0019	-0.0044	1.5302
1082	0	Extremo 2A	-1.334	-7.557	0.00051	-0.0019	-0.0039	1.6138
1082	0.5	Extremo 2A	-1.334	0.084	0.00051	-0.0019	-0.0041	3.4822
1082	1	Extremo 2A	-1.334	7.724	0.00051	-0.0019	-0.0044	1.5302
1083	0	Extremo 1A	-1.336	-7.363	0.00034	-0.0275	-0.004	1.4916
1083	0.5	Extremo 1A	-1.336	0.278	0.00034	-0.0275	-0.0041	3.2628
1083	1	Extremo 1A	-1.336	7.918	0.00034	-0.0275	-0.0043	1.2137
1083	0	Extremo 2A	-1.336	-7.363	0.00034	-0.0275	-0.004	1.4916
1083	0.5	Extremo 2A	-1.336	0.278	0.00034	-0.0275	-0.0041	3.2628
1083	1	Extremo 2A	-1.336	7.918	0.00034	-0.0275	-0.0043	1.2137
1084	0	Extremo 1A	-1.338	-7.181	0.00022	-0.0602	-0.004	1.0895
1084	0.5	Extremo 1A	-1.338	0.46	0.00022	-0.0602	-0.0041	2.7697
1084	1	Extremo 1A	-1.338	8.101	0.00022	-0.0602	-0.0043	0.6295
1084	0	Extremo 2A	-1.338	-7.181	0.00022	-0.0602	-0.004	1.0895
1084	0.5	Extremo 2A	-1.338	0.46	0.00022	-0.0602	-0.0041	2.7697
1084	1	Extremo 2A	-1.338	8.101	0.00022	-0.0602	-0.0043	0.6295
1085	0	Extremo 1A	-1.339	-7.037	0.00013	-0.1098	-0.0041	0.3804
1085	0.5	Extremo 1A	-1.339	0.604	0.00013	-0.1098	-0.0041	1.9887
1085	1	Extremo 1A	-1.339	8.244	0.00013	-0.1098	-0.0042	-0.2232
1085	0	Extremo 2A	-1.339	-7.037	0.00013	-0.1098	-0.0041	0.3804
1085	0.5	Extremo 2A	-1.339	0.604	0.00013	-0.1098	-0.0041	1.9887
1085	1	Extremo 2A	-1.339	8.244	0.00013	-0.1098	-0.0042	-0.2232
1086	0	Extremo 1A	-1.34	-6.985	7.6E-05	-0.1844	-0.0041	-0.6821
1086	0.5	Extremo 1A	-1.34	0.656	7.6E-05	-0.1844	-0.0042	0.9002
1086	1	Extremo 1A	-1.34	8.296	7.6E-05	-0.1844	-0.0042	-1.3379
1086	0	Extremo 2A	-1.34	-6.985	7.6E-05	-0.1844	-0.0041	-0.6821
1086	0.5	Extremo 2A	-1.34	0.656	7.6E-05	-0.1844	-0.0042	0.9002
1086	1	Extremo 2A	-1.34	8.296	7.6E-05	-0.1844	-0.0042	-1.3379
1087	0	Extremo 1A	-1.34	-7.096	3.7E-05	-0.266	-0.0041	-2.1176
1087	0.5	Extremo 1A	-1.34	0.545	3.7E-05	-0.266	-0.0042	-0.4798
1087	1	Extremo 1A	-1.34	8.185	3.7E-05	-0.266	-0.0042	-2.6623
1087	0	Extremo 2A	-1.34	-7.096	3.7E-05	-0.266	-0.0041	-2.1176
1087	0.5	Extremo 2A	-1.34	0.545	3.7E-05	-0.266	-0.0042	-0.4798
1087	1	Extremo 2A	-1.34	8.185	3.7E-05	-0.266	-0.0042	-2.6623
1088	0	Extremo 1A	-1.341	-7.378	1.2E-05	-0.2737	-0.0041	-3.7436
1088	0.5	Extremo 1A	-1.341	0.263	1.2E-05	-0.2737	-0.0042	-1.9649
1088	1	Extremo 1A	-1.341	7.903	1.2E-05	-0.2737	-0.0042	-4.0064
1088	0	Extremo 2A	-1.341	-7.378	1.2E-05	-0.2737	-0.0041	-3.7436
1088	0.5	Extremo 2A	-1.341	0.263	1.2E-05	-0.2737	-0.0042	-1.9649
1088	1	Extremo 2A	-1.341	7.903	1.2E-05	-0.2737	-0.0042	-4.0064
1089	0	Extremo 1A	-1.341	-7.613	-3.2E-06	-0.1127	-0.0042	-4.9319
1089	0.5	Extremo 1A	-1.341	0.028	-3.2E-06	-0.1127	-0.0042	-3.0357
1089	1	Extremo 1A	-1.341	7.669	-3.2E-06	-0.1127	-0.0042	-4.9598
1089	0	Extremo 2A	-1.341	-7.613	-3.2E-06	-0.1127	-0.0042	-4.9319
1089	0.5	Extremo 2A	-1.341	0.028	-3.2E-06	-0.1127	-0.0042	-3.0357
1089	1	Extremo 2A	-1.341	7.669	-3.2E-06	-0.1127	-0.0042	-4.9599
1090	0	Extremo 1A	-1.341	-7.615	-1.2E-05	0.1091	-0.0042	-4.9648
1090	0.5	Extremo 1A	-1.341	0.026	-1.2E-05	0.1091	-0.0042	-3.0674
1090	1	Extremo 1A	-1.341	7.666	-1.2E-05	0.1091	-0.0042	-4.9904
1090	0	Extremo 2A	-1.341	-7.615	-1.2E-05	0.1091	-0.0042	-4.9648
1090	0.5	Extremo 2A	-1.341	0.026	-1.2E-05	0.1091	-0.0042	-3.0674
1090	1	Extremo 2A	-1.341	7.666	-1.2E-05	0.1091	-0.0042	-4.9904
1091	0	Extremo 1A	-1.341	-7.85	-1.7E-05	0.2701	-0.0042	-4.0746
1091	0.5	Extremo 1A	-1.341	-0.209	-1.7E-05	0.2701	-0.0042	-2.0599
1091	1	Extremo 1A	-1.341	7.431	-1.7E-05	0.2701	-0.0041	-3.8655
1091	0	Extremo 2A	-1.341	-7.85	-1.7E-05	0.2701	-0.0042	-4.0746
1091	0.5	Extremo 2A	-1.341	-0.209	-1.7E-05	0.2701	-0.0042	-2.0599
1091	1	Extremo 2A	-1.341	7.431	-1.7E-05	0.2701	-0.0041	-3.8655
1092	0	Extremo 1A	-1.341	-8.131	-1.9E-05	0.2625	-0.0042	-2.7937
1092	0.5	Extremo 1A	-1.341	-0.491	-1.9E-05	0.2625	-0.0042	-0.6381
1092	1	Extremo 1A	-1.341	7.15	-1.9E-05	0.2625	-0.0041	-2.3029
1092	0	Extremo 2A	-1.341	-8.131	-1.9E-05	0.2625	-0.0042	-2.7937
1092	0.5	Extremo 2A	-1.341	-0.491	-1.9E-05	0.2625	-0.0042	-0.6381
1092	1	Extremo 2A	-1.341	7.15	-1.9E-05	0.2625	-0.0041	-2.3029
1093	0	Extremo 1A	-1.341	-8.242	-1.9E-05	0.181	-0.0042	-1.5324
1093	0.5	Extremo 1A	-1.341	-0.602	-1.9E-05	0.181	-0.0042	0.6786
1093	1	Extremo 1A	-1.341	7.039	-1.9E-05	0.181	-0.0041	-0.9308
1093	0	Extremo 2A	-1.341	-8.242	-1.9E-05	0.181	-0.0042	-1.5324
1093	0.5	Extremo 2A	-1.341	-0.602	-1.9E-05	0.181	-0.0042	0.6786
1093	1	Extremo 2A	-1.341	7.039	-1.9E-05	0.181	-0.0041	-0.9308
1094	0	Extremo 1A	-1.341	-8.189	-1.8E-05	0.1067	-0.0042	-0.4805
1094	0.5	Extremo 1A	-1.341	-0.549	-1.8E-05	0.1067	-0.0042	1.704
1094	1	Extremo 1A	-1.341	7.092	-1.8E-05	0.1067	-0.0042	0.0681
1094	0	Extremo 2A	-1.341	-8.189	-1.8E-05	0.1067	-0.0042	-0.4805
1094	0.5	Extremo 2A	-1.341	-0.549	-1.8E-05	0.1067	-0.0042	1.704
1094	1	Extremo 2A	-1.341	7.092	-1.8E-05	0.1067	-0.0042	0.0681
1095	0	Extremo 1A	-1.341	-8.045	-1.7E-05	0.0574	-0.0042	0.3098
1095	0.5	Extremo 1A	-1.341	-0.404	-1.7E-05	0.0574	-0.0042	2.422
1095	1	Extremo 1A	-1.341	7.237	-1.7E-05	0.0574	-0.0042	0.7138
1095	0	Extremo 2A	-1.341	-8.045	-1.7E-05	0.0574	-0.0042	0.3098
1095	0.5	Extremo 2A	-1.341	-0.404	-1.7E-05	0.0574	-0.0042	2.422
1095	1	Extremo 2A	-1.341	7.237	-1.7E-05	0.0574	-0.0042	0.7138
1096	0	Extremo 1A	-1.341	-7.861	-1.5E-05	0.0252	-0.0042	0.8323
1096	0.5	Extremo 1A	-1.341	-0.22	-1.5E-05	0.0252	-0.0042	2.8525
1096	1	Extremo 1A	-1.341	7.42	-1.5E-05	0.0252	-0.0042	1.0525
1096	0	Extremo 2A	-1.341	-7.861	-1.5E-05	0.0252	-0.0042	0.8323
1096	0.5	Extremo 2A	-1.341	-0.22	-1.5E-05	0.0252	-0.0042	2.8526
1096	1	Extremo 2A	-1.341	7.42	-1.5E-05	0.0252	-0.0042	1.0525
1097	0	Extremo 1A	-1.341	-7.664	-1.3E-05	0.00022	-0.0042	1.0877
1097	0.5	Extremo 1A	-1.341	-0.024	-1.3E-05	0.00022	-0.0042	3.0097
1097	1	Extremo 1A	-1.341	7.617	-1.3E-05	0.00022	-0.0042	1.1114
1097	0	Extremo 2A	-1.341	-7.664	-1.3E-05	0.00022	-0.0042	1.0877
1097	0.5	Extremo 2A	-1.341	-0.024	-1.3E-05	0.00022	-0.0042	3.0097
1097	1	Extremo 2A	-1.341	7.617	-1.3E-05	0.00022	-0.0042	1.1114
1098	0	Extremo 1A	-1.341	-7.468	-1.1E-05	-0.0247	-0.0042	1.0741
1098	0.5	Extremo 1A	-1.341	0.173	-1.1E-05	-0.0247	-0.0042	2.8977
1098	1	Extremo 1A	-1.341	7.814	-1.1E-05	-0.0247	-0.0042	0.9011
1098	0	Extremo 2A	-1.341	-7.468	-1.1E-05	-0.0247	-0.0042	1.0741
1098	0.5	Extremo 2A	-1.341	0.173	-1.1E-05	-0.0247	-0.0042	2.8977
1098	1	Extremo 2A	-1.341	7.814	-1.1E-05	-0.0247	-0.0042	0.9011
1099	0	Extremo 1A	-1.34	-7.283	-9.5E-06	-0.0563	-0.0042	0.7814
1099	0.5	Extremo 1A	-1.34	0.358	-9.5E-06	-0.0563	-0.0042	2.5127
1099	1	Extremo 1A	-1.34	7.998	-9.5E-06	-0.0563	-0.0042	0.4237
1099	0	Extremo 2A	-1.34	-7.283	-9.5E-06	-0.0563	-0.0042	0.7814
1099	0.5	Extremo 2A	-1.34	0.358	-9.5E-06	-0.0563	-0.0042	2.5127
1099	1	Extremo 2A	-1.34	7.998	-9.5E-06	-0.0563	-0.0042	0.4237
1100	0	Extremo 1A	-1.34	-7.136	-8E-06	-0.1044	-0.0042	0.1834
1100	0.5	Extremo 1A	-1.34	0.505	-8E-06	-0.1044	-0.0042	1.8411
1100	1	Extremo 1A	-1.34	8.146	-8E-06	-0.1044	-0.0042	-0.3215
1100	0	Extremo 2A	-1.34	-7.136	-8E-06	-0.1044	-0.0042	0.1834
1100	0.5	Extremo 2A	-1.34	0.505	-8E-06	-0.1044	-0.0042	1.8412
1100	1	Extremo 2A	-1.34	8.146	-8E-06	-0.1044	-0.0042	-0.3215
1101	0	Extremo 1A	-1.34	-7.077	-6.7E-06	-0.1764	-0.0042	-0.7642
1101	0.5	Extremo 1A	-1.34	0.564	-6.7E-06	-0.1764	-0.0042	0.8639
1101	1	Extremo 1A	-1.34	8.205	-6.7E-06	-0.1764	-0.0042	-1.3283
1101	0	Extremo 2A	-1.34	-7.077	-6.7E-06	-0.1764	-0.0042	-0.7642

1101	0.5	Extremo 2A	-1.34	0.564	-6.7E-06	-0.1764	-0.0042	0.8639
1101	1	Extremo 2A	-1.34	8.205	-6.7E-06	-0.1764	-0.0042	-1.3283
1102	0	Extremo 1A	-1.34	-7.175	-5.6E-06	-0.2552	-0.0042	-2.0804
1102	0.5	Extremo 1A	-1.34	0.466	-5.6E-06	-0.2552	-0.0042	-0.4033
1102	1	Extremo 1A	-1.34	8.107	-5.6E-06	-0.2552	-0.0042	-2.5465
1102	0	Extremo 2A	-1.34	-7.175	-5.6E-06	-0.2552	-0.0042	-2.0804
1102	0.5	Extremo 2A	-1.34	0.466	-5.6E-06	-0.2552	-0.0042	-0.4033
1102	1	Extremo 2A	-1.34	8.107	-5.6E-06	-0.2552	-0.0042	-2.5465
1103	0	Extremo 1A	-1.34	-7.437	-4.6E-06	-0.2626	-0.0042	-3.589
1103	0.5	Extremo 1A	-1.34	0.204	-4.6E-06	-0.2626	-0.0042	-1.7807
1103	1	Extremo 1A	-1.34	7.844	-4.6E-06	-0.2626	-0.0042	-3.7928
1103	0	Extremo 2A	-1.34	-7.437	-4.6E-06	-0.2626	-0.0042	-3.5889
1103	0.5	Extremo 2A	-1.34	0.204	-4.6E-06	-0.2626	-0.0042	-1.7807
1103	1	Extremo 2A	-1.34	7.844	-4.6E-06	-0.2626	-0.0042	-3.7928
1104	0	Extremo 1A	-1.34	-7.653	-3.8E-06	-0.107	-0.0042	-4.6833
1104	0.5	Extremo 1A	-1.34	-0.012	-3.8E-06	-0.107	-0.0042	-2.7669
1104	1	Extremo 1A	-1.34	7.628	-3.8E-06	-0.107	-0.0042	-4.6708
1104	0	Extremo 2A	-1.34	-7.653	-3.8E-06	-0.107	-0.0042	-4.6833
1104	0.5	Extremo 2A	-1.34	-0.012	-3.8E-06	-0.107	-0.0042	-2.7669
1104	1	Extremo 2A	-1.34	7.628	-3.8E-06	-0.107	-0.0042	-4.6708
1105	0	Extremo 1A	-1.34	-7.645	-3.1E-06	0.1073	-0.0042	-4.6708
1105	0.5	Extremo 1A	-1.34	-0.00421	-3.1E-06	0.1073	-0.0042	-2.7586
1105	1	Extremo 1A	-1.34	7.636	-3.1E-06	0.1073	-0.0042	-4.6666
1105	0	Extremo 2A	-1.34	-7.645	-3.1E-06	0.1073	-0.0042	-4.6708
1105	0.5	Extremo 2A	-1.34	-0.00421	-3.1E-06	0.1073	-0.0042	-2.7586
1105	1	Extremo 2A	-1.34	7.636	-3.1E-06	0.1073	-0.0042	-4.6666
1106	0	Extremo 1A	-1.34	-7.861	-2.5E-06	0.2629	-0.0042	-3.7761
1106	0.5	Extremo 1A	-1.34	-0.221	-2.5E-06	0.2629	-0.0042	-1.7557
1106	1	Extremo 1A	-1.34	7.42	-2.5E-06	0.2629	-0.0042	-3.5556
1106	0	Extremo 2A	-1.34	-7.861	-2.5E-06	0.2629	-0.0042	-3.7761
1106	0.5	Extremo 2A	-1.34	-0.221	-2.5E-06	0.2629	-0.0042	-1.7557
1106	1	Extremo 2A	-1.34	7.42	-2.5E-06	0.2629	-0.0042	-3.5555
1107	0	Extremo 1A	-1.34	-8.124	-2.1E-06	0.2556	-0.0042	-2.5132
1107	0.5	Extremo 1A	-1.34	-0.483	-2.1E-06	0.2556	-0.0042	-0.3616
1107	1	Extremo 1A	-1.34	7.158	-2.1E-06	0.2556	-0.0042	-2.0303
1107	0	Extremo 2A	-1.34	-8.123	-2.1E-06	0.2556	-0.0042	-2.5132
1107	0.5	Extremo 2A	-1.34	-0.483	-2.1E-06	0.2556	-0.0042	-0.3616
1107	1	Extremo 2A	-1.34	7.158	-2.1E-06	0.2556	-0.0042	-2.0303
1108	0	Extremo 1A	-1.34	-8.222	-1.7E-06	0.1767	-0.0042	-1.2783
1108	0.5	Extremo 1A	-1.34	-0.581	-1.7E-06	0.1767	-0.0042	0.9223
1108	1	Extremo 1A	-1.34	7.06	-1.7E-06	0.1767	-0.0042	-0.6974
1108	0	Extremo 2A	-1.34	-8.222	-1.7E-06	0.1767	-0.0042	-1.2783
1108	0.5	Extremo 2A	-1.34	-0.581	-1.7E-06	0.1767	-0.0042	0.9223
1108	1	Extremo 2A	-1.34	7.06	-1.7E-06	0.1767	-0.0042	-0.6974
1109	0	Extremo 1A	-1.34	-8.162	-1.4E-06	0.1046	-0.0042	-0.2548
1109	0.5	Extremo 1A	-1.34	-0.522	-1.4E-06	0.1046	-0.0042	1.9162
1109	1	Extremo 1A	-1.34	7.119	-1.4E-06	0.1046	-0.0042	0.267
1109	0	Extremo 2A	-1.34	-8.162	-1.4E-06	0.1046	-0.0042	-0.2548
1109	0.5	Extremo 2A	-1.34	-0.522	-1.4E-06	0.1046	-0.0042	1.9162
1109	1	Extremo 2A	-1.34	7.119	-1.4E-06	0.1046	-0.0042	0.267
1110	0	Extremo 1A	-1.34	-8.015	-1.1E-06	0.0566	-0.0042	0.5069
1110	0.5	Extremo 1A	-1.34	-0.375	-1.1E-06	0.0566	-0.0042	2.6044
1110	1	Extremo 1A	-1.34	7.266	-1.1E-06	0.0566	-0.0042	0.8816
1110	0	Extremo 2A	-1.34	-8.015	-1.1E-06	0.0566	-0.0042	0.5069
1110	0.5	Extremo 2A	-1.34	-0.375	-1.1E-06	0.0566	-0.0042	2.6044
1110	1	Extremo 2A	-1.34	7.266	-1.1E-06	0.0566	-0.0042	0.8816
1111	0	Extremo 1A	-1.34	-7.831	-8.8E-07	0.0249	-0.0042	1.0008
1111	0.5	Extremo 1A	-1.34	-0.19	-8.8E-07	0.0249	-0.0042	3.0061
1111	1	Extremo 1A	-1.34	7.45	-8.8E-07	0.0249	-0.0042	1.191
1111	0	Extremo 2A	-1.34	-7.831	-8.8E-07	0.0249	-0.0042	1.0008
1111	0.5	Extremo 2A	-1.34	-0.19	-8.8E-07	0.0249	-0.0042	3.0061
1111	1	Extremo 2A	-1.34	7.45	-8.8E-07	0.0249	-0.0042	1.191
1112	0	Extremo 1A	-1.34	-7.634	-7.1E-07	-5E-05	-0.0042	1.2277
1112	0.5	Extremo 1A	-1.34	0.0063	-7.1E-07	-5E-05	-0.0042	3.1347
1112	1	Extremo 1A	-1.34	7.647	-7.1E-07	-5E-05	-0.0042	1.2214
1112	0	Extremo 2A	-1.34	-7.634	-7.1E-07	-5E-05	-0.0042	1.2276
1112	0.5	Extremo 2A	-1.34	0.0063	-7.1E-07	-5E-05	-0.0042	3.1346
1112	1	Extremo 2A	-1.34	7.647	-7.1E-07	-5E-05	-0.0042	1.2213
1113	0	Extremo 1A	-1.34	-7.438	-5.7E-07	-0.025	-0.0042	1.1854
1113	0.5	Extremo 1A	-1.34	0.203	-5.7E-07	-0.025	-0.0042	2.9942
1113	1	Extremo 1A	-1.34	7.843	-5.7E-07	-0.025	-0.0042	0.9826
1113	0	Extremo 2A	-1.34	-7.438	-5.7E-07	-0.025	-0.0042	1.1854
1113	0.5	Extremo 2A	-1.34	0.203	-5.7E-07	-0.025	-0.0042	2.9941
1113	1	Extremo 2A	-1.34	7.843	-5.7E-07	-0.025	-0.0042	0.9826
1114	0	Extremo 1A	-1.34	-7.254	-4.5E-07	-0.0569	-0.0042	0.8638
1114	0.5	Extremo 1A	-1.34	0.387	-4.5E-07	-0.0569	-0.0042	2.5805
1114	1	Extremo 1A	-1.34	8.028	-4.5E-07	-0.0569	-0.0042	0.4769
1114	0	Extremo 2A	-1.34	-7.254	-4.5E-07	-0.0569	-0.0042	0.8638
1114	0.5	Extremo 2A	-1.34	0.387	-4.5E-07	-0.0569	-0.0042	2.5805
1114	1	Extremo 2A	-1.34	8.028	-4.5E-07	-0.0569	-0.0042	0.4768
1115	0	Extremo 1A	-1.34	-7.107	-3.6E-07	-0.1053	-0.0042	0.2365
1115	0.5	Extremo 1A	-1.34	0.533	-3.6E-07	-0.1053	-0.0042	1.88
1115	1	Extremo 1A	-1.34	8.174	-3.6E-07	-0.1053	-0.0042	-0.2968
1115	0	Extremo 2A	-1.34	-7.107	-3.6E-07	-0.1053	-0.0042	0.2365
1115	0.5	Extremo 2A	-1.34	0.533	-3.6E-07	-0.1053	-0.0042	1.88
1115	1	Extremo 2A	-1.34	8.174	-3.6E-07	-0.1053	-0.0042	-0.2968
1116	0	Extremo 1A	-1.34	-7.05	-2.9E-07	-0.178	-0.0042	-0.7415
1116	0.5	Extremo 1A	-1.34	0.591	-2.9E-07	-0.178	-0.0042	0.8734
1116	1	Extremo 1A	-1.34	8.231	-2.9E-07	-0.178	-0.0042	-1.3321
1116	0	Extremo 2A	-1.34	-7.05	-2.9E-07	-0.178	-0.0042	-0.7416
1116	0.5	Extremo 2A	-1.34	0.591	-2.9E-07	-0.178	-0.0042	0.8733
1116	1	Extremo 2A	-1.34	8.231	-2.9E-07	-0.178	-0.0042	-1.3321
1117	0	Extremo 1A	-1.34	-7.152	-2.3E-07	-0.2576	-0.0042	-2.0894
1117	0.5	Extremo 1A	-1.34	0.489	-2.3E-07	-0.2576	-0.0042	-0.4237
1117	1	Extremo 1A	-1.34	8.13	-2.3E-07	-0.2576	-0.0042	-2.5783
1117	0	Extremo 2A	-1.34	-7.152	-2.3E-07	-0.2576	-0.0042	-2.0894
1117	0.5	Extremo 2A	-1.34	0.489	-2.3E-07	-0.2576	-0.0042	-0.4238
1117	1	Extremo 2A	-1.34	8.13	-2.3E-07	-0.2576	-0.0042	-2.5784
1118	0	Extremo 1A	-1.34	-7.419	-1.8E-07	-0.2651	-0.0042	-3.6292
1118	0.5	Extremo 1A	-1.34	0.221	-1.8E-07	-0.2651	-0.0042	-1.8296
1118	1	Extremo 1A	-1.34	7.862	-1.8E-07	-0.2651	-0.0042	-3.8504
1118	0	Extremo 2A	-1.34	-7.419	-1.8E-07	-0.2651	-0.0042	-3.6292
1118	0.5	Extremo 2A	-1.34	0.221	-1.8E-07	-0.2651	-0.0042	-1.8297
1118	1	Extremo 2A	-1.34	7.862	-1.8E-07	-0.2651	-0.0042	-3.8505
1119	0	Extremo 1A	-1.34	-7.641	-1.5E-07	-0.1081	-0.0042	-4.7486
1119	0.5	Extremo 1A	-1.34	-0.00032	-1.5E-07	-0.1081	-0.0042	-2.8382
1119	1	Extremo 1A	-1.34	7.64	-1.5E-07	-0.1081	-0.0042	-4.7482
1119	0	Extremo 2A	-1.34	-7.641	-1.5E-07	-0.1081	-0.0042	-4.7486
1119	0.5	Extremo 2A	-1.34	-0.00032	-1.5E-07	-0.1081	-0.0042	-2.8383
1119	1	Extremo 2A	-1.34	7.64	-1.5E-07	-0.1081	-0.0042	-4.7483
1120	0	Extremo 1A	-1.34	-7.636	-1.2E-07	0.1081	-0.0042	-4.7482
1120	0.5	Extremo 1A	-1.34	0.00485	-1.2E-07	0.1081	-0.0042	-2.8405
1120	1	Extremo 1A	-1.34	7.645	-1.2E-07	0.1081	-0.0042	-4.753
1120	0	Extremo 2A	-1.34	-7.636	-1.2E-07	0.1081	-0.0042	-4.7482
1120	0.5	Extremo 2A	-1.34	0.00484	-1.2E-07	0.1081	-0.0042	-2.8405
1120	1	Extremo 2A	-1.34	7.645	-1.2E-07	0.1081	-0.0042	-4.7531
1121	0	Extremo 1A	-1.34	-7.857	-9.3E-08	0.265	-0.0042	-3.8548
1121	0.5	Extremo 1A	-1.34	-0.217	-9.3E-08	0.265	-0.0042	-1.8363
1121	1	Extremo 1A	-1.34	7.424	-9.3E-08	0.265	-0.0042	-3.6381
1121	0	Extremo 2A	-1.34	-7.857	-9.3E-08	0.265	-0.0042	-3.8548
1121	0.5	Extremo 2A	-1.34	-0.217	-9.3E-08	0.265	-0.0042	-1.8363
1121	1	Extremo 2A	-1.34	7.424	-9.3E-08	0.265	-0.0042	-3.6381
1122	0	Extremo 1A	-1.34	-8.125	-7.4E-08	0.2576	-0.0042	-2.5871
1122	0.5	Extremo 1A	-1.34	-0.484	-7.4E-08	0.2576	-0.0042	-0.4348
1122	1	Extremo 1A	-1.34	7.156	-7.4E-08	0.2576	-0.0042	-2.1027
1122	0	Extremo 2A	-1.34	-8.125	-7.4E-08	0.2576	-0.0042	-2.5871
1122	0.5	Extremo 2A	-1.34	-0.484	-7.4E-08	0.2576	-0.0042	-0.4348
1122	1	Extremo 2A	-1.34	7.156	-7.4E-08	0.2576	-0.0042	-2.1027
1123	0	Extremo 1A	-1.34	-8.227	-5.9E-08	0.178	-0.0042	-1.3453
1123	0.5	Extremo 1A	-1.34	-0.586	-5.9E-08	0.178	-0.0042	0.8579
1123	1	Extremo 1A	-1.34	7.055	-5.9E-08	0.178	-0.0042	-0.7593
1123	0	Extremo 2A	-1.34	-8.227	-5.9E-08	0.178	-0.0042	-1.3453
1123	0.5	Extremo 2A	-1.34	-0.586	-5.9E-08	0.178	-0.0042	0.8579
1123	1	Extremo 2A	-1.34	7.055	-5.9E-08	0.178	-0.0042	-0.7593
1124	0	Extremo 1A	-1.34	-8.169	-4.7E-08	0.1052	-0.0042	-0.3144
1124	0.5	Extremo 1A	-1.34	-0.529	-4.7E-08	0.1052	-0.0042	1.8601
1124	1	Extremo 1A	-1.34	7.112	-4.7E-08	0.1052	-0.0042	0.2143
1124	0	Extremo 2A	-1.34	-8.169	-4.7E-08	0.1052	-0.0042	-0.3144
1124	0.5	Extremo 2A	-1.34	-0.529	-4.7E-08	0.1052	-0.0042	1.8602
1124	1	Extremo 2A	-1.34	7.112	-4.7E-08	0.1052	-0.0042	0.2144
1125	0	Extremo 1A	-1.34	-8.023	-3.7E-08	0.0568	-0.0042	0.4549
1125	0.5	Extremo 1A	-1.34	-0.382	-3.7E-08	0.0568	-0.0042	2.5562
1125	1	Extremo 1A	-1.34	7.258	-3.7E-08	0.0568	-0.0042	0.8372
1125	0	Extremo 2A	-1.34	-8.023	-3.7E-08	0.0568	-0.0042	0.4549

1125	0.5	Extremo 2A	-1.34	-0.382	-3.7E-08	0.0568	-0.0042	2.5563
1125	1	Extremo 2A	-1.34	7.258	-3.7E-08	0.0568	-0.0042	0.8373
1126	0	Extremo 1A	-1.34	-7.839	-2.9E-08	0.025	-0.0042	0.9563
1126	0.5	Extremo 1A	-1.34	-0.198	-2.9E-08	0.025	-0.0042	2.9655
1126	1	Extremo 1A	-1.34	7.443	-2.9E-08	0.025	-0.0042	1.1544
1126	0	Extremo 2A	-1.34	-7.839	-2.9E-08	0.025	-0.0042	0.9563
1126	0.5	Extremo 2A	-1.34	-0.198	-2.9E-08	0.025	-0.0042	2.9655
1126	1	Extremo 2A	-1.34	7.442	-2.9E-08	0.025	-0.0042	1.1545
1127	0	Extremo 1A	-1.34	-7.642	-2.3E-08	1.2E-05	-0.0042	1.1906
1127	0.5	Extremo 1A	-1.34	-0.00163	-2.3E-08	1.2E-05	-0.0042	3.1016
1127	1	Extremo 1A	-1.34	7.639	-2.3E-08	1.2E-05	-0.0042	1.1922
1127	0	Extremo 2A	-1.34	-7.642	-2.3E-08	1.3E-05	-0.0042	1.1907
1127	0.5	Extremo 2A	-1.34	-0.00165	-2.3E-08	1.3E-05	-0.0042	3.1017
1127	1	Extremo 2A	-1.34	7.639	-2.3E-08	1.3E-05	-0.0042	1.1923
1128	0	Extremo 1A	-1.34	-7.446	-1.8E-08	-0.0249	-0.0042	1.1558
1128	0.5	Extremo 1A	-1.34	0.195	-1.8E-08	-0.0249	-0.0042	2.9685
1128	1	Extremo 1A	-1.34	7.835	-1.8E-08	-0.0249	-0.0042	0.9609
1128	0	Extremo 2A	-1.34	-7.446	-1.8E-08	-0.0249	-0.0042	1.1559
1128	0.5	Extremo 2A	-1.34	0.195	-1.8E-08	-0.0249	-0.0042	2.9687
1128	1	Extremo 2A	-1.34	7.835	-1.8E-08	-0.0249	-0.0042	0.9611
1129	0	Extremo 1A	-1.34	-7.261	-1.4E-08	-0.0568	-0.0042	0.8418
1129	0.5	Extremo 1A	-1.34	0.379	-1.4E-08	-0.0568	-0.0042	2.5624
1129	1	Extremo 1A	-1.34	8.02	-1.4E-08	-0.0568	-0.0042	0.4626
1129	0	Extremo 2A	-1.34	-7.261	-1.4E-08	-0.0568	-0.0042	0.8419
1129	0.5	Extremo 2A	-1.34	0.379	-1.4E-08	-0.0568	-0.0042	2.5625
1129	1	Extremo 2A	-1.34	8.02	-1.4E-08	-0.0568	-0.0042	0.4628
1130	0	Extremo 1A	-1.34	-7.115	-1.1E-08	-0.1051	-0.0042	0.2222
1130	0.5	Extremo 1A	-1.34	0.526	-1.1E-08	-0.1051	-0.0042	1.8695
1130	1	Extremo 1A	-1.34	8.166	-1.1E-08	-0.1051	-0.0042	-0.3036
1130	0	Extremo 2A	-1.34	-7.115	-1.1E-08	-0.1051	-0.0042	0.2224
1130	0.5	Extremo 2A	-1.34	0.526	-1.1E-08	-0.1051	-0.0042	1.8696
1130	1	Extremo 2A	-1.34	8.166	-1.1E-08	-0.1051	-0.0042	-0.3034
1131	0	Extremo 1A	-1.34	-7.057	-9E-09	-0.1776	-0.0042	-0.7479
1131	0.5	Extremo 1A	-1.34	0.584	-9E-09	-0.1776	-0.0042	0.8705
1131	1	Extremo 1A	-1.34	8.224	-9E-09	-0.1776	-0.0042	-1.3314
1131	0	Extremo 2A	-1.34	-7.057	-9E-09	-0.1776	-0.0042	-0.7477
1131	0.5	Extremo 2A	-1.34	0.584	-9E-09	-0.1776	-0.0042	0.8707
1131	1	Extremo 2A	-1.34	8.224	-9E-09	-0.1776	-0.0042	-1.3312
1132	0	Extremo 1A	-1.34	-7.158	-7.1E-09	-0.257	-0.0042	-2.0874
1132	0.5	Extremo 1A	-1.34	0.483	-7.1E-09	-0.257	-0.0042	-0.4187
1132	1	Extremo 1A	-1.34	8.123	-7.1E-09	-0.257	-0.0042	-2.5703
1132	0	Extremo 2A	-1.34	-7.158	-7.1E-09	-0.257	-0.0042	-2.0872
1132	0.5	Extremo 2A	-1.34	0.483	-7.1E-09	-0.257	-0.0042	-0.4185
1132	1	Extremo 2A	-1.34	8.123	-7.1E-09	-0.257	-0.0042	-2.5701
1133	0	Extremo 1A	-1.34	-7.424	-5.6E-09	-0.2644	-0.0042	-3.619
1133	0.5	Extremo 1A	-1.34	0.217	-5.6E-09	-0.2644	-0.0042	-1.8172
1133	1	Extremo 1A	-1.34	7.857	-5.6E-09	-0.2644	-0.0042	-3.8356
1133	0	Extremo 2A	-1.34	-7.424	-5.6E-09	-0.2644	-0.0042	-3.6188
1133	0.5	Extremo 2A	-1.34	0.217	-5.6E-09	-0.2644	-0.0042	-1.8169
1133	1	Extremo 2A	-1.34	7.857	-5.6E-09	-0.2644	-0.0042	-3.8354
1134	0	Extremo 1A	-1.34	-7.644	-4.4E-09	-0.1078	-0.0042	-4.7318
1134	0.5	Extremo 1A	-1.34	-0.00364	-4.4E-09	-0.1078	-0.0042	-2.8199
1134	1	Extremo 1A	-1.34	7.637	-4.4E-09	-0.1078	-0.0042	-4.7282
1134	0	Extremo 2A	-1.34	-7.644	-4.4E-09	-0.1078	-0.0042	-4.7316
1134	0.5	Extremo 2A	-1.34	-0.00361	-4.4E-09	-0.1078	-0.0042	-2.8196
1134	1	Extremo 2A	-1.34	7.637	-4.4E-09	-0.1078	-0.0042	-4.728
1135	0	Extremo 1A	-1.34	-7.638	-3.5E-09	0.1079	-0.0042	-4.7282
1135	0.5	Extremo 1A	-1.34	0.00235	-3.5E-09	0.1079	-0.0042	-2.8192
1135	1	Extremo 1A	-1.34	7.643	-3.5E-09	0.1079	-0.0042	-4.7306
1135	0	Extremo 2A	-1.34	-7.638	-3.5E-09	0.1079	-0.0042	-4.728
1135	0.5	Extremo 2A	-1.34	0.00238	-3.5E-09	0.1079	-0.0042	-2.819
1135	1	Extremo 2A	-1.34	7.643	-3.5E-09	0.1079	-0.0042	-4.7304
1136	0	Extremo 1A	-1.34	-7.858	-2.8E-09	0.2645	-0.0042	-3.8344
1136	0.5	Extremo 1A	-1.34	-0.218	-2.8E-09	0.2645	-0.0042	-1.8153
1136	1	Extremo 1A	-1.34	7.423	-2.8E-09	0.2645	-0.0042	-3.6165
1136	0	Extremo 2A	-1.34	-7.858	-2.7E-09	0.2645	-0.0042	-3.8342
1136	0.5	Extremo 2A	-1.34	-0.218	-2.7E-09	0.2645	-0.0042	-1.8151
1136	1	Extremo 2A	-1.34	7.423	-2.7E-09	0.2645	-0.0042	-3.6164
1137	0	Extremo 1A	-1.34	-8.125	-2.2E-09	0.257	-0.0042	-2.5678
1137	0.5	Extremo 1A	-1.34	-0.484	-2.2E-09	0.257	-0.0042	-0.4156
1137	1	Extremo 1A	-1.34	7.156	-2.2E-09	0.257	-0.0042	-2.0837
1137	0	Extremo 2A	-1.34	-8.125	-2.2E-09	0.257	-0.0042	-2.5677
1137	0.5	Extremo 2A	-1.34	-0.484	-2.2E-09	0.257	-0.0042	-0.4155
1137	1	Extremo 2A	-1.34	7.157	-2.2E-09	0.257	-0.0042	-2.0836
1138	0	Extremo 1A	-1.34	-8.225	-1.7E-09	0.1776	-0.0042	-1.3277
1138	0.5	Extremo 1A	-1.34	-0.585	-1.7E-09	0.1776	-0.0042	0.8749
1138	1	Extremo 1A	-1.34	7.056	-1.7E-09	0.1776	-0.0042	-0.7428
1138	0	Extremo 2A	-1.34	-8.225	-1.7E-09	0.1776	-0.0042	-1.3276
1138	0.5	Extremo 2A	-1.34	-0.585	-1.7E-09	0.1776	-0.0042	0.8749
1138	1	Extremo 2A	-1.34	7.056	-1.7E-09	0.1776	-0.0042	-0.7429
1139	0	Extremo 1A	-1.34	-8.168	-1.3E-09	0.1051	-0.0042	-0.2986
1139	0.5	Extremo 1A	-1.34	-0.527	-1.3E-09	0.1051	-0.0042	1.8751
1139	1	Extremo 1A	-1.34	7.114	-1.3E-09	0.1051	-0.0042	0.2285
1139	0	Extremo 2A	-1.34	-8.168	-1.3E-09	0.1051	-0.0042	-0.2986
1139	0.5	Extremo 2A	-1.34	-0.527	-1.3E-09	0.1051	-0.0042	1.875
1139	1	Extremo 2A	-1.34	7.114	-1.3E-09	0.1051	-0.0042	0.2283
1140	0	Extremo 1A	-1.34	-8.021	-1.1E-09	0.0568	-0.0042	0.4689
1140	0.5	Extremo 1A	-1.34	-0.38	-1.1E-09	0.0568	-0.0042	2.5693
1140	1	Extremo 1A	-1.34	7.26	-1.1E-09	0.0568	-0.0042	0.8493
1140	0	Extremo 2A	-1.34	-8.021	-1E-09	0.0568	-0.0042	0.4687
1140	0.5	Extremo 2A	-1.34	-0.38	-1E-09	0.0568	-0.0042	2.5691
1140	1	Extremo 2A	-1.34	7.26	-1E-09	0.0568	-0.0042	0.8491
1141	0	Extremo 1A	-1.34	-7.837	-8.3E-10	0.0249	-0.0042	0.9684
1141	0.5	Extremo 1A	-1.34	-0.196	-8.3E-10	0.0249	-0.0042	2.9767
1141	1	Extremo 1A	-1.34	7.444	-8.3E-10	0.0249	-0.0042	1.1646
1141	0	Extremo 2A	-1.34	-7.837	-7.6E-10	0.0249	-0.0042	0.9682
1141	0.5	Extremo 2A	-1.34	-0.196	-7.6E-10	0.0249	-0.0042	2.9764
1141	1	Extremo 2A	-1.34	7.445	-7.6E-10	0.0249	-0.0042	1.1643
1142	0	Extremo 1A	-1.34	-7.64	-6.4E-10	-2.3E-06	-0.0042	1.2009
1142	0.5	Extremo 1A	-1.34	0.0003	-6.4E-10	-2.3E-06	-0.0042	3.1109
1142	1	Extremo 1A	-1.34	7.641	-6.4E-10	-2.3E-06	-0.0042	1.2006
1142	0	Extremo 2A	-1.34	-7.64	-5.6E-10	-3E-06	-0.0042	1.2006
1142	0.5	Extremo 2A	-1.34	0.00039	-5.6E-10	-3E-06	-0.0042	3.1106
1142	1	Extremo 2A	-1.34	7.641	-5.6E-10	-3E-06	-0.0042	1.2002
1143	0	Extremo 1A	-1.34	-7.444	-5E-10	-0.0249	-0.0042	1.1644
1143	0.5	Extremo 1A	-1.34	0.197	-5E-10	-0.0249	-0.0042	2.9761
1143	1	Extremo 1A	-1.34	7.837	-5E-10	-0.0249	-0.0042	0.9676
1143	0	Extremo 2A	-1.34	-7.444	-4E-10	-0.0249	-0.0042	1.1639
1143	0.5	Extremo 2A	-1.34	0.197	-4E-10	-0.0249	-0.0042	2.9756
1143	1	Extremo 2A	-1.34	7.838	-4E-10	-0.0249	-0.0042	0.967
1144	0	Extremo 1A	-1.34	-7.26	-3.8E-10	-0.0568	-0.0042	0.8485
1144	0.5	Extremo 1A	-1.34	0.381	-3.8E-10	-0.0568	-0.0042	2.5681
1144	1	Extremo 1A	-1.34	8.022	-3.8E-10	-0.0568	-0.0042	0.4674
1144	0	Extremo 2A	-1.34	-7.259	-2.6E-10	-0.0568	-0.0042	0.848
1144	0.5	Extremo 2A	-1.34	0.381	-2.6E-10	-0.0568	-0.0042	2.5676
1144	1	Extremo 2A	-1.34	8.022	-2.6E-10	-0.0568	-0.0042	0.4668
1145	0	Extremo 1A	-1.34	-7.113	-2.9E-10	-0.1051	-0.0042	0.227
1145	0.5	Extremo 1A	-1.34	0.528	-2.9E-10	-0.1051	-0.0042	1.8734
1145	1	Extremo 1A	-1.34	8.168	-2.9E-10	-0.1051	-0.0042	-0.3006
1145	0	Extremo 2A	-1.34	-7.113	-1.3E-10	-0.1051	-0.0042	0.2264
1145	0.5	Extremo 2A	-1.34	0.528	-1.3E-10	-0.1051	-0.0042	1.8727
1145	1	Extremo 2A	-1.34	8.168	-1.3E-10	-0.1051	-0.0042	-0.3013
1146	0	Extremo 1A	-1.34	-7.055	-2.2E-10	-0.1777	-0.0042	-0.7449
1146	0.5	Extremo 1A	-1.34	0.585	-2.2E-10	-0.1777	-0.0042	0.8726
1146	1	Extremo 1A	-1.34	8.226	-2.2E-10	-0.1777	-0.0042	-1.3302
1146	0	Extremo 2A	-1.34	-7.055	-8.6E-12	-0.1777	-0.0042	-0.7457
1146	0.5	Extremo 2A	-1.34	0.585	-8.6E-12	-0.1777	-0.0042	0.8718
1146	1	Extremo 2A	-1.34	8.226	-8.6E-12	-0.1777	-0.0042	-1.331
1147	0	Extremo 1A	-1.34	-7.156	-1.5E-10	-0.2571	-0.0042	-2.0865
1147	0.5	Extremo 1A	-1.34	0.484	-1.5E-10	-0.2571	-0.0042	-0.4185
1147	1	Extremo 1A	-1.34	8.125	-1.5E-10	-0.2571	-0.0042	-2.5709
1147	0	Extremo 2A	-1.34	-7.156	1.1E-10	-0.2572	-0.0042	-2.0873
1147	0.5	Extremo 2A	-1.34	0.484	1.1E-10	-0.2572	-0.0042	-0.4194
1147	1	Extremo 2A	-1.34	8.125	1.1E-10	-0.2572	-0.0042	-2.5718
1148	0	Extremo 1A	-1.34	-7.423	-1E-10	-0.2646	-0.0042	-3.62
1148	0.5	Extremo 1A	-1.34	0.218	-1E-10	-0.2646	-0.0042	-1.8188
1148	1	Extremo 1A	-1.34	7.858	-1E-10	-0.2646	-0.0042	-3.8379
1148	0	Extremo 2A	-1.34	-7.423	2.3E-10	-0.2646	-0.0042	-3.621
1148	0.5	Extremo 2A	-1.34	0.218	2.3E-10	-0.2646	-0.0042	-1.8197
1148	1	Extremo 2A	-1.34	7.858	2.3E-10	-0.2646	-0.0042	-3.8388
1149	0	Extremo 1A	-1.34	-7.643	-5.5E-11	-0.1079	-0.0042	-4.7345
1149	0.5	Extremo 1A	-1.34	-0.00257	-5.5E-11	-0.1079	-0.0042	-2.823
1149	1	Extremo 1A	-1.34	7.638	-5.5E-11	-0.1079	-0.0042	-4.7319
1149	0	Extremo 2A	-1.34	-7.643	3.7E-10	-0.1079	-0.0042	-4.7355

1149	0.5	Extremo 2A	-1.34	-0.00268	3.7E-10	-0.1079	-0.0042	-2.824
1149	1	Extremo 2A	-1.34	7.638	3.7E-10	-0.1079	-0.0042	-4.7328
1150	0	Extremo 1A	-1.34	-7.637	-1.3E-11	0.1079	-0.0042	-4.7319
1150	0.5	Extremo 1A	-1.34	0.00326	-1.3E-11	0.1079	-0.0042	-2.8234
1150	1	Extremo 1A	-1.34	7.644	-1.3E-11	0.1079	-0.0042	-4.7352
1150	0	Extremo 2A	-1.34	-7.638	5.2E-10	0.1079	-0.0042	-4.7328
1150	0.5	Extremo 2A	-1.34	0.00312	5.2E-10	0.1079	-0.0042	-2.8242
1150	1	Extremo 2A	-1.34	7.644	5.2E-10	0.1079	-0.0042	-4.7359
1151	0	Extremo 1A	-1.34	-7.858	2.8E-11	0.2646	-0.0042	-3.8386
1151	0.5	Extremo 1A	-1.34	-0.217	2.8E-11	0.2646	-0.0042	-1.8198
1151	1	Extremo 1A	-1.34	7.423	2.8E-11	0.2646	-0.0042	-3.6214
1151	0	Extremo 2A	-1.34	-7.858	7.1E-10	0.2646	-0.0042	-3.8392
1151	0.5	Extremo 2A	-1.34	-0.217	7.1E-10	0.2646	-0.0042	-1.8204
1151	1	Extremo 2A	-1.34	7.423	7.1E-10	0.2646	-0.0042	-3.6218
1152	0	Extremo 1A	-1.34	-8.124	7E-11	0.2571	-0.0042	-2.5722
1152	0.5	Extremo 1A	-1.34	-0.484	7E-11	0.2571	-0.0042	-0.4202
1152	1	Extremo 1A	-1.34	7.157	7E-11	0.2571	-0.0042	-2.0885
1152	0	Extremo 2A	-1.34	-8.125	9.3E-10	0.2571	-0.0042	-2.5726
1152	0.5	Extremo 2A	-1.34	-0.484	9.3E-10	0.2571	-0.0042	-0.4205
1152	1	Extremo 2A	-1.34	7.157	9.3E-10	0.2571	-0.0042	-2.0886
1153	0	Extremo 1A	-1.34	-8.225	1.2E-10	0.1777	-0.0042	-1.3322
1153	0.5	Extremo 1A	-1.34	-0.585	1.2E-10	0.1777	-0.0042	0.8702
1153	1	Extremo 1A	-1.34	7.056	1.2E-10	0.1777	-0.0042	-0.7476
1153	0	Extremo 2A	-1.34	-8.226	1.2E-09	0.1777	-0.0042	-1.3323
1153	0.5	Extremo 2A	-1.34	-0.585	1.2E-09	0.1777	-0.0042	0.8703
1153	1	Extremo 2A	-1.34	7.056	1.2E-09	0.1777	-0.0042	-0.7474
1154	0	Extremo 1A	-1.34	-8.168	1.7E-10	0.1051	-0.0042	-0.3032
1154	0.5	Extremo 1A	-1.34	-0.527	1.7E-10	0.1051	-0.0042	1.8704
1154	1	Extremo 1A	-1.34	7.114	1.7E-10	0.1051	-0.0042	0.2237
1154	0	Extremo 2A	-1.34	-8.168	1.5E-09	0.1051	-0.0042	-0.3029
1154	0.5	Extremo 2A	-1.34	-0.527	1.5E-09	0.1051	-0.0042	1.8708
1154	1	Extremo 2A	-1.34	7.113	1.5E-09	0.1051	-0.0042	0.2243
1155	0	Extremo 1A	-1.34	-8.021	2.3E-10	0.0568	-0.0042	0.4641
1155	0.5	Extremo 1A	-1.34	-0.38	2.3E-10	0.0568	-0.0042	2.5644
1155	1	Extremo 1A	-1.34	7.26	2.3E-10	0.0568	-0.0042	0.8445
1155	0	Extremo 2A	-1.34	-8.021	2E-09	0.0568	-0.0042	0.4647
1155	0.5	Extremo 2A	-1.34	-0.381	2E-09	0.0568	-0.0042	2.5652
1155	1	Extremo 2A	-1.34	7.26	2E-09	0.0568	-0.0042	0.8454
1156	0	Extremo 1A	-1.34	-7.837	3E-10	0.0249	-0.0042	0.9636
1156	0.5	Extremo 1A	-1.34	-0.196	3E-10	0.0249	-0.0042	2.9718
1156	1	Extremo 1A	-1.34	7.445	3E-10	0.0249	-0.0042	1.1597
1156	0	Extremo 2A	-1.34	-7.837	2.5E-09	0.0249	-0.0042	0.9645
1156	0.5	Extremo 2A	-1.34	-0.196	2.5E-09	0.0249	-0.0042	2.9729
1156	1	Extremo 2A	-1.34	7.444	2.5E-09	0.0249	-0.0042	1.161
1157	0	Extremo 1A	-1.34	-7.64	3.9E-10	-3.1E-06	-0.0042	1.196
1157	0.5	Extremo 1A	-1.34	0.00041	3.9E-10	-3.1E-06	-0.0042	3.1059
1157	1	Extremo 1A	-1.34	7.641	3.9E-10	-3.1E-06	-0.0042	1.1956
1157	0	Extremo 2A	-1.34	-7.641	3.2E-09	-3.8E-07	-0.0042	1.1973
1157	0.5	Extremo 2A	-1.34	5.7E-05	3.2E-09	-3.8E-07	-0.0042	3.1074
1157	1	Extremo 2A	-1.34	7.641	3.2E-09	-3.8E-07	-0.0042	1.1972
1158	0	Extremo 1A	-1.34	-7.444	5E-10	-0.0249	-0.0042	1.1593
1158	0.5	Extremo 1A	-1.34	0.197	5E-10	-0.0249	-0.0042	2.971
1158	1	Extremo 1A	-1.34	7.838	5E-10	-0.0249	-0.0042	0.9624
1158	0	Extremo 2A	-1.34	-7.444	4E-09	-0.0249	-0.0042	1.1609
1158	0.5	Extremo 2A	-1.34	0.197	4E-09	-0.0249	-0.0042	2.9728
1158	1	Extremo 2A	-1.34	7.837	4E-09	-0.0249	-0.0042	0.9643
1159	0	Extremo 1A	-1.34	-7.259	6.3E-10	-0.0568	-0.0042	0.8433
1159	0.5	Extremo 1A	-1.34	0.381	6.3E-10	-0.0568	-0.0042	2.5629
1159	1	Extremo 1A	-1.34	8.022	6.3E-10	-0.0568	-0.0042	0.4622
1159	0	Extremo 2A	-1.34	-7.26	5.1E-09	-0.0568	-0.0042	0.8453
1159	0.5	Extremo 2A	-1.34	0.381	5.1E-09	-0.0568	-0.0042	2.565
1159	1	Extremo 2A	-1.34	8.021	5.1E-09	-0.0568	-0.0042	0.4645
1160	0	Extremo 1A	-1.34	-7.113	8E-10	-0.1051	-0.0042	0.2217
1160	0.5	Extremo 1A	-1.34	0.528	8E-10	-0.1051	-0.0042	1.868
1160	1	Extremo 1A	-1.34	8.168	8E-10	-0.1051	-0.0042	-0.306
1160	0	Extremo 2A	-1.34	-7.113	6.4E-09	-0.1051	-0.0042	0.224
1160	0.5	Extremo 2A	-1.34	0.527	6.4E-09	-0.1051	-0.0042	1.8705
1160	1	Extremo 2A	-1.34	8.168	6.4E-09	-0.1051	-0.0042	-0.3033
1161	0	Extremo 1A	-1.34	-7.055	1E-09	-0.1778	-0.0042	-0.7505
1161	0.5	Extremo 1A	-1.34	0.585	1E-09	-0.1778	-0.0042	0.8671
1161	1	Extremo 1A	-1.34	8.226	1E-09	-0.1778	-0.0042	-1.3357
1161	0	Extremo 2A	-1.34	-7.056	8.1E-09	-0.1777	-0.0042	-0.7478
1161	0.5	Extremo 2A	-1.34	0.585	8.1E-09	-0.1777	-0.0042	0.8699
1161	1	Extremo 2A	-1.34	8.226	8.1E-09	-0.1777	-0.0042	-1.3327
1162	0	Extremo 1A	-1.34	-7.156	1.3E-09	-0.2573	-0.0042	-2.0923
1162	0.5	Extremo 1A	-1.34	0.484	1.3E-09	-0.2573	-0.0042	-0.4242
1162	1	Extremo 1A	-1.34	8.125	1.3E-09	-0.2573	-0.0042	-2.5765
1162	0	Extremo 2A	-1.34	-7.157	1E-08	-0.2572	-0.0042	-2.0891
1162	0.5	Extremo 2A	-1.34	0.484	1E-08	-0.2572	-0.0042	-0.421
1162	1	Extremo 2A	-1.34	8.125	1E-08	-0.2572	-0.0042	-2.5732
1163	0	Extremo 1A	-1.34	-7.423	1.6E-09	-0.2647	-0.0042	-3.6262
1163	0.5	Extremo 1A	-1.34	0.217	1.6E-09	-0.2647	-0.0042	-1.8246
1163	1	Extremo 1A	-1.34	7.858	1.6E-09	-0.2647	-0.0042	-3.8434
1163	0	Extremo 2A	-1.34	-7.423	1.3E-08	-0.2646	-0.0042	-3.6225
1163	0.5	Extremo 2A	-1.34	0.217	1.3E-08	-0.2646	-0.0042	-1.821
1163	1	Extremo 2A	-1.34	7.858	1.3E-08	-0.2646	-0.0042	-3.8399
1164	0	Extremo 1A	-1.34	-7.644	2.1E-09	-0.1079	-0.0042	-4.7405
1164	0.5	Extremo 1A	-1.34	-0.00357	2.1E-09	-0.1079	-0.0042	-2.8286
1164	1	Extremo 1A	-1.34	7.637	2.1E-09	-0.1079	-0.0042	-4.7369
1164	0	Extremo 2A	-1.34	-7.644	1.6E-08	-0.1079	-0.0042	-4.7367
1164	0.5	Extremo 2A	-1.34	-0.00317	1.6E-08	-0.1079	-0.0042	-2.8249
1164	1	Extremo 2A	-1.34	7.637	1.6E-08	-0.1079	-0.0042	-4.7335
1165	0	Extremo 1A	-1.34	-7.639	2.6E-09	0.108	-0.0042	-4.7369
1165	0.5	Extremo 1A	-1.34	0.00206	2.6E-09	0.108	-0.0042	-2.8278
1165	1	Extremo 1A	-1.34	7.643	2.6E-09	0.108	-0.0042	-4.739
1165	0	Extremo 2A	-1.34	-7.638	2.1E-08	0.1079	-0.0042	-4.7335
1165	0.5	Extremo 2A	-1.34	0.0026	2.1E-08	0.1079	-0.0042	-2.8247
1165	1	Extremo 2A	-1.34	7.643	2.1E-08	0.1079	-0.0042	-4.7361
1166	0	Extremo 1A	-1.34	-7.859	3.3E-09	0.2647	-0.0042	-3.8419
1166	0.5	Extremo 1A	-1.34	-0.219	3.3E-09	0.2647	-0.0042	-1.8224
1166	1	Extremo 1A	-1.34	7.422	3.3E-09	0.2647	-0.0042	-3.6232
1166	0	Extremo 2A	-1.34	-7.859	2.6E-08	0.2646	-0.0042	-3.8394
1166	0.5	Extremo 2A	-1.34	-0.218	2.6E-08	0.2646	-0.0042	-1.8202
1166	1	Extremo 2A	-1.34	7.423	2.6E-08	0.2646	-0.0042	-3.6214
1167	0	Extremo 1A	-1.34	-8.126	4.2E-09	0.2573	-0.0042	-2.5736
1167	0.5	Extremo 1A	-1.34	-0.486	4.2E-09	0.2573	-0.0042	-0.4206
1167	1	Extremo 1A	-1.34	7.155	4.2E-09	0.2573	-0.0042	-2.0879
1167	0	Extremo 2A	-1.34	-8.125	3.3E-08	0.2572	-0.0042	-2.5721
1167	0.5	Extremo 2A	-1.34	-0.485	3.3E-08	0.2572	-0.0042	-0.4197
1167	1	Extremo 2A	-1.34	7.156	3.3E-08	0.2572	-0.0042	-2.0875
1168	0	Extremo 1A	-1.34	-8.227	5.3E-09	0.1778	-0.0042	-1.3313
1168	0.5	Extremo 1A	-1.34	-0.587	5.3E-09	0.1778	-0.0042	0.8722
1168	1	Extremo 1A	-1.34	7.054	5.3E-09	0.1778	-0.0042	-0.7446
1168	0	Extremo 2A	-1.34	-8.226	4.1E-08	0.1777	-0.0042	-1.3312
1168	0.5	Extremo 2A	-1.34	-0.586	4.1E-08	0.1777	-0.0042	0.8718
1168	1	Extremo 2A	-1.34	7.055	4.1E-08	0.1777	-0.0042	-0.7456
1169	0	Extremo 1A	-1.34	-8.17	6.7E-09	0.1052	-0.0042	-0.3001
1169	0.5	Extremo 1A	-1.34	-0.529	6.7E-09	0.1052	-0.0042	1.8746
1169	1	Extremo 1A	-1.34	7.111	6.7E-09	0.1052	-0.0042	0.2291
1169	0	Extremo 2A	-1.34	-8.169	5.1E-08	0.1051	-0.0042	-0.3012
1169	0.5	Extremo 2A	-1.34	-0.528	5.1E-08	0.1051	-0.0042	1.8729
1169	1	Extremo 2A	-1.34	7.113	5.1E-08	0.1051	-0.0042	0.2267
1170	0	Extremo 1A	-1.34	-8.023	8.4E-09	0.0568	-0.0042	0.4695
1170	0.5	Extremo 1A	-1.34	-0.383	8.4E-09	0.0568	-0.0042	2.571
1170	1	Extremo 1A	-1.34	7.258	8.4E-09	0.0568	-0.0042	0.8521
1170	0	Extremo 2A	-1.34	-8.022	6.4E-08	0.0568	-0.0042	0.4671
1170	0.5	Extremo 2A	-1.34	-0.381	6.4E-08	0.0568	-0.0042	2.568
1170	1	Extremo 2A	-1.34	7.259	6.4E-08	0.0568	-0.0042	0.8485
1171	0	Extremo 1A	-1.34	-7.839	1.1E-08	0.025	-0.0042	0.9711
1171	0.5	Extremo 1A	-1.34	-0.198	1.1E-08	0.025	-0.0042	2.9805
1171	1	Extremo 1A	-1.34	7.442	1.1E-08	0.025	-0.0042	1.1696
1171	0	Extremo 2A	-1.34	-7.838	8E-08	0.0249	-0.0042	0.9675
1171	0.5	Extremo 2A	-1.34	-0.197	8E-08	0.0249	-0.0042	2.9763
1171	1	Extremo 2A	-1.34	7.443	8E-08	0.0249	-0.0042	1.1647
1172	0	Extremo 1A	-1.34	-7.643	1.3E-08	1.5E-05	-0.0042	1.2058
1172	0.5	Extremo 1A	-1.34	-0.00196	1.3E-08	1.5E-05	-0.0042	3.1169
1172	1	Extremo 1A	-1.34	7.639	1.3E-08	1.5E-05	-0.0042	1.2077
1172	0	Extremo 2A	-1.34	-7.641	1E-07	3.5E-06	-0.0042	1.2009
1172	0.5	Extremo 2A	-1.34	-0.00063	1E-07	3.5E-06	-0.0042	3.1114
1172	1	Extremo 2A	-1.34	7.64	1E-07	3.5E-06	-0.0042	1.2016
1173	0	Extremo 1A	-1.34	-7.446	1.7E-08	-0.0249	-0.0042	1.1713
1173	0.5	Extremo 1A	-1.34	0.195	1.7E-08	-0.0249	-0.0042	2.9842
1173	1	Extremo 1A	-1.34	7.835	1.7E-08	-0.0249	-0.0042	0.9768
1173	0	Extremo 2A	-1.34	-7.445	1.3E-07	-0.0249	-0.0042	1.1652

1173	0.5	Extremo 2A	-1.34	0.196	1.3E-07	-0.0249	-0.0042	2.9774
1173	1	Extremo 2A	-1.34	7.836	1.3E-07	-0.0249	-0.0042	0.9694
1174	0	Extremo 1A	-1.34	-7.262	2.1E-08	-0.0567	-0.0042	0.8577
1174	0.5	Extremo 1A	-1.34	0.379	2.1E-08	-0.0567	-0.0042	2.5784
1174	1	Extremo 1A	-1.34	8.019	2.1E-08	-0.0567	-0.0042	0.4788
1174	0	Extremo 2A	-1.34	-7.26	1.6E-07	-0.0568	-0.0042	0.8503
1174	0.5	Extremo 2A	-1.34	0.38	1.6E-07	-0.0568	-0.0042	2.5703
1174	1	Extremo 2A	-1.34	8.021	1.6E-07	-0.0568	-0.0042	0.4701
1175	0	Extremo 1A	-1.34	-7.115	2.7E-08	-0.105	-0.0042	0.2385
1175	0.5	Extremo 1A	-1.34	0.526	2.7E-08	-0.105	-0.0042	1.8859
1175	1	Extremo 1A	-1.34	8.166	2.7E-08	-0.105	-0.0042	-0.2871
1175	0	Extremo 2A	-1.34	-7.114	2E-07	-0.105	-0.0042	0.2297
1175	0.5	Extremo 2A	-1.34	0.527	2E-07	-0.105	-0.0042	1.8765
1175	1	Extremo 2A	-1.34	8.167	2E-07	-0.105	-0.0042	-0.297
1176	0	Extremo 1A	-1.34	-7.057	3.4E-08	-0.1774	-0.0042	-0.7309
1176	0.5	Extremo 1A	-1.34	0.584	3.4E-08	-0.1774	-0.0042	0.8874
1176	1	Extremo 1A	-1.34	8.224	3.4E-08	-0.1774	-0.0042	-1.3146
1176	0	Extremo 2A	-1.34	-7.056	2.4E-07	-0.1776	-0.0042	-0.7412
1176	0.5	Extremo 2A	-1.34	0.585	2.4E-07	-0.1776	-0.0042	0.8767
1176	1	Extremo 2A	-1.34	8.225	2.4E-07	-0.1776	-0.0042	-1.3258
1177	0	Extremo 1A	-1.34	-7.157	4.2E-08	-0.2566	-0.0042	-2.0695
1177	0.5	Extremo 1A	-1.34	0.484	4.2E-08	-0.2566	-0.0042	-0.4012
1177	1	Extremo 1A	-1.34	8.124	4.2E-08	-0.2566	-0.0042	-2.5533
1177	0	Extremo 2A	-1.34	-7.157	3E-07	-0.2569	-0.0042	-2.0816
1177	0.5	Extremo 2A	-1.34	0.484	3E-07	-0.2569	-0.0042	-0.4135
1177	1	Extremo 2A	-1.34	8.125	3E-07	-0.2569	-0.0042	-2.5657
1178	0	Extremo 1A	-1.34	-7.422	5.3E-08	-0.264	-0.0042	-3.6003
1178	0.5	Extremo 1A	-1.34	0.219	5.3E-08	-0.264	-0.0042	-1.7994
1178	1	Extremo 1A	-1.34	7.859	5.3E-08	-0.264	-0.0042	-3.8188
1178	0	Extremo 2A	-1.34	-7.423	3.7E-07	-0.2644	-0.0042	-3.614
1178	0.5	Extremo 2A	-1.34	0.218	3.7E-07	-0.2644	-0.0042	-1.8129
1178	1	Extremo 2A	-1.34	7.859	3.7E-07	-0.2644	-0.0042	-3.832
1179	0	Extremo 1A	-1.34	-7.641	6.7E-08	-0.1077	-0.0042	-4.7135
1179	0.5	Extremo 1A	-1.34	-0.00062	6.7E-08	-0.1077	-0.0042	-2.803
1179	1	Extremo 1A	-1.34	7.64	6.7E-08	-0.1077	-0.0042	-4.7129
1179	0	Extremo 2A	-1.34	-7.643	4.6E-07	-0.1078	-0.0042	-4.7278
1179	0.5	Extremo 2A	-1.34	-0.00199	4.6E-07	-0.1078	-0.0042	-2.8167
1179	1	Extremo 2A	-1.34	7.639	4.6E-07	-0.1078	-0.0042	-4.7258
1180	0	Extremo 1A	-1.34	-7.635	8.3E-08	0.1076	-0.0042	-4.7128
1180	0.5	Extremo 1A	-1.34	0.00599	8.3E-08	0.1076	-0.0042	-2.8057
1180	1	Extremo 1A	-1.34	7.647	8.3E-08	0.1076	-0.0042	-4.7188
1180	0	Extremo 2A	-1.34	-7.636	5.7E-07	0.1078	-0.0042	-4.7257
1180	0.5	Extremo 2A	-1.34	0.00413	5.7E-07	0.1078	-0.0042	-2.8176
1180	1	Extremo 2A	-1.34	7.645	5.7E-07	0.1078	-0.0042	-4.7298
1181	0	Extremo 1A	-1.34	-7.854	1E-07	0.264	-0.0042	-3.8241
1181	0.5	Extremo 1A	-1.34	-0.213	1E-07	0.264	-0.0042	-1.8073
1181	1	Extremo 1A	-1.34	7.427	1E-07	0.264	-0.0042	-3.6109
1181	0	Extremo 2A	-1.34	-7.856	6.9E-07	0.2644	-0.0042	-3.8336
1181	0.5	Extremo 2A	-1.34	-0.216	6.9E-07	0.2644	-0.0042	-1.8155
1181	1	Extremo 2A	-1.34	7.425	6.9E-07	0.2644	-0.0042	-3.6177
1182	0	Extremo 1A	-1.34	-8.119	1.3E-07	0.2566	-0.0042	-2.5638
1182	0.5	Extremo 1A	-1.34	-0.478	1.3E-07	0.2566	-0.0042	-0.4145
1182	1	Extremo 1A	-1.34	7.162	1.3E-07	0.2566	-0.0042	-2.0854
1182	0	Extremo 2A	-1.34	-8.123	8.5E-07	0.257	-0.0042	-2.569
1182	0.5	Extremo 2A	-1.34	-0.482	8.5E-07	0.257	-0.0042	-0.4179
1182	1	Extremo 2A	-1.34	7.159	8.5E-07	0.257	-0.0042	-2.087
1183	0	Extremo 1A	-1.34	-8.219	1.6E-07	0.1773	-0.0042	-1.3304
1183	0.5	Extremo 1A	-1.34	-0.578	1.6E-07	0.1773	-0.0042	0.8689
1183	1	Extremo 1A	-1.34	7.062	1.6E-07	0.1773	-0.0042	-0.7521
1183	0	Extremo 2A	-1.34	-8.223	1E-06	0.1776	-0.0042	-1.3309
1183	0.5	Extremo 2A	-1.34	-0.582	1E-06	0.1776	-0.0042	0.8705
1183	1	Extremo 2A	-1.34	7.058	1E-06	0.1776	-0.0042	-0.7484
1184	0	Extremo 1A	-1.34	-8.161	2E-07	0.1049	-0.0042	-0.3081
1184	0.5	Extremo 1A	-1.34	-0.52	2E-07	0.1049	-0.0042	1.8621
1184	1	Extremo 1A	-1.34	7.12	2E-07	0.1049	-0.0042	0.212
1184	0	Extremo 2A	-1.34	-8.165	1.3E-06	0.1051	-0.0042	-0.3039
1184	0.5	Extremo 2A	-1.34	-0.525	1.3E-06	0.1051	-0.0042	1.8686
1184	1	Extremo 2A	-1.34	7.116	1.3E-06	0.1051	-0.0042	0.2208
1185	0	Extremo 1A	-1.34	-8.014	2.5E-07	0.0567	-0.0042	0.4525
1185	0.5	Extremo 1A	-1.34	-0.373	2.5E-07	0.0567	-0.0042	2.5494
1185	1	Extremo 1A	-1.34	7.267	2.5E-07	0.0567	-0.0042	0.8259
1185	0	Extremo 2A	-1.34	-8.019	1.5E-06	0.0568	-0.0042	0.4615
1185	0.5	Extremo 2A	-1.34	-0.378	1.5E-06	0.0568	-0.0042	2.5607
1185	1	Extremo 2A	-1.34	7.263	1.5E-06	0.0568	-0.0042	0.8396
1186	0	Extremo 1A	-1.34	-7.83	3.1E-07	0.0249	-0.0042	0.9452
1186	0.5	Extremo 1A	-1.34	-0.189	3.1E-07	0.0249	-0.0042	2.9499
1186	1	Extremo 1A	-1.34	7.452	3.1E-07	0.0249	-0.0042	1.1343
1186	0	Extremo 2A	-1.34	-7.834	1.8E-06	0.025	-0.0042	0.959
1186	0.5	Extremo 2A	-1.34	-0.194	1.8E-06	0.025	-0.0042	2.966
1186	1	Extremo 2A	-1.34	7.447	1.8E-06	0.025	-0.0042	1.1528
1187	0	Extremo 1A	-1.34	-7.633	3.9E-07	-6.4E-05	-0.0042	1.1709
1187	0.5	Extremo 1A	-1.34	0.00752	3.9E-07	-6.4E-05	-0.0042	3.0773
1187	1	Extremo 1A	-1.34	7.648	3.9E-07	-6.4E-05	-0.0042	1.1634
1187	0	Extremo 2A	-1.34	-7.638	2.1E-06	9.7E-06	-0.0042	1.1894
1187	0.5	Extremo 2A	-1.34	0.00268	2.1E-06	9.7E-06	-0.0042	3.0982
1187	1	Extremo 2A	-1.34	7.643	2.1E-06	9.7E-06	-0.0042	1.1867
1188	0	Extremo 1A	-1.34	-7.437	4.8E-07	-0.025	-0.0042	1.1275
1188	0.5	Extremo 1A	-1.34	0.204	4.8E-07	-0.025	-0.0042	2.9356
1188	1	Extremo 1A	-1.34	7.845	4.8E-07	-0.025	-0.0042	0.9235
1188	0	Extremo 2A	-1.34	-7.442	2.5E-06	-0.025	-0.0042	1.1506
1188	0.5	Extremo 2A	-1.34	0.199	2.5E-06	-0.025	-0.0042	2.9613
1188	1	Extremo 2A	-1.34	7.84	2.5E-06	-0.025	-0.0042	0.9516
1189	0	Extremo 1A	-1.34	-7.253	5.9E-07	-0.057	-0.0042	0.8046
1189	0.5	Extremo 1A	-1.34	0.388	5.9E-07	-0.057	-0.0042	2.5207
1189	1	Extremo 1A	-1.34	8.029	5.9E-07	-0.057	-0.0042	0.4165
1189	0	Extremo 2A	-1.34	-7.258	2.9E-06	-0.0569	-0.0042	0.8324
1189	0.5	Extremo 2A	-1.34	0.383	2.9E-06	-0.0569	-0.0042	2.5511
1189	1	Extremo 2A	-1.34	8.024	2.9E-06	-0.0569	-0.0042	0.4494
1190	0	Extremo 1A	-1.34	-7.107	7.3E-07	-0.1056	-0.0042	0.1756
1190	0.5	Extremo 1A	-1.34	0.534	7.3E-07	-0.1056	-0.0042	1.8188
1190	1	Extremo 1A	-1.34	8.175	7.3E-07	-0.1056	-0.0042	-0.3583
1190	0	Extremo 2A	-1.34	-7.112	3.4E-06	-0.1055	-0.0042	0.2084
1190	0.5	Extremo 2A	-1.34	0.529	3.4E-06	-0.1055	-0.0042	1.854
1190	1	Extremo 2A	-1.34	8.17	3.4E-06	-0.1055	-0.0042	-0.3207
1191	0	Extremo 1A	-1.34	-7.051	8.9E-07	-0.1788	-0.0042	-0.8048
1191	0.5	Extremo 1A	-1.34	0.59	8.9E-07	-0.1788	-0.0042	0.8104
1191	1	Extremo 1A	-1.34	8.231	8.9E-07	-0.1788	-0.0042	-1.3948
1191	0	Extremo 2A	-1.34	-7.055	3.8E-06	-0.1784	-0.0042	-0.7667
1191	0.5	Extremo 2A	-1.34	0.586	3.8E-06	-0.1784	-0.0042	0.8506
1191	1	Extremo 2A	-1.34	8.226	3.8E-06	-0.1784	-0.0042	-1.3524
1192	0	Extremo 1A	-1.34	-7.155	1.1E-06	-0.2589	-0.0042	-2.156
1192	0.5	Extremo 1A	-1.34	0.486	1.1E-06	-0.2589	-0.0042	-0.4887
1192	1	Extremo 1A	-1.34	8.126	1.1E-06	-0.2589	-0.0042	-2.6418
1192	0	Extremo 2A	-1.34	-7.158	4.2E-06	-0.2583	-0.0042	-2.112
1192	0.5	Extremo 2A	-1.34	0.483	4.2E-06	-0.2583	-0.0042	-0.4434
1192	1	Extremo 2A	-1.34	8.124	4.2E-06	-0.2583	-0.0042	-2.5951
1193	0	Extremo 1A	-1.34	-7.426	1.3E-06	-0.2665	-0.0042	-3.6987
1193	0.5	Extremo 1A	-1.34	0.214	1.3E-06	-0.2665	-0.0042	-1.8957
1193	1	Extremo 1A	-1.34	7.855	1.3E-06	-0.2665	-0.0042	-3.913
1193	0	Extremo 2A	-1.34	-7.427	4.4E-06	-0.266	-0.0042	-3.6494
1193	0.5	Extremo 2A	-1.34	0.214	4.4E-06	-0.266	-0.0042	-1.8461
1193	1	Extremo 2A	-1.34	7.854	4.4E-06	-0.266	-0.0042	-3.8632
1194	0	Extremo 1A	-1.34	-7.652	1.6E-06	-0.1085	-0.0042	-4.8164
1194	0.5	Extremo 1A	-1.34	-0.011	1.6E-06	-0.1085	-0.0042	-2.9008
1194	1	Extremo 1A	-1.34	7.63	1.6E-06	-0.1085	-0.0042	-4.8055
1194	0	Extremo 2A	-1.34	-7.65	4.4E-06	-0.109	-0.0042	-4.7656
1194	0.5	Extremo 2A	-1.34	-0.00924	4.4E-06	-0.109	-0.0042	-2.8508
1194	1	Extremo 2A	-1.34	7.631	4.4E-06	-0.109	-0.0042	-4.7563
1195	0	Extremo 1A	-1.34	-7.649	1.9E-06	0.1092	-0.0042	-4.8049
1195	0.5	Extremo 1A	-1.34	-0.00789	1.9E-06	0.1092	-0.0042	-2.8908
1195	1	Extremo 1A	-1.34	7.633	1.9E-06	0.1092	-0.0042	-4.797
1195	0	Extremo 2A	-1.34	-7.646	4.1E-06	0.1072	-0.0042	-4.7604
1195	0.5	Extremo 2A	-1.34	-0.00537	4.1E-06	0.1072	-0.0042	-2.8475
1195	1	Extremo 2A	-1.34	7.635	4.1E-06	0.1072	-0.0042	-4.755
1196	0	Extremo 1A	-1.34	-7.874	2.3E-06	0.2672	-0.0042	-3.8924
1196	0.5	Extremo 1A	-1.34	-0.233	2.3E-06	0.2672	-0.0042	-1.8657
1196	1	Extremo 1A	-1.34	7.408	2.3E-06	0.2672	-0.0042	-3.6593
1196	0	Extremo 2A	-1.34	-7.869	3.1E-06	0.2642	-0.0042	-3.8606
1196	0.5	Extremo 2A	-1.34	-0.228	3.1E-06	0.2642	-0.0042	-1.8362
1196	1	Extremo 2A	-1.34	7.412	3.1E-06	0.2642	-0.0042	-3.6322
1197	0	Extremo 1A	-1.34	-8.145	2.7E-06	0.2596	-0.0042	-2.6013
1197	0.5	Extremo 1A	-1.34	-0.505	2.7E-06	0.2596	-0.0042	-0.4388
1197	1	Extremo 1A	-1.34	7.136	2.7E-06	0.2596	-0.0042	-2.0965
1197	0	Extremo 2A	-1.34	-8.138	1.1E-06	0.2565	-0.0042	-2.5858

1197	0.5	Extremo 2A	-1.34	-0.498	1.1E-06	0.2565	-0.0042	-0.4269
1197	1	Extremo 2A	-1.34	7.143	1.1E-06	0.2565	-0.0042	-2.0882
1198	0	Extremo 1A	-1.34	-8.25	3.1E-06	0.1794	-0.0042	-1.3343
1198	0.5	Extremo 1A	-1.34	-0.609	3.1E-06	0.1794	-0.0042	0.8803
1198	1	Extremo 1A	-1.34	7.032	3.1E-06	0.1794	-0.0042	-0.7254
1198	0	Extremo 2A	-1.34	-8.241	-2.4E-06	0.1767	-0.0042	-1.3365
1198	0.5	Extremo 2A	-1.34	-0.6	-2.4E-06	0.1767	-0.0042	0.8737
1198	1	Extremo 2A	-1.34	7.041	-2.4E-06	0.1767	-0.0042	-0.7364
1199	0	Extremo 1A	-1.34	-8.194	3.6E-06	0.1062	-0.0042	-0.278
1199	0.5	Extremo 1A	-1.34	-0.553	3.6E-06	0.1062	-0.0042	1.9087
1199	1	Extremo 1A	-1.34	7.088	3.6E-06	0.1062	-0.0042	0.275
1199	0	Extremo 2A	-1.34	-8.184	-8E-06	0.1039	-0.0042	-0.2979
1199	0.5	Extremo 2A	-1.34	-0.543	-8E-06	0.1039	-0.0042	1.8839
1199	1	Extremo 2A	-1.34	7.097	-8E-06	0.1039	-0.0042	0.2453
1200	0	Extremo 1A	-1.34	-8.048	4.1E-06	0.0575	-0.0042	0.5166
1200	0.5	Extremo 1A	-1.34	-0.407	4.1E-06	0.0575	-0.0042	2.6305
1200	1	Extremo 1A	-1.34	7.233	4.1E-06	0.0575	-0.0042	0.924
1200	0	Extremo 2A	-1.34	-8.037	-1.7E-05	0.0555	-0.0042	0.4792
1200	0.5	Extremo 2A	-1.34	-0.397	-1.7E-05	0.0555	-0.0042	2.5877
1200	1	Extremo 2A	-1.34	7.244	-1.7E-05	0.0555	-0.0041	0.876
1201	0	Extremo 1A	-1.34	-7.864	4.6E-06	0.0255	-0.0042	1.0433
1201	0.5	Extremo 1A	-1.34	-0.224	4.6E-06	0.0255	-0.0042	3.0653
1201	1	Extremo 1A	-1.34	7.417	4.6E-06	0.0255	-0.0042	1.2669
1201	0	Extremo 2A	-1.34	-7.853	-3E-05	0.0238	-0.0042	0.9888
1201	0.5	Extremo 2A	-1.34	-0.212	-3E-05	0.0238	-0.0042	3.0049
1201	1	Extremo 2A	-1.34	7.429	-3E-05	0.0238	-0.0041	1.2008
1202	0	Extremo 1A	-1.34	-7.668	4.9E-06	0.00037	-0.0042	1.3027
1202	0.5	Extremo 1A	-1.34	-0.028	4.9E-06	0.00037	-0.0042	3.2267
1202	1	Extremo 1A	-1.34	7.613	4.9E-06	0.00037	-0.0042	1.3304
1202	0	Extremo 2A	-1.34	-7.655	-5E-05	-0.00061	-0.0042	1.232
1202	0.5	Extremo 2A	-1.34	-0.014	-5E-05	-0.00061	-0.0042	3.1492
1202	1	Extremo 2A	-1.34	7.626	-5E-05	-0.00061	-0.0041	1.2461
1203	0	Extremo 1A	-1.34	-7.472	5E-06	-0.0246	-0.0042	1.2931
1203	0.5	Extremo 1A	-1.34	0.168	5E-06	-0.0246	-0.0042	3.119
1203	1	Extremo 1A	-1.34	7.809	5E-06	-0.0246	-0.0042	1.1247
1203	0	Extremo 2A	-1.339	-7.456	-7.9E-05	-0.0246	-0.0042	1.2073
1203	0.5	Extremo 2A	-1.339	0.185	-7.9E-05	-0.0246	-0.0042	3.025
1203	1	Extremo 2A	-1.339	7.825	-7.9E-05	-0.0246	-0.0041	1.0224
1204	0	Extremo 1A	-1.34	-7.288	4.8E-06	-0.0563	-0.0042	1.0045
1204	0.5	Extremo 1A	-1.34	0.353	4.8E-06	-0.0563	-0.0042	2.7383
1204	1	Extremo 1A	-1.34	7.993	4.8E-06	-0.0563	-0.0042	0.6519
1204	0	Extremo 2A	-1.339	-7.267	-0.00012	-0.0548	-0.0042	0.9054
1204	0.5	Extremo 2A	-1.339	0.374	-0.00012	-0.0548	-0.0042	2.6287
1204	1	Extremo 2A	-1.339	8.014	-0.00012	-0.0548	-0.0041	0.5317
1205	0	Extremo 1A	-1.34	-7.14	4E-06	-0.1039	-0.0042	0.4115
1205	0.5	Extremo 1A	-1.34	0.5	4E-06	-0.1039	-0.0042	2.0715
1205	1	Extremo 1A	-1.34	8.141	4E-06	-0.1039	-0.0042	-0.0888
1205	0	Extremo 2A	-1.338	-7.112	-0.00018	-0.1004	-0.0042	0.3015
1205	0.5	Extremo 2A	-1.338	0.528	-0.00018	-0.1004	-0.0041	1.9476
1205	1	Extremo 2A	-1.338	8.169	-0.00018	-0.1004	-0.0041	-0.2266
1206	0	Extremo 1A	-1.34	-7.079	2.2E-06	-0.1749	-0.0042	-0.5294
1206	0.5	Extremo 1A	-1.34	0.562	2.2E-06	-0.1749	-0.0042	1.0998
1206	1	Extremo 1A	-1.34	8.203	2.2E-06	-0.1749	-0.0042	-1.0914
1206	0	Extremo 2A	-1.337	-7.042	-0.00026	-0.1687	-0.0043	-0.6473
1206	0.5	Extremo 2A	-1.337	0.599	-0.00026	-0.1687	-0.0041	0.9634
1206	1	Extremo 2A	-1.337	8.24	-0.00026	-0.1687	-0.004	-1.2463
1207	0	Extremo 1A	-1.34	-7.17	-9.9E-07	-0.2526	-0.0042	-1.8364
1207	0.5	Extremo 1A	-1.34	0.47	-9.9E-07	-0.2526	-0.0042	-0.1615
1207	1	Extremo 1A	-1.34	8.111	-9.9E-07	-0.2526	-0.0042	-2.3069
1207	0	Extremo 2A	-1.335	-7.122	-0.00038	-0.2428	-0.0043	-1.9588
1207	0.5	Extremo 2A	-1.335	0.519	-0.00038	-0.2428	-0.0041	-0.308
1207	1	Extremo 2A	-1.335	8.159	-0.00038	-0.2428	-0.0039	-2.4774
1208	0	Extremo 1A	-1.34	-7.422	-6.3E-06	-0.2606	-0.0042	-3.3379
1208	0.5	Extremo 1A	-1.34	0.219	-6.3E-06	-0.2606	-0.0042	-1.5371
1208	1	Extremo 1A	-1.34	7.859	-6.3E-06	-0.2606	-0.0042	-3.5565
1208	0	Extremo 2A	-1.333	-7.361	-0.00054	-0.2455	-0.0044	-3.4588
1208	0.5	Extremo 2A	-1.333	0.28	-0.00054	-0.2455	-0.0041	-1.6885
1208	1	Extremo 2A	-1.333	7.92	-0.00054	-0.2455	-0.0039	-3.7385
1209	0	Extremo 1A	-1.34	-7.629	-1.5E-05	-0.1096	-0.0042	-4.4423
1209	0.5	Extremo 1A	-1.34	0.012	-1.5E-05	-0.1096	-0.0042	-2.5379
1209	1	Extremo 1A	-1.34	7.652	-1.5E-05	-0.1096	-0.0042	-4.4539
1209	0	Extremo 2A	-1.33	-7.551	-0.00076	-0.0867	-0.0045	-4.5486
1209	0.5	Extremo 2A	-1.33	0.089	-0.00076	-0.0867	-0.0041	-2.683
1209	1	Extremo 2A	-1.33	7.73	-0.00076	-0.0867	-0.0037	-4.6378
1210	0	Extremo 1A	-1.34	-7.617	-2.8E-05	0.0985	-0.0042	-4.4741
1210	0.5	Extremo 1A	-1.34	0.024	-2.8E-05	0.0985	-0.0042	-2.5758
1210	1	Extremo 1A	-1.34	7.664	-2.8E-05	0.0985	-0.0041	-4.4979
1210	0	Extremo 2A	-1.325	-7.519	-0.00107	0.1301	-0.0046	-4.5454
1210	0.5	Extremo 2A	-1.325	0.121	-0.00107	0.1301	-0.0041	-2.6959
1210	1	Extremo 2A	-1.325	7.762	-0.00107	0.1301	-0.0036	-4.6666
1211	0	Extremo 1A	-1.34	-7.824	-4.7E-05	0.2495	-0.0042	-3.6524
1211	0.5	Extremo 1A	-1.34	-0.183	-4.7E-05	0.2495	-0.0042	-1.6507
1211	1	Extremo 1A	-1.34	7.458	-4.7E-05	0.2495	-0.0041	-3.4694
1211	0	Extremo 2A	-1.319	-7.711	-0.00148	0.2885	-0.0048	-3.6724
1211	0.5	Extremo 2A	-1.319	-0.07	-0.00148	0.2885	-0.0041	-1.7271
1211	1	Extremo 2A	-1.319	7.57	-0.00148	0.2885	-0.0034	-3.6021
1212	0	Extremo 1A	-1.339	-8.075	-7.5E-05	0.2417	-0.0042	-2.4782
1212	0.5	Extremo 1A	-1.339	-0.434	-7.5E-05	0.2417	-0.0042	-0.3509
1212	1	Extremo 1A	-1.339	7.206	-7.5E-05	0.2417	-0.0041	-2.0439
1212	0	Extremo 2A	-1.311	-7.952	-0.00203	0.2852	-0.0051	-2.4383
1212	0.5	Extremo 2A	-1.311	-0.311	-0.00203	0.2852	-0.0041	-0.3727
1212	1	Extremo 2A	-1.311	7.33	-0.00203	0.2852	-0.0031	-2.1274
1213	0	Extremo 1A	-1.339	-8.165	-0.00012	0.1644	-0.0042	-1.3376
1213	0.5	Extremo 1A	-1.339	-0.525	-0.00012	0.1644	-0.0042	0.8349
1213	1	Extremo 1A	-1.339	7.116	-0.00012	0.1644	-0.0041	-0.8128
1213	0	Extremo 2A	-1.299	-8.035	-0.00276	0.21	-0.0054	-1.2356
1213	0.5	Extremo 2A	-1.299	-0.395	-0.00276	0.21	-0.004	0.8719
1213	1	Extremo 2A	-1.299	7.246	-0.00276	0.21	-0.0027	-0.8408
1214	0	Extremo 1A	-1.338	-8.102	-0.00017	0.094	-0.0042	-0.4093
1214	0.5	Extremo 1A	-1.338	-0.461	-0.00017	0.094	-0.0041	1.7315
1214	1	Extremo 1A	-1.338	7.179	-0.00017	0.094	-0.0041	0.0521
1214	0	Extremo 2A	-1.284	-7.97	-0.00372	0.1397	-0.0059	-0.2467
1214	0.5	Extremo 2A	-1.284	-0.33	-0.00372	0.1397	-0.004	1.8283
1214	1	Extremo 2A	-1.284	7.311	-0.00372	0.1397	-0.0021	0.083
1215	0	Extremo 1A	-1.337	-7.951	-0.00026	0.0474	-0.0043	0.2585
1215	0.5	Extremo 1A	-1.337	-0.311	-0.00026	0.0474	-0.0041	2.3239
1215	1	Extremo 1A	-1.337	7.33	-0.00026	0.0474	-0.004	0.5691
1215	0	Extremo 2A	-1.264	-7.825	-0.00499	0.0911	-0.0064	0.4773
1215	0.5	Extremo 2A	-1.264	-0.185	-0.00499	0.0911	-0.0039	2.4797
1215	1	Extremo 2A	-1.264	7.456	-0.00499	0.0911	-0.0014	0.6618
1216	0	Extremo 1A	-1.335	-7.762	-0.00037	0.0175	-0.0043	0.6604
1216	0.5	Extremo 1A	-1.335	-0.121	-0.00037	0.0175	-0.0041	2.6312
1216	1	Extremo 1A	-1.335	7.519	-0.00037	0.0175	-0.004	0.7817
1216	0	Extremo 2A	-1.237	-7.651	-0.00663	0.0561	-0.0072	0.928
1216	0.5	Extremo 2A	-1.237	-0.01	-0.00663	0.0561	-0.0039	2.8434
1216	1	Extremo 2A	-1.237	7.63	-0.00663	0.0561	-0.00056	0.9384
1217	0	Extremo 1A	-1.333	-7.558	-0.00053	-0.0047	-0.0044	0.7986
1217	0.5	Extremo 1A	-1.333	0.083	-0.00053	-0.0047	-0.0041	2.6673
1217	1	Extremo 1A	-1.333	7.724	-0.00053	-0.0047	-0.0039	0.7156
1217	0	Extremo 2A	-1.202	-7.474	-0.00875	0.0249	-0.0082	1.1035
1217	0.5	Extremo 2A	-1.202	0.166	-0.00875	0.0249	-0.0038	2.9306
1217	1	Extremo 2A	-1.202	7.807	-0.00875	0.0249	0.00058	0.9373
1218	0	Extremo 1A	-1.33	-7.349	-0.00075	-0.0257	-0.0045	0.6726
1218	0.5	Extremo 1A	-1.33	0.292	-0.00075	-0.0257	-0.0041	2.4368
1218	1	Extremo 1A	-1.33	7.932	-0.00075	-0.0257	-0.0037	0.3808
1218	0	Extremo 2A	-1.157	-7.31	-0.011	-0.01	-0.0094	0.9979
1218	0.5	Extremo 2A	-1.157	0.331	-0.011	-0.01	-0.0037	2.7428
1218	1	Extremo 2A	-1.157	7.971	-0.011	-0.01	0.002	0.6673
1219	0	Extremo 1A	-1.325	-7.146	-0.00106	-0.0522	-0.0046	0.2738
1219	0.5	Extremo 1A	-1.325	0.494	-0.00106	-0.0522	-0.0041	1.9368
1219	1	Extremo 1A	-1.325	8.135	-0.00106	-0.0522	-0.0036	-0.2205
1219	0	Extremo 2A	-1.099	-7.173	-0.015	-0.056	-0.0111	0.5969
1219	0.5	Extremo 2A	-1.099	0.468	-0.015	-0.056	-0.0036	2.273
1219	1	Extremo 2A	-1.099	8.109	-0.015	-0.056	0.0039	0.1289
1220	0	Extremo 1A	-1.319	-6.975	-0.00146	-0.0938	-0.0048	-0.4232
1220	0.5	Extremo 1A	-1.319	0.665	-0.00146	-0.0938	-0.0041	1.1543
1220	1	Extremo 1A	-1.319	8.306	-0.00146	-0.0938	-0.0034	-1.0886
1220	0	Extremo 2A	-1.023	-7.09	-0.019	-0.123	-0.0131	-0.1302
1220	0.5	Extremo 2A	-1.023	0.55	-0.019	-0.123	-0.0034	1.5048
1220	1	Extremo 2A	-1.023	8.191	-0.019	-0.123	0.0063	-0.6804
1221	0	Extremo 1A	-1.311	-6.889	-0.00201	-0.1587	-0.0051	-1.4644
1221	0.5	Extremo 1A	-1.311	0.751	-0.00201	-0.1587	-0.0041	0.0701
1221	1	Extremo 1A	-1.311	8.392	-0.00201	-0.1587	-0.0031	-2.2157
1221	0	Extremo 2A	-0.926	-7.115	-0.025	-0.218	-0.0154	-1.2306

1221	0.5	Extremo 2A	-0.926	0.525	-0.025	-0.218	-0.0031	0.4169
1221	1	Extremo 2A	-0.926	8.166	-0.025	-0.218	0.0092	-1.7558
1222	0	Extremo 1A	-1.3	-6.964	-0.00274	-0.2278	-0.0054	-2.8679
1222	0.5	Extremo 1A	-1.3	0.677	-0.00274	-0.2278	-0.004	-1.2962
1222	1	Extremo 1A	-1.3	8.317	-0.00274	-0.2278	-0.0027	-3.5447
1222	0	Extremo 2A	-0.806	-7.314	-0.03	-0.3192	-0.0174	-2.7185
1222	0.5	Extremo 2A	-0.806	0.327	-0.03	-0.3192	-0.0027	-0.9717
1222	1	Extremo 2A	-0.806	7.967	-0.03	-0.3192	0.0121	-3.0451
1223	0	Extremo 1A	-1.284	-7.208	-0.00371	-0.215	-0.0058	-4.4378
1223	0.5	Extremo 1A	-1.284	0.432	-0.00371	-0.215	-0.004	-2.7438
1223	1	Extremo 1A	-1.284	8.073	-0.00371	-0.215	-0.0021	-4.87
1223	0	Extremo 2A	-0.67	-7.68	-0.032	-0.3384	-0.0179	-4.3907
1223	0.5	Extremo 2A	-0.67	-0.039	-0.032	-0.3384	-0.0021	-2.4609
1223	1	Extremo 2A	-0.67	7.601	-0.032	-0.3384	0.0138	-4.3515
1224	0	Extremo 1A	-1.264	-7.395	-0.00498	-0.0205	-0.0064	-5.5032
1224	0.5	Extremo 1A	-1.264	0.245	-0.00498	-0.0205	-0.0039	-3.7156
1224	1	Extremo 1A	-1.264	7.886	-0.00498	-0.0205	-0.0014	-5.7483
1224	0	Extremo 2A	-0.534	-7.969	-0.03	-0.1736	-0.0163	-5.5735
1224	0.5	Extremo 2A	-0.534	-0.329	-0.03	-0.1736	-0.0015	-3.499
1224	1	Extremo 2A	-0.534	7.312	-0.03	-0.1736	0.0133	-5.2448
1225	0	Extremo 1A	-1.238	-7.337	-0.00663	0.2372	-0.0072	-5.3009
1225	0.5	Extremo 1A	-1.238	0.303	-0.00663	0.2372	-0.0039	-3.5425
1225	1	Extremo 1A	-1.238	7.944	-0.00663	0.2372	-0.00056	-5.6044
1225	0	Extremo 2A	-0.415	-7.981	-0.025	0.0615	-0.0134	-5.5041
1225	0.5	Extremo 2A	-0.415	-0.34	-0.025	0.0615	-0.0011	-3.4237
1225	1	Extremo 2A	-0.415	7.3	-0.025	0.0615	0.0113	-5.1637
1226	0	Extremo 1A	-1.203	-7.547	-0.00876	0.4243	-0.0082	-4.0907
1226	0.5	Extremo 1A	-1.203	0.093	-0.00876	0.4243	-0.0038	-2.2273
1226	1	Extremo 1A	-1.203	7.734	-0.00876	0.4243	0.00059	-4.1841
1226	0	Extremo 2A	-0.318	-8.213	-0.019	0.2379	-0.0105	-4.431
1226	0.5	Extremo 2A	-0.318	-0.573	-0.019	0.2379	-0.00077	-2.2344
1226	1	Extremo 2A	-0.318	7.068	-0.019	0.2379	0.0089	-3.8581
1227	0	Extremo 1A	-1.157	-7.841	-0.012	0.4215	-0.0094	-2.4555
1227	0.5	Extremo 1A	-1.157	-0.2	-0.012	0.4215	-0.0037	-0.4452
1227	1	Extremo 1A	-1.157	7.44	-0.012	0.4215	0.0021	-2.2552
1227	0	Extremo 2A	-0.242	-8.482	-0.015	0.2398	-0.0081	-2.9211
1227	0.5	Extremo 2A	-0.242	-0.842	-0.015	0.2398	-0.00059	-0.5902
1227	1	Extremo 2A	-0.242	6.799	-0.015	0.2398	0.0069	-2.0795
1228	0	Extremo 1A	-1.098	-7.996	-0.015	0.3277	-0.0111	-0.8476
1228	0.5	Extremo 1A	-1.098	-0.355	-0.015	0.3277	-0.0036	1.2401
1228	1	Extremo 1A	-1.098	7.286	-0.015	0.3277	0.004	-0.4925
1228	0	Extremo 2A	-0.183	-8.569	-0.011	0.1653	-0.0062	-1.4115
1228	0.5	Extremo 2A	-0.183	-0.928	-0.011	0.1653	-0.00047	0.9627
1228	1	Extremo 2A	-0.183	6.713	-0.011	0.1653	0.0053	-0.4835
1229	0	Extremo 1A	-1.022	-8.027	-0.02	0.2283	-0.0131	0.5182
1229	0.5	Extremo 1A	-1.022	-0.386	-0.02	0.2283	-0.0034	2.6213
1229	1	Extremo 1A	-1.022	7.255	-0.02	0.2283	0.0064	0.9041
1229	0	Extremo 2A	-0.138	-8.488	-0.00874	0.0981	-0.0047	-0.1043
1229	0.5	Extremo 2A	-0.138	-0.848	-0.00874	0.0981	-0.00037	2.2296
1229	1	Extremo 2A	-0.138	6.793	-0.00874	0.0981	0.004	0.7432
1230	0	Extremo 1A	-0.924	-8.011	-0.025	0.1431	-0.0155	1.5784
1230	0.5	Extremo 1A	-0.924	-0.37	-0.025	0.1431	-0.0031	3.6735
1230	1	Extremo 1A	-0.924	7.271	-0.025	0.1431	0.0093	1.9483
1230	0	Extremo 2A	-0.103	-8.319	-0.00662	0.0557	-0.0036	0.9446
1230	0.5	Extremo 2A	-0.103	-0.678	-0.00662	0.0557	-0.00028	3.1938
1230	1	Extremo 2A	-0.103	6.962	-0.00662	0.0557	0.003	1.6228
1231	0	Extremo 1A	-0.803	-7.994	-0.03	0.0671	-0.0176	2.3261
1231	0.5	Extremo 1A	-0.803	-0.354	-0.03	0.0671	-0.0027	4.4132
1231	1	Extremo 1A	-0.803	7.287	-0.03	0.0671	0.0123	2.68
1231	0	Extremo 2A	-0.077	-8.115	-0.00498	0.0296	-0.0027	1.7279
1231	0.5	Extremo 2A	-0.077	-0.475	-0.00498	0.0296	-0.00022	3.8754
1231	1	Extremo 2A	-0.077	7.166	-0.00498	0.0296	0.0023	2.2025
1232	0	Extremo 1A	-0.666	-7.986	-0.032	-0.005	-0.0181	2.771
1232	0.5	Extremo 1A	-0.666	-0.345	-0.032	-0.005	-0.0021	4.8537
1232	1	Extremo 1A	-0.666	7.296	-0.032	-0.005	0.014	3.1161
1232	0	Extremo 2A	-0.057	-7.902	-0.00371	0.0098	-0.002	2.2464
1232	0.5	Extremo 2A	-0.057	-0.262	-0.00371	0.0098	-0.00017	4.2873
1232	1	Extremo 2A	-0.057	7.379	-0.00371	0.0098	0.0017	2.508
1233	0	Extremo 1A	-0.527	-7.968	-0.03	-0.0736	-0.0165	2.9265
1233	0.5	Extremo 1A	-0.527	-0.327	-0.03	-0.0736	-0.0015	5.0002
1233	1	Extremo 1A	-0.527	7.313	-0.03	-0.0736	0.0136	3.2536
1233	0	Extremo 2A	-0.041	-7.689	-0.00275	-0.0095	-0.0015	2.4985
1233	0.5	Extremo 2A	-0.041	-0.049	-0.00275	-0.0095	-0.00013	4.4329
1233	1	Extremo 2A	-0.041	7.592	-0.00275	-0.0095	0.0012	2.5471
1234	0	Extremo 1A	-0.404	-7.919	-0.025	-0.1362	-0.0137	2.8026
1234	0.5	Extremo 1A	-0.404	-0.279	-0.025	-0.1362	-0.001	4.8521
1234	1	Extremo 1A	-0.404	7.362	-0.025	-0.1362	0.0117	3.0813
1234	0	Extremo 2A	-0.03	-7.482	-0.00202	-0.0314	-0.0011	2.478
1234	0.5	Extremo 2A	-0.03	0.159	-0.00202	-0.0314	-9.3E-05	4.3087
1234	1	Extremo 2A	-0.03	7.8	-0.00202	-0.0314	0.00092	2.319
1235	0	Extremo 1A	-0.302	-7.827	-0.021	-0.1863	-0.011	2.4059
1235	0.5	Extremo 1A	-0.302	-0.186	-0.021	-0.1863	-0.00071	4.409
1235	1	Extremo 1A	-0.302	7.455	-0.021	-0.1863	0.0096	2.5919
1235	0	Extremo 2A	-0.022	-7.288	-0.00149	-0.055	-0.00081	2.1758
1235	0.5	Extremo 2A	-0.022	0.352	-0.00149	-0.055	-6.9E-05	3.9097
1235	1	Extremo 2A	-0.022	7.993	-0.00149	-0.055	0.00067	1.8233
1236	0	Extremo 1A	-0.219	-7.681	-0.017	-0.2035	-0.0089	1.7621
1236	0.5	Extremo 1A	-0.219	-0.04	-0.017	-0.2035	-0.00052	3.6922
1236	1	Extremo 1A	-0.219	7.601	-0.017	-0.2035	0.0079	1.802
1236	0	Extremo 2A	-0.015	-7.113	-0.00111	-0.0633	-0.0006	1.6042
1236	0.5	Extremo 2A	-0.015	0.528	-0.00111	-0.0633	-5E-05	3.2504
1236	1	Extremo 2A	-0.015	8.168	-0.00111	-0.0633	0.0005	1.0763
1237	0	Extremo 1A	-0.149	-7.424	-0.014	-0.1377	-0.0075	0.9967
1237	0.5	Extremo 1A	-0.149	0.217	-0.014	-0.1377	-0.00035	2.7985
1237	1	Extremo 1A	-0.149	7.857	-0.014	-0.1377	0.0068	0.7801
1237	0	Extremo 2A	-0.01	-6.905	-0.00087	-0.0065	-0.00047	0.8797
1237	0.5	Extremo 2A	-0.01	0.736	-0.00087	-0.0065	-3.5E-05	2.4219
1237	1	Extremo 2A	-0.01	8.376	-0.00087	-0.0065	0.0004	0.1439
1238	0	Extremo 1A	-0.086	-6.853	-0.013	0.0658	-0.0066	0.4261
1238	0.5	Extremo 1A	-0.086	0.787	-0.013	0.0658	-0.00014	1.9427
1238	1	Extremo 1A	-0.086	8.428	-0.013	0.0658	0.0064	-0.3611
1238	0	Extremo 2A	-0.00608	-6.461	-0.00077	0.174	-0.00041	0.3233
1238	0.5	Extremo 2A	-0.00608	1.18	-0.00077	0.174	-1.9E-05	1.6437
1238	1	Extremo 2A	-0.00608	8.82	-0.00077	0.174	0.00037	-0.8563
1239	0	Extremo 1A	-0.028	-5.537	-0.011	0.3461	-0.0053	0.3388
1239	0.5	Extremo 1A	-0.028	2.104	-0.011	0.3461	0.00023	1.1969
1239	1	Extremo 1A	-0.028	9.745	-0.011	0.3461	0.0058	-1.7653
1239	0	Extremo 2A	-0.00221	-5.344	-0.00071	0.4222	-0.00034	0.2547
1239	0.5	Extremo 2A	-0.00221	2.297	-0.00071	0.4222	8.5E-06	1.0164
1239	1	Extremo 2A	-0.00221	9.938	-0.00071	0.4222	0.00036	-2.0422
1240	0	Extremo 1A	-0.049	9.799	-0.113	2.0697	-0.0255	-0.4529
1240	0.3	Extremo 1A	-0.049	11.885	-0.113	2.0697	0.0083	-3.7056
1240	0.6	Extremo 1A	-0.049	13.971	-0.113	2.0697	0.0421	-7.584
1240	0	Extremo 2A	-0.049	9.799	-0.113	2.0697	-0.0255	-0.4529
1240	0.3	Extremo 2A	-0.049	11.885	-0.113	2.0697	0.0083	-3.7056
1240	0.6	Extremo 2A	-0.049	13.971	-0.113	2.0697	0.0421	-7.584
1241	0	Extremo 1A	-0.51	26.523	-0.525	4.624	-0.2154	-9.9741
1241	0.5	Extremo 1A	-0.51	30.937	-0.525	4.624	0.0472	-24.339
1241	1	Extremo 1A	-0.51	35.351	-0.525	4.624	0.3098	-40.9108
1241	0	Extremo 2A	-0.51	26.523	-0.525	4.624	-0.2154	-9.9741
1241	0.5	Extremo 2A	-0.51	30.937	-0.525	4.624	0.0472	-24.339
1241	1	Extremo 2A	-0.51	35.351	-0.525	4.624	0.3098	-40.9108
1243	0	Extremo 1A	1.745	-35.736	-1.531	-5.2105	-0.5133	-41.5575
1243	0.5	Extremo 1A	1.745	-31.322	-1.531	-5.2105	0.2523	-24.7928
1243	1	Extremo 1A	1.745	-26.908	-1.531	-5.2105	1.0179	-10.2351
1243	0	Extremo 2A	1.745	-35.736	-1.531	-5.2105	-0.5133	-41.5575
1243	0.5	Extremo 2A	1.745	-31.322	-1.531	-5.2105	0.2523	-24.7928
1243	1	Extremo 2A	1.745	-26.908	-1.531	-5.2105	1.0179	-10.2351
1244	0	Extremo 1A	0.159	-14.074	-0.099	-2.1909	0.0278	-7.6681
1244	0.3	Extremo 1A	0.159	-11.988	-0.099	-2.1909	0.0574	-3.7589
1244	0.6	Extremo 1A	0.159	-9.902	-0.099	-2.1909	0.087	-0.4754
1244	0	Extremo 2A	0.159	-14.074	-0.099	-2.1909	0.0278	-7.6681
1244	0.3	Extremo 2A	0.159	-11.988	-0.099	-2.1909	0.0574	-3.7589
1244	0.6	Extremo 2A	0.159	-9.902	-0.099	-2.1909	0.087	-0.4754
1245	0	Extremo 1A	-0.00341	14.083	-0.233	1.2774	-0.0489	0.2145
1245	0.3	Extremo 1A	-0.00341	16.169	-0.233	1.2774	0.021	-4.3233
1245	0.6	Extremo 1A	-0.00341	18.255	-0.233	1.2774	0.091	-9.4869
1245	0	Extremo 2A	-0.00341	14.083	-0.233	1.2774	-0.0489	0.2145
1245	0.3	Extremo 2A	-0.00341	16.169	-0.233	1.2774	0.021	-4.3233
1245	0.6	Extremo 2A	-0.00341	18.255	-0.233	1.2774	0.091	-9.4869
1246	0	Extremo 1A	-0.025	33.024	-0.722	2.8201	-0.3325	-8.4178
1246	0.5	Extremo 1A	-0.025	37.438	-0.722	2.8201	0.0283	-26.0335
1246	1	Extremo 1A	-0.025	41.852	-0.722	2.8201	0.3891	-45.8561
1246	0	Extremo 2A	-0.025	33.024	-0.722	2.8201	-0.3325	-8.4178

1246	0.5	Extremo 2A	-0.025	37.438	-0.722	2.8201	0.0283	-26.0335
1246	1	Extremo 2A	-0.025	41.852	-0.722	2.8201	0.3891	-45.8561
1248	0	Extremo 1A	0.385	-42.371	-2.448	-3.3084	-0.964	-46.361
1248	0.5	Extremo 1A	0.385	-37.957	-2.448	-3.3084	0.2601	-26.2791
1248	1	Extremo 1A	0.385	-33.543	-2.448	-3.3084	1.4841	-8.4043
1248	0	Extremo 2A	0.385	-42.371	-2.448	-3.3084	-0.964	-46.361
1248	0.5	Extremo 2A	0.385	-37.957	-2.448	-3.3084	0.2601	-26.2791
1248	1	Extremo 2A	0.385	-33.543	-2.448	-3.3084	1.4841	-8.4043
1249	0	Extremo 1A	0.042	-18.33	-0.612	-1.3877	-0.1903	-9.5263
1249	0.3	Extremo 1A	0.042	-16.244	-0.612	-1.3877	-0.0068	-4.3402
1249	0.6	Extremo 1A	0.042	-14.158	-0.612	-1.3877	0.1768	0.2202
1249	0	Extremo 2A	0.042	-18.33	-0.612	-1.3877	-0.1903	-9.5263
1249	0.3	Extremo 2A	0.042	-16.244	-0.612	-1.3877	-0.0068	-4.3402
1249	0.6	Extremo 2A	0.042	-14.158	-0.612	-1.3877	0.1768	0.2202
1250	0	Extremo 1A	0.00948	14.734	-0.219	0.477	-0.0467	0.1576
1250	0.3	Extremo 1A	0.00948	16.82	-0.219	0.477	0.019	-4.5755
1250	0.6	Extremo 1A	0.00948	18.906	-0.219	0.477	0.0847	-9.9343
1250	0	Extremo 2A	0.00948	14.734	-0.219	0.477	-0.0467	0.1576
1250	0.3	Extremo 2A	0.00948	16.82	-0.219	0.477	0.019	-4.5755
1250	0.6	Extremo 2A	0.00948	18.906	-0.219	0.477	0.0847	-9.9343
1251	0	Extremo 1A	0.098	35.465	-0.689	0.6658	-0.3272	-8.986
1251	0.5	Extremo 1A	0.098	39.88	-0.689	0.6658	0.0172	-27.8223
1251	1	Extremo 1A	0.098	44.294	-0.689	0.6658	0.3617	-48.8656
1251	0	Extremo 2A	0.098	35.465	-0.689	0.6658	-0.3272	-8.986
1251	0.5	Extremo 2A	0.098	39.88	-0.689	0.6658	0.0172	-27.8223
1251	1	Extremo 2A	0.098	44.294	-0.689	0.6658	0.3617	-48.8656
1253	0	Extremo 1A	-0.125	-44.471	-2.772	-1.0538	-1.2124	-49.0114
1253	0.5	Extremo 1A	-0.125	-40.057	-2.772	-1.0538	0.1734	-27.8794
1253	1	Extremo 1A	-0.125	-35.643	-2.772	-1.0538	1.5592	-8.9544
1253	0	Extremo 2A	-0.125	-44.471	-2.772	-1.0538	-1.2124	-49.0114
1253	0.5	Extremo 2A	-0.125	-40.057	-2.772	-1.0538	0.1734	-27.8794
1253	1	Extremo 2A	-0.125	-35.643	-2.772	-1.0538	1.5592	-8.9544
1254	0	Extremo 1A	-0.00962	-18.924	-0.74	-0.5571	-0.2502	-9.9393
1254	0.3	Extremo 1A	-0.00962	-16.838	-0.74	-0.5571	-0.0283	-4.5751
1254	0.6	Extremo 1A	-0.00962	-14.752	-0.74	-0.5571	0.1937	0.1634
1254	0	Extremo 2A	-0.00962	-18.924	-0.74	-0.5571	-0.2502	-9.9393
1254	0.3	Extremo 2A	-0.00962	-16.838	-0.74	-0.5571	-0.0283	-4.5751
1254	0.6	Extremo 2A	-0.00962	-14.752	-0.74	-0.5571	0.1937	0.1634
1255	0	Extremo 1A	0.00929	14.976	-0.173	0.1112	-0.0378	0.0582
1255	0.3	Extremo 1A	0.00929	17.062	-0.173	0.1112	0.0141	-4.7474
1255	0.6	Extremo 1A	0.00929	19.148	-0.173	0.1112	0.066	-10.1789
1255	0	Extremo 2A	0.00929	14.976	-0.173	0.1112	-0.0378	0.0582
1255	0.3	Extremo 2A	0.00929	17.062	-0.173	0.1112	0.0141	-4.7474
1255	0.6	Extremo 2A	0.00929	19.148	-0.173	0.1112	0.066	-10.1789
1256	0	Extremo 1A	0.094	35.483	-0.575	-0.0162	-0.2739	-9.8782
1256	0.5	Extremo 1A	0.094	39.897	-0.575	-0.0162	0.0138	-28.7233
1256	1	Extremo 1A	0.094	44.311	-0.575	-0.0162	0.3015	-49.7755
1256	0	Extremo 2A	0.094	35.483	-0.575	-0.0162	-0.2739	-9.8782
1256	0.5	Extremo 2A	0.094	39.897	-0.575	-0.0162	0.0138	-28.7233
1256	1	Extremo 2A	0.094	44.311	-0.575	-0.0162	0.3015	-49.7755
1258	0	Extremo 1A	-0.312	-43.996	-2.611	-0.3803	-1.2178	-49.4131
1258	0.5	Extremo 1A	-0.312	-39.582	-2.611	-0.3803	0.0876	-28.5185
1258	1	Extremo 1A	-0.312	-35.168	-2.611	-0.3803	1.3929	-9.8309
1258	0	Extremo 2A	-0.312	-43.996	-2.611	-0.3803	-1.2178	-49.4131
1258	0.5	Extremo 2A	-0.312	-39.582	-2.611	-0.3803	0.0876	-28.5185
1258	1	Extremo 2A	-0.312	-35.168	-2.611	-0.3803	1.3929	-9.8309
1259	0	Extremo 1A	-0.029	-19.095	-0.694	-0.1835	-0.2413	-10.1447
1259	0.3	Extremo 1A	-0.029	-17.009	-0.694	-0.1835	-0.033	-4.7291
1259	0.6	Extremo 1A	-0.029	-14.923	-0.694	-0.1835	0.1753	0.0607
1259	0	Extremo 2A	-0.029	-19.095	-0.694	-0.1835	-0.2413	-10.1447
1259	0.3	Extremo 2A	-0.029	-17.009	-0.694	-0.1835	-0.033	-4.7291
1259	0.6	Extremo 2A	-0.029	-14.923	-0.694	-0.1835	0.1753	0.0607
1260	0	Extremo 1A	0.00711	15.054	-0.135	0.0428	-0.0298	-0.0033
1260	0.3	Extremo 1A	0.00711	17.14	-0.135	0.0428	0.0106	-4.8325
1260	0.6	Extremo 1A	0.00711	19.226	-0.135	0.0428	0.0511	-10.2874
1260	0	Extremo 2A	0.00711	15.054	-0.135	0.0428	-0.0298	-0.0033
1260	0.3	Extremo 2A	0.00711	17.14	-0.135	0.0428	0.0106	-4.8325
1260	0.6	Extremo 2A	0.00711	19.226	-0.135	0.0428	0.0511	-10.2874
1261	0	Extremo 1A	0.072	35.182	-0.463	-0.065	-0.2186	-10.3415
1261	0.5	Extremo 1A	0.072	39.596	-0.463	-0.065	0.0131	-29.036
1261	1	Extremo 1A	0.072	44.01	-0.463	-0.065	0.2448	-49.9374
1261	0	Extremo 2A	0.072	35.182	-0.463	-0.065	-0.2186	-10.3415
1261	0.5	Extremo 2A	0.072	39.596	-0.463	-0.065	0.0131	-29.036
1261	1	Extremo 2A	0.072	44.01	-0.463	-0.065	0.2448	-49.9374
1263	0	Extremo 1A	-0.333	-43.463	-2.228	-0.1828	-1.0827	-49.2556
1263	0.5	Extremo 1A	-0.333	-39.049	-2.228	-0.1828	0.0316	-28.6275
1263	1	Extremo 1A	-0.333	-34.635	-2.228	-0.1828	1.1458	-10.2063
1263	0	Extremo 2A	-0.333	-43.463	-2.228	-0.1828	-1.0827	-49.2556
1263	0.5	Extremo 2A	-0.333	-39.049	-2.228	-0.1828	0.0316	-28.6275
1263	1	Extremo 2A	-0.333	-34.635	-2.228	-0.1828	1.1458	-10.2063
1264	0	Extremo 1A	-0.031	-19.119	-0.592	-0.0851	-0.2094	-10.2153
1264	0.3	Extremo 1A	-0.031	-17.033	-0.592	-0.0851	-0.0318	-4.7925
1264	0.6	Extremo 1A	-0.031	-14.947	-0.592	-0.0851	0.1458	0.0045
1264	0	Extremo 2A	-0.031	-19.119	-0.592	-0.0851	-0.2094	-10.2153
1264	0.3	Extremo 2A	-0.031	-17.033	-0.592	-0.0851	-0.0318	-4.7925
1264	0.6	Extremo 2A	-0.031	-14.947	-0.592	-0.0851	0.1458	0.0045
1265	0	Extremo 1A	0.00554	15.102	-0.107	0.1115	-0.0236	-0.0363
1265	0.3	Extremo 1A	0.00554	17.188	-0.107	0.1115	0.0085	-4.8797
1265	0.6	Extremo 1A	0.00554	19.273	-0.107	0.1115	0.0406	-10.3488
1265	0	Extremo 2A	0.00554	15.102	-0.107	0.1115	-0.0236	-0.0363
1265	0.3	Extremo 2A	0.00554	17.188	-0.107	0.1115	0.0085	-4.8797
1265	0.6	Extremo 2A	0.00554	19.273	-0.107	0.1115	0.0406	-10.3488
1266	0	Extremo 1A	0.057	35.086	-0.37	0.0358	-0.1725	-10.5795
1266	0.5	Extremo 1A	0.057	39.5	-0.37	0.0358	0.0125	-29.2258
1266	1	Extremo 1A	0.057	43.914	-0.37	0.0358	0.1976	-50.0792
1266	0	Extremo 2A	0.057	35.086	-0.37	0.0358	-0.1725	-10.5795
1266	0.5	Extremo 2A	0.057	39.5	-0.37	0.0358	0.0125	-29.2258
1266	1	Extremo 2A	0.057	43.914	-0.37	0.0358	0.1976	-50.0792
1268	0	Extremo 1A	-0.294	-43.31	-1.805	0.0075	-0.9017	-49.3047
1268	0.5	Extremo 1A	-0.294	-38.896	-1.805	0.0075	0.00096	-28.7533
1268	1	Extremo 1A	-0.294	-34.482	-1.805	0.0075	0.9037	-10.409
1268	0	Extremo 2A	-0.294	-43.31	-1.805	0.0075	-0.9017	-49.3047
1268	0.5	Extremo 2A	-0.294	-38.896	-1.805	0.0075	0.00096	-28.7533
1268	1	Extremo 2A	-0.294	-34.482	-1.805	0.0075	0.9037	-10.409
1269	0	Extremo 1A	-0.028	-19.149	-0.483	-0.093	-0.1737	-10.2642
1269	0.3	Extremo 1A	-0.028	-17.063	-0.483	-0.093	-0.0286	-4.8324
1269	0.6	Extremo 1A	-0.028	-14.977	-0.483	-0.093	0.1164	-0.0264
1269	0	Extremo 2A	-0.028	-19.149	-0.483	-0.093	-0.1737	-10.2642
1269	0.3	Extremo 2A	-0.028	-17.063	-0.483	-0.093	-0.0286	-4.8324
1269	0.6	Extremo 2A	-0.028	-14.977	-0.483	-0.093	0.1164	-0.0264
1270	0	Extremo 1A	0.00451	15.187	-0.085	0.2772	-0.0186	-0.0623
1270	0.3	Extremo 1A	0.00451	17.273	-0.085	0.2772	0.007	-4.9313
1270	0.6	Extremo 1A	0.00451	19.359	-0.085	0.2772	0.0325	-10.4261
1270	0	Extremo 2A	0.00451	15.187	-0.085	0.2772	-0.0186	-0.0623
1270	0.3	Extremo 2A	0.00451	17.273	-0.085	0.2772	0.007	-4.9313
1270	0.6	Extremo 2A	0.00451	19.359	-0.085	0.2772	0.0325	-10.4261
1271	0	Extremo 1A	0.046	35.241	-0.293	0.3122	-0.1351	-10.8274
1271	0.5	Extremo 1A	0.046	39.655	-0.293	0.3122	0.0116	-29.5516
1271	1	Extremo 1A	0.046	44.07	-0.293	0.3122	0.1583	-50.4828
1271	0	Extremo 2A	0.046	35.241	-0.293	0.3122	-0.1351	-10.8274
1271	0.5	Extremo 2A	0.046	39.655	-0.293	0.3122	0.0116	-29.5516
1271	1	Extremo 2A	0.046	44.07	-0.293	0.3122	0.1583	-50.4828
1273	0	Extremo 1A	-0.243	-43.477	-1.42	0.0133	-0.7231	-49.814
1273	0.5	Extremo 1A	-0.243	-39.063	-1.42	0.0133	-0.0129	-29.179
1273	1	Extremo 1A	-0.243	-34.649	-1.42	0.0133	0.6973	-10.7511
1273	0	Extremo 2A	-0.243	-43.477	-1.42	0.0133	-0.7231	-49.814
1273	0.5	Extremo 2A	-0.243	-39.063	-1.42	0.0133	-0.0129	-29.179
1273	1	Extremo 2A	-0.243	-34.649	-1.42	0.0133	0.6973	-10.7511
1274	0	Extremo 1A	-0.023	-19.259	-0.385	-0.2092	-0.1402	-10.3671
1274	0.3	Extremo 1A	-0.023	-17.173	-0.385	-0.2092	-0.0247	-4.9023
1274	0.6	Extremo 1A	-0.023	-15.087	-0.385	-0.2092	0.0909	-0.0633
1274	0	Extremo 2A	-0.023	-19.259	-0.385	-0.2092	-0.1402	-10.3671
1274	0.3	Extremo 2A	-0.023	-17.173	-0.385	-0.2092	-0.0247	-4.9023
1274	0.6	Extremo 2A	-0.023	-15.087	-0.385	-0.2092	0.0909	-0.0633
1275	0	Extremo 1A	0.00371	15.336	-0.067	0.5459	-0.0145	-0.07
1275	0.3	Extremo 1A	0.00371	17.422	-0.067	0.5459	0.0057	-4.9836
1275	0.6	Extremo 1A	0.00371	19.508	-0.067	0.5459	0.0259	-10.523
1275	0	Extremo 2A	0.00371	15.336	-0.067	0.5459	-0.0145	-0.07
1275	0.3	Extremo 2A	0.00371	17.422	-0.067	0.5459	0.0057	-4.9836
1275	0.6	Extremo 2A	0.00371	19.508	-0.067	0.5459	0.0259	-10.523
1276	0	Extremo 1A	0.038	35.91	-0.23	0.9849	-0.1046	-11.0336
1276	0.5	Extremo 1A	0.038	40.324	-0.23	0.9849	0.0104	-30.0921
1276	1	Extremo 1A	0.038	44.738	-0.23	0.9849	0.1255	-51.3576
1276	0	Extremo 2A	0.038	35.91	-0.23	0.9849	-0.1046	-11.0336

1276	0.5	Extremo 2A	0.038	40.324	-0.23	0.9849	0.0104	-30.0921
1276	1	Extremo 2A	0.038	44.738	-0.23	0.9849	0.1255	-51.3576
1278	0	Extremo 1A	-0.194	-44.286	-1.098	-0.5898	-0.5663	-51.0601
1278	0.5	Extremo 1A	-0.194	-39.872	-1.098	-0.5898	-0.0173	-30.0208
1278	1	Extremo 1A	-0.194	-35.457	-1.098	-0.5898	0.5317	-11.1886
1278	0	Extremo 2A	-0.194	-44.286	-1.098	-0.5898	-0.5663	-51.0601
1278	0.5	Extremo 2A	-0.194	-39.872	-1.098	-0.5898	-0.0173	-30.0208
1278	1	Extremo 2A	-0.194	-35.457	-1.098	-0.5898	0.5317	-11.1886
1279	0	Extremo 1A	-0.019	-19.485	-0.302	-0.5012	-0.111	-10.5328
1279	0.3	Extremo 1A	-0.019	-17.399	-0.302	-0.5012	-0.0205	-5.0003
1279	0.6	Extremo 1A	-0.019	-15.313	-0.302	-0.5012	0.07	-0.0936
1279	0	Extremo 2A	-0.019	-19.485	-0.302	-0.5012	-0.111	-10.5328
1279	0.3	Extremo 2A	-0.019	-17.399	-0.302	-0.5012	-0.0205	-5.0003
1279	0.6	Extremo 2A	-0.019	-15.313	-0.302	-0.5012	0.07	-0.0936
1280	0	Extremo 1A	0.00301	15.491	-0.053	0.8045	-0.0112	-0.0076
1280	0.3	Extremo 1A	0.00301	17.577	-0.053	0.8045	0.0046	-4.9678
1280	0.6	Extremo 1A	0.00301	19.663	-0.053	0.8045	0.0203	-10.5538
1280	0	Extremo 2A	0.00301	15.491	-0.053	0.8045	-0.0112	-0.0076
1280	0.3	Extremo 2A	0.00301	17.577	-0.053	0.8045	0.0046	-4.9678
1280	0.6	Extremo 2A	0.00301	19.663	-0.053	0.8045	0.0203	-10.5538
1281	0	Extremo 1A	0.031	37.552	-0.178	2.0537	-0.08	-10.7228
1281	0.5	Extremo 1A	0.031	41.966	-0.178	2.0537	0.0091	-30.6023
1281	1	Extremo 1A	0.031	46.38	-0.178	2.0537	0.0982	-52.6888
1281	0	Extremo 2A	0.031	37.552	-0.178	2.0537	-0.08	-10.7228
1281	0.5	Extremo 2A	0.031	41.966	-0.178	2.0537	0.0091	-30.6023
1281	1	Extremo 2A	0.031	46.38	-0.178	2.0537	0.0982	-52.6888
1283	0	Extremo 1A	-0.151	-46.501	-0.839	-2.0251	-0.4366	-53.1879
1283	0.5	Extremo 1A	-0.151	-42.087	-0.839	-2.0251	-0.017	-31.041
1283	1	Extremo 1A	-0.151	-37.673	-0.839	-2.0251	0.4026	-11.1012
1283	0	Extremo 2A	-0.151	-46.501	-0.839	-2.0251	-0.4366	-53.1879
1283	0.5	Extremo 2A	-0.151	-42.087	-0.839	-2.0251	-0.017	-31.041
1283	1	Extremo 2A	-0.151	-37.673	-0.839	-2.0251	0.4026	-11.1012
1284	0	Extremo 1A	-0.015	-19.775	-0.233	-0.8923	-0.0864	-10.6583
1284	0.3	Extremo 1A	-0.015	-17.689	-0.233	-0.8923	-0.0165	-5.0387
1284	0.6	Extremo 1A	-0.015	-15.603	-0.233	-0.8923	0.0535	-0.0449
1284	0	Extremo 2A	-0.015	-19.775	-0.233	-0.8923	-0.0864	-10.6583
1284	0.3	Extremo 2A	-0.015	-17.689	-0.233	-0.8923	-0.0165	-5.0387
1284	0.6	Extremo 2A	-0.015	-15.603	-0.233	-0.8923	0.0535	-0.0449
1285	0	Extremo 1A	0.0024	15.457	-0.041	0.6747	-0.0085	0.1367
1285	0.3	Extremo 1A	0.0024	17.543	-0.041	0.6747	0.0036	-4.8131
1285	0.6	Extremo 1A	0.0024	19.628	-0.041	0.6747	0.0158	-10.3888
1285	0	Extremo 2A	0.0024	15.457	-0.041	0.6747	-0.0085	0.1367
1285	0.3	Extremo 2A	0.0024	17.543	-0.041	0.6747	0.0036	-4.8131
1285	0.6	Extremo 2A	0.0024	19.628	-0.041	0.6747	0.0158	-10.3888
1286	0	Extremo 1A	0.024	39.515	-0.136	2.3712	-0.0604	-9.4677
1286	0.5	Extremo 1A	0.024	43.929	-0.136	2.3712	0.0078	-30.3285
1286	1	Extremo 1A	0.024	48.343	-0.136	2.3712	0.0759	-53.3964
1286	0	Extremo 2A	0.024	39.515	-0.136	2.3712	-0.0604	-9.4677
1286	0.5	Extremo 2A	0.024	43.929	-0.136	2.3712	0.0078	-30.3285
1286	1	Extremo 2A	0.024	48.343	-0.136	2.3712	0.0759	-53.3964
1288	0	Extremo 1A	-0.116	-49.649	-0.637	-3.0472	-0.3332	-54.9798
1288	0.5	Extremo 1A	-0.116	-45.235	-0.637	-3.0472	-0.0147	-31.2588
1288	1	Extremo 1A	-0.116	-40.821	-0.637	-3.0472	0.3037	-9.7448
1288	0	Extremo 2A	-0.116	-49.649	-0.637	-3.0472	-0.3332	-54.9798
1288	0.5	Extremo 2A	-0.116	-45.235	-0.637	-3.0472	-0.0147	-31.2588
1288	1	Extremo 2A	-0.116	-40.821	-0.637	-3.0472	0.3037	-9.7448
1289	0	Extremo 1A	-0.011	-19.871	-0.179	-0.9228	-0.0665	-10.5489
1289	0.3	Extremo 1A	-0.011	-17.785	-0.179	-0.9228	-0.013	-4.9004
1289	0.6	Extremo 1A	-0.011	-15.699	-0.179	-0.9228	0.0406	0.1222
1289	0	Extremo 2A	-0.011	-19.871	-0.179	-0.9228	-0.0665	-10.5489
1289	0.3	Extremo 2A	-0.011	-17.785	-0.179	-0.9228	-0.013	-4.9004
1289	0.6	Extremo 2A	-0.011	-15.699	-0.179	-0.9228	0.0406	0.1222
1290	0	Extremo 1A	0.00188	15.26	-0.031	-0.1104	-0.0064	0.1881
1290	0.3	Extremo 1A	0.00188	17.346	-0.031	-0.1104	0.0028	-4.7028
1290	0.6	Extremo 1A	0.00188	19.432	-0.031	-0.1104	0.0121	-10.2194
1290	0	Extremo 2A	0.00188	15.26	-0.031	-0.1104	-0.0064	0.1881
1290	0.3	Extremo 2A	0.00188	17.346	-0.031	-0.1104	0.0028	-4.7028
1290	0.6	Extremo 2A	0.00188	19.432	-0.031	-0.1104	0.0121	-10.2194
1291	0	Extremo 1A	0.019	38.563	-0.103	-0.2956	-0.045	-8.8108
1291	0.5	Extremo 1A	0.019	42.977	-0.103	-0.2956	0.0065	-29.196
1291	1	Extremo 1A	0.019	47.391	-0.103	-0.2956	0.058	-51.7882
1291	0	Extremo 2A	0.019	38.563	-0.103	-0.2956	-0.045	-8.8108
1291	0.5	Extremo 2A	0.019	42.977	-0.103	-0.2956	0.0065	-29.196
1291	1	Extremo 2A	0.019	47.391	-0.103	-0.2956	0.058	-51.7882
1293	0	Extremo 1A	-0.089	-49.135	-0.481	-0.5621	-0.2525	-53.6483
1293	0.5	Extremo 1A	-0.089	-44.721	-0.481	-0.5621	-0.012	-30.1844
1293	1	Extremo 1A	-0.089	-40.307	-0.481	-0.5621	0.2286	-8.9274
1293	0	Extremo 2A	-0.089	-49.135	-0.481	-0.5621	-0.2525	-53.6483
1293	0.5	Extremo 2A	-0.089	-44.721	-0.481	-0.5621	-0.012	-30.1844
1293	1	Extremo 2A	-0.089	-40.307	-0.481	-0.5621	0.2286	-8.9274
1294	0	Extremo 1A	-0.00866	-19.701	-0.136	-0.1642	-0.0508	-10.3768
1294	0.3	Extremo 1A	-0.00866	-17.615	-0.136	-0.1642	-0.01	-4.7795
1294	0.6	Extremo 1A	-0.00866	-15.529	-0.136	-0.1642	0.0307	0.192
1294	0	Extremo 2A	-0.00866	-19.701	-0.136	-0.1642	-0.0508	-10.3768
1294	0.3	Extremo 2A	-0.00866	-17.615	-0.136	-0.1642	-0.01	-4.7795
1294	0.6	Extremo 2A	-0.00866	-15.529	-0.136	-0.1642	0.0307	0.192
1295	0	Extremo 1A	0.00146	15.463	-0.023	-0.8917	-0.0048	0.1349
1295	0.3	Extremo 1A	0.00146	17.549	-0.023	-0.8917	0.0022	-4.817
1295	0.6	Extremo 1A	0.00146	19.635	-0.023	-0.8917	0.0092	-10.3946
1295	0	Extremo 2A	0.00146	15.463	-0.023	-0.8917	-0.0048	0.1349
1295	0.3	Extremo 2A	0.00146	17.549	-0.023	-0.8917	0.0022	-4.817
1295	0.6	Extremo 2A	0.00146	19.635	-0.023	-0.8917	0.0092	-10.3946
1296	0	Extremo 1A	0.015	39.531	-0.077	-2.9512	-0.0331	-9.4856
1296	0.5	Extremo 1A	0.015	43.945	-0.077	-2.9512	0.0053	-30.3546
1296	1	Extremo 1A	0.015	48.359	-0.077	-2.9512	0.0438	-53.4307
1296	0	Extremo 2A	0.015	39.531	-0.077	-2.9512	-0.0331	-9.4856
1296	0.5	Extremo 2A	0.015	43.945	-0.077	-2.9512	0.0053	-30.3546
1296	1	Extremo 2A	0.015	48.359	-0.077	-2.9512	0.0438	-53.4307
1298	0	Extremo 1A	-0.067	-49.657	-0.363	1.9195	-0.1906	-54.9907
1298	0.5	Extremo 1A	-0.067	-45.243	-0.363	1.9195	-0.0093	-31.2657
1298	1	Extremo 1A	-0.067	-40.829	-0.363	1.9195	0.1719	-9.7478
1298	0	Extremo 2A	-0.067	-49.657	-0.363	1.9195	-0.1906	-54.9907
1298	0.5	Extremo 2A	-0.067	-45.243	-0.363	1.9195	-0.0093	-31.2657
1298	1	Extremo 2A	-0.067	-40.829	-0.363	1.9195	0.1719	-9.7478
1299	0	Extremo 1A	-0.00657	-19.873	-0.103	0.5938	-0.0385	-10.5501
1299	0.3	Extremo 1A	-0.00657	-17.787	-0.103	0.5938	-0.0077	-4.9011
1299	0.6	Extremo 1A	-0.00657	-15.701	-0.103	0.5938	0.0231	0.122
1299	0	Extremo 2A	-0.00657	-19.873	-0.103	0.5938	-0.0385	-10.5501
1299	0.3	Extremo 2A	-0.00657	-17.787	-0.103	0.5938	-0.0077	-4.9011
1299	0.6	Extremo 2A	-0.00657	-15.701	-0.103	0.5938	0.0231	0.122
1300	0	Extremo 1A	0.00111	15.505	-0.017	-1.01	-0.0035	-0.0113
1300	0.3	Extremo 1A	0.00111	17.59	-0.017	-1.01	0.0017	-4.9755
1300	0.6	Extremo 1A	0.00111	19.676	-0.017	-1.01	0.0069	-10.5655
1300	0	Extremo 2A	0.00111	15.505	-0.017	-1.01	-0.0035	-0.0113
1300	0.3	Extremo 2A	0.00111	17.59	-0.017	-1.01	0.0017	-4.9755
1300	0.6	Extremo 2A	0.00111	19.676	-0.017	-1.01	0.0069	-10.5655
1301	0	Extremo 1A	0.011	37.588	-0.057	-2.5992	-0.024	-10.7584
1301	0.5	Extremo 1A	0.011	42.002	-0.057	-2.5992	0.0043	-30.656
1301	1	Extremo 1A	0.011	46.416	-0.057	-2.5992	0.0327	-52.7607
1301	0	Extremo 2A	0.011	37.588	-0.057	-2.5992	-0.024	-10.7584
1301	0.5	Extremo 2A	0.011	42.002	-0.057	-2.5992	0.0043	-30.656
1301	1	Extremo 2A	0.011	46.416	-0.057	-2.5992	0.0327	-52.7607
1303	0	Extremo 1A	-0.051	-46.518	-0.273	0.8882	-0.1435	-53.2075
1303	0.5	Extremo 1A	-0.051	-42.104	-0.273	0.8882	-0.0071	-31.0518
1303	1	Extremo 1A	-0.051	-37.69	-0.273	0.8882	0.1293	-11.1032
1303	0	Extremo 2A	-0.051	-46.518	-0.273	0.8882	-0.1435	-53.2075
1303	0.5	Extremo 2A	-0.051	-42.104	-0.273	0.8882	-0.0071	-31.0518
1303	1	Extremo 2A	-0.051	-37.69	-0.273	0.8882	0.1293	-11.1032
1304	0	Extremo 1A	-0.00496	-19.778	-0.077	0.562	-0.0291	-10.6597
1304	0.3	Extremo 1A	-0.00496	-17.692	-0.077	0.562	-0.0058	-5.0393
1304	0.6	Extremo 1A	-0.00496	-15.606	-0.077	0.562	0.0174	-0.0447
1304	0	Extremo 2A	-0.00496	-19.778	-0.077	0.562	-0.0291	-10.6597
1304	0.3	Extremo 2A	-0.00496	-17.692	-0.077	0.562	-0.0058	-5.0393
1304	0.6	Extremo 2A	-0.00496	-15.606	-0.077	0.562	0.0174	-0.0447
1305	0	Extremo 1A	0.00084	15.357	-0.013	-0.7326	-0.0026	-0.0752
1305	0.3	Extremo 1A	0.00084	17.443	-0.013	-0.7326	0.0013	-4.995
1305	0.6	Extremo 1A	0.00084	19.528	-0.013	-0.7326	0.0051	-10.5407
1305	0	Extremo 2A	0.00084	15.357	-0.013	-0.7326	-0.0026	-0.0752
1305	0.3	Extremo 2A	0.00084	17.443	-0.013	-0.7326	0.0013	-4.995
1305	0.6	Extremo 2A	0.00084	19.528	-0.013	-0.7326	0.0051	-10.5407
1306	0	Extremo 1A	0.00843	35.972	-0.041	-1.4713	-0.0172	-11.0852
1306	0.5	Extremo 1A	0.00843	40.386	-0.041	-1.4713	0.0035	-30.1746
1306	1	Extremo 1A	0.00843	44.8	-0.041	-1.4713	0.0242	-51.4711
1306	0	Extremo 2A	0.00843	35.972	-0.041	-1.4713	-0.0172	-11.0852

1306	0.5	Extremo 2A	0.00843	40.386	-0.041	-1.4713	0.0035	-30.1746
1306	1	Extremo 2A	0.00843	44.8	-0.041	-1.4713	0.0242	-51.4711
1308	0	Extremo 1A	-0.038	-44.316	-0.205	-0.5572	-0.1079	-51.0798
1308	0.5	Extremo 1A	-0.038	-39.901	-0.205	-0.5572	-0.0053	-30.0256
1308	1	Extremo 1A	-0.038	-35.487	-0.205	-0.5572	0.0972	-11.1784
1308	0	Extremo 2A	-0.038	-44.316	-0.205	-0.5572	-0.1079	-51.0798
1308	0.5	Extremo 2A	-0.038	-39.901	-0.205	-0.5572	-0.0053	-30.0256
1308	1	Extremo 2A	-0.038	-35.487	-0.205	-0.5572	0.0972	-11.1784
1309	0	Extremo 1A	-0.00374	-19.486	-0.058	0.172	-0.0219	-10.5316
1309	0.3	Extremo 1A	-0.00374	-17.4	-0.058	0.172	-0.0044	-4.9987
1309	0.6	Extremo 1A	-0.00374	-15.314	-0.058	0.172	0.0131	-0.0916
1309	0	Extremo 2A	-0.00374	-19.486	-0.058	0.172	-0.0219	-10.5316
1309	0.3	Extremo 2A	-0.00374	-17.4	-0.058	0.172	-0.0044	-4.9987
1309	0.6	Extremo 2A	-0.00374	-15.314	-0.058	0.172	0.0131	-0.0916
1310	0	Extremo 1A	0.00062	15.214	-0.00936	-0.4393	-0.0018	-0.0688
1310	0.3	Extremo 1A	0.00062	17.3	-0.00936	-0.4393	0.00098	-4.946
1310	0.6	Extremo 1A	0.00062	19.386	-0.00936	-0.4393	0.0038	-10.449
1310	0	Extremo 2A	0.00062	15.214	-0.00936	-0.4393	-0.0018	-0.0688
1310	0.3	Extremo 2A	0.00062	17.3	-0.00936	-0.4393	0.00098	-4.946
1310	0.6	Extremo 2A	0.00062	19.386	-0.00936	-0.4393	0.0038	-10.449
1311	0	Extremo 1A	0.00627	35.331	-0.03	-0.7188	-0.0122	-10.8908
1311	0.5	Extremo 1A	0.00627	39.745	-0.03	-0.7188	0.0028	-29.66
1311	1	Extremo 1A	0.00627	44.159	-0.03	-0.7188	0.0177	-50.6361
1311	0	Extremo 2A	0.00627	35.331	-0.03	-0.7188	-0.0122	-10.8908
1311	0.5	Extremo 2A	0.00627	39.745	-0.03	-0.7188	0.0028	-29.66
1311	1	Extremo 2A	0.00627	44.159	-0.03	-0.7188	0.0177	-50.6361
1313	0	Extremo 1A	-0.029	-43.517	-0.154	-1.1535	-0.0811	-49.8091
1313	0.5	Extremo 1A	-0.029	-39.103	-0.154	-1.1535	-0.0039	-29.154
1313	1	Extremo 1A	-0.029	-34.689	-0.154	-1.1535	0.0732	-10.7059
1313	0	Extremo 2A	-0.029	-43.517	-0.154	-1.1535	-0.0811	-49.8091
1313	0.5	Extremo 2A	-0.029	-39.103	-0.154	-1.1535	-0.0039	-29.154
1313	1	Extremo 2A	-0.029	-34.689	-0.154	-1.1535	0.0732	-10.7059
1314	0	Extremo 1A	-0.00281	-19.253	-0.044	-0.1091	-0.0165	-10.3574
1314	0.3	Extremo 1A	-0.00281	-17.167	-0.044	-0.1091	-0.0033	-4.8944
1314	0.6	Extremo 1A	-0.00281	-15.081	-0.044	-0.1091	0.0099	-0.0572
1314	0	Extremo 2A	-0.00281	-19.253	-0.044	-0.1091	-0.0165	-10.3574
1314	0.3	Extremo 2A	-0.00281	-17.167	-0.044	-0.1091	-0.0033	-4.8944
1314	0.6	Extremo 2A	-0.00281	-15.081	-0.044	-0.1091	0.0099	-0.0572
1315	0	Extremo 1A	0.00046	15.134	-0.00676	-0.2433	-0.0013	-0.0469
1315	0.3	Extremo 1A	0.00046	17.22	-0.00676	-0.2433	0.00073	-4.9
1315	0.6	Extremo 1A	0.00046	19.306	-0.00676	-0.2433	0.0028	-10.3789
1315	0	Extremo 2A	0.00046	15.134	-0.00676	-0.2433	-0.0013	-0.0469
1315	0.3	Extremo 2A	0.00046	17.22	-0.00676	-0.2433	0.00073	-4.9
1315	0.6	Extremo 2A	0.00046	19.306	-0.00676	-0.2433	0.0028	-10.3789
1316	0	Extremo 1A	0.00461	35.177	-0.021	-0.3587	-0.0085	-10.6639
1316	0.5	Extremo 1A	0.00461	39.591	-0.021	-0.3587	0.0022	-29.3561
1316	1	Extremo 1A	0.00461	44.006	-0.021	-0.3587	0.0128	-50.2553
1316	0	Extremo 2A	0.00461	35.177	-0.021	-0.3587	-0.0085	-10.6639
1316	0.5	Extremo 2A	0.00461	39.591	-0.021	-0.3587	0.0022	-29.3561
1316	1	Extremo 2A	0.00461	44.006	-0.021	-0.3587	0.0128	-50.2553
1318	0	Extremo 1A	-0.022	-43.323	-0.116	-1.079	-0.0609	-49.2137
1318	0.5	Extremo 1A	-0.022	-38.909	-0.116	-1.079	-0.0029	-28.6555
1318	1	Extremo 1A	-0.022	-34.495	-0.116	-1.079	0.0551	-10.3043
1318	0	Extremo 2A	-0.022	-43.323	-0.116	-1.079	-0.0609	-49.2137
1318	0.5	Extremo 2A	-0.022	-38.909	-0.116	-1.079	-0.0029	-28.6555
1318	1	Extremo 2A	-0.022	-34.495	-0.116	-1.079	0.0551	-10.3043
1319	0	Extremo 1A	-0.00211	-19.125	-0.033	-0.193	-0.0124	-10.2386
1319	0.3	Extremo 1A	-0.00211	-17.039	-0.033	-0.193	-0.0025	-4.814
1319	0.6	Extremo 1A	-0.00211	-14.953	-0.033	-0.193	0.0074	-0.0152
1319	0	Extremo 2A	-0.00211	-19.125	-0.033	-0.193	-0.0124	-10.2386
1319	0.3	Extremo 2A	-0.00211	-17.039	-0.033	-0.193	-0.0025	-4.814
1319	0.6	Extremo 2A	-0.00211	-14.953	-0.033	-0.193	0.0074	-0.0152
1320	0	Extremo 1A	0.00034	15.099	-0.00483	-0.1223	-0.0009	-0.0319
1320	0.3	Extremo 1A	0.00034	17.185	-0.00483	-0.1223	0.00055	-4.8746
1320	0.6	Extremo 1A	0.00034	19.271	-0.00483	-0.1223	0.002	-10.3431
1320	0	Extremo 2A	0.00034	15.099	-0.00483	-0.1223	-0.0009	-0.0319
1320	0.3	Extremo 2A	0.00034	17.185	-0.00483	-0.1223	0.00055	-4.8746
1320	0.6	Extremo 2A	0.00034	19.271	-0.00483	-0.1223	0.002	-10.3431
1321	0	Extremo 1A	0.00335	35.166	-0.015	-0.1873	-0.0058	-10.5356
1321	0.5	Extremo 1A	0.00335	39.58	-0.015	-0.1873	0.0017	-29.2221
1321	1	Extremo 1A	0.00335	43.994	-0.015	-0.1873	0.0092	-50.1157
1321	0	Extremo 2A	0.00335	35.166	-0.015	-0.1873	-0.0058	-10.5356
1321	0.5	Extremo 2A	0.00335	39.58	-0.015	-0.1873	0.0017	-29.2221
1321	1	Extremo 2A	0.00335	43.994	-0.015	-0.1873	0.0092	-50.1157
1323	0	Extremo 1A	-0.016	-43.292	-0.087	-0.6842	-0.0458	-48.9669
1323	0.5	Extremo 1A	-0.016	-38.877	-0.087	-0.6842	-0.0021	-28.4247
1323	1	Extremo 1A	-0.016	-34.463	-0.087	-0.6842	0.0416	-10.0894
1323	0	Extremo 2A	-0.016	-43.292	-0.087	-0.6842	-0.0458	-48.9669
1323	0.5	Extremo 2A	-0.016	-38.877	-0.087	-0.6842	-0.0021	-28.4247
1323	1	Extremo 2A	-0.016	-34.463	-0.087	-0.6842	0.0416	-10.0894
1324	0	Extremo 1A	-0.00159	-19.066	-0.025	-0.1466	-0.0093	-10.1781
1324	0.3	Extremo 1A	-0.00159	-16.981	-0.025	-0.1466	-0.0019	-4.7711
1324	0.6	Extremo 1A	-0.00159	-14.895	-0.025	-0.1466	0.0056	0.0102
1324	0	Extremo 2A	-0.00159	-19.066	-0.025	-0.1466	-0.0093	-10.1781
1324	0.3	Extremo 2A	-0.00159	-16.981	-0.025	-0.1466	-0.0019	-4.7711
1324	0.6	Extremo 2A	-0.00159	-14.895	-0.025	-0.1466	0.0056	0.0102
1325	0	Extremo 1A	0.00024	15.087	-0.00341	-0.037	-0.00062	-0.0256
1325	0.3	Extremo 1A	0.00024	17.173	-0.00341	-0.037	0.0004	-4.8647
1325	0.6	Extremo 1A	0.00024	19.259	-0.00341	-0.037	0.0014	-10.3296
1325	0	Extremo 2A	0.00024	15.087	-0.00341	-0.037	-0.00062	-0.0256
1325	0.3	Extremo 2A	0.00024	17.173	-0.00341	-0.037	0.0004	-4.8647
1325	0.6	Extremo 2A	0.00024	19.259	-0.00341	-0.037	0.0014	-10.3296
1326	0	Extremo 1A	0.00241	35.174	-0.01	-0.0788	-0.0038	-10.486
1326	0.5	Extremo 1A	0.00241	39.588	-0.01	-0.0788	0.0013	-29.1763
1326	1	Extremo 1A	0.00241	44.002	-0.01	-0.0788	0.0065	-50.0737
1326	0	Extremo 2A	0.00241	35.174	-0.01	-0.0788	-0.0038	-10.486
1326	0.5	Extremo 2A	0.00241	39.588	-0.01	-0.0788	0.0013	-29.1763
1326	1	Extremo 2A	0.00241	44.002	-0.01	-0.0788	0.0065	-50.0737
1328	0	Extremo 1A	-0.012	-43.289	-0.066	-0.1706	-0.0345	-48.883
1328	0.5	Extremo 1A	-0.012	-38.875	-0.066	-0.1706	-0.0015	-28.342
1328	1	Extremo 1A	-0.012	-34.461	-0.066	-0.1706	0.0314	-10.0081
1328	0	Extremo 2A	-0.012	-43.289	-0.066	-0.1706	-0.0345	-48.883
1328	0.5	Extremo 2A	-0.012	-38.875	-0.066	-0.1706	-0.0015	-28.342
1328	1	Extremo 2A	-0.012	-34.461	-0.066	-0.1706	0.0314	-10.0081
1329	0	Extremo 1A	-0.00119	-19.046	-0.019	-0.04	-0.007	-10.1554
1329	0.3	Extremo 1A	-0.00119	-16.96	-0.019	-0.04	-0.0014	-4.7546
1329	0.6	Extremo 1A	-0.00119	-14.874	-0.019	-0.04	0.0042	0.0204
1329	0	Extremo 2A	-0.00119	-19.046	-0.019	-0.04	-0.007	-10.1554
1329	0.3	Extremo 2A	-0.00119	-16.96	-0.019	-0.04	-0.0014	-4.7546
1329	0.6	Extremo 2A	-0.00119	-14.874	-0.019	-0.04	0.0042	0.0204
1330	0	Extremo 1A	0.00017	15.087	-0.00237	0.0386	-0.00042	-0.0257
1330	0.3	Extremo 1A	0.00017	17.173	-0.00237	0.0386	0.0003	-4.8647
1330	0.6	Extremo 1A	0.00017	19.259	-0.00237	0.0386	0.001	-10.3295
1330	0	Extremo 2A	0.00017	15.087	-0.00237	0.0386	-0.00042	-0.0257
1330	0.3	Extremo 2A	0.00017	17.173	-0.00237	0.0386	0.0003	-4.8647
1330	0.6	Extremo 2A	0.00017	19.259	-0.00237	0.0386	0.001	-10.3295
1331	0	Extremo 1A	0.00171	35.17	-0.00701	0.0147	-0.0025	-10.486
1331	0.5	Extremo 1A	0.00171	39.584	-0.00701	0.0147	0.001	-29.1744
1331	1	Extremo 1A	0.00171	43.998	-0.00701	0.0147	0.0045	-50.0699
1331	0	Extremo 2A	0.00171	35.17	-0.00701	0.0147	-0.0025	-10.486
1331	0.5	Extremo 2A	0.00171	39.584	-0.00701	0.0147	0.001	-29.1744
1331	1	Extremo 2A	0.00171	43.998	-0.00701	0.0147	0.0045	-50.0699
1333	0	Extremo 1A	-0.00914	-43.289	-0.05	0.3688	-0.026	-48.891
1333	0.5	Extremo 1A	-0.00914	-38.875	-0.05	0.3688	-0.0011	-28.3498
1333	1	Extremo 1A	-0.00914	-34.461	-0.05	0.3688	0.0237	-10.0157
1333	0	Extremo 2A	-0.00914	-43.289	-0.05	0.3688	-0.026	-48.891
1333	0.5	Extremo 2A	-0.00914	-38.875	-0.05	0.3688	-0.0011	-28.3498
1333	1	Extremo 2A	-0.00914	-34.461	-0.05	0.3688	0.0237	-10.0157
1334	0	Extremo 1A	-0.0009	-19.048	-0.014	0.0814	-0.0053	-10.1576
1334	0.3	Extremo 1A	-0.0009	-16.962	-0.014	0.0814	-0.001	-4.7562
1334	0.6	Extremo 1A	-0.0009	-14.876	-0.014	0.0814	0.0032	0.0194
1334	0	Extremo 2A	-0.0009	-19.048	-0.014	0.0814	-0.0053	-10.1576
1334	0.3	Extremo 2A	-0.0009	-16.962	-0.014	0.0814	-0.001	-4.7562
1334	0.6	Extremo 2A	-0.0009	-14.876	-0.014	0.0814	0.0032	0.0194
1335	0	Extremo 1A	0.00012	15.099	-0.00162	0.1242	-0.00027	-0.0327
1335	0.3	Extremo 1A	0.00012	17.185	-0.00162	0.1242	0.00022	-4.8753
1335	0.6	Extremo 1A	0.00012	19.271	-0.00162	0.1242	0.0007	-10.3437
1335	0	Extremo 2A	0.00012	15.099	-0.00162	0.1242	-0.00027	-0.0327
1335	0.3	Extremo 2A	0.00012	17.185	-0.00162	0.1242	0.00022	-4.8753
1335	0.6	Extremo 2A	0.00012	19.271	-0.00162	0.1242	0.0007	-10.3437
1336	0	Extremo 1A	0.0012	35.155	-0.00464	0.1178	-0.0015	-10.5394
1336	0.5	Extremo 1A	0.0012	39.569	-0.00464	0.1178	0.00079	-29.2204
1336	1	Extremo 1A	0.0012	43.983	-0.00464	0.1178	0.0031	-50.1084
1336	0	Extremo 2A	0.0012	35.155	-0.00464	0.1178	-0.0015	-10.5394

1336	0.5	Extremo 2A	0.0012	39.569	-0.00464	0.1178	0.00079	-29.2204
1336	1	Extremo 2A	0.0012	43.983	-0.00464	0.1178	0.0031	-50.1084
1338	0	Extremo 1A	-0.00688	-43.293	-0.038	0.8708	-0.0196	-48.9976
1338	0.5	Extremo 1A	-0.00688	-38.879	-0.038	0.8708	-0.00081	-28.4543
1338	1	Extremo 1A	-0.00688	-34.465	-0.038	0.8708	0.018	-10.1181
1338	0	Extremo 2A	-0.00688	-43.293	-0.038	0.8708	-0.0196	-48.9976
1338	0.5	Extremo 2A	-0.00688	-38.879	-0.038	0.8708	-0.00081	-28.4543
1338	1	Extremo 2A	-0.00688	-34.465	-0.038	0.8708	0.018	-10.1181
1339	0	Extremo 1A	-0.00067	-19.074	-0.011	0.1809	-0.004	-10.1863
1339	0.3	Extremo 1A	-0.00067	-16.988	-0.011	0.1809	-0.00078	-4.777
1339	0.6	Extremo 1A	-0.00067	-14.902	-0.011	0.1809	0.0024	0.0065
1339	0	Extremo 2A	-0.00067	-19.074	-0.011	0.1809	-0.004	-10.1863
1339	0.3	Extremo 2A	-0.00067	-16.988	-0.011	0.1809	-0.00078	-4.777
1339	0.6	Extremo 2A	-0.00067	-14.902	-0.011	0.1809	0.0024	0.0065
1340	0	Extremo 1A	8.4E-05	15.138	-0.00109	0.2491	-0.00017	-0.0496
1340	0.3	Extremo 1A	8.4E-05	17.224	-0.00109	0.2491	0.00016	-4.9038
1340	0.6	Extremo 1A	8.4E-05	19.31	-0.00109	0.2491	0.00048	-10.3837
1340	0	Extremo 2A	8.4E-05	15.138	-0.00109	0.2491	-0.00017	-0.0496
1340	0.3	Extremo 2A	8.4E-05	17.224	-0.00109	0.2491	0.00016	-4.9038
1340	0.6	Extremo 2A	8.4E-05	19.31	-0.00109	0.2491	0.00048	-10.3837
1341	0	Extremo 1A	0.00083	35.163	-0.00297	0.2862	-0.00088	-10.6831
1341	0.5	Extremo 1A	0.00083	39.577	-0.00297	0.2862	0.00061	-29.3684
1341	1	Extremo 1A	0.00083	43.992	-0.00297	0.2862	0.0021	-50.2606
1341	0	Extremo 2A	0.00083	35.163	-0.00297	0.2862	-0.00088	-10.6831
1341	0.5	Extremo 2A	0.00083	39.577	-0.00297	0.2862	0.00061	-29.3684
1341	1	Extremo 2A	0.00083	43.992	-0.00297	0.2862	0.0021	-50.2606
1343	0	Extremo 1A	-0.00518	-43.332	-0.028	1.2298	-0.0148	-49.2914
1343	0.5	Extremo 1A	-0.00518	-38.918	-0.028	1.2298	-0.00058	-28.7287
1343	1	Extremo 1A	-0.00518	-34.504	-0.028	1.2298	0.0136	-10.373
1343	0	Extremo 2A	-0.00518	-43.332	-0.028	1.2298	-0.0148	-49.2914
1343	0.5	Extremo 2A	-0.00518	-38.918	-0.028	1.2298	-0.00058	-28.7287
1343	1	Extremo 2A	-0.00518	-34.504	-0.028	1.2298	0.0136	-10.373
1344	0	Extremo 1A	-0.00051	-19.143	-0.00803	0.2077	-0.003	-10.2581
1344	0.3	Extremo 1A	-0.00051	-17.058	-0.00803	0.2077	-0.00059	-4.828
1344	0.6	Extremo 1A	-0.00051	-14.972	-0.00803	0.2077	0.0018	-0.0236
1344	0	Extremo 2A	-0.00051	-19.143	-0.00803	0.2077	-0.003	-10.2581
1344	0.3	Extremo 2A	-0.00051	-17.058	-0.00803	0.2077	-0.00059	-4.828
1344	0.6	Extremo 2A	-0.00051	-14.972	-0.00803	0.2077	0.0018	-0.0236
1345	0	Extremo 1A	5.8E-05	15.229	-0.00071	0.4588	-0.0001	-0.0745
1345	0.3	Extremo 1A	5.8E-05	17.315	-0.00071	0.4588	0.00011	-4.9561
1345	0.6	Extremo 1A	5.8E-05	19.401	-0.00071	0.4588	0.00032	-10.4635
1345	0	Extremo 2A	5.8E-05	15.229	-0.00071	0.4588	-0.0001	-0.0745
1345	0.3	Extremo 2A	5.8E-05	17.315	-0.00071	0.4588	0.00011	-4.9561
1345	0.6	Extremo 2A	5.8E-05	19.401	-0.00071	0.4588	0.00032	-10.4635
1346	0	Extremo 1A	0.00056	35.337	-0.00182	0.6663	-0.00044	-10.9416
1346	0.5	Extremo 1A	0.00056	39.751	-0.00182	0.6663	0.00047	-29.7137
1346	1	Extremo 1A	0.00056	44.165	-0.00182	0.6663	0.0014	-50.6929
1346	0	Extremo 2A	0.00056	35.337	-0.00182	0.6663	-0.00044	-10.9416
1346	0.5	Extremo 2A	0.00056	39.751	-0.00182	0.6663	0.00047	-29.7137
1346	1	Extremo 2A	0.00056	44.165	-0.00182	0.6663	0.0014	-50.6929
1348	0	Extremo 1A	-0.00391	-43.561	-0.022	1.2115	-0.0112	-49.9916
1348	0.5	Extremo 1A	-0.00391	-39.147	-0.022	1.2115	-0.00042	-29.3146
1348	1	Extremo 1A	-0.00391	-34.733	-0.022	1.2115	0.0103	-10.8447
1348	0	Extremo 2A	-0.00391	-43.561	-0.022	1.2115	-0.0112	-49.9916
1348	0.5	Extremo 2A	-0.00391	-39.147	-0.022	1.2115	-0.00042	-29.3146
1348	1	Extremo 2A	-0.00391	-34.733	-0.022	1.2115	0.0103	-10.8447
1349	0	Extremo 1A	-0.00038	-19.294	-0.00607	0.081	-0.0023	-10.3978
1349	0.3	Extremo 1A	-0.00038	-17.208	-0.00607	0.081	-0.00044	-4.9225
1349	0.6	Extremo 1A	-0.00038	-15.122	-0.00607	0.081	0.0014	-0.0729
1349	0	Extremo 2A	-0.00038	-19.294	-0.00607	0.081	-0.0023	-10.3978
1349	0.3	Extremo 2A	-0.00038	-17.208	-0.00607	0.081	-0.00044	-4.9225
1349	0.6	Extremo 2A	-0.00038	-15.122	-0.00607	0.081	0.0014	-0.0729
1350	0	Extremo 1A	3.8E-05	15.392	-0.00044	0.7797	-5.4E-05	-0.0816
1350	0.3	Extremo 1A	3.8E-05	17.478	-0.00044	0.7797	8E-05	-5.0122
1350	0.6	Extremo 1A	3.8E-05	19.564	-0.00044	0.7797	0.00021	-10.5686
1350	0	Extremo 2A	3.8E-05	15.392	-0.00044	0.7797	-5.4E-05	-0.0816
1350	0.3	Extremo 2A	3.8E-05	17.478	-0.00044	0.7797	8E-05	-5.0122
1350	0.6	Extremo 2A	3.8E-05	19.564	-0.00044	0.7797	0.00021	-10.5686
1351	0	Extremo 1A	0.00037	36.075	-0.00103	1.4949	-0.00016	-11.1637
1351	0.5	Extremo 1A	0.00037	40.489	-0.00103	1.4949	0.00036	-30.3045
1351	1	Extremo 1A	0.00037	44.903	-0.00103	1.4949	0.00087	-51.6523
1351	0	Extremo 2A	0.00037	36.075	-0.00103	1.4949	-0.00016	-11.1637
1351	0.5	Extremo 2A	0.00037	40.489	-0.00103	1.4949	0.00036	-30.3045
1351	1	Extremo 2A	0.00037	44.903	-0.00103	1.4949	0.00087	-51.6523
1353	0	Extremo 1A	-0.00296	-44.495	-0.016	0.4068	-0.0085	-51.4795
1353	0.5	Extremo 1A	-0.00296	-40.08	-0.016	0.4068	-0.0003	-30.3357
1353	1	Extremo 1A	-0.00296	-35.666	-0.016	0.4068	0.0079	-11.399
1353	0	Extremo 2A	-0.00296	-44.495	-0.016	0.4068	-0.0085	-51.4795
1353	0.5	Extremo 2A	-0.00296	-40.08	-0.016	0.4068	-0.0003	-30.3357
1353	1	Extremo 2A	-0.00296	-35.666	-0.016	0.4068	0.0079	-11.399
1354	0	Extremo 1A	-0.00029	-19.567	-0.0046	-0.2771	-0.0017	-10.602
1354	0.3	Extremo 1A	-0.00029	-17.481	-0.0046	-0.2771	-0.00033	-5.0449
1354	0.6	Extremo 1A	-0.00029	-15.395	-0.0046	-0.2771	0.001	-0.1135
1354	0	Extremo 2A	-0.00029	-19.567	-0.0046	-0.2771	-0.0017	-10.602
1354	0.3	Extremo 2A	-0.00029	-17.481	-0.0046	-0.2771	-0.00033	-5.0449
1354	0.6	Extremo 2A	-0.00029	-15.395	-0.0046	-0.2771	0.001	-0.1135
1355	0	Extremo 1A	2.5E-05	15.563	-0.00026	1.0813	-2.3E-05	-0.0077
1355	0.3	Extremo 1A	2.5E-05	17.649	-0.00026	1.0813	5.6E-05	-4.9895
1355	0.6	Extremo 1A	2.5E-05	19.735	-0.00026	1.0813	0.00013	-10.5971
1355	0	Extremo 2A	2.5E-05	15.563	-0.00026	1.0813	-2.3E-05	-0.0077
1355	0.3	Extremo 2A	2.5E-05	17.649	-0.00026	1.0813	5.6E-05	-4.9895
1355	0.6	Extremo 2A	2.5E-05	19.735	-0.00026	1.0813	0.00013	-10.5971
1356	0	Extremo 1A	0.00024	37.942	-0.0005	2.7542	2E-05	-10.7852
1356	0.5	Extremo 1A	0.00024	42.356	-0.0005	2.7542	0.00027	-30.8597
1356	1	Extremo 1A	0.00024	46.77	-0.0005	2.7542	0.00052	-53.1411
1356	0	Extremo 2A	0.00024	37.942	-0.0005	2.7542	2E-05	-10.7852
1356	0.5	Extremo 2A	0.00024	42.356	-0.0005	2.7542	0.00027	-30.8597
1356	1	Extremo 2A	0.00024	46.77	-0.0005	2.7542	0.00052	-53.1411
1358	0	Extremo 1A	-0.00224	-47.064	-0.012	-1.3925	-0.0064	-53.9659
1358	0.5	Extremo 1A	-0.00224	-42.65	-0.012	-1.3925	-0.00022	-31.5374
1358	1	Extremo 1A	-0.00224	-38.236	-0.012	-1.3925	0.006	-11.3159
1358	0	Extremo 2A	-0.00224	-47.064	-0.012	-1.3925	-0.0064	-53.9659
1358	0.5	Extremo 2A	-0.00224	-42.65	-0.012	-1.3925	-0.00022	-31.5374
1358	1	Extremo 2A	-0.00224	-38.236	-0.012	-1.3925	0.006	-11.3159
1359	0	Extremo 1A	-0.00022	-19.908	-0.00349	-0.7639	-0.0013	-10.7526
1359	0.3	Extremo 1A	-0.00022	-17.822	-0.00349	-0.7639	-0.00025	-5.0931
1359	0.6	Extremo 1A	-0.00022	-15.736	-0.00349	-0.7639	0.0008	-0.0594
1359	0	Extremo 2A	-0.00022	-19.908	-0.00349	-0.7639	-0.0013	-10.7526
1359	0.3	Extremo 2A	-0.00022	-17.822	-0.00349	-0.7639	-0.00025	-5.0931
1359	0.6	Extremo 2A	-0.00022	-15.736	-0.00349	-0.7639	0.0008	-0.0594
1360	0	Extremo 1A	1.5E-05	15.516	-0.00014	0.9255	-3.1E-06	0.161
1360	0.3	Extremo 1A	1.5E-05	17.602	-0.00014	0.9255	3.9E-05	-4.8067
1360	0.6	Extremo 1A	1.5E-05	19.688	-0.00014	0.9255	8.1E-05	-10.4002
1360	0	Extremo 2A	1.5E-05	15.516	-0.00014	0.9255	-3.1E-06	0.161
1360	0.3	Extremo 2A	1.5E-05	17.602	-0.00014	0.9255	3.9E-05	-4.8067
1360	0.6	Extremo 2A	1.5E-05	19.688	-0.00014	0.9255	8.1E-05	-10.4002
1361	0	Extremo 1A	0.00014	40.19	-0.00016	3.1155	0.00012	-9.3156
1361	0.5	Extremo 1A	0.00014	44.604	-0.00016	3.1155	0.00021	-30.514
1361	1	Extremo 1A	0.00014	49.018	-0.00016	3.1155	0.00029	-53.9194
1361	0	Extremo 2A	0.00014	40.19	-0.00016	3.1155	0.00012	-9.3156
1361	0.5	Extremo 2A	0.00014	44.604	-0.00016	3.1155	0.00021	-30.514
1361	1	Extremo 2A	0.00014	49.018	-0.00016	3.1155	0.00029	-53.9194
1363	0	Extremo 1A	-0.00169	-50.723	-0.00942	-2.7167	-0.0049	-56.0514
1363	0.5	Extremo 1A	-0.00169	-46.309	-0.00942	-2.7167	-0.00016	-31.7934
1363	1	Extremo 1A	-0.00169	-41.895	-0.00942	-2.7167	0.0046	-9.7423
1363	0	Extremo 2A	-0.00169	-50.723	-0.00942	-2.7167	-0.0049	-56.0514
1363	0.5	Extremo 2A	-0.00169	-46.309	-0.00942	-2.7167	-0.00016	-31.7934
1363	1	Extremo 2A	-0.00169	-41.895	-0.00942	-2.7167	0.0046	-9.7423
1364	0	Extremo 1A	-0.00017	-20.021	-0.00265	-0.8356	-0.00098	-10.6264
1364	0.3	Extremo 1A	-0.00017	-17.935	-0.00265	-0.8356	-0.00019	-4.9331
1364	0.6	Extremo 1A	-0.00017	-15.849	-0.00265	-0.8356	0.00061	0.1344
1364	0	Extremo 2A	-0.00017	-20.021	-0.00265	-0.8356	-0.00098	-10.6264
1364	0.3	Extremo 2A	-0.00017	-17.935	-0.00265	-0.8356	-0.00019	-4.9331
1364	0.6	Extremo 2A	-0.00017	-15.849	-0.00265	-0.8356	0.00061	0.1344
1365	0	Extremo 1A	9E-06	15.284	-6E-05	0.0049	8.7E-06	0.2217
1365	0.3	Extremo 1A	9E-06	17.37	-6E-05	0.0049	2.7E-05	-4.6762
1365	0.6	Extremo 1A	9E-06	19.455	-6E-05	0.0049	4.5E-05	-10.2
1365	0	Extremo 2A	9E-06	15.284	-6E-05	0.0049	8.7E-06	0.2217
1365	0.3	Extremo 2A	9E-06	17.37	-6E-05	0.0049	2.7E-05	-4.6762
1365	0.6	Extremo 2A	9E-06	19.455	-6E-05	0.0049	4.5E-05	-10.2
1366	0	Extremo 1A	8.2E-05	39.076	4.7E-05	0.0024	0.00018	-8.5426
1366	0.5	Extremo 1A	8.2E-05	43.49	4.7E-05	0.0024	0.00016	-29.1839
1366	1	Extremo 1A	8.2E-05	47.904	4.7E-05	0.0024	0.00013	-52.0323
1366	0	Extremo 2A	8.2E-05	39.076	4.7E-05	0.0024	0.00018	-8.5426

1366	0.5	Extremo 2A	8.2E-05	43.49	4.7E-05	0.0024	0.00016	-29.1839
1366	1	Extremo 2A	8.2E-05	47.904	4.7E-05	0.0024	0.00013	-52.0323
1368	0	Extremo 1A	-0.00129	-50.121	-0.00717	0.0421	-0.0037	-54.497
1368	0.5	Extremo 1A	-0.00129	-45.707	-0.00717	0.0421	-0.00011	-30.5402
1368	1	Extremo 1A	-0.00129	-41.293	-0.00717	0.0421	0.0035	-8.7904
1368	0	Extremo 2A	-0.00129	-50.121	-0.00717	0.0421	-0.0037	-54.497
1368	0.5	Extremo 2A	-0.00129	-45.707	-0.00717	0.0421	-0.00011	-30.5402
1368	1	Extremo 2A	-0.00129	-41.293	-0.00717	0.0421	0.0035	-8.7904
1369	0	Extremo 1A	-0.00013	-19.822	-0.00201	0.0103	-0.00074	-10.4258
1369	0.3	Extremo 1A	-0.00013	-17.736	-0.00201	0.0103	-0.00014	-4.7922
1369	0.6	Extremo 1A	-0.00013	-15.65	-0.00201	0.0103	0.00046	0.2155
1369	0	Extremo 2A	-0.00013	-19.822	-0.00201	0.0103	-0.00074	-10.4258
1369	0.3	Extremo 2A	-0.00013	-17.736	-0.00201	0.0103	-0.00014	-4.7922
1369	0.6	Extremo 2A	-0.00013	-15.65	-0.00201	0.0103	0.00046	0.2155
1370	0	Extremo 1A	4.7E-06	15.516	-9.3E-06	-0.9157	1.5E-05	0.161
1370	0.3	Extremo 1A	4.7E-06	17.602	-9.3E-06	-0.9157	1.8E-05	-4.8067
1370	0.6	Extremo 1A	4.7E-06	19.688	-9.3E-06	-0.9157	2.1E-05	-10.4001
1370	0	Extremo 2A	4.7E-06	15.516	-9.3E-06	-0.9157	1.5E-05	0.161
1370	0.3	Extremo 2A	4.7E-06	17.602	-9.3E-06	-0.9157	1.8E-05	-4.8067
1370	0.6	Extremo 2A	4.7E-06	19.688	-9.3E-06	-0.9157	2.1E-05	-10.4001
1371	0	Extremo 1A	4E-05	40.19	0.00017	-3.1108	0.0002	-9.3153
1371	0.5	Extremo 1A	4E-05	44.604	0.00017	-3.1108	0.00012	-30.5136
1371	1	Extremo 1A	4E-05	49.018	0.00017	-3.1108	3.4E-05	-53.9189
1371	0	Extremo 2A	4E-05	40.19	0.00017	-3.1108	0.0002	-9.3153
1371	0.5	Extremo 2A	4E-05	44.604	0.00017	-3.1108	0.00012	-30.5136
1371	1	Extremo 2A	4E-05	49.018	0.00017	-3.1108	3.4E-05	-53.9189
1373	0	Extremo 1A	-0.00098	-50.723	-0.00546	2.8009	-0.0028	-56.0513
1373	0.5	Extremo 1A	-0.00098	-46.309	-0.00546	2.8009	-8E-05	-31.7933
1373	1	Extremo 1A	-0.00098	-41.895	-0.00546	2.8009	0.0027	-9.7423
1373	0	Extremo 2A	-0.00098	-50.723	-0.00546	2.8009	-0.0028	-56.0513
1373	0.5	Extremo 2A	-0.00098	-46.309	-0.00546	2.8009	-8E-05	-31.7933
1373	1	Extremo 2A	-0.00098	-41.895	-0.00546	2.8009	0.0027	-9.7423
1374	0	Extremo 1A	-9.5E-05	-20.02	-0.00153	0.8561	-0.00057	-10.6264
1374	0.3	Extremo 1A	-9.5E-05	-17.935	-0.00153	0.8561	-0.00011	-4.9331
1374	0.6	Extremo 1A	-9.5E-05	-15.849	-0.00153	0.8561	0.00035	0.1344
1374	0	Extremo 2A	-9.5E-05	-20.02	-0.00153	0.8561	-0.00057	-10.6264
1374	0.3	Extremo 2A	-9.5E-05	-17.935	-0.00153	0.8561	-0.00011	-4.9331
1374	0.6	Extremo 2A	-9.5E-05	-15.849	-0.00153	0.8561	0.00035	0.1344
1375	0	Extremo 1A	1.9E-06	15.563	2.1E-05	-1.0718	1.8E-05	-0.0076
1375	0.3	Extremo 1A	1.9E-06	17.649	2.1E-05	-1.0718	1.2E-05	-4.9894
1375	0.6	Extremo 1A	1.9E-06	19.735	2.1E-05	-1.0718	5.5E-06	-10.5969
1375	0	Extremo 2A	1.9E-06	15.563	2.1E-05	-1.0718	1.8E-05	-0.0076
1375	0.3	Extremo 2A	1.9E-06	17.649	2.1E-05	-1.0718	1.2E-05	-4.9894
1375	0.6	Extremo 2A	1.9E-06	19.735	2.1E-05	-1.0718	5.5E-06	-10.5969
1376	0	Extremo 1A	1.3E-05	37.941	0.00023	-2.75	0.00021	-10.7845
1376	0.5	Extremo 1A	1.3E-05	42.355	0.00023	-2.75	9E-05	-30.8587
1376	1	Extremo 1A	1.3E-05	46.77	0.00023	-2.75	-2.7E-05	-53.14
1376	0	Extremo 2A	1.3E-05	37.941	0.00023	-2.75	0.00021	-10.7845
1376	0.5	Extremo 2A	1.3E-05	42.355	0.00023	-2.75	9E-05	-30.8587
1376	1	Extremo 2A	1.3E-05	46.77	0.00023	-2.75	-2.7E-05	-53.14
1378	0	Extremo 1A	-0.00074	-47.064	-0.00417	1.4768	-0.0021	-53.9658
1378	0.5	Extremo 1A	-0.00074	-42.65	-0.00417	1.4768	-5.7E-05	-31.5373
1378	1	Extremo 1A	-0.00074	-38.236	-0.00417	1.4768	0.002	-11.3159
1378	0	Extremo 2A	-0.00074	-47.064	-0.00417	1.4768	-0.0021	-53.9658
1378	0.5	Extremo 2A	-0.00074	-42.65	-0.00417	1.4768	-5.7E-05	-31.5373
1378	1	Extremo 2A	-0.00074	-38.236	-0.00417	1.4768	0.002	-11.3159
1379	0	Extremo 1A	-7.2E-05	-19.908	-0.00117	0.7844	-0.00043	-10.7526
1379	0.3	Extremo 1A	-7.2E-05	-17.822	-0.00117	0.7844	-8.1E-05	-5.0931
1379	0.6	Extremo 1A	-7.2E-05	-15.736	-0.00117	0.7844	0.00027	-0.0594
1379	0	Extremo 2A	-7.2E-05	-19.908	-0.00117	0.7844	-0.00043	-10.7526
1379	0.3	Extremo 2A	-7.2E-05	-17.822	-0.00117	0.7844	-8.1E-05	-5.0931
1379	0.6	Extremo 2A	-7.2E-05	-15.736	-0.00117	0.7844	0.00027	-0.0594
1380	0	Extremo 1A	1.2E-07	15.392	3.9E-05	-0.7705	1.9E-05	-0.0815
1380	0.3	Extremo 1A	1.2E-07	17.478	3.9E-05	-0.7705	7.7E-06	-5.012
1380	0.6	Extremo 1A	1.2E-07	19.564	3.9E-05	-0.7705	-3.9E-06	-10.5682
1380	0	Extremo 2A	1.2E-07	15.392	3.9E-05	-0.7705	1.9E-05	-0.0815
1380	0.3	Extremo 2A	1.2E-07	17.478	3.9E-05	-0.7705	7.7E-06	-5.012
1380	0.6	Extremo 2A	1.2E-07	19.564	3.9E-05	-0.7705	-3.9E-06	-10.5682
1381	0	Extremo 1A	-3.8E-06	36.074	0.00026	-1.4917	0.0002	-11.1625
1381	0.5	Extremo 1A	-3.8E-06	40.488	0.00026	-1.4917	6.8E-05	-30.3029
1381	1	Extremo 1A	-3.8E-06	44.902	0.00026	-1.4917	-6.2E-05	-51.6503
1381	0	Extremo 2A	-3.8E-06	36.074	0.00026	-1.4917	0.0002	-11.1625

1381	0.5	Extremo 2A	-3.8E-06	40.488	0.00026	-1.4917	6.8E-05	-30.3029
1381	1	Extremo 2A	-3.8E-06	44.902	0.00026	-1.4917	-6.2E-05	-51.6503
1383	0	Extremo 1A	-0.00057	-44.494	-0.00319	-0.3225	-0.0016	-51.4794
1383	0.5	Extremo 1A	-0.00057	-40.08	-0.00319	-0.3225	-4.1E-05	-30.3357
1383	1	Extremo 1A	-0.00057	-35.666	-0.00319	-0.3225	0.0016	-11.3991
1383	0	Extremo 2A	-0.00057	-44.494	-0.00319	-0.3225	-0.0016	-51.4794
1383	0.5	Extremo 2A	-0.00057	-40.08	-0.00319	-0.3225	-4.1E-05	-30.3357
1383	1	Extremo 2A	-0.00057	-35.666	-0.00319	-0.3225	0.0016	-11.3991
1384	0	Extremo 1A	-5.5E-05	-19.567	-0.00089	0.2976	-0.00033	-10.602
1384	0.3	Extremo 1A	-5.5E-05	-17.481	-0.00089	0.2976	-6.1E-05	-5.0449
1384	0.6	Extremo 1A	-5.5E-05	-15.395	-0.00089	0.2976	0.00021	-0.1135
1384	0	Extremo 2A	-5.5E-05	-19.567	-0.00089	0.2976	-0.00033	-10.602
1384	0.3	Extremo 2A	-5.5E-05	-17.481	-0.00089	0.2976	-6.1E-05	-5.0449
1384	0.6	Extremo 2A	-5.5E-05	-15.395	-0.00089	0.2976	0.00021	-0.1135
1385	0	Extremo 1A	-9.4E-07	15.228	4.7E-05	-0.4503	1.9E-05	-0.0743
1385	0.3	Extremo 1A	-9.4E-07	17.314	4.7E-05	-0.4503	4.8E-06	-4.9557
1385	0.6	Extremo 1A	-9.4E-07	19.4	4.7E-05	-0.4503	-9.3E-06	-10.4629
1385	0	Extremo 2A	-9.4E-07	15.228	4.7E-05	-0.4503	1.9E-05	-0.0743
1385	0.3	Extremo 2A	-9.4E-07	17.314	4.7E-05	-0.4503	4.8E-06	-4.9557
1385	0.6	Extremo 2A	-9.4E-07	19.4	4.7E-05	-0.4503	-9.3E-06	-10.4629
1386	0	Extremo 1A	-1.4E-05	35.336	0.00026	-0.6648	0.00018	-10.9396
1386	0.5	Extremo 1A	-1.4E-05	39.75	0.00026	-0.6648	5.2E-05	-29.711
1386	1	Extremo 1A	-1.4E-05	44.164	0.00026	-0.6648	-7.9E-05	-50.6895
1386	0	Extremo 2A	-1.4E-05	35.336	0.00026	-0.6648	0.00018	-10.9396
1386	0.5	Extremo 2A	-1.4E-05	39.75	0.00026	-0.6648	5.2E-05	-29.711
1386	1	Extremo 2A	-1.4E-05	44.164	0.00026	-0.6648	-7.9E-05	-50.6895
1388	0	Extremo 1A	-0.00043	-43.561	-0.00244	-1.1272	-0.0012	-49.9916
1388	0.5	Extremo 1A	-0.00043	-39.147	-0.00244	-1.1272	-2.9E-05	-29.3148
1388	1	Extremo 1A	-0.00043	-34.733	-0.00244	-1.1272	0.0012	-10.8449
1388	0	Extremo 2A	-0.00043	-43.561	-0.00244	-1.1272	-0.0012	-49.9916
1388	0.5	Extremo 2A	-0.00043	-39.147	-0.00244	-1.1272	-2.9E-05	-29.3148
1388	1	Extremo 2A	-0.00043	-34.733	-0.00244	-1.1272	0.0012	-10.8449
1389	0	Extremo 1A	-4.2E-05	-19.294	-0.00068	-0.0606	-0.00025	-10.3979
1389	0.3	Extremo 1A	-4.2E-05	-17.208	-0.00068	-0.0606	-4.7E-05	-4.9226
1389	0.6	Extremo 1A	-4.2E-05	-15.122	-0.00068	-0.0606	0.00016	-0.073
1389	0	Extremo 2A	-4.2E-05	-19.294	-0.00068	-0.0606	-0.00025	-10.3979
1389	0.3	Extremo 2A	-4.2E-05	-17.208	-0.00068	-0.0606	-4.7E-05	-4.9226
1389	0.6	Extremo 2A	-4.2E-05	-15.122	-0.00068	-0.0606	0.00016	-0.073
1390	0	Extremo 1A	-1.5E-06	15.137	4.9E-05	-0.2417	1.7E-05	-0.0492
1390	0.3	Extremo 1A	-1.5E-06	17.223	4.9E-05	-0.2417	2.8E-06	-4.9031
1390	0.6	Extremo 1A	-1.5E-06	19.308	4.9E-05	-0.2417	-1.2E-05	-10.3827
1390	0	Extremo 2A	-1.5E-06	15.137	4.9E-05	-0.2417	1.7E-05	-0.0492
1390	0.3	Extremo 2A	-1.5E-06	17.223	4.9E-05	-0.2417	2.8E-06	-4.9031
1390	0.6	Extremo 2A	-1.5E-06	19.308	4.9E-05	-0.2417	-1.2E-05	-10.3827
1391	0	Extremo 1A	-1.9E-05	35.161	0.00025	-0.2876	0.00016	-10.68
1391	0.5	Extremo 1A	-1.9E-05	39.575	0.00025	-0.2876	3.9E-05	-29.3641
1391	1	Extremo 1A	-1.9E-05	43.989	0.00025	-0.2876	-8.5E-05	-50.2552
1391	0	Extremo 2A	-1.9E-05	35.161	0.00025	-0.2876	0.00016	-10.68
1391	0.5	Extremo 2A	-1.9E-05	39.575	0.00025	-0.2876	3.9E-05	-29.3641
1391	1	Extremo 2A	-1.9E-05	43.989	0.00025	-0.2876	-8.5E-05	-50.2552
1393	0	Extremo 1A	-0.00033	-43.332	-0.00187	-1.1457	-0.00095	-49.292
1393	0.5	Extremo 1A	-0.00033	-38.918	-0.00187	-1.1457	-2.1E-05	-28.7294
1393	1	Extremo 1A	-0.00033	-34.504	-0.00187	-1.1457	0.00091	-10.3738
1393	0	Extremo 2A	-0.00033	-43.332	-0.00187	-1.1457	-0.00095	-49.292
1393	0.5	Extremo 2A	-0.00033	-38.918	-0.00187	-1.1457	-2.1E-05	-28.7294
1393	1	Extremo 2A	-0.00033	-34.504	-0.00187	-1.1457	0.00091	-10.3738
1394	0	Extremo 1A	-3.2E-05	-19.144	-0.00052	-0.1875	-0.00019	-10.2583
1394	0.3	Extremo 1A	-3.2E-05	-17.058	-0.00052	-0.1875	-3.5E-05	-4.8282
1394	0.6	Extremo 1A	-3.2E-05	-14.972	-0.00052	-0.1875	0.00012	-0.0237
1394	0	Extremo 2A	-3.2E-05	-19.144	-0.00052	-0.1875	-0.00019	-10.2583
1394	0.3	Extremo 2A	-3.2E-05	-17.058	-0.00052	-0.1875	-3.5E-05	-4.8282
1394	0.6	Extremo 2A	-3.2E-05	-14.972	-0.00052	-0.1875	0.00012	-0.0237
1395	0	Extremo 1A	-1.8E-06	15.097	4.8E-05	-0.1185	1.6E-05	-0.0322
1395	0.3	Extremo 1A	-1.8E-06	17.183	4.8E-05	-0.1185	1.4E-06	-4.8743
1395	0.6	Extremo 1A	-1.8E-06	19.269	4.8E-05	-0.1185	-1.3E-05	-10.3422
1395	0	Extremo 2A	-1.8E-06	15.097	4.8E-05	-0.1185	1.6E-05	-0.0322
1395	0.3	Extremo 2A	-1.8E-06	17.183	4.8E-05	-0.1185	1.4E-06	-4.8743
1395	0.6	Extremo 2A	-1.8E-06	19.269	4.8E-05	-0.1185	-1.3E-05	-10.3422
1396	0	Extremo 1A	-2.1E-05	35.151	0.00023	-0.1239	0.00014	-10.5347
1396	0.5	Extremo 1A	-2.1E-05	39.565	0.00023	-0.1239	2.9E-05	-29.2139
1396	1	Extremo 1A	-2.1E-05	43.979	0.00023	-0.1239	-8.4E-05	-50.1
1396	0	Extremo 2A	-2.1E-05	35.151	0.00023	-0.1239	0.00014	-10.5347

1396	0.5	Extremo 2A	-2.1E-05	39.565	0.00023	-0.1239	2.9E-05	-29.2139
1396	1	Extremo 2A	-2.1E-05	43.979	0.00023	-0.1239	-8.4E-05	-50.1
1398	0	Extremo 1A	-0.00025	-43.293	-0.00143	-0.7874	-0.00073	-48.9995
1398	0.5	Extremo 1A	-0.00025	-38.879	-0.00143	-0.7874	-1.5E-05	-28.4563
1398	1	Extremo 1A	-0.00025	-34.465	-0.00143	-0.7874	0.0007	-10.1202
1398	0	Extremo 2A	-0.00025	-43.293	-0.00143	-0.7874	-0.00073	-48.9995
1398	0.5	Extremo 2A	-0.00025	-38.879	-0.00143	-0.7874	-1.5E-05	-28.4563
1398	1	Extremo 2A	-0.00025	-34.465	-0.00143	-0.7874	0.0007	-10.1202
1399	0	Extremo 1A	-2.5E-05	-19.075	-0.0004	-0.1612	-0.00015	-10.1869
1399	0.3	Extremo 1A	-2.5E-05	-16.989	-0.0004	-0.1612	-2.7E-05	-4.7774
1399	0.6	Extremo 1A	-2.5E-05	-14.903	-0.0004	-0.1612	9.2E-05	0.0062
1399	0	Extremo 2A	-2.5E-05	-19.075	-0.0004	-0.1612	-0.00015	-10.1869
1399	0.3	Extremo 2A	-2.5E-05	-16.989	-0.0004	-0.1612	-2.7E-05	-4.7774
1399	0.6	Extremo 2A	-2.5E-05	-14.903	-0.0004	-0.1612	9.2E-05	0.0062
1400	0	Extremo 1A	-1.8E-06	15.085	4.4E-05	-0.0352	1.4E-05	-0.025
1400	0.3	Extremo 1A	-1.8E-06	17.171	4.4E-05	-0.0352	5.6E-07	-4.8633
1400	0.6	Extremo 1A	-1.8E-06	19.257	4.4E-05	-0.0352	-1.3E-05	-10.3274
1400	0	Extremo 2A	-1.8E-06	15.085	4.4E-05	-0.0352	1.4E-05	-0.025
1400	0.3	Extremo 2A	-1.8E-06	17.171	4.4E-05	-0.0352	5.6E-07	-4.8633
1400	0.6	Extremo 2A	-1.8E-06	19.257	4.4E-05	-0.0352	-1.3E-05	-10.3274
1401	0	Extremo 1A	-2.1E-05	35.164	0.0002	-0.0281	0.00012	-10.4796
1401	0.5	Extremo 1A	-2.1E-05	39.578	0.0002	-0.0281	2.2E-05	-29.165
1401	1	Extremo 1A	-2.1E-05	43.992	0.0002	-0.0281	-7.9E-05	-50.0575
1401	0	Extremo 2A	-2.1E-05	35.164	0.0002	-0.0281	0.00012	-10.4796
1401	0.5	Extremo 2A	-2.1E-05	39.578	0.0002	-0.0281	2.2E-05	-29.165
1401	1	Extremo 2A	-2.1E-05	43.992	0.0002	-0.0281	-7.9E-05	-50.0575
1403	0	Extremo 1A	-0.00019	-43.29	-0.0011	-0.2875	-0.00056	-48.8962
1403	0.5	Extremo 1A	-0.00019	-38.876	-0.0011	-0.2875	-1E-05	-28.3549
1403	1	Extremo 1A	-0.00019	-34.461	-0.0011	-0.2875	0.00054	-10.0206
1403	0	Extremo 2A	-0.00019	-43.29	-0.0011	-0.2875	-0.00056	-48.8962
1403	0.5	Extremo 2A	-0.00019	-38.876	-0.0011	-0.2875	-1E-05	-28.3549
1403	1	Extremo 2A	-0.00019	-34.461	-0.0011	-0.2875	0.00054	-10.0206
1404	0	Extremo 1A	-1.9E-05	-19.049	-0.0003	-0.0631	-0.00011	-10.159
1404	0.3	Extremo 1A	-1.9E-05	-16.963	-0.0003	-0.0631	-2E-05	-4.7572
1404	0.6	Extremo 1A	-1.9E-05	-14.877	-0.0003	-0.0631	7.1E-05	0.0188
1404	0	Extremo 2A	-1.9E-05	-19.049	-0.0003	-0.0631	-0.00011	-10.159
1404	0.3	Extremo 2A	-1.9E-05	-16.963	-0.0003	-0.0631	-2E-05	-4.7572
1404	0.6	Extremo 2A	-1.9E-05	-14.877	-0.0003	-0.0631	7.1E-05	0.0188
1405	0	Extremo 1A	-1.8E-06	15.085	4E-05	0.0373	1.2E-05	-0.0249
1405	0.3	Extremo 1A	-1.8E-06	17.17	4E-05	0.0373	2.5E-08	-4.8631
1405	0.6	Extremo 1A	-1.8E-06	19.256	4E-05	0.0373	-1.2E-05	-10.3272
1405	0	Extremo 2A	-1.8E-06	15.085	4E-05	0.0373	1.2E-05	-0.0249
1405	0.3	Extremo 2A	-1.8E-06	17.17	4E-05	0.0373	2.5E-08	-4.8631
1405	0.6	Extremo 2A	-1.8E-06	19.256	4E-05	0.0373	-1.2E-05	-10.3272
1406	0	Extremo 1A	-2E-05	35.164	0.00018	0.0549	0.00011	-10.4787
1406	0.5	Extremo 1A	-2E-05	39.578	0.00018	0.0549	1.7E-05	-29.1643
1406	1	Extremo 1A	-2E-05	43.992	0.00018	0.0549	-7.2E-05	-50.057
1406	0	Extremo 2A	-2E-05	35.164	0.00018	0.0549	0.00011	-10.4787
1406	0.5	Extremo 2A	-2E-05	39.578	0.00018	0.0549	1.7E-05	-29.1643
1406	1	Extremo 2A	-2E-05	43.992	0.00018	0.0549	-7.2E-05	-50.057
1408	0	Extremo 1A	-0.00015	-43.29	-0.00084	0.2467	-0.00043	-48.8957
1408	0.5	Extremo 1A	-0.00015	-38.876	-0.00084	0.2467	-7.2E-06	-28.3542
1408	1	Extremo 1A	-0.00015	-34.462	-0.00084	0.2467	0.00041	-10.0198
1408	0	Extremo 2A	-0.00015	-43.29	-0.00084	0.2467	-0.00043	-48.8957
1408	0.5	Extremo 2A	-0.00015	-38.876	-0.00084	0.2467	-7.2E-06	-28.3542
1408	1	Extremo 2A	-0.00015	-34.462	-0.00084	0.2467	0.00041	-10.0198
1409	0	Extremo 1A	-1.4E-05	-19.049	-0.00023	0.055	-8.6E-05	-10.1588
1409	0.3	Extremo 1A	-1.4E-05	-16.963	-0.00023	0.055	-1.6E-05	-4.7571
1409	0.6	Extremo 1A	-1.4E-05	-14.877	-0.00023	0.055	5.4E-05	0.0189
1409	0	Extremo 2A	-1.4E-05	-19.049	-0.00023	0.055	-8.6E-05	-10.1588
1409	0.3	Extremo 2A	-1.4E-05	-16.963	-0.00023	0.055	-1.6E-05	-4.7571
1409	0.6	Extremo 2A	-1.4E-05	-14.877	-0.00023	0.055	5.4E-05	0.0189
1410	0	Extremo 1A	-1.7E-06	15.097	3.5E-05	0.1197	1E-05	-0.0317
1410	0.3	Extremo 1A	-1.7E-06	17.183	3.5E-05	0.1197	-2.9E-07	-4.8736
1410	0.6	Extremo 1A	-1.7E-06	19.268	3.5E-05	0.1197	-1.1E-05	-10.3412
1410	0	Extremo 2A	-1.7E-06	15.097	3.5E-05	0.1197	1E-05	-0.0317
1410	0.3	Extremo 2A	-1.7E-06	17.183	3.5E-05	0.1197	-2.9E-07	-4.8736
1410	0.6	Extremo 2A	-1.7E-06	19.268	3.5E-05	0.1197	-1.1E-05	-10.3412
1411	0	Extremo 1A	-1.8E-05	35.152	0.00015	0.1499	8.9E-05	-10.531
1411	0.5	Extremo 1A	-1.8E-05	39.566	0.00015	0.1499	1.3E-05	-29.2106
1411	1	Extremo 1A	-1.8E-05	43.98	0.00015	0.1499	-6.4E-05	-50.0972
1411	0	Extremo 2A	-1.8E-05	35.152	0.00015	0.1499	8.9E-05	-10.531

1411	0.5	Extremo 2A	-1.8E-05	39.566	0.00015	0.1499	1.3E-05	-29.2106
1411	1	Extremo 2A	-1.8E-05	43.98	0.00015	0.1499	-6.4E-05	-50.0972
1413	0	Extremo 1A	-0.00011	-43.295	-0.00065	0.7473	-0.00033	-48.9968
1413	0.5	Extremo 1A	-0.00011	-38.88	-0.00065	0.7473	-5.1E-06	-28.4531
1413	1	Extremo 1A	-0.00011	-34.466	-0.00065	0.7473	0.00032	-10.1164
1413	0	Extremo 2A	-0.00011	-43.295	-0.00065	0.7473	-0.00033	-48.9968
1413	0.5	Extremo 2A	-0.00011	-38.88	-0.00065	0.7473	-5.1E-06	-28.4531
1413	1	Extremo 2A	-0.00011	-34.466	-0.00065	0.7473	0.00032	-10.1164
1414	0	Extremo 1A	-1.1E-05	-19.074	-0.00018	0.154	-6.6E-05	-10.1859
1414	0.3	Extremo 1A	-1.1E-05	-16.988	-0.00018	0.154	-1.2E-05	-4.7767
1414	0.6	Extremo 1A	-1.1E-05	-14.902	-0.00018	0.154	4.2E-05	0.0068
1414	0	Extremo 2A	-1.1E-05	-19.074	-0.00018	0.154	-6.6E-05	-10.1859
1414	0.3	Extremo 2A	-1.1E-05	-16.988	-0.00018	0.154	-1.2E-05	-4.7767
1414	0.6	Extremo 2A	-1.1E-05	-14.902	-0.00018	0.154	4.2E-05	0.0068
1415	0	Extremo 1A	-1.5E-06	15.134	3.1E-05	0.2403	8.8E-06	-0.048
1415	0.3	Extremo 1A	-1.5E-06	17.22	3.1E-05	0.2403	-4.7E-07	-4.9011
1415	0.6	Extremo 1A	-1.5E-06	19.306	3.1E-05	0.2403	-9.7E-06	-10.38
1415	0	Extremo 2A	-1.5E-06	15.134	3.1E-05	0.2403	8.8E-06	-0.048
1415	0.3	Extremo 2A	-1.5E-06	17.22	3.1E-05	0.2403	-4.7E-07	-4.9011
1415	0.6	Extremo 2A	-1.5E-06	19.306	3.1E-05	0.2403	-9.7E-06	-10.38
1416	0	Extremo 1A	-1.6E-05	35.161	0.00013	0.3098	7.5E-05	-10.6701
1416	0.5	Extremo 1A	-1.6E-05	39.575	0.00013	0.3098	9.6E-06	-29.3541
1416	1	Extremo 1A	-1.6E-05	43.989	0.00013	0.3098	-5.5E-05	-50.2452
1416	0	Extremo 2A	-1.6E-05	35.161	0.00013	0.3098	7.5E-05	-10.6701
1416	0.5	Extremo 2A	-1.6E-05	39.575	0.00013	0.3098	9.6E-06	-29.3541
1416	1	Extremo 2A	-1.6E-05	43.989	0.00013	0.3098	-5.5E-05	-50.2452
1418	0	Extremo 1A	-8.7E-05	-43.333	-0.0005	1.1093	-0.00025	-49.2826
1418	0.5	Extremo 1A	-8.7E-05	-38.919	-0.0005	1.1093	-3.5E-06	-28.7194
1418	1	Extremo 1A	-8.7E-05	-34.505	-0.0005	1.1093	0.00025	-10.3633
1418	0	Extremo 2A	-8.7E-05	-43.333	-0.0005	1.1093	-0.00025	-49.2826
1418	0.5	Extremo 2A	-8.7E-05	-38.919	-0.0005	1.1093	-3.5E-06	-28.7194
1418	1	Extremo 2A	-8.7E-05	-34.505	-0.0005	1.1093	0.00025	-10.3633
1419	0	Extremo 1A	-8.4E-06	-19.141	-0.00014	0.1831	-5E-05	-10.2555
1419	0.3	Extremo 1A	-8.4E-06	-17.055	-0.00014	0.1831	-9.1E-06	-4.826
1419	0.6	Extremo 1A	-8.4E-06	-14.969	-0.00014	0.1831	3.2E-05	-0.0224
1419	0	Extremo 2A	-8.4E-06	-19.141	-0.00014	0.1831	-5E-05	-10.2555
1419	0.3	Extremo 2A	-8.4E-06	-17.055	-0.00014	0.1831	-9.1E-06	-4.826
1419	0.6	Extremo 2A	-8.4E-06	-14.969	-0.00014	0.1831	3.2E-05	-0.0224
1420	0	Extremo 1A	-1.3E-06	15.222	2.6E-05	0.4427	7.4E-06	-0.0721
1420	0.3	Extremo 1A	-1.3E-06	17.308	2.6E-05	0.4427	-5.4E-07	-4.9516
1420	0.6	Extremo 1A	-1.3E-06	19.394	2.6E-05	0.4427	-8.4E-06	-10.4569
1420	0	Extremo 2A	-1.3E-06	15.222	2.6E-05	0.4427	7.4E-06	-0.0721
1420	0.3	Extremo 2A	-1.3E-06	17.308	2.6E-05	0.4427	-5.4E-07	-4.9516
1420	0.6	Extremo 2A	-1.3E-06	19.394	2.6E-05	0.4427	-8.4E-06	-10.4569
1421	0	Extremo 1A	-1.4E-05	35.328	0.00011	0.6741	6.2E-05	-10.9192
1421	0.5	Extremo 1A	-1.4E-05	39.742	0.00011	0.6741	7.3E-06	-29.6868
1421	1	Extremo 1A	-1.4E-05	44.156	0.00011	0.6741	-4.8E-05	-50.6614
1421	0	Extremo 2A	-1.4E-05	35.328	0.00011	0.6741	6.2E-05	-10.9192
1421	0.5	Extremo 2A	-1.4E-05	39.742	0.00011	0.6741	7.3E-06	-29.6868
1421	1	Extremo 2A	-1.4E-05	44.156	0.00011	0.6741	-4.8E-05	-50.6614
1423	0	Extremo 1A	-6.6E-05	-43.556	-0.00038	1.104	-0.00019	-49.964
1423	0.5	Extremo 1A	-6.6E-05	-39.142	-0.00038	1.104	-2.4E-06	-29.2893
1423	1	Extremo 1A	-6.6E-05	-34.728	-0.00038	1.104	0.00019	-10.8216
1423	0	Extremo 2A	-6.6E-05	-43.556	-0.00038	1.104	-0.00019	-49.964
1423	0.5	Extremo 2A	-6.6E-05	-39.142	-0.00038	1.104	-2.4E-06	-29.2893
1423	1	Extremo 2A	-6.6E-05	-34.728	-0.00038	1.104	0.00019	-10.8216
1424	0	Extremo 1A	-6.5E-06	-19.288	-0.00011	0.063	-3.9E-05	-10.3912
1424	0.3	Extremo 1A	-6.5E-06	-17.202	-0.00011	0.063	-6.9E-06	-4.9179
1424	0.6	Extremo 1A	-6.5E-06	-15.116	-0.00011	0.063	2.5E-05	-0.0703
1424	0	Extremo 2A	-6.5E-06	-19.288	-0.00011	0.063	-3.9E-05	-10.3912
1424	0.3	Extremo 2A	-6.5E-06	-17.202	-0.00011	0.063	-6.9E-06	-4.9179
1424	0.6	Extremo 2A	-6.5E-06	-15.116	-0.00011	0.063	2.5E-05	-0.0703
1425	0	Extremo 1A	-1.1E-06	15.379	2.2E-05	0.7521	6.1E-06	-0.0788
1425	0.3	Extremo 1A	-1.1E-06	17.465	2.2E-05	0.7521	-5.6E-07	-5.0055
1425	0.6	Extremo 1A	-1.1E-06	19.551	2.2E-05	0.7521	-7.3E-06	-10.5579
1425	0	Extremo 2A	-1.1E-06	15.379	2.2E-05	0.7521	6.1E-06	-0.0788
1425	0.3	Extremo 2A	-1.1E-06	17.465	2.2E-05	0.7521	-5.6E-07	-5.0055
1425	0.6	Extremo 2A	-1.1E-06	19.551	2.2E-05	0.7521	-7.3E-06	-10.5579
1426	0	Extremo 1A	-1.2E-05	36.038	9.2E-05	1.47	5.1E-05	-11.1326
1426	0.5	Extremo 1A	-1.2E-05	40.452	9.2E-05	1.47	5.5E-06	-30.2552
1426	1	Extremo 1A	-1.2E-05	44.866	9.2E-05	1.47	-4E-05	-51.5848
1426	0	Extremo 2A	-1.2E-05	36.038	9.2E-05	1.47	5.1E-05	-11.1326

1426	0.5	Extremo 2A	-1.2E-05	40.452	9.2E-05	1.47	5.5E-06	-30.2552
1426	1	Extremo 2A	-1.2E-05	44.866	9.2E-05	1.47	-4E-05	-51.5848
1428	0	Extremo 1A	-5.1E-05	-44.464	-0.0003	0.3339	-0.00015	-51.41
1428	0.5	Extremo 1A	-5.1E-05	-40.049	-0.0003	0.3339	-1.7E-06	-30.2818
1428	1	Extremo 1A	-5.1E-05	-35.635	-0.0003	0.3339	0.00015	-11.3605
1428	0	Extremo 2A	-5.1E-05	-44.464	-0.0003	0.3339	-0.00015	-51.41
1428	0.5	Extremo 2A	-5.1E-05	-40.049	-0.0003	0.3339	-1.7E-06	-30.2818
1428	1	Extremo 2A	-5.1E-05	-35.635	-0.0003	0.3339	0.00015	-11.3605
1429	0	Extremo 1A	-5E-06	-19.552	-8.1E-05	-0.282	-3E-05	-10.5897
1429	0.3	Extremo 1A	-5E-06	-17.467	-8.1E-05	-0.282	-5.3E-06	-5.0368
1429	0.6	Extremo 1A	-5E-06	-15.381	-8.1E-05	-0.282	1.9E-05	-0.1098
1429	0	Extremo 2A	-5E-06	-19.552	-8.1E-05	-0.282	-3E-05	-10.5897
1429	0.3	Extremo 2A	-5E-06	-17.467	-8.1E-05	-0.282	-5.3E-06	-5.0368
1429	0.6	Extremo 2A	-5E-06	-15.381	-8.1E-05	-0.282	1.9E-05	-0.1098
1430	0	Extremo 1A	-9.7E-07	15.544	1.9E-05	1.0424	5.1E-06	-0.0073
1430	0.3	Extremo 1A	-9.7E-07	17.629	1.9E-05	1.0424	-5.4E-07	-4.9833
1430	0.6	Extremo 1A	-9.7E-07	19.715	1.9E-05	1.0424	-6.2E-06	-10.585
1430	0	Extremo 2A	-9.7E-07	15.544	1.9E-05	1.0424	5.1E-06	-0.0073
1430	0.3	Extremo 2A	-9.7E-07	17.629	1.9E-05	1.0424	-5.4E-07	-4.9833
1430	0.6	Extremo 2A	-9.7E-07	19.715	1.9E-05	1.0424	-6.2E-06	-10.585
1431	0	Extremo 1A	-1E-05	37.838	7.6E-05	2.6793	4.2E-05	-10.7659
1431	0.5	Extremo 1A	-1E-05	42.252	7.6E-05	2.6793	4.1E-06	-30.7886
1431	1	Extremo 1A	-1E-05	46.667	7.6E-05	2.6793	-3.4E-05	-53.0183
1431	0	Extremo 2A	-1E-05	37.838	7.6E-05	2.6793	4.2E-05	-10.7659
1431	0.5	Extremo 2A	-1E-05	42.252	7.6E-05	2.6793	4.1E-06	-30.7886
1431	1	Extremo 2A	-1E-05	46.667	7.6E-05	2.6793	-3.4E-05	-53.0183
1433	0	Extremo 1A	-3.9E-05	-46.957	-0.00023	-1.4032	-0.00012	-53.8242
1433	0.5	Extremo 1A	-3.9E-05	-42.542	-0.00023	-1.4032	-1.1E-06	-31.4494
1433	1	Extremo 1A	-3.9E-05	-38.128	-0.00023	-1.4032	0.00011	-11.2817
1433	0	Extremo 2A	-3.9E-05	-46.957	-0.00023	-1.4032	-0.00012	-53.8242
1433	0.5	Extremo 2A	-3.9E-05	-42.542	-0.00023	-1.4032	-1.1E-06	-31.4494
1433	1	Extremo 2A	-3.9E-05	-38.128	-0.00023	-1.4032	0.00011	-11.2817
1434	0	Extremo 1A	-3.8E-06	-19.884	-6.3E-05	-0.7524	-2.3E-05	-10.7363
1434	0.3	Extremo 1A	-3.8E-06	-17.798	-6.3E-05	-0.7524	-4.1E-06	-5.084
1434	0.6	Extremo 1A	-3.8E-06	-15.712	-6.3E-05	-0.7524	1.5E-05	-0.0574
1434	0	Extremo 2A	-3.8E-06	-19.884	-6.3E-05	-0.7524	-2.3E-05	-10.7363
1434	0.3	Extremo 2A	-3.8E-06	-17.798	-6.3E-05	-0.7524	-4.1E-06	-5.084
1434	0.6	Extremo 2A	-3.8E-06	-15.712	-6.3E-05	-0.7524	1.5E-05	-0.0574
1435	0	Extremo 1A	-8.2E-07	15.498	1.6E-05	0.8905	4.2E-06	0.1556
1435	0.3	Extremo 1A	-8.2E-07	17.584	1.6E-05	0.8905	-5E-07	-4.8066
1435	0.6	Extremo 1A	-8.2E-07	19.669	1.6E-05	0.8905	-5.2E-06	-10.3945
1435	0	Extremo 2A	-8.2E-07	15.498	1.6E-05	0.8905	4.2E-06	0.1556
1435	0.3	Extremo 2A	-8.2E-07	17.584	1.6E-05	0.8905	-5E-07	-4.8066
1435	0.6	Extremo 2A	-8.2E-07	19.669	1.6E-05	0.8905	-5.2E-06	-10.3945
1436	0	Extremo 1A	-8.7E-06	40.006	6.3E-05	3.0192	3.5E-05	-9.3462
1436	0.5	Extremo 1A	-8.7E-06	44.42	6.3E-05	3.0192	3.1E-06	-30.4528
1436	1	Extremo 1A	-8.7E-06	48.834	6.3E-05	3.0192	-2.8E-05	-53.7666
1436	0	Extremo 2A	-8.7E-06	40.006	6.3E-05	3.0192	3.5E-05	-9.3462
1436	0.5	Extremo 2A	-8.7E-06	44.42	6.3E-05	3.0192	3.1E-06	-30.4528
1436	1	Extremo 2A	-8.7E-06	48.834	6.3E-05	3.0192	-2.8E-05	-53.7665
1438	0	Extremo 1A	-3E-05	-50.505	-0.00018	-2.6826	-8.9E-05	-55.8488
1438	0.5	Extremo 1A	-3E-05	-46.091	-0.00018	-2.6826	-7.5E-07	-31.6999
1438	1	Extremo 1A	-3E-05	-41.677	-0.00018	-2.6826	8.7E-05	-9.758
1438	0	Extremo 2A	-3E-05	-50.505	-0.00018	-2.6826	-8.9E-05	-55.8488
1438	0.5	Extremo 2A	-3E-05	-46.091	-0.00018	-2.6826	-7.5E-07	-31.6999
1438	1	Extremo 2A	-3E-05	-41.677	-0.00018	-2.6826	8.7E-05	-9.758
1439	0	Extremo 1A	-2.9E-06	-19.994	-4.8E-05	-0.8213	-1.8E-05	-10.6144
1439	0.3	Extremo 1A	-2.9E-06	-17.908	-4.8E-05	-0.8213	-3.1E-06	-4.9292
1439	0.6	Extremo 1A	-2.9E-06	-15.822	-4.8E-05	-0.8213	1.1E-05	0.1302
1439	0	Extremo 2A	-2.9E-06	-19.994	-4.8E-05	-0.8213	-1.8E-05	-10.6144
1439	0.3	Extremo 2A	-2.9E-06	-17.908	-4.8E-05	-0.8213	-3.1E-06	-4.9292
1439	0.6	Extremo 2A	-2.9E-06	-15.822	-4.8E-05	-0.8213	1.1E-05	0.1302
1440	0	Extremo 1A	-6.9E-07	15.273	1.3E-05	3.3E-06	3.4E-06	0.2143
1440	0.3	Extremo 1A	-6.9E-07	17.359	1.3E-05	3.3E-06	-4.4E-07	-4.6805
1440	0.6	Extremo 1A	-6.9E-07	19.445	1.3E-05	3.3E-06	-4.3E-06	-10.2011
1440	0	Extremo 2A	-6.9E-07	15.273	1.3E-05	3.3E-06	3.4E-06	0.2143
1440	0.3	Extremo 2A	-6.9E-07	17.359	1.3E-05	3.3E-06	-4.4E-07	-4.6805
1440	0.6	Extremo 2A	-6.9E-07	19.445	1.3E-05	3.3E-06	-4.3E-06	-10.2011
1441	0	Extremo 1A	-7.3E-06	38.93	5.2E-05	0.0035	2.8E-05	-8.5996
1441	0.5	Extremo 1A	-7.3E-06	43.344	5.2E-05	0.0035	2.4E-06	-29.1681
1441	1	Extremo 1A	-7.3E-06	47.758	5.2E-05	0.0035	-2.4E-05	-51.9436
1441	0	Extremo 2A	-7.3E-06	38.93	5.2E-05	0.0035	2.8E-05	-8.5996
1441	0.5	Extremo 2A	-7.3E-06	43.344	5.2E-05	0.0035	2.4E-06	-29.1681
1441	1	Extremo 2A	-7.3E-06	47.758	5.2E-05	0.0035	-2.4E-05	-51.9436
1443	0	Extremo 1A	-2.3E-05	-49.922	-0.00014	-0.0069	-6.8E-05	-54.3439
1443	0.5	Extremo 1A	-2.3E-05	-45.508	-0.00014	-0.0069	-4.9E-07	-30.4864
1443	1	Extremo 1A	-2.3E-05	-41.094	-0.00014	-0.0069	6.7E-05	-8.836
1443	0	Extremo 2A	-2.3E-05	-49.922	-0.00014	-0.0069	-6.8E-05	-54.3439
1443	0.5	Extremo 2A	-2.3E-05	-45.508	-0.00014	-0.0069	-4.9E-07	-30.4864
1443	1	Extremo 2A	-2.3E-05	-41.094	-0.00014	-0.0069	6.7E-05	-8.836
1444	0	Extremo 1A	-2.3E-06	-19.801	-3.7E-05	-0.0014	-1.4E-05	-10.4202
1444	0.3	Extremo 1A	-2.3E-06	-17.715	-3.7E-05	-0.0014	-2.4E-06	-4.7928
1444	0.6	Extremo 1A	-2.3E-06	-15.629	-3.7E-05	-0.0014	8.8E-06	0.2088
1444	0	Extremo 2A	-2.3E-06	-19.801	-3.7E-05	-0.0014	-1.4E-05	-10.4202
1444	0.3	Extremo 2A	-2.3E-06	-17.715	-3.7E-05	-0.0014	-2.4E-06	-4.7928
1444	0.6	Extremo 2A	-2.3E-06	-15.629	-3.7E-05	-0.0014	8.8E-06	0.2088
1445	0	Extremo 1A	-5.7E-07	15.498	1.1E-05	-0.8905	2.8E-06	0.1556
1445	0.3	Extremo 1A	-5.7E-07	17.584	1.1E-05	-0.8905	-3.9E-07	-4.8066
1445	0.6	Extremo 1A	-5.7E-07	19.669	1.1E-05	-0.8905	-3.6E-06	-10.3945
1445	0	Extremo 2A	-5.7E-07	15.498	1.1E-05	-0.8905	2.8E-06	0.1556
1445	0.3	Extremo 2A	-5.7E-07	17.584	1.1E-05	-0.8905	-3.9E-07	-4.8066
1445	0.6	Extremo 2A	-5.7E-07	19.669	1.1E-05	-0.8905	-3.6E-06	-10.3945
1446	0	Extremo 1A	-6E-06	40.006	4.2E-05	-3.0123	2.3E-05	-9.3462
1446	0.5	Extremo 1A	-6E-06	44.42	4.2E-05	-3.0123	1.8E-06	-30.4529
1446	1	Extremo 1A	-6E-06	48.835	4.2E-05	-3.0123	-1.9E-05	-53.7666
1446	0	Extremo 2A	-6E-06	40.006	4.2E-05	-3.0123	2.3E-05	-9.3462
1446	0.5	Extremo 2A	-6E-06	44.42	4.2E-05	-3.0123	1.8E-06	-30.4529
1446	1	Extremo 2A	-6E-06	48.834	4.2E-05	-3.0123	-1.9E-05	-53.7666
1448	0	Extremo 1A	-1.8E-05	-50.505	-0.00011	2.6687	-5.3E-05	-55.8489
1448	0.5	Extremo 1A	-1.8E-05	-46.091	-0.00011	2.6687	-3.1E-07	-31.6999
1448	1	Extremo 1A	-1.8E-05	-41.677	-0.00011	2.6687	5.2E-05	-9.758
1448	0	Extremo 2A	-1.8E-05	-50.505	-0.00011	2.6687	-5.3E-05	-55.8488
1448	0.5	Extremo 2A	-1.8E-05	-46.091	-0.00011	2.6687	-3.1E-07	-31.6999
1448	1	Extremo 2A	-1.8E-05	-41.677	-0.00011	2.6687	5.2E-05	-9.758
1449	0	Extremo 1A	-1.7E-06	-19.994	-2.9E-05	0.8185	-1E-05	-10.6144
1449	0.3	Extremo 1A	-1.7E-06	-17.908	-2.9E-05	0.8185	-1.8E-06	-4.9292
1449	0.6	Extremo 1A	-1.7E-06	-15.822	-2.9E-05	0.8185	6.8E-06	0.1302
1449	0	Extremo 2A	-1.7E-06	-19.994	-2.9E-05	0.8185	-1E-05	-10.6144
1449	0.3	Extremo 2A	-1.7E-06	-17.908	-2.9E-05	0.8185	-1.8E-06	-4.9292
1449	0.6	Extremo 2A	-1.7E-06	-15.822	-2.9E-05	0.8185	6.8E-06	0.1302
1450	0	Extremo 1A	-4.7E-07	15.544	8.8E-06	-1.0424	2.3E-06	-0.0073
1450	0.3	Extremo 1A	-4.7E-07	17.629	8.8E-06	-1.0424	-3.4E-07	-4.9833
1450	0.6	Extremo 1A	-4.7E-07	19.715	8.8E-06	-1.0424	-3E-06	-10.585
1450	0	Extremo 2A	-4.7E-07	15.544	8.8E-06	-1.0424	2.3E-06	-0.0073
1450	0.3	Extremo 2A	-4.7E-07	17.629	8.8E-06	-1.0424	-3.4E-07	-4.9833
1450	0.6	Extremo 2A	-4.7E-07	19.715	8.8E-06	-1.0424	-3E-06	-10.585
1451	0	Extremo 1A	-5E-06	37.838	3.5E-05	-2.6722	1.9E-05	-10.766
1451	0.5	Extremo 1A	-5E-06	42.253	3.5E-05	-2.6722	1.4E-06	-30.7887
1451	1	Extremo 1A	-5E-06	46.667	3.5E-05	-2.6722	-1.6E-05	-53.0185
1451	0	Extremo 2A	-5E-06	37.838	3.5E-05	-2.6722	1.9E-05	-10.766
1451	0.5	Extremo 2A	-5E-06	42.253	3.5E-05	-2.6722	1.4E-06	-30.7887
1451	1	Extremo 2A	-5E-06	46.667	3.5E-05	-2.6722	-1.6E-05	-53.0185
1453	0	Extremo 1A	-1.4E-05	-46.957	-8.1E-05	1.3892	-4.1E-05	-53.8243
1453	0.5	Extremo 1A	-1.4E-05	-42.543	-8.1E-05	1.3892	-1.9E-07	-31.4495
1453	1	Extremo 1A	-1.4E-05	-38.128	-8.1E-05	1.3892	4E-05	-11.2817
1453	0	Extremo 2A	-1.4E-05	-46.957	-8.1E-05	1.3892	-4.1E-05	-53.8243
1453	0.5	Extremo 2A	-1.4E-05	-42.543	-8.1E-05	1.3892	-1.9E-07	-31.4495
1453	1	Extremo 2A	-1.4E-05	-38.128	-8.1E-05	1.3892	4E-05	-11.2817
1454	0	Extremo 1A	-1.4E-06	-19.884	-2.2E-05	0.7496	-8.1E-06	-10.7363
1454	0.3	Extremo 1A	-1.4E-06	-17.798	-2.2E-05	0.7496	-1.4E-06	-5.084
1454	0.6	Extremo 1A	-1.4E-06	-15.712	-2.2E-05	0.7496	5.3E-06	-0.0574
1454	0	Extremo 2A	-1.4E-06	-19.884	-2.2E-05	0.7496	-8.1E-06	-10.7363
1454	0.3	Extremo 2A	-1.4E-06	-17.798	-2.2E-05	0.7496	-1.4E-06	-5.084
1454	0.6	Extremo 2A	-1.4E-06	-15.712	-2.2E-05	0.7496	5.3E-06	-0.0574
1455	0	Extremo 1A	-3.9E-07	15.379	7.2E-06	-0.752	1.9E-06	-0.0788
1455	0.3	Extremo 1A	-3.9E-07	17.465	7.2E-06	-0.752	-2.9E-07	-5.0055
1455	0.6	Extremo 1A	-3.9E-07	19.551	7.2E-06	-0.752	-2.4E-06	-10.558
1455	0	Extremo 2A	-3.9E-07	15.379	7.2E-06	-0.752	1.9E-06	-0.0788
1455	0.3	Extremo 2A	-3.9E-07	17.465	7.2E-06	-0.752	-2.9E-07	-5.0055
1455	0.6	Extremo 2A	-3.9E-07	19.551	7.2E-06	-0.752	-2.4E-06	-10.558
1456	0	Extremo 1A	-4.1E-06	36.038	2.8E-05	-1.4628	1.5E-05	-11.1327
1456	0.5	Extremo 1A	-4.1E-06	40.452	2.8E-05	-1.4628	1E-06	-30.2554
1456	1	Extremo 1A	-4.1E-06	44.866	2.8E-05	-1.4628	-1.3E-05	-51.5851
1456	0	Extremo 2A	-4.1E-06	36.038	2.8E-05	-1.4628	1.5E-05	-11.1327

1456	0.5	Extremo 2A	-4.1E-06	40.452	2.8E-05	-1.4628	1E-06	-30.2554
1456	1	Extremo 2A	-4.1E-06	44.866	2.8E-05	-1.4628	-1.3E-05	-51.5851
1458	0	Extremo 1A	-1.1E-05	-44.464	-6.3E-05	-0.3479	-3.2E-05	-51.4102
1458	0.5	Extremo 1A	-1.1E-05	-40.05	-6.3E-05	-0.3479	-1.1E-07	-30.2819
1458	1	Extremo 1A	-1.1E-05	-35.636	-6.3E-05	-0.3479	3.1E-05	-11.3606
1458	0	Extremo 2A	-1.1E-05	-44.464	-6.3E-05	-0.3479	-3.2E-05	-51.4102
1458	0.5	Extremo 2A	-1.1E-05	-40.05	-6.3E-05	-0.3479	-1.1E-07	-30.2819
1458	1	Extremo 2A	-1.1E-05	-35.636	-6.3E-05	-0.3479	3.1E-05	-11.3606
1459	0	Extremo 1A	-1E-06	-19.552	-1.7E-05	0.2791	-6.3E-06	-10.5897
1459	0.3	Extremo 1A	-1E-06	-17.467	-1.7E-05	0.2791	-1.1E-06	-5.0369
1459	0.6	Extremo 1A	-1E-06	-15.381	-1.7E-05	0.2791	4.1E-06	-0.1098
1459	0	Extremo 2A	-1E-06	-19.552	-1.7E-05	0.2791	-6.3E-06	-10.5897
1459	0.3	Extremo 2A	-1E-06	-17.467	-1.7E-05	0.2791	-1.1E-06	-5.0369
1459	0.6	Extremo 2A	-1E-06	-15.381	-1.7E-05	0.2791	4.1E-06	-0.1098
1460	0	Extremo 1A	-3.2E-07	15.222	5.8E-06	-0.4425	1.5E-06	-0.0721
1460	0.3	Extremo 1A	-3.2E-07	17.308	5.8E-06	-0.4425	-2.4E-07	-4.9516
1460	0.6	Extremo 1A	-3.2E-07	19.394	5.8E-06	-0.4425	-2E-06	-10.4569
1460	0	Extremo 2A	-3.2E-07	15.222	5.8E-06	-0.4425	1.5E-06	-0.0721
1460	0.3	Extremo 2A	-3.2E-07	17.308	5.8E-06	-0.4425	-2.4E-07	-4.9516
1460	0.6	Extremo 2A	-3.2E-07	19.394	5.8E-06	-0.4425	-2E-06	-10.4569
1461	0	Extremo 1A	-3.4E-06	35.328	2.3E-05	-0.6667	1.2E-05	-10.9195
1461	0.5	Extremo 1A	-3.4E-06	39.742	2.3E-05	-0.6667	7.8E-07	-29.6872
1461	1	Extremo 1A	-3.4E-06	44.156	2.3E-05	-0.6667	-1.1E-05	-50.6619
1461	0	Extremo 2A	-3.4E-06	35.328	2.3E-05	-0.6667	1.2E-05	-10.9195
1461	0.5	Extremo 2A	-3.4E-06	39.742	2.3E-05	-0.6667	7.8E-07	-29.6872
1461	1	Extremo 2A	-3.4E-06	44.156	2.3E-05	-0.6667	-1.1E-05	-50.6619
1463	0	Extremo 1A	-8.3E-06	-43.557	-4.9E-05	-1.1181	-2.4E-05	-49.9643
1463	0.5	Extremo 1A	-8.3E-06	-39.143	-4.9E-05	-1.1181	-6E-08	-29.2895
1463	1	Extremo 1A	-8.3E-06	-34.729	-4.9E-05	-1.1181	2.4E-05	-10.8217
1463	0	Extremo 2A	-8.3E-06	-43.557	-4.9E-05	-1.1181	-2.4E-05	-49.9643
1463	0.5	Extremo 2A	-8.3E-06	-39.143	-4.9E-05	-1.1181	-6E-08	-29.2895
1463	1	Extremo 2A	-8.3E-06	-34.729	-4.9E-05	-1.1181	2.4E-05	-10.8217
1464	0	Extremo 1A	-8.1E-07	-19.288	-1.3E-05	-0.0659	-4.8E-06	-10.3913
1464	0.3	Extremo 1A	-8.1E-07	-17.202	-1.3E-05	-0.0659	-8.4E-07	-4.9179
1464	0.6	Extremo 1A	-8.1E-07	-15.116	-1.3E-05	-0.0659	3.2E-06	-0.0703
1464	0	Extremo 2A	-8.1E-07	-19.288	-1.3E-05	-0.0659	-4.8E-06	-10.3913
1464	0.3	Extremo 2A	-8.1E-07	-17.202	-1.3E-05	-0.0659	-8.4E-07	-4.9179
1464	0.6	Extremo 2A	-8.1E-07	-15.116	-1.3E-05	-0.0659	3.2E-06	-0.0703
1465	0	Extremo 1A	-2.6E-07	15.134	4.7E-06	-0.2399	1.2E-06	-0.048
1465	0.3	Extremo 1A	-2.6E-07	17.22	4.7E-06	-0.2399	-2E-07	-4.9012
1465	0.6	Extremo 1A	-2.6E-07	19.306	4.7E-06	-0.2399	-1.6E-06	-10.3801
1465	0	Extremo 2A	-2.6E-07	15.134	4.7E-06	-0.2399	1.2E-06	-0.048
1465	0.3	Extremo 2A	-2.6E-07	17.22	4.7E-06	-0.2399	-2E-07	-4.9012
1465	0.6	Extremo 2A	-2.6E-07	19.306	4.7E-06	-0.2399	-1.6E-06	-10.3801
1466	0	Extremo 1A	-2.7E-06	35.161	1.8E-05	-0.302	9.8E-06	-10.6705
1466	0.5	Extremo 1A	-2.7E-06	39.575	1.8E-05	-0.302	5.9E-07	-29.3547
1466	1	Extremo 1A	-2.7E-06	43.989	1.8E-05	-0.302	-8.7E-06	-50.2459
1466	0	Extremo 2A	-2.7E-06	35.161	1.8E-05	-0.302	9.8E-06	-10.6705
1466	0.5	Extremo 2A	-2.7E-06	39.575	1.8E-05	-0.302	5.9E-07	-29.3547
1466	1	Extremo 2A	-2.7E-06	43.989	1.8E-05	-0.302	-8.7E-06	-50.2459
1468	0	Extremo 1A	-6.4E-06	-43.334	-3.8E-05	-1.1237	-1.9E-05	-49.283
1468	0.5	Extremo 1A	-6.4E-06	-38.919	-3.8E-05	-1.1237	-2.6E-08	-28.7197
1468	1	Extremo 1A	-6.4E-06	-34.505	-3.8E-05	-1.1237	1.9E-05	-10.3635
1468	0	Extremo 2A	-6.4E-06	-43.334	-3.8E-05	-1.1236	-1.9E-05	-49.283
1468	0.5	Extremo 2A	-6.4E-06	-38.919	-3.8E-05	-1.1236	-2.6E-08	-28.7197
1468	1	Extremo 2A	-6.4E-06	-34.505	-3.8E-05	-1.1236	1.9E-05	-10.3635
1469	0	Extremo 1A	-6.2E-07	-19.141	-1E-05	-0.186	-3.7E-06	-10.2555
1469	0.3	Extremo 1A	-6.2E-07	-17.055	-1E-05	-0.186	-6.5E-07	-4.8261
1469	0.6	Extremo 1A	-6.2E-07	-14.969	-1E-05	-0.186	2.5E-06	-0.0224
1469	0	Extremo 2A	-6.2E-07	-19.141	-1E-05	-0.186	-3.7E-06	-10.2555
1469	0.3	Extremo 2A	-6.2E-07	-17.055	-1E-05	-0.186	-6.5E-07	-4.8261
1469	0.6	Extremo 2A	-6.2E-07	-14.969	-1E-05	-0.186	2.5E-06	-0.0224
1470	0	Extremo 1A	-2.1E-07	15.097	3.8E-06	-0.1192	9.8E-07	-0.0317
1470	0.3	Extremo 1A	-2.1E-07	17.183	3.8E-06	-0.1192	-1.7E-07	-4.8737
1470	0.6	Extremo 1A	-2.1E-07	19.269	3.8E-06	-0.1192	-1.3E-06	-10.3414
1470	0	Extremo 2A	-2.1E-07	15.097	3.8E-06	-0.1192	9.8E-07	-0.0317
1470	0.3	Extremo 2A	-2.1E-07	17.183	3.8E-06	-0.1192	-1.7E-07	-4.8737
1470	0.6	Extremo 2A	-2.1E-07	19.269	3.8E-06	-0.1192	-1.3E-06	-10.3414
1471	0	Extremo 1A	-2.2E-06	35.153	1.5E-05	-0.1415	7.9E-06	-10.5314
1471	0.5	Extremo 1A	-2.2E-06	39.567	1.5E-05	-0.1415	4.5E-07	-29.2113
1471	1	Extremo 1A	-2.2E-06	43.981	1.5E-05	-0.1415	-7E-06	-50.0982
1471	0	Extremo 2A	-2.2E-06	35.153	1.5E-05	-0.1415	7.9E-06	-10.5314
1471	0.5	Extremo 2A	-2.2E-06	39.567	1.5E-05	-0.1415	4.5E-07	-29.2113
1471	1	Extremo 2A	-2.2E-06	43.981	1.5E-05	-0.1415	-7E-06	-50.0982
1473	0	Extremo 1A	-5E-06	-43.295	-2.9E-05	-0.762	-1.5E-05	-48.9973
1473	0.5	Extremo 1A	-5E-06	-38.881	-2.9E-05	-0.762	-4.7E-09	-28.4534
1473	1	Extremo 1A	-5E-06	-34.467	-2.9E-05	-0.762	1.5E-05	-10.1165
1473	0	Extremo 2A	-5E-06	-43.295	-2.9E-05	-0.762	-1.5E-05	-48.9973
1473	0.5	Extremo 2A	-5E-06	-38.881	-2.9E-05	-0.762	-4.7E-09	-28.4534
1473	1	Extremo 2A	-5E-06	-34.467	-2.9E-05	-0.762	1.5E-05	-10.1165
1474	0	Extremo 1A	-4.8E-07	-19.074	-8E-06	-0.157	-2.9E-06	-10.1859
1474	0.3	Extremo 1A	-4.8E-07	-16.988	-8E-06	-0.157	-5E-07	-4.7767
1474	0.6	Extremo 1A	-4.8E-07	-14.902	-8E-06	-0.157	1.9E-06	0.0068
1474	0	Extremo 2A	-4.8E-07	-19.074	-8E-06	-0.157	-2.9E-06	-10.1859
1474	0.3	Extremo 2A	-4.8E-07	-16.988	-8E-06	-0.157	-5E-07	-4.7767
1474	0.6	Extremo 2A	-4.8E-07	-14.902	-8E-06	-0.157	1.9E-06	0.0068
1475	0	Extremo 1A	-1.7E-07	15.085	3.1E-06	-0.0366	7.9E-07	-0.0249
1475	0.3	Extremo 1A	-1.7E-07	17.171	3.1E-06	-0.0366	-1.4E-07	-4.8632
1475	0.6	Extremo 1A	-1.7E-07	19.257	3.1E-06	-0.0366	-1.1E-06	-10.3273
1475	0	Extremo 2A	-1.7E-07	15.085	3.1E-06	-0.0366	7.9E-07	-0.0249
1475	0.3	Extremo 2A	-1.7E-07	17.171	3.1E-06	-0.0366	-1.4E-07	-4.8632
1475	0.6	Extremo 2A	-1.7E-07	19.257	3.1E-06	-0.0366	-1.1E-06	-10.3273
1476	0	Extremo 1A	-1.8E-06	35.165	1.2E-05	-0.0456	6.3E-06	-10.4791
1476	0.5	Extremo 1A	-1.8E-06	39.579	1.2E-05	-0.0456	3.4E-07	-29.1651
1476	1	Extremo 1A	-1.8E-06	43.993	1.2E-05	-0.0456	-5.7E-06	-50.0582
1476	0	Extremo 2A	-1.8E-06	35.165	1.2E-05	-0.0457	6.3E-06	-10.4791
1476	0.5	Extremo 2A	-1.8E-06	39.579	1.2E-05	-0.0457	3.4E-07	-29.1651
1476	1	Extremo 2A	-1.8E-06	43.993	1.2E-05	-0.0457	-5.7E-06	-50.0582
1478	0	Extremo 1A	-3.9E-06	-43.29	-2.3E-05	-0.2618	-1.1E-05	-48.8962
1478	0.5	Extremo 1A	-3.9E-06	-38.876	-2.3E-05	-0.2618	7.9E-09	-28.3545
1478	1	Extremo 1A	-3.9E-06	-34.462	-2.3E-05	-0.2618	1.1E-05	-10.0198
1478	0	Extremo 2A	-3.9E-06	-43.29	-2.3E-05	-0.2618	-1.1E-05	-48.8962
1478	0.5	Extremo 2A	-3.9E-06	-38.876	-2.3E-05	-0.2618	7.9E-09	-28.3545
1478	1	Extremo 2A	-3.9E-06	-34.462	-2.3E-05	-0.2618	1.1E-05	-10.0198
1479	0	Extremo 1A	-3.7E-07	-19.049	-6.2E-06	-0.0581	-2.2E-06	-10.1588
1479	0.3	Extremo 1A	-3.7E-07	-16.963	-6.2E-06	-0.0581	-3.9E-07	-4.7571
1479	0.6	Extremo 1A	-3.7E-07	-14.877	-6.2E-06	-0.0581	1.5E-06	0.0189
1479	0	Extremo 2A	-3.7E-07	-19.049	-6.2E-06	-0.0581	-2.2E-06	-10.1588
1479	0.3	Extremo 2A	-3.7E-07	-16.963	-6.2E-06	-0.0581	-3.9E-07	-4.7571
1479	0.6	Extremo 2A	-3.7E-07	-14.877	-6.2E-06	-0.0581	1.5E-06	0.0189
1480	0	Extremo 1A	-1.4E-07	15.085	2.5E-06	0.036	6.3E-07	-0.0249
1480	0.3	Extremo 1A	-1.4E-07	17.171	2.5E-06	0.036	-1.2E-07	-4.8633
1480	0.6	Extremo 1A	-1.4E-07	19.257	2.5E-06	0.036	-8.6E-07	-10.3274
1480	0	Extremo 2A	-1.4E-07	15.085	2.5E-06	0.036	6.3E-07	-0.0249
1480	0.3	Extremo 2A	-1.4E-07	17.171	2.5E-06	0.036	-1.2E-07	-4.8633
1480	0.6	Extremo 2A	-1.4E-07	19.257	2.5E-06	0.036	-8.6E-07	-10.3274
1481	0	Extremo 1A	-1.5E-06	35.165	9.7E-06	0.0382	5.1E-06	-10.4793
1481	0.5	Extremo 1A	-1.5E-06	39.579	9.7E-06	0.0382	2.6E-07	-29.1653
1481	1	Extremo 1A	-1.5E-06	43.993	9.7E-06	0.0382	-4.6E-06	-50.0584
1481	0	Extremo 2A	-1.5E-06	35.165	9.7E-06	0.0382	5.1E-06	-10.4793
1481	0.5	Extremo 2A	-1.5E-06	39.579	9.7E-06	0.0382	2.6E-07	-29.1653
1481	1	Extremo 2A	-1.5E-06	43.993	9.7E-06	0.0382	-4.6E-06	-50.0584
1483	0	Extremo 1A	-3E-06	-43.29	-1.8E-05	0.2721	-8.8E-06	-48.8963
1483	0.5	Extremo 1A	-3E-06	-38.876	-1.8E-05	0.2721	1.5E-08	-28.3546
1483	1	Extremo 1A	-3E-06	-34.462	-1.8E-05	0.2721	8.8E-06	-10.0199
1483	0	Extremo 2A	-3E-06	-43.29	-1.8E-05	0.2721	-8.8E-06	-48.8963
1483	0.5	Extremo 2A	-3E-06	-38.876	-1.8E-05	0.2721	1.5E-08	-28.3546
1483	1	Extremo 2A	-3E-06	-34.462	-1.8E-05	0.2721	8.8E-06	-10.0199
1484	0	Extremo 1A	-2.9E-07	-19.049	-4.8E-06	0.0601	-1.7E-06	-10.1588
1484	0.3	Extremo 1A	-2.9E-07	-16.963	-4.8E-06	0.0601	-3E-07	-4.7571
1484	0.6	Extremo 1A	-2.9E-07	-14.877	-4.8E-06	0.0601	1.1E-06	0.0189
1484	0	Extremo 2A	-2.9E-07	-19.049	-4.8E-06	0.0601	-1.7E-06	-10.1588
1484	0.3	Extremo 2A	-2.9E-07	-16.963	-4.8E-06	0.0601	-3E-07	-4.7571
1484	0.6	Extremo 2A	-2.9E-07	-14.877	-4.8E-06	0.0601	1.1E-06	0.0189
1485	0	Extremo 1A	-1.1E-07	15.097	2E-06	0.1188	5.1E-07	-0.0319
1485	0.3	Extremo 1A	-1.1E-07	17.183	2E-06	0.1188	-9.4E-08	-4.8739
1485	0.6	Extremo 1A	-1.1E-07	19.269	2E-06	0.1188	-7E-07	-10.3417
1485	0	Extremo 2A	-1.1E-07	15.097	2E-06	0.1188	5.1E-07	-0.0319
1485	0.3	Extremo 2A	-1.1E-07	17.183	2E-06	0.1188	-9.4E-08	-4.8739
1485	0.6	Extremo 2A	-1.1E-07	19.269	2E-06	0.1188	-7E-07	-10.3417
1486	0	Extremo 1A	-1.2E-06	35.153	7.7E-06	0.1343	4.1E-06	-10.5325
1486	0.5	Extremo 1A	-1.2E-06	39.567	7.7E-06	0.1343	2E-07	-29.2123
1486	1	Extremo 1A	-1.2E-06	43.981	7.7E-06	0.1343	-3.7E-06	-50.0992
1486	0	Extremo 2A	-1.2E-06	35.153	7.7E-06	0.1343	4.1E-06	-10.5325

1486	0.5	Extremo 2A	-1.2E-06	39.567	7.7E-06	0.1343	2E-07	-29.2123
1486	1	Extremo 2A	-1.2E-06	43.981	7.7E-06	0.1343	-3.7E-06	-50.0992
1488	0	Extremo 1A	-2.3E-06	-43.294	-1.4E-05	0.7722	-6.8E-06	-48.9978
1488	0.5	Extremo 1A	-2.3E-06	-38.88	-1.4E-05	0.7722	1.8E-08	-28.4541
1488	1	Extremo 1A	-2.3E-06	-34.466	-1.4E-05	0.7722	6.9E-06	-10.1174
1488	0	Extremo 2A	-2.3E-06	-43.294	-1.4E-05	0.7722	-6.8E-06	-48.9978
1488	0.5	Extremo 2A	-2.3E-06	-38.88	-1.4E-05	0.7722	1.8E-08	-28.4541
1488	1	Extremo 2A	-2.3E-06	-34.466	-1.4E-05	0.7722	6.9E-06	-10.1174
1489	0	Extremo 1A	-2.2E-07	-19.074	-3.7E-06	0.1589	-1.4E-06	-10.1862
1489	0.3	Extremo 1A	-2.2E-07	-16.988	-3.7E-06	0.1589	-2.3E-07	-4.7769
1489	0.6	Extremo 1A	-2.2E-07	-14.902	-3.7E-06	0.1589	8.9E-07	0.0066
1489	0	Extremo 2A	-2.2E-07	-19.074	-3.7E-06	0.1589	-1.4E-06	-10.1862
1489	0.3	Extremo 2A	-2.2E-07	-16.988	-3.7E-06	0.1589	-2.3E-07	-4.7769
1489	0.6	Extremo 2A	-2.2E-07	-14.902	-3.7E-06	0.1589	8.9E-07	0.0066
1490	0	Extremo 1A	-9.1E-08	15.135	1.6E-06	0.2404	4.1E-07	-0.0484
1490	0.3	Extremo 1A	-9.1E-08	17.221	1.6E-06	0.2404	-7.7E-08	-4.9018
1490	0.6	Extremo 1A	-9.1E-08	19.307	1.6E-06	0.2404	-5.6E-07	-10.3809
1490	0	Extremo 2A	-9.1E-08	15.135	1.6E-06	0.2404	4.1E-07	-0.0484
1490	0.3	Extremo 2A	-9.1E-08	17.221	1.6E-06	0.2404	-7.7E-08	-4.9018
1490	0.6	Extremo 2A	-9.1E-08	19.307	1.6E-06	0.2404	-5.6E-07	-10.3809
1491	0	Extremo 1A	-9.5E-07	35.162	6.2E-06	0.2961	3.3E-06	-10.6734
1491	0.5	Extremo 1A	-9.5E-07	39.576	6.2E-06	0.2961	1.5E-07	-29.3577
1491	1	Extremo 1A	-9.5E-07	43.99	6.2E-06	0.2961	-3E-06	-50.249
1491	0	Extremo 2A	-9.5E-07	35.162	6.2E-06	0.2961	3.3E-06	-10.6734
1491	0.5	Extremo 2A	-9.5E-07	39.576	6.2E-06	0.2961	1.5E-07	-29.3577
1491	1	Extremo 2A	-9.5E-07	43.99	6.2E-06	0.2961	-3E-06	-50.249
1493	0	Extremo 1A	-1.8E-06	-43.333	-1.1E-05	1.1331	-5.3E-06	-49.285
1493	0.5	Extremo 1A	-1.8E-06	-38.919	-1.1E-05	1.1331	1.9E-08	-28.722
1493	1	Extremo 1A	-1.8E-06	-34.505	-1.1E-05	1.1331	5.3E-06	-10.366
1493	0	Extremo 2A	-1.8E-06	-43.333	-1.1E-05	1.1331	-5.3E-06	-49.285
1493	0.5	Extremo 2A	-1.8E-06	-38.919	-1.1E-05	1.1331	1.9E-08	-28.722
1493	1	Extremo 2A	-1.8E-06	-34.505	-1.1E-05	1.1331	5.3E-06	-10.366
1494	0	Extremo 1A	-1.7E-07	-19.142	-2.9E-06	0.1872	-1E-06	-10.2562
1494	0.3	Extremo 1A	-1.7E-07	-17.056	-2.9E-06	0.1872	-1.8E-07	-4.8266
1494	0.6	Extremo 1A	-1.7E-07	-14.97	-2.9E-06	0.1872	6.9E-07	-0.0227
1494	0	Extremo 2A	-1.7E-07	-19.142	-2.9E-06	0.1872	-1E-06	-10.2562
1494	0.3	Extremo 2A	-1.7E-07	-17.056	-2.9E-06	0.1872	-1.8E-07	-4.8266
1494	0.6	Extremo 2A	-1.7E-07	-14.97	-2.9E-06	0.1872	6.9E-07	-0.0227
1495	0	Extremo 1A	-7.3E-08	15.224	1.3E-06	0.4447	3.3E-07	-0.0727
1495	0.3	Extremo 1A	-7.3E-08	17.31	1.3E-06	0.4447	-6.3E-08	-4.9528
1495	0.6	Extremo 1A	-7.3E-08	19.396	1.3E-06	0.4447	-4.5E-07	-10.4587
1495	0	Extremo 2A	-7.3E-08	15.224	1.3E-06	0.4447	3.3E-07	-0.0727
1495	0.3	Extremo 2A	-7.3E-08	17.31	1.3E-06	0.4447	-6.3E-08	-4.9528
1495	0.6	Extremo 2A	-7.3E-08	19.396	1.3E-06	0.4447	-4.5E-07	-10.4587
1496	0	Extremo 1A	-7.6E-07	35.331	5E-06	0.6646	2.6E-06	-10.9253
1496	0.5	Extremo 1A	-7.6E-07	39.745	5E-06	0.6646	1.1E-07	-29.6942
1496	1	Extremo 1A	-7.6E-07	44.159	5E-06	0.6646	-2.4E-06	-50.6701
1496	0	Extremo 2A	-7.6E-07	35.331	5E-06	0.6646	2.6E-06	-10.9253
1496	0.5	Extremo 2A	-7.6E-07	39.745	5E-06	0.6646	1.1E-07	-29.6942
1496	1	Extremo 2A	-7.6E-07	44.159	5E-06	0.6646	-2.4E-06	-50.6701
1498	0	Extremo 1A	-1.4E-06	-43.557	-8.3E-06	1.1245	-4.1E-06	-49.9708
1498	0.5	Extremo 1A	-1.4E-06	-39.143	-8.3E-06	1.1245	1.8E-08	-29.2956
1498	1	Extremo 1A	-1.4E-06	-34.729	-8.3E-06	1.1245	4.2E-06	-10.8274
1498	0	Extremo 2A	-1.4E-06	-43.557	-8.3E-06	1.1245	-4.1E-06	-49.9708
1498	0.5	Extremo 2A	-1.4E-06	-39.143	-8.3E-06	1.1245	1.8E-08	-29.2956
1498	1	Extremo 2A	-1.4E-06	-34.729	-8.3E-06	1.1245	4.2E-06	-10.8274
1499	0	Extremo 1A	-1.4E-07	-19.289	-2.3E-06	0.0654	-8.1E-07	-10.3929
1499	0.3	Extremo 1A	-1.4E-07	-17.203	-2.3E-06	0.0654	-1.4E-07	-4.919
1499	0.6	Extremo 1A	-1.4E-07	-15.117	-2.3E-06	0.0654	5.4E-07	-0.071
1499	0	Extremo 2A	-1.4E-07	-19.289	-2.3E-06	0.0654	-8.1E-07	-10.3929
1499	0.3	Extremo 2A	-1.4E-07	-17.203	-2.3E-06	0.0654	-1.4E-07	-4.919
1499	0.6	Extremo 2A	-1.4E-07	-15.117	-2.3E-06	0.0654	5.4E-07	-0.071
1500	0	Extremo 1A	-5.9E-08	15.383	1E-06	0.7573	2.6E-07	-0.0796
1500	0.3	Extremo 1A	-5.9E-08	17.469	1E-06	0.7573	-5.1E-08	-5.0073
1500	0.6	Extremo 1A	-5.9E-08	19.555	1E-06	0.7573	-3.6E-07	-10.5609
1500	0	Extremo 2A	-5.9E-08	15.383	1E-06	0.7573	2.6E-07	-0.0796
1500	0.3	Extremo 2A	-5.9E-08	17.469	1E-06	0.7573	-5.1E-08	-5.0074
1500	0.6	Extremo 2A	-5.9E-08	19.555	1E-06	0.7573	-3.6E-07	-10.5609
1501	0	Extremo 1A	-6.1E-07	36.048	4E-06	1.4696	2.1E-06	-11.1412
1501	0.5	Extremo 1A	-6.1E-07	40.462	4E-06	1.4696	8.6E-08	-30.2689
1501	1	Extremo 1A	-6.1E-07	44.876	4E-06	1.4696	-1.9E-06	-51.6036
1501	0	Extremo 2A	-6.1E-07	36.048	4E-06	1.4696	2.1E-06	-11.1413

1501	0.5	Extremo 2A	-6.1E-07	40.462	4E-06	1.4696	8.6E-08	-30.2689
1501	1	Extremo 2A	-6.1E-07	44.876	4E-06	1.4696	-1.9E-06	-51.6036
1503	0	Extremo 1A	-1.1E-06	-44.471	-6.5E-06	0.3459	-3.2E-06	-51.4272
1503	0.5	Extremo 1A	-1.1E-06	-40.057	-6.5E-06	0.3459	1.7E-08	-30.2952
1503	1	Extremo 1A	-1.1E-06	-35.643	-6.5E-06	0.3459	3.2E-06	-11.3701
1503	0	Extremo 2A	-1.1E-06	-44.471	-6.5E-06	0.3459	-3.2E-06	-51.4272
1503	0.5	Extremo 2A	-1.1E-06	-40.057	-6.5E-06	0.3459	1.7E-08	-30.2952
1503	1	Extremo 2A	-1.1E-06	-35.643	-6.5E-06	0.3459	3.2E-06	-11.3701
1504	0	Extremo 1A	-1.1E-07	-19.556	-1.8E-06	-0.2828	-6.3E-07	-10.5927
1504	0.3	Extremo 1A	-1.1E-07	-17.47	-1.8E-06	-0.2828	-1.1E-07	-5.0388
1504	0.6	Extremo 1A	-1.1E-07	-15.384	-1.8E-06	-0.2828	4.2E-07	-0.1107
1504	0	Extremo 2A	-1.1E-07	-19.556	-1.8E-06	-0.2828	-6.3E-07	-10.5928
1504	0.3	Extremo 2A	-1.1E-07	-17.47	-1.8E-06	-0.2828	-1.1E-07	-5.0388
1504	0.6	Extremo 2A	-1.1E-07	-15.384	-1.8E-06	-0.2828	4.2E-07	-0.1107
1505	0	Extremo 1A	-4.7E-08	15.549	8.3E-07	1.0508	2.1E-07	-0.0075
1505	0.3	Extremo 1A	-4.7E-08	17.635	8.3E-07	1.0508	-4.1E-08	-4.9851
1505	0.6	Extremo 1A	-4.7E-08	19.721	8.3E-07	1.0508	-2.9E-07	-10.5884
1505	0	Extremo 2A	-4.7E-08	15.549	8.3E-07	1.0508	2.1E-07	-0.0075
1505	0.3	Extremo 2A	-4.7E-08	17.635	8.3E-07	1.0508	-4.1E-08	-4.9851
1505	0.6	Extremo 2A	-4.7E-08	19.721	8.3E-07	1.0508	-2.9E-07	-10.5884
1506	0	Extremo 1A	-4.9E-07	37.867	3.2E-06	2.6929	1.6E-06	-10.7716
1506	0.5	Extremo 1A	-4.9E-07	42.281	3.2E-06	2.6929	6.6E-08	-30.8084
1506	1	Extremo 1A	-4.9E-07	46.695	3.2E-06	2.6929	-1.5E-06	-53.0523
1506	0	Extremo 2A	-4.9E-07	37.867	3.2E-06	2.693	1.6E-06	-10.7716
1506	0.5	Extremo 2A	-4.9E-07	42.281	3.2E-06	2.693	6.6E-08	-30.8084
1506	1	Extremo 2A	-4.9E-07	46.695	3.2E-06	2.693	-1.5E-06	-53.0523
1508	0	Extremo 1A	-8.4E-07	-46.984	-5E-06	-1.4066	-2.5E-06	-53.8597
1508	0.5	Extremo 1A	-8.4E-07	-42.57	-5E-06	-1.4066	1.5E-08	-31.4713
1508	1	Extremo 1A	-8.4E-07	-38.156	-5E-06	-1.4066	2.5E-06	-11.29
1508	0	Extremo 2A	-8.4E-07	-46.984	-5E-06	-1.4066	-2.5E-06	-53.8597
1508	0.5	Extremo 2A	-8.4E-07	-42.57	-5E-06	-1.4066	1.5E-08	-31.4713
1508	1	Extremo 2A	-8.4E-07	-38.156	-5E-06	-1.4066	2.5E-06	-11.29
1509	0	Extremo 1A	-8.2E-08	-19.89	-1.4E-06	-0.7573	-4.9E-07	-10.7403
1509	0.3	Extremo 1A	-8.2E-08	-17.804	-1.4E-06	-0.7573	-8.3E-08	-5.0862
1509	0.6	Extremo 1A	-8.2E-08	-15.718	-1.4E-06	-0.7573	3.3E-07	-0.0579
1509	0	Extremo 2A	-8.2E-08	-19.89	-1.4E-06	-0.7573	-4.9E-07	-10.7403
1509	0.3	Extremo 2A	-8.2E-08	-17.804	-1.4E-06	-0.7573	-8.3E-08	-5.0862
1509	0.6	Extremo 2A	-8.2E-08	-15.718	-1.4E-06	-0.7573	3.3E-07	-0.0579
1510	0	Extremo 1A	-3.8E-08	15.503	6.6E-07	0.8982	1.7E-07	0.157
1510	0.3	Extremo 1A	-3.8E-08	17.589	6.6E-07	0.8982	-3.3E-08	-4.8068
1510	0.6	Extremo 1A	-3.8E-08	19.675	6.6E-07	0.8982	-2.3E-07	-10.3963
1510	0	Extremo 2A	-3.8E-08	15.503	6.6E-07	0.8982	1.7E-07	0.157
1510	0.3	Extremo 2A	-3.8E-08	17.589	6.6E-07	0.8982	-3.3E-08	-4.8068
1510	0.6	Extremo 2A	-3.8E-08	19.675	6.6E-07	0.8982	-2.3E-07	-10.3963
1511	0	Extremo 1A	-3.9E-07	40.056	2.5E-06	3.0395	1.3E-06	-9.3387
1511	0.5	Extremo 1A	-3.9E-07	44.47	2.5E-06	3.0395	5E-08	-30.4702
1511	1	Extremo 1A	-3.9E-07	48.884	2.5E-06	3.0395	-1.2E-06	-53.8088
1511	0	Extremo 2A	-3.9E-07	40.056	2.5E-06	3.0395	1.3E-06	-9.3387
1511	0.5	Extremo 2A	-3.9E-07	44.47	2.5E-06	3.0395	5E-08	-30.4703
1511	1	Extremo 2A	-3.9E-07	48.884	2.5E-06	3.0395	-1.2E-06	-53.8088
1513	0	Extremo 1A	-6.6E-07	-50.561	-3.9E-06	-2.6966	-1.9E-06	-55.8998
1513	0.5	Extremo 1A	-6.6E-07	-46.147	-3.9E-06	-2.6966	1.3E-08	-31.723
1513	1	Extremo 1A	-6.6E-07	-41.732	-3.9E-06	-2.6966	2E-06	-9.7533
1513	0	Extremo 2A	-6.6E-07	-50.561	-3.9E-06	-2.6966	-1.9E-06	-55.8998
1513	0.5	Extremo 2A	-6.6E-07	-46.147	-3.9E-06	-2.6966	1.3E-08	-31.723
1513	1	Extremo 2A	-6.6E-07	-41.733	-3.9E-06	-2.6966	2E-06	-9.7533
1514	0	Extremo 1A	-6.4E-08	-20	-1.1E-06	-0.8266	-3.8E-07	-10.6173
1514	0.3	Extremo 1A	-6.4E-08	-17.914	-1.1E-06	-0.8266	-6.4E-08	-4.9301
1514	0.6	Extremo 1A	-6.4E-08	-15.828	-1.1E-06	-0.8266	2.5E-07	0.1313
1514	0	Extremo 2A	-6.4E-08	-20	-1.1E-06	-0.8266	-3.8E-07	-10.6173
1514	0.3	Extremo 2A	-6.4E-08	-17.914	-1.1E-06	-0.8266	-6.4E-08	-4.9301
1514	0.6	Extremo 2A	-6.4E-08	-15.828	-1.1E-06	-0.8266	2.5E-07	0.1313
1515	0	Extremo 1A	-3E-08	15.276	5.3E-07	-5.6E-05	1.3E-07	0.2162
1515	0.3	Extremo 1A	-3E-08	17.362	5.3E-07	-5.6E-05	-2.7E-08	-4.6795
1515	0.6	Extremo 1A	-3E-08	19.448	5.3E-07	-5.6E-05	-1.8E-07	-10.201
1515	0	Extremo 2A	-3E-08	15.276	5.3E-07	-5.6E-05	1.3E-07	0.2162
1515	0.3	Extremo 2A	-3E-08	17.362	5.3E-07	-5.6E-05	-2.7E-08	-4.6795
1515	0.6	Extremo 2A	-3E-08	19.448	5.3E-07	-5.6E-05	-1.8E-07	-10.201
1516	0	Extremo 1A	-3.1E-07	38.97	2E-06	-0.0011	1E-06	-8.5851
1516	0.5	Extremo 1A	-3.1E-07	43.384	2E-06	-0.0011	3.8E-08	-29.1735
1516	1	Extremo 1A	-3.1E-07	47.798	2E-06	-0.0011	-9.7E-07	-51.9689
1516	0	Extremo 2A	-3.1E-07	38.97	2E-06	-0.0011	1E-06	-8.5851

1516	0.5	Extremo 2A	-3.1E-07	43.384	2E-06	-0.0011	3.8E-08	-29.1735
1516	1	Extremo 2A	-3.1E-07	47.798	2E-06	-0.0011	-9.7E-07	-51.9689
1518	0	Extremo 1A	-5.1E-07	-49.973	-3E-06	0.0017	-1.5E-06	-54.382
1518	0.5	Extremo 1A	-5.1E-07	-45.559	-3E-06	0.0017	1.1E-08	-30.4992
1518	1	Extremo 1A	-5.1E-07	-41.144	-3E-06	0.0017	1.5E-06	-8.8234
1518	0	Extremo 2A	-5.1E-07	-49.973	-3E-06	0.0017	-1.5E-06	-54.382
1518	0.5	Extremo 2A	-5.1E-07	-45.559	-3E-06	0.0017	1.1E-08	-30.4992
1518	1	Extremo 2A	-5.1E-07	-41.145	-3E-06	0.0017	1.5E-06	-8.8234
1519	0	Extremo 1A	-4.9E-08	-19.806	-8.3E-07	0.00031	-3E-07	-10.4214
1519	0.3	Extremo 1A	-4.9E-08	-17.72	-8.3E-07	0.00031	-5E-08	-4.7925
1519	0.6	Extremo 1A	-4.9E-08	-15.634	-8.3E-07	0.00031	2E-07	0.2106
1519	0	Extremo 2A	-4.9E-08	-19.806	-8.3E-07	0.00031	-3E-07	-10.4214
1519	0.3	Extremo 2A	-4.9E-08	-17.72	-8.3E-07	0.00031	-5E-08	-4.7925
1519	0.6	Extremo 2A	-4.9E-08	-15.634	-8.3E-07	0.00031	2E-07	0.2106
1520	0	Extremo 1A	-2.4E-08	15.503	4.2E-07	-0.8983	1E-07	0.157
1520	0.3	Extremo 1A	-2.4E-08	17.589	4.2E-07	-0.8983	-2.1E-08	-4.8068
1520	0.6	Extremo 1A	-2.4E-08	19.675	4.2E-07	-0.8983	-1.5E-07	-10.3963
1520	0	Extremo 2A	-2.4E-08	15.503	4.2E-07	-0.8983	1E-07	0.157
1520	0.3	Extremo 2A	-2.4E-08	17.589	4.2E-07	-0.8983	-2.1E-08	-4.8068
1520	0.6	Extremo 2A	-2.4E-08	19.675	4.2E-07	-0.8983	-1.5E-07	-10.3963
1521	0	Extremo 1A	-2.5E-07	40.056	1.6E-06	-3.0417	8.3E-07	-9.3387
1521	0.5	Extremo 1A	-2.5E-07	44.47	1.6E-06	-3.0417	2.9E-08	-30.4702
1521	1	Extremo 1A	-2.5E-07	48.884	1.6E-06	-3.0417	-7.7E-07	-53.8088
1521	0	Extremo 2A	-2.5E-07	40.056	1.6E-06	-3.0417	8.3E-07	-9.3387
1521	0.5	Extremo 2A	-2.5E-07	44.47	1.6E-06	-3.0417	2.9E-08	-30.4702
1521	1	Extremo 2A	-2.5E-07	48.884	1.6E-06	-3.0417	-7.7E-07	-53.8088
1523	0	Extremo 1A	-4E-07	-50.561	-2.4E-06	2.6999	-1.2E-06	-55.8998
1523	0.5	Extremo 1A	-4E-07	-46.147	-2.4E-06	2.6999	9.7E-09	-31.723
1523	1	Extremo 1A	-4E-07	-41.732	-2.4E-06	2.6999	1.2E-06	-9.7533
1523	0	Extremo 2A	-4E-07	-50.561	-2.4E-06	2.7	-1.2E-06	-55.8998
1523	0.5	Extremo 2A	-4E-07	-46.147	-2.4E-06	2.7	9.7E-09	-31.723
1523	1	Extremo 2A	-4E-07	-41.733	-2.4E-06	2.7	1.2E-06	-9.7533
1524	0	Extremo 1A	-3.8E-08	-20	-6.4E-07	0.8273	-2.3E-07	-10.6173
1524	0.3	Extremo 1A	-3.8E-08	-17.914	-6.4E-07	0.8273	-3.9E-08	-4.9301
1524	0.6	Extremo 1A	-3.8E-08	-15.828	-6.4E-07	0.8273	1.5E-07	0.1313
1524	0	Extremo 2A	-3.8E-08	-20	-6.4E-07	0.8273	-2.3E-07	-10.6173
1524	0.3	Extremo 2A	-3.8E-08	-17.914	-6.4E-07	0.8273	-3.9E-08	-4.9301
1524	0.6	Extremo 2A	-3.8E-08	-15.828	-6.4E-07	0.8273	1.5E-07	0.1313
1525	0	Extremo 1A	-1.9E-08	15.549	3.3E-07	-1.051	8.3E-08	-0.0075
1525	0.3	Extremo 1A	-1.9E-08	17.635	3.3E-07	-1.051	-1.7E-08	-4.9851
1525	0.6	Extremo 1A	-1.9E-08	19.721	3.3E-07	-1.051	-1.2E-07	-10.5884
1525	0	Extremo 2A	-1.9E-08	15.549	3.3E-07	-1.051	8.3E-08	-0.0075
1525	0.3	Extremo 2A	-1.9E-08	17.635	3.3E-07	-1.051	-1.7E-08	-4.9851
1525	0.6	Extremo 2A	-1.9E-08	19.721	3.3E-07	-1.051	-1.2E-07	-10.5884
1526	0	Extremo 1A	-2E-07	37.867	1.3E-06	-2.6951	6.6E-07	-10.7716
1526	0.5	Extremo 1A	-2E-07	42.281	1.3E-06	-2.6951	2.2E-08	-30.8084
1526	1	Extremo 1A	-2E-07	46.695	1.3E-06	-2.6951	-6.1E-07	-53.0522
1526	0	Extremo 2A	-2E-07	37.867	1.3E-06	-2.6952	6.6E-07	-10.7716
1526	0.5	Extremo 2A	-2E-07	42.281	1.3E-06	-2.6952	2.2E-08	-30.8084
1526	1	Extremo 2A	-2E-07	46.695	1.3E-06	-2.6952	-6.1E-07	-53.0522
1528	0	Extremo 1A	-3.1E-07	-46.984	-1.9E-06	1.4099	-9.2E-07	-53.8597
1528	0.5	Extremo 1A	-3.1E-07	-42.57	-1.9E-06	1.4099	8.2E-09	-31.4713
1528	1	Extremo 1A	-3.1E-07	-38.156	-1.9E-06	1.4099	9.3E-07	-11.2899
1528	0	Extremo 2A	-3.1E-07	-46.984	-1.9E-06	1.4099	-9.2E-07	-53.8597
1528	0.5	Extremo 2A	-3.1E-07	-42.57	-1.9E-06	1.4099	8.2E-09	-31.4713
1528	1	Extremo 2A	-3.1E-07	-38.156	-1.9E-06	1.4099	9.3E-07	-11.29
1529	0	Extremo 1A	-3E-08	-19.89	-5E-07	0.758	-1.8E-07	-10.7403
1529	0.3	Extremo 1A	-3E-08	-17.804	-5E-07	0.758	-3E-08	-5.0862
1529	0.6	Extremo 1A	-3E-08	-15.718	-5E-07	0.758	1.2E-07	-0.0579
1529	0	Extremo 2A	-3E-08	-19.89	-5E-07	0.758	-1.8E-07	-10.7403
1529	0.3	Extremo 2A	-3E-08	-17.804	-5E-07	0.758	-3E-08	-5.0862
1529	0.6	Extremo 2A	-3E-08	-15.718	-5E-07	0.758	1.2E-07	-0.0579
1530	0	Extremo 1A	-1.5E-08	15.383	2.7E-07	-0.7574	6.6E-08	-0.0796
1530	0.3	Extremo 1A	-1.5E-08	17.469	2.7E-07	-0.7574	-1.4E-08	-5.0073
1530	0.6	Extremo 1A	-1.5E-08	19.555	2.7E-07	-0.7574	-9.4E-08	-10.5609
1530	0	Extremo 2A	-1.5E-08	15.383	2.7E-07	-0.7574	6.6E-08	-0.0796
1530	0.3	Extremo 2A	-1.5E-08	17.469	2.7E-07	-0.7574	-1.4E-08	-5.0073
1530	0.6	Extremo 2A	-1.5E-08	19.555	2.7E-07	-0.7574	-9.4E-08	-10.5609
1531	0	Extremo 1A	-1.6E-07	36.048	1E-06	-1.4718	5.2E-07	-11.1412
1531	0.5	Extremo 1A	-1.6E-07	40.462	1E-06	-1.4718	1.7E-08	-30.2688
1531	1	Extremo 1A	-1.6E-07	44.876	1E-06	-1.4718	-4.9E-07	-51.6035
1531	0	Extremo 2A	-1.6E-07	36.048	1E-06	-1.4718	5.2E-07	-11.1412

1531	0.5	Extremo 2A	-1.6E-07	40.462	1E-06	-1.4718	1.7E-08	-30.2688
1531	1	Extremo 2A	-1.6E-07	44.876	1E-06	-1.4718	-4.9E-07	-51.6035
1533	0	Extremo 1A	-2.4E-07	-44.471	-1.4E-06	-0.3426	-7.2E-07	-51.4272
1533	0.5	Extremo 1A	-2.4E-07	-40.057	-1.4E-06	-0.3426	6.9E-09	-30.2951
1533	1	Extremo 1A	-2.4E-07	-35.643	-1.4E-06	-0.3426	7.3E-07	-11.3701
1533	0	Extremo 2A	-2.4E-07	-44.471	-1.4E-06	-0.3426	-7.2E-07	-51.4272
1533	0.5	Extremo 2A	-2.4E-07	-40.057	-1.4E-06	-0.3426	6.9E-09	-30.2951
1533	1	Extremo 2A	-2.4E-07	-35.643	-1.4E-06	-0.3426	7.3E-07	-11.3701
1534	0	Extremo 1A	-2.3E-08	-19.556	-3.9E-07	0.2835	-1.4E-07	-10.5927
1534	0.3	Extremo 1A	-2.3E-08	-17.47	-3.9E-07	0.2835	-2.3E-08	-5.0388
1534	0.6	Extremo 1A	-2.3E-08	-15.384	-3.9E-07	0.2835	9.4E-08	-0.1107
1534	0	Extremo 2A	-2.3E-08	-19.556	-3.9E-07	0.2835	-1.4E-07	-10.5927
1534	0.3	Extremo 2A	-2.3E-08	-17.47	-3.9E-07	0.2835	-2.3E-08	-5.0388
1534	0.6	Extremo 2A	-2.3E-08	-15.384	-3.9E-07	0.2835	9.4E-08	-0.1107
1535	0	Extremo 1A	-1.2E-08	15.224	2.1E-07	-0.4449	5.2E-08	-0.0727
1535	0.3	Extremo 1A	-1.2E-08	17.31	2.1E-07	-0.4449	-1.1E-08	-4.9528
1535	0.6	Extremo 1A	-1.2E-08	19.396	2.1E-07	-0.4449	-7.4E-08	-10.4587
1535	0	Extremo 2A	-1.2E-08	15.224	2.1E-07	-0.4449	5.2E-08	-0.0727
1535	0.3	Extremo 2A	-1.2E-08	17.31	2.1E-07	-0.4449	-1.1E-08	-4.9528
1535	0.6	Extremo 2A	-1.2E-08	19.396	2.1E-07	-0.4449	-7.4E-08	-10.4587
1536	0	Extremo 1A	-1.3E-07	35.331	8E-07	-0.6669	4.1E-07	-10.9253
1536	0.5	Extremo 1A	-1.3E-07	39.745	8E-07	-0.6669	1.3E-08	-29.6941
1536	1	Extremo 1A	-1.3E-07	44.159	8E-07	-0.6669	-3.9E-07	-50.67
1536	0	Extremo 2A	-1.3E-07	35.331	8E-07	-0.6669	4.1E-07	-10.9253
1536	0.5	Extremo 2A	-1.3E-07	39.745	8E-07	-0.6669	1.3E-08	-29.6941
1536	1	Extremo 2A	-1.3E-07	44.159	8E-07	-0.6669	-3.9E-07	-50.67
1538	0	Extremo 1A	-1.9E-07	-43.557	-1.1E-06	-1.1211	-5.6E-07	-49.9707
1538	0.5	Extremo 1A	-1.9E-07	-39.143	-1.1E-06	-1.1211	5.7E-09	-29.2955
1538	1	Extremo 1A	-1.9E-07	-34.729	-1.1E-06	-1.1211	5.7E-07	-10.8273
1538	0	Extremo 2A	-1.9E-07	-43.557	-1.1E-06	-1.1211	-5.6E-07	-49.9707
1538	0.5	Extremo 2A	-1.9E-07	-39.143	-1.1E-06	-1.1211	5.7E-09	-29.2955
1538	1	Extremo 2A	-1.9E-07	-34.729	-1.1E-06	-1.1211	5.7E-07	-10.8274
1539	0	Extremo 1A	-1.8E-08	-19.289	-3.1E-07	-0.0648	-1.1E-07	-10.3929
1539	0.3	Extremo 1A	-1.8E-08	-17.203	-3.1E-07	-0.0648	-1.8E-08	-4.919
1539	0.6	Extremo 1A	-1.8E-08	-15.117	-3.1E-07	-0.0648	7.3E-08	-0.0709
1539	0	Extremo 2A	-1.8E-08	-19.289	-3.1E-07	-0.0648	-1.1E-07	-10.3929
1539	0.3	Extremo 2A	-1.8E-08	-17.203	-3.1E-07	-0.0648	-1.8E-08	-4.919
1539	0.6	Extremo 2A	-1.8E-08	-15.117	-3.1E-07	-0.0648	7.3E-08	-0.0709
1540	0	Extremo 1A	-9.6E-09	15.135	1.7E-07	-0.2406	4.1E-08	-0.0484
1540	0.3	Extremo 1A	-9.6E-09	17.221	1.7E-07	-0.2406	-8.8E-09	-4.9017
1540	0.6	Extremo 1A	-9.6E-09	19.307	1.7E-07	-0.2406	-5.9E-08	-10.3809
1540	0	Extremo 2A	-9.6E-09	15.135	1.7E-07	-0.2406	4.1E-08	-0.0484
1540	0.3	Extremo 2A	-9.6E-09	17.221	1.7E-07	-0.2406	-8.8E-09	-4.9017
1540	0.6	Extremo 2A	-9.6E-09	19.307	1.7E-07	-0.2406	-5.9E-08	-10.3809
1541	0	Extremo 1A	-1E-07	35.161	6.4E-07	-0.2985	3.3E-07	-10.6733
1541	0.5	Extremo 1A	-1E-07	39.576	6.4E-07	-0.2985	1E-08	-29.3576
1541	1	Extremo 1A	-1E-07	43.99	6.4E-07	-0.2985	-3.1E-07	-50.2489
1541	0	Extremo 2A	-1E-07	35.161	6.4E-07	-0.2985	3.3E-07	-10.6733
1541	0.5	Extremo 2A	-1E-07	39.576	6.4E-07	-0.2985	1E-08	-29.3576
1541	1	Extremo 2A	-1E-07	43.99	6.4E-07	-0.2985	-3.1E-07	-50.2489
1543	0	Extremo 1A	-1.5E-07	-43.333	-8.8E-07	-1.1296	-4.4E-07	-49.2849
1543	0.5	Extremo 1A	-1.5E-07	-38.919	-8.8E-07	-1.1296	4.7E-09	-28.7219
1543	1	Extremo 1A	-1.5E-07	-34.505	-8.8E-07	-1.1296	4.4E-07	-10.3659
1543	0	Extremo 2A	-1.5E-07	-43.333	-8.8E-07	-1.1296	-4.4E-07	-49.2849
1543	0.5	Extremo 2A	-1.5E-07	-38.919	-8.8E-07	-1.1296	4.7E-09	-28.7219
1543	1	Extremo 2A	-1.5E-07	-34.505	-8.8E-07	-1.1296	4.4E-07	-10.3659
1544	0	Extremo 1A	-1.4E-08	-19.142	-2.4E-07	-0.1865	-8.6E-08	-10.2562
1544	0.3	Extremo 1A	-1.4E-08	-17.056	-2.4E-07	-0.1865	-1.4E-08	-4.8266
1544	0.6	Extremo 1A	-1.4E-08	-14.97	-2.4E-07	-0.1865	5.7E-08	-0.0227
1544	0	Extremo 2A	-1.4E-08	-19.142	-2.4E-07	-0.1865	-8.6E-08	-10.2562
1544	0.3	Extremo 2A	-1.4E-08	-17.056	-2.4E-07	-0.1865	-1.4E-08	-4.8266
1544	0.6	Extremo 2A	-1.4E-08	-14.97	-2.4E-07	-0.1865	5.7E-08	-0.0227
1545	0	Extremo 1A	-7.7E-09	15.097	1.3E-07	-0.1191	3.3E-08	-0.0319
1545	0.3	Extremo 1A	-7.7E-09	17.183	1.3E-07	-0.1191	-7E-09	-4.8739
1545	0.6	Extremo 1A	-7.7E-09	19.269	1.3E-07	-0.1191	-4.7E-08	-10.3417
1545	0	Extremo 2A	-7.7E-09	15.097	1.3E-07	-0.119	3.3E-08	-0.0319
1545	0.3	Extremo 2A	-7.7E-09	17.183	1.3E-07	-0.119	-7E-09	-4.8739
1545	0.6	Extremo 2A	-7.7E-09	19.269	1.3E-07	-0.119	-4.7E-08	-10.3417
1546	0	Extremo 1A	-8E-08	35.152	5E-07	-0.1369	2.6E-07	-10.5325
1546	0.5	Extremo 1A	-8E-08	39.567	5E-07	-0.1369	7.7E-09	-29.2122
1546	1	Extremo 1A	-8E-08	43.981	5E-07	-0.1369	-2.4E-07	-50.099
1546	0	Extremo 2A	-8E-08	35.152	5E-07	-0.1369	2.6E-07	-10.5325

1546	0.5	Extremo 2A	-8E-08	39.567	5E-07	-0.1369	7.7E-09	-29.2122
1546	1	Extremo 2A	-8E-08	43.981	5E-07	-0.1369	-2.4E-07	-50.099
1548	0	Extremo 1A	-1.1E-07	-43.294	-6.9E-07	-0.7686	-3.4E-07	-48.9976
1548	0.5	Extremo 1A	-1.1E-07	-38.88	-6.9E-07	-0.7686	3.9E-09	-28.454
1548	1	Extremo 1A	-1.1E-07	-34.466	-6.9E-07	-0.7686	3.5E-07	-10.1173
1548	0	Extremo 2A	-1.1E-07	-43.294	-6.9E-07	-0.7686	-3.4E-07	-48.9976
1548	0.5	Extremo 2A	-1.1E-07	-38.88	-6.9E-07	-0.7686	3.9E-09	-28.454
1548	1	Extremo 2A	-1.1E-07	-34.466	-6.9E-07	-0.7686	3.5E-07	-10.1173
1549	0	Extremo 1A	-1.1E-08	-19.074	-1.9E-07	-0.1582	-6.7E-08	-10.1861
1549	0.3	Extremo 1A	-1.1E-08	-16.988	-1.9E-07	-0.1582	-1.1E-08	-4.7769
1549	0.6	Extremo 1A	-1.1E-08	-14.902	-1.9E-07	-0.1582	4.5E-08	0.0066
1549	0	Extremo 2A	-1.1E-08	-19.074	-1.9E-07	-0.1582	-6.7E-08	-10.1861
1549	0.3	Extremo 2A	-1.1E-08	-16.988	-1.9E-07	-0.1582	-1.1E-08	-4.7769
1549	0.6	Extremo 2A	-1.1E-08	-14.902	-1.9E-07	-0.1582	4.5E-08	0.0066
1550	0	Extremo 1A	-6.1E-09	15.085	1.1E-07	-0.0362	2.6E-08	-0.0249
1550	0.3	Extremo 1A	-6.1E-09	17.171	1.1E-07	-0.0362	-5.6E-09	-4.8633
1550	0.6	Extremo 1A	-6.1E-09	19.257	1.1E-07	-0.0362	-3.7E-08	-10.3274
1550	0	Extremo 2A	-6.1E-09	15.085	1.1E-07	-0.0362	2.6E-08	-0.0249
1550	0.3	Extremo 2A	-6.1E-09	17.171	1.1E-07	-0.0362	-5.6E-09	-4.8633
1550	0.6	Extremo 2A	-6.1E-09	19.257	1.1E-07	-0.0362	-3.7E-08	-10.3274
1551	0	Extremo 1A	-6.3E-08	35.165	4E-07	-0.0409	2.1E-07	-10.4793
1551	0.5	Extremo 1A	-6.3E-08	39.579	4E-07	-0.0409	5.9E-09	-29.1652
1551	1	Extremo 1A	-6.3E-08	43.993	4E-07	-0.0409	-1.9E-07	-50.0582
1551	0	Extremo 2A	-6.3E-08	35.165	4E-07	-0.0409	2.1E-07	-10.4793
1551	0.5	Extremo 2A	-6.3E-08	39.579	4E-07	-0.0409	5.9E-09	-29.1652
1551	1	Extremo 2A	-6.3E-08	43.993	4E-07	-0.0409	-1.9E-07	-50.0582
1553	0	Extremo 1A	-8.9E-08	-43.29	-5.4E-07	-0.2683	-2.7E-07	-48.896
1553	0.5	Extremo 1A	-8.9E-08	-38.876	-5.4E-07	-0.2683	3.2E-09	-28.3545
1553	1	Extremo 1A	-8.9E-08	-34.462	-5.4E-07	-0.2683	2.7E-07	-10.0199
1553	0	Extremo 2A	-8.9E-08	-43.29	-5.4E-07	-0.2683	-2.7E-07	-48.896
1553	0.5	Extremo 2A	-8.9E-08	-38.876	-5.4E-07	-0.2683	3.2E-09	-28.3545
1553	1	Extremo 2A	-8.9E-08	-34.462	-5.4E-07	-0.2683	2.7E-07	-10.0199
1554	0	Extremo 1A	-8.6E-09	-19.049	-1.5E-07	-0.0594	-5.2E-08	-10.1588
1554	0.3	Extremo 1A	-8.6E-09	-16.963	-1.5E-07	-0.0594	-8.6E-09	-4.7571
1554	0.6	Extremo 1A	-8.6E-09	-14.877	-1.5E-07	-0.0594	3.5E-08	0.0189
1554	0	Extremo 2A	-8.6E-09	-19.049	-1.5E-07	-0.0594	-5.2E-08	-10.1588
1554	0.3	Extremo 2A	-8.6E-09	-16.963	-1.5E-07	-0.0594	-8.6E-09	-4.7571
1554	0.6	Extremo 2A	-8.6E-09	-14.877	-1.5E-07	-0.0594	3.5E-08	0.0189
1555	0	Extremo 1A	-4.8E-09	15.085	8.4E-08	0.0364	2.1E-08	-0.0249
1555	0.3	Extremo 1A	-4.8E-09	17.171	8.4E-08	0.0364	-4.5E-09	-4.8633
1555	0.6	Extremo 1A	-4.8E-09	19.257	8.4E-08	0.0364	-3E-08	-10.3274
1555	0	Extremo 2A	-4.8E-09	15.085	8.4E-08	0.0364	2.1E-08	-0.0249
1555	0.3	Extremo 2A	-4.8E-09	17.171	8.4E-08	0.0364	-4.5E-09	-4.8633
1555	0.6	Extremo 2A	-4.8E-09	19.257	8.4E-08	0.0364	-3E-08	-10.3274
1556	0	Extremo 1A	-5E-08	35.165	3.2E-07	0.0428	1.6E-07	-10.4792
1556	0.5	Extremo 1A	-5E-08	39.579	3.2E-07	0.0428	4.5E-09	-29.1652
1556	1	Extremo 1A	-5E-08	43.993	3.2E-07	0.0428	-1.5E-07	-50.0581
1556	0	Extremo 2A	-5E-08	35.165	3.2E-07	0.0428	1.6E-07	-10.4792
1556	0.5	Extremo 2A	-5E-08	39.579	3.2E-07	0.0428	4.5E-09	-29.1652
1556	1	Extremo 2A	-5E-08	43.993	3.2E-07	0.0428	-1.5E-07	-50.0581
1558	0	Extremo 1A	-7E-08	-43.29	-4.2E-07	0.2657	-2.1E-07	-48.896
1558	0.5	Extremo 1A	-7E-08	-38.876	-4.2E-07	0.2657	2.6E-09	-28.3544
1558	1	Extremo 1A	-7E-08	-34.462	-4.2E-07	0.2657	2.1E-07	-10.0198
1558	0	Extremo 2A	-7E-08	-43.29	-4.2E-07	0.2657	-2.1E-07	-48.896
1558	0.5	Extremo 2A	-7E-08	-38.876	-4.2E-07	0.2657	2.6E-09	-28.3544
1558	1	Extremo 2A	-7E-08	-34.462	-4.2E-07	0.2657	2.1E-07	-10.0198
1559	0	Extremo 1A	-6.7E-09	-19.049	-1.1E-07	0.0589	-4.1E-08	-10.1588
1559	0.3	Extremo 1A	-6.7E-09	-16.963	-1.1E-07	0.0589	-6.7E-09	-4.7571
1559	0.6	Extremo 1A	-6.7E-09	-14.877	-1.1E-07	0.0589	2.7E-08	0.0189
1559	0	Extremo 2A	-6.7E-09	-19.049	-1.1E-07	0.0589	-4.1E-08	-10.1588
1559	0.3	Extremo 2A	-6.7E-09	-16.963	-1.1E-07	0.0589	-6.7E-09	-4.7571
1559	0.6	Extremo 2A	-6.7E-09	-14.877	-1.1E-07	0.0589	2.7E-08	0.0189
1560	0	Extremo 1A	-3.8E-09	15.097	6.6E-08	0.1191	1.6E-08	-0.0318
1560	0.3	Extremo 1A	-3.8E-09	17.183	6.6E-08	0.1191	-3.5E-09	-4.8738
1560	0.6	Extremo 1A	-3.8E-09	19.269	6.6E-08	0.1191	-2.3E-08	-10.3416
1560	0	Extremo 2A	-3.8E-09	15.097	6.6E-08	0.1192	1.6E-08	-0.0318
1560	0.3	Extremo 2A	-3.8E-09	17.183	6.6E-08	0.1192	-3.5E-09	-4.8738
1560	0.6	Extremo 2A	-3.8E-09	19.269	6.6E-08	0.1192	-2.3E-08	-10.3416
1561	0	Extremo 1A	-4E-08	35.152	2.5E-07	0.1387	1.3E-07	-10.5322
1561	0.5	Extremo 1A	-4E-08	39.567	2.5E-07	0.1387	3.5E-09	-29.2119
1561	1	Extremo 1A	-4E-08	43.981	2.5E-07	0.1387	-1.2E-07	-50.0987
1561	0	Extremo 2A	-4E-08	35.152	2.5E-07	0.1387	1.3E-07	-10.5322
1561	0.5	Extremo 2A	-4E-08	39.567	2.5E-07	0.1387	3.5E-09	-29.2119
1561	1	Extremo 2A	-4E-08	43.981	2.5E-07	0.1387	-1.2E-07	-50.0987
1563	0	Extremo 1A	-5.4E-08	-43.294	-3.3E-07	0.766	-1.6E-07	-48.9975
1563	0.5	Extremo 1A	-5.4E-08	-38.88	-3.3E-07	0.766	2.1E-09	-28.4538
1563	1	Extremo 1A	-5.4E-08	-34.466	-3.3E-07	0.766	1.7E-07	-10.1171
1563	0	Extremo 2A	-5.4E-08	-43.294	-3.3E-07	0.7659	-1.6E-07	-48.9975
1563	0.5	Extremo 2A	-5.4E-08	-38.88	-3.3E-07	0.7659	2.1E-09	-28.4538
1563	1	Extremo 2A	-5.4E-08	-34.466	-3.3E-07	0.7659	1.7E-07	-10.1171
1564	0	Extremo 1A	-5.3E-09	-19.074	-8.9E-08	0.1577	-3.2E-08	-10.1861
1564	0.3	Extremo 1A	-5.3E-09	-16.988	-8.9E-08	0.1577	-5.2E-09	-4.7768
1564	0.6	Extremo 1A	-5.3E-09	-14.902	-8.9E-08	0.1577	2.1E-08	0.0067
1564	0	Extremo 2A	-5.3E-09	-19.074	-8.9E-08	0.1577	-3.2E-08	-10.1861
1564	0.3	Extremo 2A	-5.3E-09	-16.988	-8.9E-08	0.1577	-5.2E-09	-4.7768
1564	0.6	Extremo 2A	-5.3E-09	-14.902	-8.9E-08	0.1577	2.1E-08	0.0067
1565	0	Extremo 1A	-3E-09	15.135	5.2E-08	0.2404	1.3E-08	-0.0483
1565	0.3	Extremo 1A	-3E-09	17.221	5.2E-08	0.2404	-2.8E-09	-4.9016
1565	0.6	Extremo 1A	-3E-09	19.307	5.2E-08	0.2404	-1.9E-08	-10.3807
1565	0	Extremo 2A	-3E-09	15.135	5.2E-08	0.2404	1.3E-08	-0.0483
1565	0.3	Extremo 2A	-3E-09	17.221	5.2E-08	0.2404	-2.8E-09	-4.9016
1565	0.6	Extremo 2A	-3E-09	19.307	5.2E-08	0.2404	-1.9E-08	-10.3807
1566	0	Extremo 1A	-3.1E-08	35.161	2E-07	0.3	1E-07	-10.6725
1566	0.5	Extremo 1A	-3.1E-08	39.575	2E-07	0.3	2.7E-09	-29.3568
1566	1	Extremo 1A	-3.1E-08	43.99	2E-07	0.3	-9.6E-08	-50.248
1566	0	Extremo 2A	-3.1E-08	35.161	2E-07	0.3	1E-07	-10.6725
1566	0.5	Extremo 2A	-3.1E-08	39.575	2E-07	0.3	2.7E-09	-29.3568
1566	1	Extremo 2A	-3.1E-08	43.99	2E-07	0.3	-9.6E-08	-50.248
1568	0	Extremo 1A	-4.2E-08	-43.333	-2.6E-07	1.1272	-1.3E-07	-49.2844
1568	0.5	Extremo 1A	-4.2E-08	-38.919	-2.6E-07	1.1272	1.7E-09	-28.7213
1568	1	Extremo 1A	-4.2E-08	-34.505	-2.6E-07	1.1272	1.3E-07	-10.3653
1568	0	Extremo 2A	-4.2E-08	-43.333	-2.6E-07	1.1272	-1.3E-07	-49.2844
1568	0.5	Extremo 2A	-4.2E-08	-38.919	-2.6E-07	1.1272	1.7E-09	-28.7213
1568	1	Extremo 2A	-4.2E-08	-34.505	-2.6E-07	1.1272	1.3E-07	-10.3653
1569	0	Extremo 1A	-4.1E-09	-19.142	-6.9E-08	0.1862	-2.5E-08	-10.256
1569	0.3	Extremo 1A	-4.1E-09	-17.056	-6.9E-08	0.1862	-4.1E-09	-4.8264
1569	0.6	Extremo 1A	-4.1E-09	-14.97	-6.9E-08	0.1862	1.7E-08	-0.0226
1569	0	Extremo 2A	-4.1E-09	-19.142	-6.9E-08	0.1862	-2.5E-08	-10.256
1569	0.3	Extremo 2A	-4.1E-09	-17.056	-6.9E-08	0.1862	-4.1E-09	-4.8264
1569	0.6	Extremo 2A	-4.1E-09	-14.97	-6.9E-08	0.1862	1.7E-08	-0.0226
1570	0	Extremo 1A	-2.4E-09	15.223	4.1E-08	0.4443	1E-08	-0.0726
1570	0.3	Extremo 1A	-2.4E-09	17.309	4.1E-08	0.4443	-2.2E-09	-4.9525
1570	0.6	Extremo 1A	-2.4E-09	19.395	4.1E-08	0.4443	-1.5E-08	-10.4582
1570	0	Extremo 2A	-2.4E-09	15.223	4.1E-08	0.4443	1E-08	-0.0726
1570	0.3	Extremo 2A	-2.4E-09	17.309	4.1E-08	0.4443	-2.2E-09	-4.9525
1570	0.6	Extremo 2A	-2.4E-09	19.395	4.1E-08	0.4443	-1.5E-08	-10.4582
1571	0	Extremo 1A	-2.5E-08	35.33	1.6E-07	0.6674	8E-08	-10.9237
1571	0.5	Extremo 1A	-2.5E-08	39.744	1.6E-07	0.6674	2E-09	-29.6923
1571	1	Extremo 1A	-2.5E-08	44.158	1.6E-07	0.6674	-7.6E-08	-50.6678
1571	0	Extremo 2A	-2.5E-08	35.33	1.6E-07	0.6674	8E-08	-10.9237
1571	0.5	Extremo 2A	-2.5E-08	39.744	1.6E-07	0.6674	2E-09	-29.6922
1571	1	Extremo 2A	-2.5E-08	44.158	1.6E-07	0.6674	-7.6E-08	-50.6678
1573	0	Extremo 1A	-3.3E-08	-43.557	-2E-07	1.1195	-9.9E-08	-49.9691
1573	0.5	Extremo 1A	-3.3E-08	-39.143	-2E-07	1.1195	1.4E-09	-29.294
1573	1	Extremo 1A	-3.3E-08	-34.729	-2E-07	1.1195	1E-07	-10.8259
1573	0	Extremo 2A	-3.3E-08	-43.557	-2E-07	1.1194	-9.9E-08	-49.969
1573	0.5	Extremo 2A	-3.3E-08	-39.143	-2E-07	1.1194	1.4E-09	-29.2939
1573	1	Extremo 2A	-3.3E-08	-34.729	-2E-07	1.1194	1E-07	-10.8259
1574	0	Extremo 1A	-3.2E-09	-19.289	-5.4E-08	0.0649	-1.9E-08	-10.3925
1574	0.3	Extremo 1A	-3.2E-09	-17.203	-5.4E-08	0.0649	-3.2E-09	-4.9187
1574	0.6	Extremo 1A	-3.2E-09	-15.117	-5.4E-08	0.0649	1.3E-08	-0.0708
1574	0	Extremo 2A	-3.2E-09	-19.289	-5.4E-08	0.0649	-1.9E-08	-10.3925
1574	0.3	Extremo 2A	-3.2E-09	-17.203	-5.4E-08	0.0649	-3.2E-09	-4.9187
1574	0.6	Extremo 2A	-3.2E-09	-15.117	-5.4E-08	0.0649	1.3E-08	-0.0708
1575	0	Extremo 1A	-1.9E-09	15.382	3.3E-08	0.756	8.1E-09	-0.0794
1575	0.3	Extremo 1A	-1.9E-09	17.468	3.3E-08	0.756	-1.8E-09	-5.0069
1575	0.6	Extremo 1A	-1.9E-09	19.554	3.3E-08	0.756	-1.2E-08	-10.5601
1575	0	Extremo 2A	-1.9E-09	15.382	3.3E-08	0.756	8E-09	-0.0794
1575	0.3	Extremo 2A	-1.9E-09	17.468	3.3E-08	0.756	-1.8E-09	-5.0069
1575	0.6	Extremo 2A	-1.9E-09	19.554	3.3E-08	0.756	-1.2E-08	-10.5601
1576	0	Extremo 1A	-2E-08	36.046	1.2E-07	1.47	6.3E-08	-11.139
1576	0.5	Extremo 1A	-2E-08	40.46	1.2E-07	1.47	1.6E-09	-30.2653
1576	1	Extremo 1A	-2E-08	44.874	1.2E-07	1.47	-6E-08	-51.5987
1576	0	Extremo 2A	-2E-08	36.046	1.2E-07	1.47	6.3E-08	-11.139

1576	0.5	Extremo 2A	-2E-08	40.46	1.2E-07	1.47	1.6E-09	-30.2653
1576	1	Extremo 2A	-2E-08	44.874	1.2E-07	1.47	-6E-08	-51.5986
1578	0	Extremo 1A	-2.6E-08	-44.469	-1.6E-07	0.343	-7.7E-08	-51.4228
1578	0.5	Extremo 1A	-2.6E-08	-40.055	-1.6E-07	0.343	1.1E-09	-30.2917
1578	1	Extremo 1A	-2.6E-08	-35.641	-1.6E-07	0.343	8E-08	-11.3677
1578	0	Extremo 2A	-2.6E-08	-44.469	-1.6E-07	0.343	-7.7E-08	-51.4228
1578	0.5	Extremo 2A	-2.6E-08	-40.055	-1.6E-07	0.343	1.1E-09	-30.2917
1578	1	Extremo 2A	-2.6E-08	-35.641	-1.6E-07	0.343	8E-08	-11.3676
1579	0	Extremo 1A	-2.5E-09	-19.555	-4.2E-08	-0.2825	-1.5E-08	-10.592
1579	0.3	Extremo 1A	-2.5E-09	-17.469	-4.2E-08	-0.2825	-2.5E-09	-5.0383
1579	0.6	Extremo 1A	-2.5E-09	-15.383	-4.2E-08	-0.2825	1E-08	-0.1105
1579	0	Extremo 2A	-2.5E-09	-19.555	-4.2E-08	-0.2825	-1.5E-08	-10.592
1579	0.3	Extremo 2A	-2.5E-09	-17.469	-4.2E-08	-0.2825	-2.5E-09	-5.0383
1579	0.6	Extremo 2A	-2.5E-09	-15.383	-4.2E-08	-0.2825	1E-08	-0.1105
1580	0	Extremo 1A	-1.5E-09	15.548	2.6E-08	1.0487	6.4E-09	-0.0074
1580	0.3	Extremo 1A	-1.5E-09	17.633	2.6E-08	1.0487	-1.4E-09	-4.9846
1580	0.6	Extremo 1A	-1.5E-09	19.719	2.6E-08	1.0487	-9.2E-09	-10.5875
1580	0	Extremo 2A	-1.5E-09	15.548	2.6E-08	1.0487	6.3E-09	-0.0074
1580	0.3	Extremo 2A	-1.5E-09	17.633	2.6E-08	1.0487	-1.4E-09	-4.9846
1580	0.6	Extremo 2A	-1.5E-09	19.719	2.6E-08	1.0487	-9.2E-09	-10.5875
1581	0	Extremo 1A	-1.6E-08	37.859	9.8E-08	2.6897	5E-08	-10.7701
1581	0.5	Extremo 1A	-1.6E-08	42.273	9.8E-08	2.6897	1.2E-09	-30.8032
1581	1	Extremo 1A	-1.6E-08	46.687	9.8E-08	2.6897	-4.8E-08	-53.0434
1581	0	Extremo 2A	-1.6E-08	37.859	9.7E-08	2.6896	5E-08	-10.7701
1581	0.5	Extremo 2A	-1.6E-08	42.273	9.7E-08	2.6896	1.2E-09	-30.8032
1581	1	Extremo 2A	-1.6E-08	46.687	9.7E-08	2.6896	-4.8E-08	-53.0433
1583	0	Extremo 1A	-2E-08	-46.977	-1.2E-07	-1.4055	-6E-08	-53.8506
1583	0.5	Extremo 1A	-2E-08	-42.563	-1.2E-07	-1.4055	9E-10	-31.4657
1583	1	Extremo 1A	-2E-08	-38.149	-1.2E-07	-1.4055	6.2E-08	-11.2879
1583	0	Extremo 2A	-2E-08	-46.977	-1.2E-07	-1.4055	-6E-08	-53.8505
1583	0.5	Extremo 2A	-2E-08	-42.563	-1.2E-07	-1.4055	9E-10	-31.4657
1583	1	Extremo 2A	-2E-08	-38.149	-1.2E-07	-1.4055	6.2E-08	-11.2878
1584	0	Extremo 1A	-2E-09	-19.888	-3.3E-08	-0.756	-1.2E-08	-10.7393
1584	0.3	Extremo 1A	-2E-09	-17.803	-3.3E-08	-0.756	-1.9E-09	-5.0856
1584	0.6	Extremo 1A	-2E-09	-15.717	-3.3E-08	-0.756	8E-09	-0.0578
1584	0	Extremo 2A	-2E-09	-19.888	-3.3E-08	-0.756	-1.2E-08	-10.7393
1584	0.3	Extremo 2A	-2E-09	-17.802	-3.3E-08	-0.756	-1.9E-09	-5.0856
1584	0.6	Extremo 2A	-2E-09	-15.717	-3.3E-08	-0.756	8E-09	-0.0578
1585	0	Extremo 1A	-1.2E-09	15.501	2E-08	0.8963	5E-09	0.1566
1585	0.3	Extremo 1A	-1.2E-09	17.587	2E-08	0.8963	-1.1E-09	-4.8067
1585	0.6	Extremo 1A	-1.2E-09	19.673	2E-08	0.8963	-7.3E-09	-10.3958
1585	0	Extremo 2A	-1.2E-09	15.501	2E-08	0.8962	5E-09	0.1566
1585	0.3	Extremo 2A	-1.2E-09	17.587	2E-08	0.8962	-1.1E-09	-4.8067
1585	0.6	Extremo 2A	-1.2E-09	19.673	2E-08	0.8962	-7.2E-09	-10.3958
1586	0	Extremo 1A	-1.2E-08	40.043	7.7E-08	3.0345	3.9E-08	-9.3406
1586	0.5	Extremo 1A	-1.2E-08	44.457	7.7E-08	3.0345	9.3E-10	-30.4657
1586	1	Extremo 1A	-1.2E-08	48.871	7.7E-08	3.0345	-3.8E-08	-53.7978
1586	0	Extremo 2A	-1.2E-08	40.043	7.7E-08	3.0345	3.9E-08	-9.3406
1586	0.5	Extremo 2A	-1.2E-08	44.457	7.7E-08	3.0345	9.3E-10	-30.4656
1586	1	Extremo 2A	-1.2E-08	48.871	7.7E-08	3.0345	-3.7E-08	-53.7977
1588	0	Extremo 1A	-1.6E-08	-50.546	-9.6E-08	-2.6929	-4.7E-08	-55.8867
1588	0.5	Extremo 1A	-1.6E-08	-46.132	-9.6E-08	-2.6929	7.2E-10	-31.7171
1588	1	Extremo 1A	-1.6E-08	-41.718	-9.6E-08	-2.6929	4.9E-08	-9.7545
1588	0	Extremo 2A	-1.6E-08	-50.546	-9.6E-08	-2.6928	-4.7E-08	-55.8866
1588	0.5	Extremo 2A	-1.6E-08	-46.132	-9.6E-08	-2.6928	7.2E-10	-31.717
1588	1	Extremo 2A	-1.6E-08	-41.718	-9.6E-08	-2.6928	4.9E-08	-9.7545
1589	0	Extremo 1A	-1.5E-09	-19.999	-2.6E-08	-0.8252	-9.3E-09	-10.6165
1589	0.3	Extremo 1A	-1.5E-09	-17.913	-2.6E-08	-0.8252	-1.5E-09	-4.9299
1589	0.6	Extremo 1A	-1.5E-09	-15.827	-2.6E-08	-0.8252	6.3E-09	0.131
1589	0	Extremo 2A	-1.5E-09	-19.999	-2.6E-08	-0.8252	-9.3E-09	-10.6165
1589	0.3	Extremo 2A	-1.5E-09	-17.913	-2.6E-08	-0.8252	-1.5E-09	-4.9299
1589	0.6	Extremo 2A	-1.5E-09	-15.827	-2.6E-08	-0.8252	6.3E-09	0.131
1590	0	Extremo 1A	-9.4E-10	15.275	1.6E-08	1.8E-05	4E-09	0.2157
1590	0.3	Extremo 1A	-9.4E-10	17.361	1.6E-08	1.8E-05	-8.8E-10	-4.6798
1590	0.6	Extremo 1A	-9.4E-10	19.447	1.6E-08	1.8E-05	-5.7E-09	-10.201
1590	0	Extremo 2A	-9.5E-10	15.275	1.6E-08	1.7E-05	3.9E-09	0.2157
1590	0.3	Extremo 2A	-9.5E-10	17.361	1.6E-08	1.7E-05	-8.8E-10	-4.6798
1590	0.6	Extremo 2A	-9.5E-10	19.447	1.6E-08	1.7E-05	-5.7E-09	-10.201
1591	0	Extremo 1A	-9.8E-09	38.959	6.1E-08	0.00032	3.1E-08	-8.5888
1591	0.5	Extremo 1A	-9.8E-09	43.373	6.1E-08	0.00032	7.2E-10	-29.172
1591	1	Extremo 1A	-9.8E-09	47.788	6.1E-08	0.00032	-3E-08	-51.9623
1591	0	Extremo 2A	-9.8E-09	38.959	6.1E-08	0.0003	3.1E-08	-8.5889
1591	0.5	Extremo 2A	-9.8E-09	43.373	6.1E-08	0.0003	7.2E-10	-29.172
1591	1	Extremo 2A	-9.8E-09	47.788	6.1E-08	0.0003	-3E-08	-51.9622
1593	0	Extremo 1A	-1.2E-08	-49.96	-7.5E-08	-0.00046	-3.7E-08	-54.3722
1593	0.5	Extremo 1A	-1.2E-08	-45.546	-7.5E-08	-0.00046	5.8E-10	-30.4959
1593	1	Extremo 1A	-1.2E-08	-41.131	-7.5E-08	-0.00046	3.8E-08	-8.8267
1593	0	Extremo 2A	-1.2E-08	-49.959	-7.5E-08	-0.00044	-3.7E-08	-54.3721
1593	0.5	Extremo 2A	-1.2E-08	-45.545	-7.5E-08	-0.00044	5.8E-10	-30.4959
1593	1	Extremo 2A	-1.2E-08	-41.131	-7.5E-08	-0.00044	3.8E-08	-8.8267
1594	0	Extremo 1A	-1.2E-09	-19.805	-2E-08	-8.6E-05	-7.3E-09	-10.4211
1594	0.3	Extremo 1A	-1.2E-09	-17.719	-2E-08	-8.6E-05	-1.2E-09	-4.7926
1594	0.6	Extremo 1A	-1.2E-09	-15.633	-2E-08	-8.6E-05	4.9E-09	0.2102
1594	0	Extremo 2A	-1.2E-09	-19.805	-2E-08	-8.2E-05	-7.2E-09	-10.4211
1594	0.3	Extremo 2A	-1.2E-09	-17.719	-2E-08	-8.2E-05	-1.2E-09	-4.7926
1594	0.6	Extremo 2A	-1.2E-09	-15.633	-2E-08	-8.2E-05	4.9E-09	0.2102
1595	0	Extremo 1A	-7.4E-10	15.501	1.3E-08	-0.8962	3.1E-09	0.1566
1595	0.3	Extremo 1A	-7.4E-10	17.587	1.3E-08	-0.8962	-7E-10	-4.8067
1595	0.6	Extremo 1A	-7.4E-10	19.673	1.3E-08	-0.8962	-4.5E-09	-10.3958
1595	0	Extremo 2A	-7.5E-10	15.501	1.3E-08	-0.8962	3.1E-09	0.1566
1595	0.3	Extremo 2A	-7.5E-10	17.587	1.3E-08	-0.8962	-7E-10	-4.8067
1595	0.6	Extremo 2A	-7.5E-10	19.673	1.3E-08	-0.8962	-4.5E-09	-10.3958
1596	0	Extremo 1A	-7.7E-09	40.043	4.8E-08	-3.0339	2.5E-08	-9.3406
1596	0.5	Extremo 1A	-7.7E-09	44.457	4.8E-08	-3.0339	5.5E-10	-30.4657
1596	1	Extremo 1A	-7.7E-09	48.871	4.8E-08	-3.0339	-2.3E-08	-53.7978
1596	0	Extremo 2A	-7.7E-09	40.043	4.8E-08	-3.0339	2.4E-08	-9.3406
1596	0.5	Extremo 2A	-7.7E-09	44.457	4.8E-08	-3.0339	5.5E-10	-30.4656
1596	1	Extremo 2A	-7.7E-09	48.871	4.8E-08	-3.0339	-2.3E-08	-53.7977
1598	0	Extremo 1A	-9.7E-09	-50.546	-5.9E-08	2.692	-2.9E-08	-55.8867
1598	0.5	Extremo 1A	-9.7E-09	-46.132	-5.9E-08	2.692	4.7E-10	-31.7171
1598	1	Extremo 1A	-9.7E-09	-41.718	-5.9E-08	2.692	3E-08	-9.7545
1598	0	Extremo 2A	-9.8E-09	-50.546	-5.9E-08	2.6919	-2.9E-08	-55.8866
1598	0.5	Extremo 2A	-9.8E-09	-46.132	-5.9E-08	2.6919	4.6E-10	-31.717
1598	1	Extremo 2A	-9.8E-09	-41.718	-5.9E-08	2.6919	3E-08	-9.7545
1599	0	Extremo 1A	-9.4E-10	-19.999	-1.6E-08	0.825	-5.7E-09	-10.6165
1599	0.3	Extremo 1A	-9.4E-10	-17.913	-1.6E-08	0.825	-9.2E-10	-4.9299
1599	0.6	Extremo 1A	-9.4E-10	-15.827	-1.6E-08	0.825	3.8E-09	0.131
1599	0	Extremo 2A	-9.5E-10	-19.999	-1.6E-08	0.825	-5.7E-09	-10.6165
1599	0.3	Extremo 2A	-9.5E-10	-17.913	-1.6E-08	0.825	-9.2E-10	-4.9299
1599	0.6	Extremo 2A	-9.5E-10	-15.827	-1.6E-08	0.825	3.8E-09	0.131
1600	0	Extremo 1A	-5.9E-10	15.548	1E-08	-1.0487	2.5E-09	-0.0074
1600	0.3	Extremo 1A	-5.9E-10	17.633	1E-08	-1.0487	-5.5E-10	-4.9846
1600	0.6	Extremo 1A	-5.9E-10	19.719	1E-08	-1.0487	-3.6E-09	-10.5875
1600	0	Extremo 2A	-5.9E-10	15.548	9.9E-09	-1.0487	2.4E-09	-0.0074
1600	0.3	Extremo 2A	-5.9E-10	17.633	9.9E-09	-1.0487	-5.5E-10	-4.9846
1600	0.6	Extremo 2A	-5.9E-10	19.719	9.9E-09	-1.0487	-3.5E-09	-10.5875
1601	0	Extremo 1A	-6.1E-09	37.859	3.8E-08	-2.6891	1.9E-08	-10.7701
1601	0.5	Extremo 1A	-6.1E-09	42.273	3.8E-08	-2.6891	4.2E-10	-30.8033
1601	1	Extremo 1A	-6.1E-09	46.687	3.8E-08	-2.6891	-1.8E-08	-53.0434
1601	0	Extremo 2A	-6.1E-09	37.859	3.7E-08	-2.689	1.9E-08	-10.7701
1601	0.5	Extremo 2A	-6.1E-09	42.273	3.7E-08	-2.689	4.2E-10	-30.8032
1601	1	Extremo 2A	-6.1E-09	46.687	3.7E-08	-2.689	-1.8E-08	-53.0433
1603	0	Extremo 1A	-7.6E-09	-46.977	-4.6E-08	1.4046	-2.3E-08	-53.8506
1603	0.5	Extremo 1A	-7.6E-09	-42.563	-4.6E-08	1.4046	3.8E-10	-31.4657
1603	1	Extremo 1A	-7.6E-09	-38.149	-4.6E-08	1.4046	2.3E-08	-11.2879
1603	0	Extremo 2A	-7.7E-09	-46.977	-4.6E-08	1.4046	-2.3E-08	-53.8505
1603	0.5	Extremo 2A	-7.7E-09	-42.563	-4.6E-08	1.4046	3.7E-10	-31.4657
1603	1	Extremo 2A	-7.7E-09	-38.149	-4.6E-08	1.4046	2.3E-08	-11.2878
1604	0	Extremo 1A	-7.4E-10	-19.888	-1.2E-08	0.7558	-4.4E-09	-10.7393
1604	0.3	Extremo 1A	-7.4E-10	-17.803	-1.2E-08	0.7558	-7.2E-10	-5.0856
1604	0.6	Extremo 1A	-7.4E-10	-15.717	-1.2E-08	0.7558	3E-09	-0.0578
1604	0	Extremo 2A	-7.4E-10	-19.888	-1.2E-08	0.7558	-4.4E-09	-10.7393
1604	0.3	Extremo 2A	-7.4E-10	-17.803	-1.2E-08	0.7558	-7.1E-10	-5.0856
1604	0.6	Extremo 2A	-7.4E-10	-15.717	-1.2E-08	0.7558	3E-09	-0.0578
1605	0	Extremo 1A	-4.6E-10	15.382	7.9E-09	-0.756	1.9E-09	-0.0794
1605	0.3	Extremo 1A	-4.6E-10	17.468	7.9E-09	-0.756	-4.4E-10	-5.0069
1605	0.6	Extremo 1A	-4.6E-10	19.554	7.9E-09	-0.756	-2.8E-09	-10.5601
1605	0	Extremo 2A	-4.7E-10	15.382	7.8E-09	-0.756	1.9E-09	-0.0794
1605	0.3	Extremo 2A	-4.7E-10	17.468	7.8E-09	-0.756	-4.3E-10	-5.0069
1605	0.6	Extremo 2A	-4.7E-10	19.554	7.8E-09	-0.756	-2.8E-09	-10.5601
1606	0	Extremo 1A	-4.8E-09	36.046	3E-08	-1.4694	1.5E-08	-11.139
1606	0.5	Extremo 1A	-4.8E-09	40.46	3E-08	-1.4694	3.3E-10	-30.2653
1606	1	Extremo 1A	-4.8E-09	44.874	3E-08	-1.4694	-1.5E-08	-51.5987
1606	0	Extremo 2A	-4.9E-09	36.046	2.9E-08	-1.4694	1.5E-08	-11.139

1606	0.5	Extremo 2A	-4.9E-09	40.46	2.9E-08	-1.4694	3.2E-10	-30.2653
1606	1	Extremo 2A	-4.9E-09	44.874	2.9E-08	-1.4694	-1.4E-08	-51.5986
1608	0	Extremo 1A	-6E-09	-44.469	-3.6E-08	-0.344	-1.8E-08	-51.4229
1608	0.5	Extremo 1A	-6E-09	-40.055	-3.6E-08	-0.344	3E-10	-30.2917
1608	1	Extremo 1A	-6E-09	-35.641	-3.6E-08	-0.344	1.8E-08	-11.3677
1608	0	Extremo 2A	-6E-09	-44.469	-3.6E-08	-0.3439	-1.8E-08	-51.4228
1608	0.5	Extremo 2A	-6E-09	-40.055	-3.6E-08	-0.3439	3E-10	-30.2917
1608	1	Extremo 2A	-6E-09	-35.641	-3.6E-08	-0.3439	1.8E-08	-11.3676
1609	0	Extremo 1A	-5.8E-10	-19.555	-9.7E-09	0.2824	-3.5E-09	-10.592
1609	0.3	Extremo 1A	-5.8E-10	-17.469	-9.7E-09	0.2824	-5.6E-10	-5.0383
1609	0.6	Extremo 1A	-5.8E-10	-15.383	-9.7E-09	0.2824	2.4E-09	-0.1105
1609	0	Extremo 2A	-5.8E-10	-19.555	-9.6E-09	0.2824	-3.4E-09	-10.592
1609	0.3	Extremo 2A	-5.8E-10	-17.469	-9.6E-09	0.2824	-5.5E-10	-5.0383
1609	0.6	Extremo 2A	-5.8E-10	-15.383	-9.6E-09	0.2824	2.3E-09	-0.1105
1610	0	Extremo 1A	-3.7E-10	15.223	6.2E-09	-0.4443	1.5E-09	-0.0726
1610	0.3	Extremo 1A	-3.7E-10	17.309	6.2E-09	-0.4443	-3.4E-10	-4.9525
1610	0.6	Extremo 1A	-3.7E-10	19.395	6.2E-09	-0.4443	-2.2E-09	-10.4582
1610	0	Extremo 2A	-3.8E-10	15.223	6.1E-09	-0.4443	1.5E-09	-0.0726
1610	0.3	Extremo 2A	-3.8E-10	17.309	6.1E-09	-0.4443	-3.4E-10	-4.9525
1610	0.6	Extremo 2A	-3.8E-10	19.395	6.1E-09	-0.4443	-2.2E-09	-10.4582
1611	0	Extremo 1A	-3.8E-09	35.33	2.3E-08	-0.6668	1.2E-08	-10.9238
1611	0.5	Extremo 1A	-3.8E-09	39.744	2.3E-08	-0.6668	2.5E-10	-29.6923
1611	1	Extremo 1A	-3.8E-09	44.158	2.3E-08	-0.6668	-1.1E-08	-50.6679
1611	0	Extremo 2A	-3.9E-09	35.33	2.3E-08	-0.6668	1.2E-08	-10.9237
1611	0.5	Extremo 2A	-3.9E-09	39.744	2.3E-08	-0.6668	2.5E-10	-29.6923
1611	1	Extremo 2A	-3.9E-09	44.158	2.3E-08	-0.6668	-1.1E-08	-50.6678
1613	0	Extremo 1A	-4.7E-09	-43.557	-2.8E-08	-1.1204	-1.4E-08	-49.9691
1613	0.5	Extremo 1A	-4.7E-09	-39.143	-2.8E-08	-1.1204	2.4E-10	-29.294
1613	1	Extremo 1A	-4.7E-09	-34.729	-2.8E-08	-1.1204	1.4E-08	-10.8259
1613	0	Extremo 2A	-4.8E-09	-43.557	-2.8E-08	-1.1203	-1.4E-08	-49.9691
1613	0.5	Extremo 2A	-4.8E-09	-39.143	-2.8E-08	-1.1203	2.4E-10	-29.294
1613	1	Extremo 2A	-4.8E-09	-34.729	-2.8E-08	-1.1203	1.4E-08	-10.8259
1614	0	Extremo 1A	-4.5E-10	-19.289	-7.6E-09	-0.0651	-2.7E-09	-10.3925
1614	0.3	Extremo 1A	-4.5E-10	-17.203	-7.6E-09	-0.0651	-4.4E-10	-4.9187
1614	0.6	Extremo 1A	-4.5E-10	-15.117	-7.6E-09	-0.0651	1.8E-09	-0.0708
1614	0	Extremo 2A	-4.6E-10	-19.289	-7.5E-09	-0.0651	-2.7E-09	-10.3925
1614	0.3	Extremo 2A	-4.6E-10	-17.203	-7.5E-09	-0.0651	-4.3E-10	-4.9187
1614	0.6	Extremo 2A	-4.6E-10	-15.117	-7.5E-09	-0.0651	1.8E-09	-0.0708
1615	0	Extremo 1A	-2.9E-10	15.135	4.9E-09	-0.2404	1.2E-09	-0.0483
1615	0.3	Extremo 1A	-2.9E-10	17.221	4.9E-09	-0.2404	-2.7E-10	-4.9016
1615	0.6	Extremo 1A	-2.9E-10	19.307	4.9E-09	-0.2404	-1.7E-09	-10.3807
1615	0	Extremo 2A	-3E-10	15.135	4.7E-09	-0.2404	1.2E-09	-0.0483
1615	0.3	Extremo 2A	-3E-10	17.221	4.7E-09	-0.2404	-2.6E-10	-4.9016
1615	0.6	Extremo 2A	-3E-10	19.307	4.7E-09	-0.2404	-1.7E-09	-10.3807
1616	0	Extremo 1A	-3F-09	35.161	1.8E-08	-0.2993	9.4E-09	-10.6726
1616	0.5	Extremo 1A	-3F-09	39.576	1.8E-08	-0.2993	1.9E-10	-29.3568
1616	1	Extremo 1A	-3E-09	43.99	1.8E-08	-0.2993	-9E-09	-50.2481
1616	0	Extremo 2A	-3.1E-09	35.161	1.8E-08	-0.2994	9E-09	-10.6726
1616	0.5	Extremo 2A	-3.1E-09	39.576	1.8E-08	-0.2994	1.8E-10	-29.3568
1616	1	Extremo 2A	-3.1E-09	43.99	1.8E-08	-0.2994	-8.7E-09	-50.2481
1618	0	Extremo 1A	-3.7E-09	-43.333	-2.2E-08	-1.1282	-1.1E-08	-49.2844
1618	0.5	Extremo 1A	-3.7E-09	-38.919	-2.2E-08	-1.1282	1.9E-10	-28.7213
1618	1	Extremo 1A	-3.7E-09	-34.505	-2.2E-08	-1.1282	1.1E-08	-10.3653
1618	0	Extremo 2A	-3.8E-09	-43.333	-2.1E-08	-1.1281	-1.1E-08	-49.2844
1618	0.5	Extremo 2A	-3.8E-09	-38.919	-2.1E-08	-1.1281	1.9E-10	-28.7213
1618	1	Extremo 2A	-3.8E-09	-34.505	-2.1E-08	-1.1281	1.1E-08	-10.3653
1619	0	Extremo 1A	-3.6E-10	-19.142	-6E-09	-0.1864	-2.1E-09	-10.256
1619	0.3	Extremo 1A	-3.6E-10	-17.056	-6E-09	-0.1864	-3.4E-10	-4.8264
1619	0.6	Extremo 1A	-3.6E-10	-14.97	-6E-09	-0.1864	1.4E-09	-0.0226
1619	0	Extremo 2A	-3.7E-10	-19.142	-5.8E-09	-0.1864	-2.1E-09	-10.256
1619	0.3	Extremo 2A	-3.7E-10	-17.056	-5.8E-09	-0.1864	-3.3E-10	-4.8264
1619	0.6	Extremo 2A	-3.7E-10	-14.97	-5.8E-09	-0.1864	1.4E-09	-0.0226
1620	0	Extremo 1A	-2.3E-10	15.097	3.8E-09	-0.1191	9.4E-10	-0.0318
1620	0.3	Extremo 1A	-2.3E-10	17.183	3.8E-09	-0.1191	-2.1E-10	-4.8738
1620	0.6	Extremo 1A	-2.3E-10	19.269	3.8E-09	-0.1191	-1.4E-09	-10.3416
1620	0	Extremo 2A	-2.4E-10	15.097	3.6E-09	-0.1191	8.8E-10	-0.0318
1620	0.3	Extremo 2A	-2.4E-10	17.183	3.6E-09	-0.1191	-2E-10	-4.8738
1620	0.6	Extremo 2A	-2.4E-10	19.269	3.6E-09	-0.1191	-1.3E-09	-10.3416
1621	0	Extremo 1A	-2.4E-09	35.153	1.4E-08	-0.138	7.3E-09	-10.5322
1621	0.5	Extremo 1A	-2.4E-09	39.567	1.4E-08	-0.138	1.5E-10	-29.212
1621	1	Extremo 1A	-2.4E-09	43.981	1.4E-08	-0.138	-7E-09	-50.0988
1621	0	Extremo 2A	-2.5E-09	35.153	1.4E-08	-0.138	6.9E-09	-10.5322
1621	0.5	Extremo 2A	-2.5E-09	39.567	1.4E-08	-0.138	1.4E-10	-29.212
1621	1	Extremo 2A	-2.5E-09	43.981	1.4E-08	-0.138	-6.6E-09	-50.0988
1623	0	Extremo 1A	-2.9E-09	-43.295	-1.7E-08	-0.767	-8.5E-09	-48.9976
1623	0.5	Extremo 1A	-2.9E-09	-38.88	-1.7E-08	-0.767	1.6E-10	-28.4538
1623	1	Extremo 1A	-2.9E-09	-34.466	-1.7E-08	-0.767	8.8E-09	-10.1171
1623	0	Extremo 2A	-3E-09	-43.295	-1.6E-08	-0.7669	-8E-09	-48.9976
1623	0.5	Extremo 2A	-3E-09	-38.88	-1.6E-08	-0.7669	1.5E-10	-28.4538
1623	1	Extremo 2A	-3E-09	-34.466	-1.6E-08	-0.7669	8.3E-09	-10.1171
1624	0	Extremo 1A	-2.8E-10	-19.074	-4.7E-09	-0.1579	-1.7E-09	-10.1861
1624	0.3	Extremo 1A	-2.8E-10	-16.988	-4.7E-09	-0.1579	-2.7E-10	-4.7768
1624	0.6	Extremo 1A	-2.8E-10	-14.902	-4.7E-09	-0.1579	1.1E-09	0.0067
1624	0	Extremo 2A	-2.9E-10	-19.074	-4.4E-09	-0.1579	-1.6E-09	-10.1861
1624	0.3	Extremo 2A	-2.9E-10	-16.988	-4.4E-09	-0.1579	-2.5E-10	-4.7768
1624	0.6	Extremo 2A	-2.9E-10	-14.902	-4.4E-09	-0.1579	1.1E-09	0.0067
1625	0	Extremo 1A	-1.8E-10	15.085	3E-09	-0.0363	7.3E-10	-0.0249
1625	0.3	Extremo 1A	-1.8E-10	17.171	3E-09	-0.0363	-1.7E-10	-4.8633
1625	0.6	Extremo 1A	-1.8E-10	19.257	3E-09	-0.0363	-1.1E-09	-10.3274
1625	0	Extremo 2A	-2E-10	15.085	2.7E-09	-0.0363	6.6E-10	-0.0249
1625	0.3	Extremo 2A	-2E-10	17.171	2.7E-09	-0.0363	-1.5E-10	-4.8633
1625	0.6	Extremo 2A	-2E-10	19.257	2.7E-09	-0.0363	-9.6E-10	-10.3274
1626	0	Extremo 1A	-1.9E-09	35.165	1.1E-08	-0.042	5.7E-09	-10.4792
1626	0.5	Extremo 1A	-1.9E-09	39.579	1.1E-08	-0.042	1.1E-10	-29.1652
1626	1	Extremo 1A	-1.9E-09	43.993	1.1E-08	-0.042	-5.5E-09	-50.0582
1626	0	Extremo 2A	-2.1E-09	35.165	1E-08	-0.0421	5.2E-09	-10.4792
1626	0.5	Extremo 2A	-2.1E-09	39.579	1E-08	-0.0421	1E-10	-29.1652
1626	1	Extremo 2A	-2.1E-09	43.993	1E-08	-0.0421	-5E-09	-50.0582
1628	0	Extremo 1A	-2.3E-09	-43.29	-1.4E-08	-0.2667	-6.7E-09	-48.8961
1628	0.5	Extremo 1A	-2.3E-09	-38.876	-1.4E-08	-0.2667	1.3E-10	-28.3545
1628	1	Extremo 1A	-2.3E-09	-34.462	-1.4E-08	-0.2667	6.9E-09	-10.0199
1628	0	Extremo 2A	-2.5E-09	-43.29	-1.2E-08	-0.2667	-6E-09	-48.8961
1628	0.5	Extremo 2A	-2.5E-09	-38.876	-1.2E-08	-0.2667	1.1E-10	-28.3545
1628	1	Extremo 2A	-2.5E-09	-34.462	-1.2E-08	-0.2667	6.3E-09	-10.0199
1629	0	Extremo 1A	-2.2E-10	-19.049	-3.7E-09	-0.0591	-1.3E-09	-10.1588
1629	0.3	Extremo 1A	-2.2E-10	-16.963	-3.7E-09	-0.0591	-2.1E-10	-4.7571
1629	0.6	Extremo 1A	-2.2E-10	-14.877	-3.7E-09	-0.0591	8.9E-10	0.0189
1629	0	Extremo 2A	-2.4E-10	-19.049	-3.3E-09	-0.059	-1.2E-09	-10.1588
1629	0.3	Extremo 2A	-2.4E-10	-16.963	-3.3E-09	-0.059	-1.9E-10	-4.7571
1629	0.6	Extremo 2A	-2.4E-10	-14.877	-3.3E-09	-0.059	8E-10	0.0189
1630	0	Extremo 1A	-1.4E-10	15.085	2.3E-09	0.0363	5.7E-10	-0.0249
1630	0.3	Extremo 1A	-1.4E-10	17.171	2.3E-09	0.0363	-1.3E-10	-4.8633
1630	0.6	Extremo 1A	-1.4E-10	19.257	2.3E-09	0.0363	-8.3E-10	-10.3274
1630	0	Extremo 2A	-1.6E-10	15.085	2E-09	0.0363	4.8E-10	-0.0249
1630	0.3	Extremo 2A	-1.6E-10	17.171	2E-09	0.0363	-1.1E-10	-4.8633
1630	0.6	Extremo 2A	-1.6E-10	19.257	2E-09	0.0363	-7E-10	-10.3274
1631	0	Extremo 1A	-1.5E-09	35.165	8.8E-09	0.0417	4.5E-09	-10.4793
1631	0.5	Extremo 1A	-1.5E-09	39.579	8.8E-09	0.0417	8.3E-11	-29.1652
1631	1	Extremo 1A	-1.5E-09	43.993	8.8E-09	0.0417	-4.3E-09	-50.0582
1631	0	Extremo 2A	-1.7E-09	35.165	7.4E-09	0.0416	3.8E-09	-10.4793
1631	0.5	Extremo 2A	-1.7E-09	39.579	7.4E-09	0.0416	6.9E-11	-29.1652
1631	1	Extremo 2A	-1.7E-09	43.993	7.4E-09	0.0416	-3.6E-09	-50.0582
1633	0	Extremo 1A	-1.8E-09	-43.29	-1.1E-08	0.2672	-5.2E-09	-48.8961
1633	0.5	Extremo 1A	-1.8E-09	-38.876	-1.1E-08	0.2672	1E-10	-28.3545
1633	1	Extremo 1A	-1.8E-09	-34.462	-1.1E-08	0.2672	5.4E-09	-10.0199
1633	0	Extremo 2A	-2.1E-09	-43.29	-9E-09	0.2673	-4.4E-09	-48.8961
1633	0.5	Extremo 2A	-2.1E-09	-38.876	-9E-09	0.2673	8.7E-11	-28.3545
1633	1	Extremo 2A	-2.1E-09	-34.462	-9E-09	0.2673	4.6E-09	-10.0199
1634	0	Extremo 1A	-1.7E-10	-19.049	-2.9E-09	0.0592	-1E-09	-10.1588
1634	0.3	Extremo 1A	-1.7E-10	-16.963	-2.9E-09	0.0592	-1.6E-10	-4.7571
1634	0.6	Extremo 1A	-1.7E-10	-14.877	-2.9E-09	0.0592	6.9E-10	0.0189
1634	0	Extremo 2A	-2E-10	-19.049	-2.4E-09	0.0592	-8.6E-10	-10.1588
1634	0.3	Extremo 2A	-2E-10	-16.963	-2.4E-09	0.0592	-1.4E-10	-4.7571
1634	0.6	Extremo 2A	-2E-10	-14.877	-2.4E-09	0.0592	5.9E-10	0.0189
1635	0	Extremo 1A	-1.1E-10	15.097	1.8E-09	0.1191	4.4E-10	-0.0318
1635	0.3	Extremo 1A	-1.1E-10	17.183	1.8E-09	0.1191	-1E-10	-4.8738
1635	0.6	Extremo 1A	-1.1E-10	19.269	1.8E-09	0.1191	-6.4E-10	-10.3416
1635	0	Extremo 2A	-1.4E-10	15.097	1.3E-09	0.1191	3.3E-10	-0.0318
1635	0.3	Extremo 2A	-1.4E-10	17.183	1.3E-09	0.1191	-7.5E-11	-4.8738
1635	0.6	Extremo 2A	-1.4E-10	19.269	1.3E-09	0.1191	-4.8E-10	-10.3416
1636	0	Extremo 1A	-1.2E-09	35.153	6.8E-09	0.1377	3.4E-09	-10.5322
1636	0.5	Extremo 1A	-1.2E-09	39.567	6.8E-09	0.1377	6.2E-11	-29.212
1636	1	Extremo 1A	-1.2E-09	43.981	6.8E-09	0.1377	-3.3E-09	-50.0988
1636	0	Extremo 2A	-1.5E-09	35.153	5E-09	0.1376	2.5E-09	-10.5323

1636	0.5	Extremo 2A	-1.5E-09	39.567	5E-09	0.1376	4.3E-11	-29.212
1636	1	Extremo 2A	-1.5E-09	43.981	5E-09	0.1376	-2.5E-09	-50.0988
1638	0	Extremo 1A	-1.4E-09	-43.294	-8.2E-09	0.7675	-4E-09	-48.9976
1638	0.5	Extremo 1A	-1.4E-09	-38.88	-8.2E-09	0.7675	8.2E-11	-28.4539
1638	1	Extremo 1A	-1.4E-09	-34.466	-8.2E-09	0.7675	4.2E-09	-10.1172
1638	0	Extremo 2A	-1.8E-09	-43.294	-6.2E-09	0.7675	-3E-09	-48.9976
1638	0.5	Extremo 2A	-1.8E-09	-38.88	-6.2E-09	0.7675	6.4E-11	-28.4539
1638	1	Extremo 2A	-1.8E-09	-34.466	-6.2E-09	0.7675	3.2E-09	-10.1172
1639	0	Extremo 1A	-1.4E-10	-19.074	-2.2E-09	0.158	-7.9E-10	-10.1861
1639	0.3	Extremo 1A	-1.4E-10	-16.988	-2.2E-09	0.158	-1.3E-10	-4.7768
1639	0.6	Extremo 1A	-1.4E-10	-14.902	-2.2E-09	0.158	5.4E-10	0.0067
1639	0	Extremo 2A	-1.7E-10	-19.074	-1.7E-09	0.158	-5.9E-10	-10.1861
1639	0.3	Extremo 2A	-1.7E-10	-16.988	-1.7E-09	0.158	-9.4E-11	-4.7768
1639	0.6	Extremo 2A	-1.7E-10	-14.902	-1.7E-09	0.158	4E-10	0.0067
1640	0	Extremo 1A	-9.3E-11	15.135	1.4E-09	0.2404	3.4E-10	-0.0483
1640	0.3	Extremo 1A	-9.3E-11	17.221	1.4E-09	0.2404	-7.8E-11	-4.9016
1640	0.6	Extremo 1A	-9.3E-11	19.307	1.4E-09	0.2404	-4.9E-10	-10.3807
1640	0	Extremo 2A	-1.3E-10	15.135	7.9E-10	0.2404	1.9E-10	-0.0483
1640	0.3	Extremo 2A	-1.3E-10	17.221	7.9E-10	0.2404	-4.5E-11	-4.9016
1640	0.6	Extremo 2A	-1.3E-10	19.307	7.9E-10	0.2404	-2.8E-10	-10.3807
1641	0	Extremo 1A	-9.6E-10	35.161	5.2E-09	0.2991	2.6E-09	-10.6727
1641	0.5	Extremo 1A	-9.6E-10	39.576	5.2E-09	0.2991	4.5E-11	-29.357
1641	1	Extremo 1A	-9.6E-10	43.99	5.2E-09	0.2991	-2.5E-09	-50.2482
1641	0	Extremo 2A	-1.3E-09	35.161	2.9E-09	0.299	1.5E-09	-10.6727
1641	0.5	Extremo 2A	-1.3E-09	39.576	2.9E-09	0.299	2.1E-11	-29.357
1641	1	Extremo 2A	-1.3E-09	43.99	2.9E-09	0.299	-1.4E-09	-50.2483
1643	0	Extremo 1A	-1.1E-09	-43.333	-6.4E-09	1.1286	-3.1E-09	-49.2845
1643	0.5	Extremo 1A	-1.1E-09	-38.919	-6.4E-09	1.1286	6.6E-11	-28.7214
1643	1	Extremo 1A	-1.1E-09	-34.505	-6.4E-09	1.1286	3.3E-09	-10.3654
1643	0	Extremo 2A	-1.6E-09	-43.333	-3.7E-09	1.1287	-1.8E-09	-49.2845
1643	0.5	Extremo 2A	-1.6E-09	-38.919	-3.7E-09	1.1287	4.3E-11	-28.7215
1643	1	Extremo 2A	-1.6E-09	-34.505	-3.7E-09	1.1287	1.9E-09	-10.3654
1644	0	Extremo 1A	-1.1E-10	-19.142	-1.7E-09	0.1865	-6.1E-10	-10.256
1644	0.3	Extremo 1A	-1.1E-10	-17.056	-1.7E-09	0.1865	-9.7E-11	-4.8265
1644	0.6	Extremo 1A	-1.1E-10	-14.97	-1.7E-09	0.1865	4.2E-10	-0.0227
1644	0	Extremo 2A	-1.5E-10	-19.142	-1E-09	0.1865	-3.6E-10	-10.256
1644	0.3	Extremo 2A	-1.5E-10	-17.056	-1E-09	0.1865	-5.7E-11	-4.8265
1644	0.6	Extremo 2A	-1.5E-10	-14.97	-1E-09	0.1865	2.4E-10	-0.0227
1645	0	Extremo 1A	-7.4E-11	15.224	1E-09	0.4444	2.5E-10	-0.0726
1645	0.3	Extremo 1A	-7.4E-11	17.309	1E-09	0.4444	-5.9E-11	-4.9526
1645	0.6	Extremo 1A	-7.4E-11	19.395	1E-09	0.4444	-3.7E-10	-10.4583
1645	0	Extremo 2A	-1.2E-10	15.224	2.8E-10	0.4444	6.8E-11	-0.0726
1645	0.3	Extremo 2A	-1.2E-10	17.31	2.8E-10	0.4444	-1.7E-11	-4.9526
1645	0.6	Extremo 2A	-1.2E-10	19.395	2.8E-10	0.4444	-1E-10	-10.4583
1646	0	Extremo 1A	-7.8E-10	35.33	3.9E-09	0.6667	2E-09	-10.924
1646	0.5	Extremo 1A	-7.8E-10	39.744	3.9E-09	0.6667	3.1E-11	-29.6926
1646	1	Extremo 1A	-7.8E-10	44.158	3.9E-09	0.6667	-1.9E-09	-50.6682
1646	0	Extremo 2A	-1.2E-09	35.33	1.1E-09	0.6667	5.3E-10	-10.9241
1646	0.5	Extremo 2A	-1.2E-09	39.744	1.1E-09	0.6667	1.1E-12	-29.6927
1646	1	Extremo 2A	-1.2E-09	44.158	1.1E-09	0.6667	-5.3E-10	-50.6683
1648	0	Extremo 1A	-9.1E-10	-43.557	-4.9E-09	1.1207	-2.4E-09	-49.9694
1648	0.5	Extremo 1A	-9.1E-10	-39.143	-4.9E-09	1.1207	5.3E-11	-29.2943
1648	1	Extremo 1A	-9.1E-10	-34.729	-4.9E-09	1.1207	2.5E-09	-10.8262
1648	0	Extremo 2A	-1.5E-09	-43.557	-1.5E-09	1.1207	-7.3E-10	-49.9695
1648	0.5	Extremo 2A	-1.5E-09	-39.143	-1.5E-09	1.1207	2.4E-11	-29.2943
1648	1	Extremo 2A	-1.5E-09	-34.729	-1.5E-09	1.1207	7.8E-10	-10.8262
1649	0	Extremo 1A	-8.7E-11	-19.289	-1.3E-09	0.065	-4.7E-10	-10.3926
1649	0.3	Extremo 1A	-8.7E-11	-17.203	-1.3E-09	0.065	-7.4E-11	-4.9188
1649	0.6	Extremo 1A	-8.7E-11	-15.117	-1.3E-09	0.065	3.2E-10	-0.0708
1649	0	Extremo 2A	-1.4E-10	-19.289	-4E-10	0.065	-1.4E-10	-10.3926
1649	0.3	Extremo 2A	-1.4E-10	-17.203	-4E-10	0.065	-2.2E-11	-4.9188
1649	0.6	Extremo 2A	-1.4E-10	-15.117	-4E-10	0.065	9.9E-11	-0.0708
1650	0	Extremo 1A	-6.5E-11	15.382	7.6E-10	0.7563	1.8E-10	-0.0794
1650	0.3	Extremo 1A	-6.5E-11	17.468	7.6E-10	0.7563	-4.3E-11	-5.007
1650	0.6	Extremo 1A	-6.5E-11	19.554	7.6E-10	0.7563	-2.7E-10	-10.5603
1650	0	Extremo 2A	-1.2E-10	15.382	-2E-10	0.7563	-5E-11	-0.0794
1650	0.3	Extremo 2A	-1.2E-10	17.468	-2E-10	0.7563	9.9E-12	-5.007
1650	0.6	Extremo 2A	-1.2E-10	19.554	-2E-10	0.7563	7E-11	-10.5603
1651	0	Extremo 1A	-6.4E-10	36.046	2.8E-09	1.4697	1.4E-09	-11.1394
1651	0.5	Extremo 1A	-6.4E-10	40.46	2.8E-09	1.4697	2.1E-11	-30.266
1651	1	Extremo 1A	-6.4E-10	44.874	2.8E-09	1.4697	-1.4E-09	-51.5996
1651	0	Extremo 2A	-1.2E-09	36.046	-7.6E-10	1.4698	-4E-10	-11.1395
1651	0.5	Extremo 2A	-1.2E-09	40.46	-7.6E-10	1.4698	-1.9E-11	-30.2661
1651	1	Extremo 2A	-1.2E-09	44.874	-7.6E-10	1.4698	3.6E-10	-51.5998
1653	0	Extremo 1A	-7.5E-10	-44.47	-3.6E-09	0.3439	-1.8E-09	-51.4237
1653	0.5	Extremo 1A	-7.5E-10	-40.056	-3.6E-09	0.3439	4.2E-11	-30.2924
1653	1	Extremo 1A	-7.5E-10	-35.641	-3.6E-09	0.3439	1.9E-09	-11.3681
1653	0	Extremo 2A	-1.5E-09	-44.47	6.5E-10	0.3438	3.3E-10	-51.4238
1653	0.5	Extremo 2A	-1.5E-09	-40.056	6.5E-10	0.3438	6.2E-12	-30.2925
1653	1	Extremo 2A	-1.5E-09	-35.642	6.5E-10	0.3438	-3.2E-10	-11.3682
1654	0	Extremo 1A	-7.6E-11	-19.555	-9.8E-10	-0.2825	-3.5E-10	-10.5921
1654	0.3	Extremo 1A	-7.6E-11	-17.469	-9.8E-10	-0.2825	-5.5E-11	-5.0384
1654	0.6	Extremo 1A	-7.6E-11	-15.383	-9.8E-10	-0.2825	2.4E-10	-0.1105
1654	0	Extremo 2A	-1.4E-10	-19.555	1.8E-10	-0.2826	6.5E-11	-10.5921
1654	0.3	Extremo 2A	-1.4E-10	-17.469	1.8E-10	-0.2826	1.2E-11	-5.0384
1654	0.6	Extremo 2A	-1.4E-10	-15.383	1.8E-10	-0.2826	-4.2E-11	-0.1105
1655	0	Extremo 1A	-5.7E-11	15.548	5.2E-10	1.0491	1.3E-10	-0.0074
1655	0.3	Extremo 1A	-5.7E-11	17.634	5.2E-10	1.0491	-3E-11	-4.9847
1655	0.6	Extremo 1A	-5.7E-11	19.72	5.2E-10	1.0491	-1.9E-10	-10.5877
1655	0	Extremo 2A	-1.2E-10	15.548	-6.9E-10	1.0492	-1.7E-10	-0.0074
1655	0.3	Extremo 2A	-1.2E-10	17.634	-6.9E-10	1.0492	3.7E-11	-4.9847
1655	0.6	Extremo 2A	-1.2E-10	19.72	-6.9E-10	1.0492	2.4E-10	-10.5877
1656	0	Extremo 1A	-5.4E-10	37.861	2E-09	2.6901	9.9E-10	-10.7704
1656	0.5	Extremo 1A	-5.4E-10	42.275	2E-09	2.6901	1.2E-11	-30.8042
1656	1	Extremo 1A	-5.4E-10	46.689	2E-09	2.6901	-9.7E-10	-53.0451
1656	0	Extremo 2A	-1.3E-09	37.861	-2.6E-09	2.6903	-1.3E-09	-10.7704
1656	0.5	Extremo 2A	-1.3E-09	42.275	-2.6E-09	2.6903	-3.9E-11	-30.8044
1656	1	Extremo 2A	-1.3E-09	46.689	-2.6E-09	2.6903	1.3E-09	-53.0455
1658	0	Extremo 1A	-6.3E-10	-46.978	-2.6E-09	-1.4054	-1.3E-09	-53.8523
1658	0.5	Extremo 1A	-6.3E-10	-42.564	-2.6E-09	-1.4054	3.3E-11	-31.4668
1658	1	Extremo 1A	-6.3E-10	-38.15	-2.6E-09	-1.4054	1.3E-09	-11.2882
1658	0	Extremo 2A	-1.5E-09	-46.978	2.9E-09	-1.4056	1.4E-09	-53.8527
1658	0.5	Extremo 2A	-1.5E-09	-42.564	2.9E-09	-1.4056	-1.2E-11	-31.467
1658	1	Extremo 2A	-1.5E-09	-38.15	2.9E-09	-1.4056	-1.4E-09	-11.2883
1659	0	Extremo 1A	-6.3E-11	-19.889	-7E-10	-0.7562	-2.5E-10	-10.7395
1659	0.3	Extremo 1A	-6.3E-11	-17.803	-7E-10	-0.7562	-3.9E-11	-5.0857
1659	0.6	Extremo 1A	-6.3E-11	-15.717	-7E-10	-0.7562	1.7E-10	-0.0578
1659	0	Extremo 2A	-1.5E-10	-19.889	7.7E-10	-0.7563	2.8E-10	-10.7395
1659	0.3	Extremo 2A	-1.5E-10	-17.803	7.7E-10	-0.7563	4.6E-11	-5.0858
1659	0.6	Extremo 2A	-1.5E-10	-15.717	7.7E-10	-0.7563	-1.9E-10	-0.0578
1660	0	Extremo 1A	-4.4E-11	15.502	3.2E-10	0.8966	7.8E-11	0.1567
1660	0.3	Extremo 1A	-4.4E-11	17.588	3.2E-10	0.8966	-1.9E-11	-4.8067
1660	0.6	Extremo 1A	-4.4E-11	19.674	3.2E-10	0.8966	-1.2E-10	-10.3959
1660	0	Extremo 2A	-1.4E-10	15.502	-1.2E-09	0.8967	-3E-10	0.1567
1660	0.3	Extremo 2A	-1.4E-10	17.588	-1.2E-09	0.8967	6.6E-11	-4.8067
1660	0.6	Extremo 2A	-1.4E-10	19.674	-1.2E-09	0.8967	4.3E-10	-10.3959
1661	0	Extremo 1A	-4.8E-10	40.046	1.2E-09	3.0352	6.1E-10	-9.3403
1661	0.5	Extremo 1A	-4.8E-10	44.46	1.2E-09	3.0352	3.9E-12	-30.4665
1661	1	Extremo 1A	-4.8E-10	48.874	1.2E-09	3.0352	-6E-10	-53.7999
1661	0	Extremo 2A	-1.4E-09	40.046	-4.6E-09	3.0356	-2.4E-09	-9.3402
1661	0.5	Extremo 2A	-1.4E-09	44.46	-4.6E-09	3.0356	-6.1E-11	-30.4667
1661	1	Extremo 2A	-1.4E-09	48.874	-4.6E-09	3.0356	2.2E-09	-53.8003
1663	0	Extremo 1A	-5.6E-10	-50.549	-1.7E-09	-2.6932	-8.5E-10	-55.8891
1663	0.5	Extremo 1A	-5.6E-10	-46.135	-1.7E-09	-2.6932	2.5E-11	-31.7182
1663	1	Extremo 1A	-5.6E-10	-41.721	-1.7E-09	-2.6932	9E-10	-9.7543
1663	0	Extremo 2A	-1.7E-09	-50.55	5.2E-09	-2.6936	2.6E-09	-55.8897
1663	0.5	Extremo 2A	-1.7E-09	-46.136	5.2E-09	-2.6936	-3.1E-11	-31.7185
1663	1	Extremo 2A	-1.7E-09	-41.721	5.2E-09	-2.6936	-2.7E-09	-9.7542
1664	0	Extremo 1A	-5.5E-11	-19.999	-4.7E-10	-0.8254	-1.7E-10	-10.6167
1664	0.3	Extremo 1A	-5.5E-11	-17.913	-4.7E-10	-0.8254	-2.6E-11	-4.9299
1664	0.6	Extremo 1A	-5.5E-11	-15.827	-4.7E-10	-0.8254	1.1E-10	0.1311
1664	0	Extremo 2A	-1.7E-10	-19.999	1.4E-09	-0.8255	5.1E-10	-10.6167
1664	0.3	Extremo 2A	-1.7E-10	-17.913	1.4E-09	-0.8255	8.3E-11	-4.9299
1664	0.6	Extremo 2A	-1.7E-10	-15.827	1.4E-09	-0.8255	-3.4E-10	0.1311
1665	0	Extremo 1A	-4.4E-11	15.275	1.4E-10	-1E-05	3.4E-11	0.2158
1665	0.3	Extremo 1A	-4.4E-11	17.361	1.4E-10	-1E-05	-8.8E-12	-4.6797
1665	0.6	Extremo 1A	-4.4E-11	19.447	1.4E-10	-1E-05	-5.1E-11	-10.201
1665	0	Extremo 2A	-1.6E-10	15.275	-1.8E-09	-6.7E-06	-4.4E-10	0.2158
1665	0.3	Extremo 2A	-1.6E-10	17.361	-1.8E-09	-6.7E-06	9.8E-11	-4.6797
1665	0.6	Extremo 2A	-1.6E-10	19.447	-1.8E-09	-6.7E-06	6.4E-10	-10.201
1666	0	Extremo 1A	-4.4E-10	38.961	5.3E-10	-0.00017	2.6E-10	-8.5881
1666	0.5	Extremo 1A	-4.4E-10	43.375	5.3E-10	-0.00017	-2.7E-12	-29.1723
1666	1	Extremo 1A	-4.4E-10	47.789	5.3E-10	-0.00017	-2.7E-10	-51.9635
1666	0	Extremo 2A	-1.6E-09	38.962	-6.8E-09	-0.00011	-3.5E-09	-8.588

1666	0.5	Extremo 2A	-1.6E-09	43.376	-6.8E-09	-0.00011	-8.7E-11	-29.1724
1666	1	Extremo 2A	-1.6E-09	47.79	-6.8E-09	-0.00011	3.3E-09	-51.9638
1668	0	Extremo 1A	-5.1E-10	-49.962	-9.6E-10	0.00025	-4.6E-10	-54.374
1668	0.5	Extremo 1A	-5.1E-10	-45.548	-9.6E-10	0.00025	1.8E-11	-30.4965
1668	1	Extremo 1A	-5.1E-10	-41.134	-9.6E-10	0.00025	5E-10	-8.8261
1668	0	Extremo 2A	-2E-09	-49.963	8E-09	0.00016	3.9E-09	-54.3745
1668	0.5	Extremo 2A	-2E-09	-45.549	8E-09	0.00016	-5.2E-11	-30.4967
1668	1	Extremo 2A	-2E-09	-41.134	8E-09	0.00016	-4E-09	-8.8259
1669	0	Extremo 1A	-4.6E-11	-19.805	-2.6E-10	4.6E-05	-9E-11	-10.4211
1669	0.3	Extremo 1A	-4.6E-11	-17.719	-2.6E-10	4.6E-05	-1.4E-11	-4.7926
1669	0.6	Extremo 1A	-4.6E-11	-15.633	-2.6E-10	4.6E-05	6.3E-11	0.2103
1669	0	Extremo 2A	-1.9E-10	-19.805	2.1E-09	2.9E-05	7.7E-10	-10.4211
1669	0.3	Extremo 2A	-1.9E-10	-17.719	2.1E-09	2.9E-05	1.3E-10	-4.7925
1669	0.6	Extremo 2A	-1.9E-10	-15.633	2.1E-09	2.9E-05	-5.2E-10	0.2103
1670	0	Extremo 1A	-4.1E-11	15.502	-2.8E-11	-0.8966	-7.7E-12	0.1567
1670	0.3	Extremo 1A	-4.1E-11	17.588	-2.8E-11	-0.8966	7.4E-13	-4.8067
1670	0.6	Extremo 1A	-4.1E-11	19.674	-2.8E-11	-0.8966	9.2E-12	-10.3959
1670	0	Extremo 2A	-1.8E-10	15.502	-2.5E-09	-0.8967	-6.1E-10	0.1567
1670	0.3	Extremo 2A	-1.8E-10	17.588	-2.5E-09	-0.8967	1.4E-10	-4.8067
1670	0.6	Extremo 2A	-1.8E-10	19.674	-2.5E-09	-0.8967	8.9E-10	-10.3959
1671	0	Extremo 1A	-4.2E-10	40.046	-1.1E-10	-3.0356	-6.5E-11	-9.3403
1671	0.5	Extremo 1A	-4.2E-10	44.46	-1.1E-10	-3.0356	-9.1E-12	-30.4665
1671	1	Extremo 1A	-4.2E-10	48.874	-1.1E-10	-3.0356	4.6E-11	-53.7998
1671	0	Extremo 2A	-1.9E-09	40.046	-9.4E-09	-3.0358	-4.8E-09	-9.3402
1671	0.5	Extremo 2A	-1.9E-09	44.46	-9.4E-09	-3.0358	-1.2E-10	-30.4667
1671	1	Extremo 2A	-1.9E-09	48.874	-9.4E-09	-3.0358	4.6E-09	-53.8003
1673	0	Extremo 1A	-4.9E-10	-50.549	-2.2E-10	2.6937	-1E-10	-55.8891
1673	0.5	Extremo 1A	-4.9E-10	-46.135	-2.2E-10	2.6937	1.1E-11	-31.7182
1673	1	Extremo 1A	-4.9E-10	-41.721	-2.2E-10	2.6937	1.2E-10	-9.7543
1673	0	Extremo 2A	-2.4E-09	-50.55	1.1E-08	2.6939	5.5E-09	-55.8897
1673	0.5	Extremo 2A	-2.4E-09	-46.136	1.1E-08	2.6939	-7.7E-11	-31.7185
1673	1	Extremo 2A	-2.4E-09	-41.721	1.1E-08	2.6939	-5.7E-09	-9.7542
1674	0	Extremo 1A	-4.9E-11	-19.999	-5.8E-11	0.8255	-2E-11	-10.6167
1674	0.3	Extremo 1A	-4.9E-11	-17.913	-5.8E-11	0.8255	-2.3E-12	-4.9299
1674	0.6	Extremo 1A	-4.9E-11	-15.827	-5.8E-11	0.8255	1.5E-11	0.1311
1674	0	Extremo 2A	-2.3E-10	-19.999	3E-09	0.8256	1.1E-09	-10.6167
1674	0.3	Extremo 2A	-2.3E-10	-17.913	3E-09	0.8256	1.8E-10	-4.9299
1674	0.6	Extremo 2A	-2.3E-10	-15.827	3E-09	0.8256	-7.3E-10	0.1311
1675	0	Extremo 1A	-4.1E-11	15.548	-2E-10	-1.0491	-4.9E-11	-0.0074
1675	0.3	Extremo 1A	-4.1E-11	17.634	-2E-10	-1.0491	1E-11	-4.9847
1675	0.6	Extremo 1A	-4.1E-11	19.72	-2E-10	-1.0491	6.9E-11	-10.5877
1675	0	Extremo 2A	-2.2E-10	15.548	-3.3E-09	-1.0492	-8.2E-10	-0.0074
1675	0.3	Extremo 2A	-2.2E-10	17.634	-3.3E-09	-1.0492	1.8E-10	-4.9847
1675	0.6	Extremo 2A	-2.2E-10	19.72	-3.3E-09	-1.0492	1.2E-09	-10.5877
1676	0	Extremo 1A	-4.3E-10	37.861	-7.4E-10	-2.6904	-3.9E-10	-10.7704
1676	0.5	Extremo 1A	-4.3E-10	42.275	-7.4E-10	-2.6904	-1.6E-11	-30.8042
1676	1	Extremo 1A	-4.3E-10	46.689	-7.4E-10	-2.6904	3.6E-10	-53.0451
1676	0	Extremo 2A	-2.3E-09	37.861	-1.3E-08	-2.6906	-6.4E-09	-10.7704
1676	0.5	Extremo 2A	-2.3E-09	42.275	-1.3E-08	-2.6906	-1.6E-10	-30.8044
1676	1	Extremo 2A	-2.3E-09	46.689	-1.3E-08	-2.6906	6.1E-09	-53.0455
1678	0	Extremo 1A	-5E-10	-46.978	5.1E-10	1.4059	2.6E-10	-53.8523
1678	0.5	Extremo 1A	-5E-10	-42.564	5.1E-10	1.4059	4.7E-12	-31.4667
1678	1	Extremo 1A	-5E-10	-38.15	5.1E-10	1.4059	-2.5E-10	-11.2882
1678	0	Extremo 2A	-2.9E-09	-46.978	1.5E-08	1.4059	7.4E-09	-53.8527
1678	0.5	Extremo 2A	-2.9E-09	-42.564	1.5E-08	1.4059	-1.1E-10	-31.467
1678	1	Extremo 2A	-2.9E-09	-38.15	1.5E-08	1.4059	-7.6E-09	-11.2883
1679	0	Extremo 1A	-4.9E-11	-19.889	1.4E-10	0.7563	5.1E-11	-10.7395
1679	0.3	Extremo 1A	-4.9E-11	-17.803	1.4E-10	0.7563	9.1E-12	-5.0857
1679	0.6	Extremo 1A	-4.9E-11	-15.717	1.4E-10	0.7563	-3.3E-11	-0.0578
1679	0	Extremo 2A	-2.8E-10	-19.889	4.1E-09	0.7563	1.5E-09	-10.7395
1679	0.3	Extremo 2A	-2.8E-10	-17.803	4.1E-09	0.7563	2.4E-10	-5.0858
1679	0.6	Extremo 2A	-2.8E-10	-15.717	4.1E-09	0.7563	-9.8E-10	-0.0578
1680	0	Extremo 1A	-4.4E-11	15.382	-3.7E-10	-0.7563	-9.2E-11	-0.0794
1680	0.3	Extremo 1A	-4.4E-11	17.468	-3.7E-10	-0.7563	2E-11	-5.0069
1680	0.6	Extremo 1A	-4.4E-11	19.554	-3.7E-10	-0.7563	1.3E-10	-10.5602
1680	0	Extremo 2A	-2.8E-10	15.382	-4.3E-09	-0.7563	-1.1E-09	-0.0794
1680	0.3	Extremo 2A	-2.8E-10	17.468	-4.3E-09	-0.7563	2.4E-10	-5.007
1680	0.6	Extremo 2A	-2.8E-10	19.554	-4.3E-09	-0.7563	1.5E-09	-10.5603
1681	0	Extremo 1A	-4.7E-10	36.046	-1.4E-09	-1.4701	-7.3E-10	-11.1394
1681	0.5	Extremo 1A	-4.7E-10	40.46	-1.4E-09	-1.4701	-2.2E-11	-30.266
1681	1	Extremo 1A	-4.7E-10	44.874	-1.4E-09	-1.4701	6.8E-10	-51.5996
1681	0	Extremo 2A	-2.9E-09	36.046	-1.6E-08	-1.4701	-8.4E-09	-11.1395
1681	0.5	Extremo 2A	-2.9E-09	40.46	-1.6E-08	-1.4701	-2.1E-10	-30.2661
1681	1	Extremo 2A	-2.9E-09	44.874	-1.6E-08	-1.4701	8E-09	-51.5998
1683	0	Extremo 1A	-5.4E-10	-44.47	1.3E-09	-0.3434	6.4E-10	-51.4236
1683	0.5	Extremo 1A	-5.4E-10	-40.056	1.3E-09	-0.3434	-2.3E-12	-30.2924
1683	1	Extremo 1A	-5.4E-10	-35.641	1.3E-09	-0.3434	-6.5E-10	-11.3681
1683	0	Extremo 2A	-3.6E-09	-44.47	2E-08	-0.3435	9.8E-09	-51.4238
1683	0.5	Extremo 2A	-3.6E-09	-40.056	2E-08	-0.3435	-1.4E-10	-30.2925
1683	1	Extremo 2A	-3.6E-09	-35.642	2E-08	-0.3435	-1E-08	-11.3682
1684	0	Extremo 1A	-5.5E-11	-19.555	3.5E-10	0.2826	1.3E-10	-10.5921
1684	0.3	Extremo 1A	-5.5E-11	-17.469	3.5E-10	0.2826	2.1E-11	-5.0384
1684	0.6	Extremo 1A	-5.5E-11	-15.383	3.5E-10	0.2826	-8.4E-11	-0.1105
1684	0	Extremo 2A	-3.5E-10	-19.555	5.4E-09	0.2826	1.9E-09	-10.5921
1684	0.3	Extremo 2A	-3.5E-10	-17.469	5.4E-09	0.2826	3.1E-10	-5.0384
1684	0.6	Extremo 2A	-3.5E-10	-15.383	5.4E-09	0.2826	-1.3E-09	-0.1105
1685	0	Extremo 1A	-4.6E-11	15.224	-5.7E-10	-0.4444	-1.4E-10	-0.0726
1685	0.3	Extremo 1A	-4.6E-11	17.309	-5.7E-10	-0.4444	3.1E-11	-4.9526
1685	0.6	Extremo 1A	-4.6E-11	19.395	-5.7E-10	-0.4444	2E-10	-10.4583
1685	0	Extremo 2A	-3.4E-10	15.224	-5.6E-09	-0.4444	-1.4E-09	-0.0726
1685	0.3	Extremo 2A	-3.4E-10	17.31	-5.6E-09	-0.4444	3E-10	-4.9526
1685	0.6	Extremo 2A	-3.4E-10	19.395	-5.6E-09	-0.4444	2E-09	-10.4583
1686	0	Extremo 1A	-5.3E-10	35.33	-2.1E-09	-0.667	-1.1E-09	-10.924
1686	0.5	Extremo 1A	-5.3E-10	39.744	-2.1E-09	-0.667	-3E-11	-29.6926
1686	1	Extremo 1A	-5.3E-10	44.158	-2.1E-09	-0.667	1E-09	-50.6682
1686	0	Extremo 2A	-3.5E-09	35.33	-2.1E-08	-0.6669	-1.1E-08	-10.9241
1686	0.5	Extremo 2A	-3.5E-09	39.744	-2.1E-08	-0.6669	-2.7E-10	-29.6927
1686	1	Extremo 2A	-3.5E-09	44.158	-2.1E-08	-0.6669	1E-08	-50.6683
1688	0	Extremo 1A	-6.3E-10	-43.557	2.2E-09	-1.1202	1.1E-09	-49.9694
1688	0.5	Extremo 1A	-6.3E-10	-39.143	2.2E-09	-1.1202	-9.6E-12	-29.2943
1688	1	Extremo 1A	-6.3E-10	-34.729	2.2E-09	-1.1202	-1.1E-09	-10.8262
1688	0	Extremo 2A	-4.6E-09	-43.557	2.6E-08	-1.1204	1.3E-08	-49.9695
1688	0.5	Extremo 2A	-4.6E-09	-39.143	2.6E-08	-1.1204	-1.8E-10	-29.2943
1688	1	Extremo 2A	-4.6E-09	-34.729	2.6E-08	-1.1204	-1.3E-08	-10.8262
1689	0	Extremo 1A	-6.5E-11	-19.289	5.8E-10	-0.0649	2.1E-10	-10.3926
1689	0.3	Extremo 1A	-6.5E-11	-17.203	5.8E-10	-0.0649	3.5E-11	-4.9188
1689	0.6	Extremo 1A	-6.5E-11	-15.117	5.8E-10	-0.0649	-1.4E-10	-0.0708
1689	0	Extremo 2A	-4.5E-10	-19.289	7E-09	-0.065	2.5E-09	-10.3926
1689	0.3	Extremo 2A	-4.5E-10	-17.203	7E-09	-0.065	4.1E-10	-4.9188
1689	0.6	Extremo 2A	-4.5E-10	-15.117	7E-09	-0.065	-1.7E-09	-0.0708
1690	0	Extremo 1A	-6E-11	15.135	-8E-10	-0.2404	-2E-10	-0.0483
1690	0.3	Extremo 1A	-6E-11	17.221	-8E-10	-0.2404	4.3E-11	-4.9016
1690	0.6	Extremo 1A	-6E-11	19.307	-8E-10	-0.2404	2.8E-10	-10.3807
1690	0	Extremo 2A	-4.3E-10	15.135	-7.1E-09	-0.2404	-1.8E-09	-0.0483
1690	0.3	Extremo 2A	-4.3E-10	17.221	-7.1E-09	-0.2404	3.9E-10	-4.9016
1690	0.6	Extremo 2A	-4.3E-10	19.307	-7.1E-09	-0.2404	2.5E-09	-10.3807
1691	0	Extremo 1A	-6.2E-10	35.161	-3E-09	-0.2994	-1.5E-09	-10.6727
1691	0.5	Extremo 1A	-6.2E-10	39.576	-3E-09	-0.2994	-3.9E-11	-29.3569
1691	1	Extremo 1A	-6.2E-10	43.99	-3E-09	-0.2994	1.5E-09	-50.2482
1691	0	Extremo 2A	-4.4E-09	35.161	-2.7E-08	-0.2992	-1.4E-08	-10.6727
1691	0.5	Extremo 2A	-4.4E-09	39.576	-2.7E-08	-0.2992	-3.5E-10	-29.357
1691	1	Extremo 2A	-4.4E-09	43.99	-2.7E-08	-0.2992	1.3E-08	-50.2483
1693	0	Extremo 1A	-7.4E-10	-43.333	3.2E-09	-1.1281	1.6E-09	-49.2845
1693	0.5	Extremo 1A	-7.4E-10	-38.919	3.2E-09	-1.1281	-1.8E-11	-28.7214
1693	1	Extremo 1A	-7.4E-10	-34.505	3.2E-09	-1.1281	-1.6E-09	-10.3654
1693	0	Extremo 2A	-5.8E-09	-43.333	3.4E-08	-1.1283	1.7E-08	-49.2845
1693	0.5	Extremo 2A	-5.8E-09	-38.919	3.4E-08	-1.1283	-2.3E-10	-28.7215
1693	1	Extremo 2A	-5.8E-09	-34.505	3.4E-08	-1.1283	-1.7E-08	-10.3654
1694	0	Extremo 1A	-7.4E-11	-19.142	8.5E-10	-0.1864	3.1E-10	-10.256
1694	0.3	Extremo 1A	-7.4E-11	-17.056	8.5E-10	-0.1864	5E-11	-4.8265
1694	0.6	Extremo 1A	-7.4E-11	-14.97	8.5E-10	-0.1864	-2.1E-10	-0.0227
1694	0	Extremo 2A	-5.6E-10	-19.142	9.1E-09	-0.1864	3.2E-09	-10.256
1694	0.3	Extremo 2A	-5.6E-10	-17.056	9.1E-09	-0.1864	5.3E-10	-4.8265
1694	0.6	Extremo 2A	-5.6E-10	-14.97	9.1E-09	-0.1864	-2.2E-09	-0.0227
1695	0	Extremo 1A	-7.1E-11	15.097	-1.1E-09	-0.1191	-2.6E-10	-0.0318
1695	0.3	Extremo 1A	-7.1E-11	17.183	-1.1E-09	-0.1191	5.8E-11	-4.8738
1695	0.6	Extremo 1A	-7.1E-11	19.269	-1.1E-09	-0.1191	3.8E-10	-10.3416
1695	0	Extremo 2A	-5.4E-10	15.097	-9.1E-09	-0.1191	-2.2E-09	-0.0318
1695	0.3	Extremo 2A	-5.4E-10	17.183	-9.1E-09	-0.1191	4.9E-10	-4.8738
1695	0.6	Extremo 2A	-5.4E-10	19.269	-9.1E-09	-0.1191	3.2E-09	-10.3416
1696	0	Extremo 1A	-7.4E-10	35.152	-4E-09	-0.138	-2E-09	-10.5322
1696	0.5	Extremo 1A	-7.4E-10	39.567	-4E-09	-0.138	-5E-11	-29.212
1696	1	Extremo 1A	-7.4E-10	43.981	-4E-09	-0.138	1.9E-09	-50.0988
1696	0	Extremo 2A	-5.6E-09	35.153	-3.4E-08	-0.1379	-1.8E-08	-10.5322

1696	0.5	Extremo 2A	-5.6E-09	39.567	-3.4E-08	-0.1379	-4.5E-10	-29.212
1696	1	Extremo 2A	-5.6E-09	43.981	-3.4E-08	-0.1379	1.7E-08	-50.0988
1698	0	Extremo 1A	-8.9E-10	-43.294	4.4E-09	-0.7669	2.2E-09	-48.9976
1698	0.5	Extremo 1A	-8.9E-10	-38.88	4.4E-09	-0.7669	-2.8E-11	-28.4539
1698	1	Extremo 1A	-8.9E-10	-34.466	4.4E-09	-0.7669	-2.2E-09	-10.1172
1698	0	Extremo 2A	-7.3E-09	-43.294	4.3E-08	-0.7672	2.1E-08	-48.9976
1698	0.5	Extremo 2A	-7.3E-09	-38.88	4.3E-08	-0.7672	-2.9E-10	-28.4539
1698	1	Extremo 2A	-7.3E-09	-34.466	4.3E-08	-0.7672	-2.2E-08	-10.1172
1699	0	Extremo 1A	-8.5E-11	-19.074	1.2E-09	-0.1579	4.2E-10	-10.1861
1699	0.3	Extremo 1A	-8.5E-11	-16.988	1.2E-09	-0.1579	6.9E-11	-4.7768
1699	0.6	Extremo 1A	-8.5E-11	-14.902	1.2E-09	-0.1579	-2.8E-10	0.0067
1699	0	Extremo 2A	-7.1E-10	-19.074	1.2E-08	-0.1579	4.2E-09	-10.1861
1699	0.3	Extremo 2A	-7.1E-10	-16.988	1.2E-08	-0.1579	6.8E-10	-4.7768
1699	0.6	Extremo 2A	-7.1E-10	-14.902	1.2E-08	-0.1579	-2.8E-09	0.0067
1700	0	Extremo 1A	-9E-11	15.085	-1.4E-09	-0.0363	-3.4E-10	-0.0249
1700	0.3	Extremo 1A	-9E-11	17.171	-1.4E-09	-0.0363	7.6E-11	-4.8633
1700	0.6	Extremo 1A	-9E-11	19.257	-1.4E-09	-0.0363	4.9E-10	-10.3274
1700	0	Extremo 2A	-6.7E-10	15.085	-1.2E-08	-0.0363	-2.8E-09	-0.0249
1700	0.3	Extremo 2A	-6.7E-10	17.171	-1.2E-08	-0.0363	6.2E-10	-4.8633
1700	0.6	Extremo 2A	-6.7E-10	19.257	-1.2E-08	-0.0363	4.1E-09	-10.3274
1701	0	Extremo 1A	-9.1E-10	35.165	-5.2E-09	-0.0421	-2.7E-09	-10.4793
1701	0.5	Extremo 1A	-9.1E-10	39.579	-5.2E-09	-0.0421	-6.4E-11	-29.1652
1701	1	Extremo 1A	-9.1E-10	43.993	-5.2E-09	-0.0421	2.5E-09	-50.0581
1701	0	Extremo 2A	-7E-09	35.165	-4.3E-08	-0.0419	-2.2E-08	-10.4793
1701	0.5	Extremo 2A	-7E-09	39.579	-4.3E-08	-0.0419	-5.9E-10	-29.1652
1701	1	Extremo 2A	-7E-09	43.993	-4.3E-08	-0.0419	2.1E-08	-50.0582
1703	0	Extremo 1A	-1.1E-09	-43.29	5.8E-09	-0.2667	2.9E-09	-48.8961
1703	0.5	Extremo 1A	-1.1E-09	-38.876	5.8E-09	-0.2667	-4E-11	-28.3544
1703	1	Extremo 1A	-1.1E-09	-34.462	5.8E-09	-0.2667	-3E-09	-10.0199
1703	0	Extremo 2A	-9.4E-09	-43.29	5.6E-08	-0.267	2.7E-08	-48.8961
1703	0.5	Extremo 2A	-9.4E-09	-38.876	5.6E-08	-0.267	-3.6E-10	-28.3545
1703	1	Extremo 2A	-9.4E-09	-34.462	5.6E-08	-0.267	-2.8E-08	-10.0199
1704	0	Extremo 1A	-1.1E-10	-19.049	1.6E-09	-0.059	5.6E-10	-10.1588
1704	0.3	Extremo 1A	-1.1E-10	-16.963	1.6E-09	-0.059	9.2E-11	-4.7571
1704	0.6	Extremo 1A	-1.1E-10	-14.877	1.6E-09	-0.059	-3.8E-10	0.0189
1704	0	Extremo 2A	-9E-10	-19.049	1.5E-08	-0.0591	5.4E-09	-10.1588
1704	0.3	Extremo 2A	-9E-10	-16.963	1.5E-08	-0.0591	8.8E-10	-4.7571
1704	0.6	Extremo 2A	-9E-10	-14.877	1.5E-08	-0.0591	-3.6E-09	0.0189
1705	0	Extremo 1A	-1.1E-10	15.085	-1.8E-09	0.0363	-4.4E-10	-0.0249
1705	0.3	Extremo 1A	-1.1E-10	17.171	-1.8E-09	0.0363	9.8E-11	-4.8633
1705	0.6	Extremo 1A	-1.1E-10	19.257	-1.8E-09	0.0363	6.3E-10	-10.3274
1705	0	Extremo 2A	-8.5E-10	15.085	-1.5E-08	0.0363	-3.6E-09	-0.0249
1705	0.3	Extremo 2A	-8.5E-10	17.171	-1.5E-08	0.0363	7.8E-10	-4.8633
1705	0.6	Extremo 2A	-8.5E-10	19.257	-1.5E-08	0.0363	5.2E-09	-10.3274
1706	0	Extremo 1A	-1.1E-09	35.165	-6.7E-09	0.0416	-3.4E-09	-10.4793
1706	0.5	Extremo 1A	-1.1E-09	39.579	-6.7E-09	0.0416	-8.2E-11	-29.1652
1706	1	Extremo 1A	-1.1E-09	43.993	-6.7E-09	0.0416	3.3E-09	-50.0582
1706	0	Extremo 2A	-8.8E-09	35.165	-5.5E-08	0.0418	-2.8E-08	-10.4793
1706	0.5	Extremo 2A	-8.8E-09	39.579	-5.5E-08	0.0418	-7.6E-10	-29.1652
1706	1	Extremo 2A	-8.8E-09	43.993	-5.5E-08	0.0418	2.7E-08	-50.0582
1708	0	Extremo 1A	-1.4E-09	-43.29	7.7E-09	0.2673	3.8E-09	-48.8961
1708	0.5	Extremo 1A	-1.4E-09	-38.876	7.7E-09	0.2673	-5.4E-11	-28.3545
1708	1	Extremo 1A	-1.4E-09	-34.462	7.7E-09	0.2673	-3.9E-09	-10.0199
1708	0	Extremo 2A	-1.2E-08	-43.29	7.1E-08	0.267	3.5E-08	-48.8961
1708	0.5	Extremo 2A	-1.2E-08	-38.876	7.1E-08	0.267	-4.5E-10	-28.3545
1708	1	Extremo 2A	-1.2E-08	-34.462	7.1E-08	0.267	-3.6E-08	-10.0199
1709	0	Extremo 1A	-1.3E-10	-19.049	2.1E-09	0.0592	7.4E-10	-10.1588
1709	0.3	Extremo 1A	-1.3E-10	-16.963	2.1E-09	0.0592	1.2E-10	-4.7571
1709	0.6	Extremo 1A	-1.3E-10	-14.877	2.1E-09	0.0592	-5E-10	0.0189
1709	0	Extremo 2A	-1.1E-09	-19.049	1.9E-08	0.0591	6.9E-09	-10.1588
1709	0.3	Extremo 2A	-1.1E-09	-16.963	1.9E-08	0.0591	1.1E-09	-4.7571
1709	0.6	Extremo 2A	-1.1E-09	-14.877	1.9E-08	0.0591	-4.6E-09	0.0189
1710	0	Extremo 1A	-1.3E-10	15.097	-2.3E-09	0.1191	-5.6E-10	-0.0318
1710	0.3	Extremo 1A	-1.3E-10	17.183	-2.3E-09	0.1191	1.3E-10	-4.8738
1710	0.6	Extremo 1A	-1.3E-10	19.269	-2.3E-09	0.1191	8.1E-10	-10.3416
1710	0	Extremo 2A	-1.1E-09	15.097	-1.8E-08	0.1191	-4.5E-09	-0.0318
1710	0.3	Extremo 2A	-1.1E-09	17.183	-1.8E-08	0.1191	9.8E-10	-4.8738
1710	0.6	Extremo 2A	-1.1E-09	19.269	-1.8E-08	0.1191	6.5E-09	-10.3416
1711	0	Extremo 1A	-1.4E-09	35.152	-8.6E-09	0.1376	-4.4E-09	-10.5323
1711	0.5	Extremo 1A	-1.4E-09	39.567	-8.6E-09	0.1376	-1E-10	-29.2121
1711	1	Extremo 1A	-1.4E-09	43.981	-8.6E-09	0.1376	4.2E-09	-50.0989
1711	0	Extremo 2A	-1.1E-08	35.153	-7E-08	0.1378	-3.6E-08	-10.5323

1711	0.5	Extremo 2A	-1.1E-08	39.567	-7E-08	0.1378	-9.9E-10	-29.212
1711	1	Extremo 2A	-1.1E-08	43.981	-7E-08	0.1378	3.4E-08	-50.0988
1713	0	Extremo 1A	-1.7E-09	-43.294	1E-08	0.7676	4.9E-09	-48.9976
1713	0.5	Extremo 1A	-1.7E-09	-38.88	1E-08	0.7676	-7.2E-11	-28.4539
1713	1	Extremo 1A	-1.7E-09	-34.466	1E-08	0.7676	-5.1E-09	-10.1172
1713	0	Extremo 2A	-1.5E-08	-43.294	9.1E-08	0.7673	4.5E-08	-48.9976
1713	0.5	Extremo 2A	-1.5E-08	-38.88	9.1E-08	0.7673	-5.6E-10	-28.4539
1713	1	Extremo 2A	-1.5E-08	-34.466	9.1E-08	0.7673	-4.6E-08	-10.1172
1714	0	Extremo 1A	-1.7E-10	-19.074	2.7E-09	0.158	9.6E-10	-10.1861
1714	0.3	Extremo 1A	-1.7E-10	-16.988	2.7E-09	0.158	1.6E-10	-4.7768
1714	0.6	Extremo 1A	-1.7E-10	-14.902	2.7E-09	0.158	-6.5E-10	0.0067
1714	0	Extremo 2A	-1.5E-09	-19.074	2.5E-08	0.1579	8.9E-09	-10.1861
1714	0.3	Extremo 2A	-1.5E-09	-16.988	2.5E-08	0.1579	1.5E-09	-4.7768
1714	0.6	Extremo 2A	-1.5E-09	-14.902	2.5E-08	0.1579	-6E-09	0.0067
1715	0	Extremo 1A	-1.7E-10	15.135	-2.9E-09	0.2405	-7.1E-10	-0.0483
1715	0.3	Extremo 1A	-1.7E-10	17.221	-2.9E-09	0.2405	1.6E-10	-4.9017
1715	0.6	Extremo 1A	-1.7E-10	19.307	-2.9E-09	0.2405	1E-09	-10.3808
1715	0	Extremo 2A	-1.3E-09	15.135	-2.3E-08	0.2404	-5.7E-09	-0.0483
1715	0.3	Extremo 2A	-1.3E-09	17.221	-2.3E-08	0.2404	1.2E-09	-4.9016
1715	0.6	Extremo 2A	-1.3E-09	19.307	-2.3E-08	0.2404	8.2E-09	-10.3807
1716	0	Extremo 1A	-1.8E-09	35.161	-1.1E-08	0.299	-5.6E-09	-10.6729
1716	0.5	Extremo 1A	-1.8E-09	39.576	-1.1E-08	0.299	-1.3E-10	-29.3571
1716	1	Extremo 1A	-1.8E-09	43.99	-1.1E-08	0.299	5.3E-09	-50.2484
1716	0	Extremo 2A	-1.4E-08	35.161	-8.8E-08	0.2992	-4.5E-08	-10.6728
1716	0.5	Extremo 2A	-1.4E-08	39.576	-8.8E-08	0.2992	-1.3E-09	-29.357
1716	1	Extremo 2A	-1.4E-08	43.99	-8.8E-08	0.2992	4.3E-08	-50.2483
1718	0	Extremo 1A	-2.2E-09	-43.333	1.3E-08	1.1287	6.4E-09	-49.2846
1718	0.5	Extremo 1A	-2.2E-09	-38.919	1.3E-08	1.1287	-9.3E-11	-28.7216
1718	1	Extremo 1A	-2.2E-09	-34.505	1.3E-08	1.1287	-6.6E-09	-10.3656
1718	0	Extremo 2A	-2E-08	-43.333	1.2E-07	1.1284	5.8E-08	-49.2845
1718	0.5	Extremo 2A	-2E-08	-38.919	1.2E-07	1.1284	-7E-10	-28.7215
1718	1	Extremo 2A	-2E-08	-34.505	1.2E-07	1.1284	-5.9E-08	-10.3655
1719	0	Extremo 1A	-2.1E-10	-19.142	3.5E-09	0.1864	1.2E-09	-10.2561
1719	0.3	Extremo 1A	-2.1E-10	-17.056	3.5E-09	0.1864	2E-10	-4.8265
1719	0.6	Extremo 1A	-2.1E-10	-14.97	3.5E-09	0.1864	-8.4E-10	-0.0227
1719	0	Extremo 2A	-1.9E-09	-19.142	3.2E-08	0.1864	1.1E-08	-10.2561
1719	0.3	Extremo 2A	-1.9E-09	-17.056	3.2E-08	0.1864	1.9E-09	-4.8265
1719	0.6	Extremo 2A	-1.9E-09	-14.97	3.2E-08	0.1864	-7.6E-09	-0.0227
1720	0	Extremo 1A	-2.2E-10	15.224	-3.7E-09	0.4445	-9.1E-10	-0.0726
1720	0.3	Extremo 1A	-2.2E-10	17.31	-3.7E-09	0.4445	2E-10	-4.9526
1720	0.6	Extremo 1A	-2.2E-10	19.396	-3.7E-09	0.4445	1.3E-09	-10.4584
1720	0	Extremo 2A	-1.7E-09	15.224	-2.9E-08	0.4444	-7.3E-09	-0.0726
1720	0.3	Extremo 2A	-1.7E-09	17.31	-2.9E-08	0.4444	1.6E-09	-4.9526
1720	0.6	Extremo 2A	-1.7E-09	19.395	-2.9E-08	0.4444	1E-08	-10.4583
1721	0	Extremo 1A	-2.2E-09	35.33	-1.4E-08	0.6669	-7.1E-09	-10.9244
1721	0.5	Extremo 1A	-2.2E-09	39.744	-1.4E-08	0.6669	-1.7E-10	-29.6931
1721	1	Extremo 1A	-2.2E-09	44.158	-1.4E-08	0.6669	6.8E-09	-50.6688
1721	0	Extremo 2A	-1.8E-08	35.33	-1.1E-07	0.6669	-5.7E-08	-10.9242
1721	0.5	Extremo 2A	-1.8E-08	39.744	-1.1E-07	0.6669	-1.7E-09	-29.6928
1721	1	Extremo 2A	-1.8E-08	44.158	-1.1E-07	0.6669	5.4E-08	-50.6684
1723	0	Extremo 1A	-2.8E-09	-43.557	1.7E-08	1.1206	8.2E-09	-49.9698
1723	0.5	Extremo 1A	-2.8E-09	-39.143	1.7E-08	1.1206	-1.2E-10	-29.2947
1723	1	Extremo 1A	-2.8E-09	-34.729	1.7E-08	1.1206	-8.4E-09	-10.8265
1723	0	Extremo 2A	-2.5E-08	-43.557	1.5E-07	1.1205	7.4E-08	-49.9695
1723	0.5	Extremo 2A	-2.5E-08	-39.143	1.5E-07	1.1205	-8.6E-10	-29.2944
1723	1	Extremo 2A	-2.5E-08	-34.729	1.5E-07	1.1205	-7.6E-08	-10.8263
1724	0	Extremo 1A	-2.7E-10	-19.289	4.5E-09	0.0649	1.6E-09	-10.3927
1724	0.3	Extremo 1A	-2.7E-10	-17.203	4.5E-09	0.0649	2.6E-10	-4.9189
1724	0.6	Extremo 1A	-2.7E-10	-15.117	4.5E-09	0.0649	-1.1E-09	-0.0709
1724	0	Extremo 2A	-2.4E-09	-19.289	4.1E-08	0.065	1.5E-08	-10.3926
1724	0.3	Extremo 2A	-2.4E-09	-17.203	4.1E-08	0.065	2.4E-09	-4.9188
1724	0.6	Extremo 2A	-2.4E-09	-15.117	4.1E-08	0.065	-9.8E-09	-0.0708
1725	0	Extremo 1A	-2.8E-10	15.382	-4.7E-09	0.7566	-1.1E-09	-0.0795
1725	0.3	Extremo 1A	-2.8E-10	17.468	-4.7E-09	0.7566	2.6E-10	-5.0071
1725	0.6	Extremo 1A	-2.8E-10	19.554	-4.7E-09	0.7566	1.7E-09	-10.5604
1725	0	Extremo 2A	-2.1E-09	15.382	-3.7E-08	0.7564	-9.2E-09	-0.0794
1725	0.3	Extremo 2A	-2.1E-09	17.468	-3.7E-08	0.7564	2E-09	-5.007
1725	0.6	Extremo 2A	-2.1E-09	19.554	-3.7E-08	0.7564	1.3E-08	-10.5603
1726	0	Extremo 1A	-2.8E-09	36.047	-1.8E-08	1.4705	-9E-09	-11.14
1726	0.5	Extremo 1A	-2.8E-09	40.461	-1.8E-08	1.4705	-2.2E-10	-30.2669
1726	1	Extremo 1A	-2.8E-09	44.875	-1.8E-08	1.4705	8.6E-09	-51.6008
1726	0	Extremo 2A	-2.2E-08	36.046	-1.4E-07	1.4701	-7.2E-08	-11.1396

1726	0.5	Extremo 2A	-2.2E-08	40.46	-1.4E-07	1.4701	-2.2E-09	-30.2663
1726	1	Extremo 2A	-2.2E-08	44.874	-1.4E-07	1.4701	6.8E-08	-51.6
1728	0	Extremo 1A	-3.6E-09	-44.47	2.1E-08	0.3433	1.1E-08	-51.4247
1728	0.5	Extremo 1A	-3.6E-09	-40.056	2.1E-08	0.3433	-1.5E-10	-30.2932
1728	1	Extremo 1A	-3.6E-09	-35.642	2.1E-08	0.3433	-1.1E-08	-11.3687
1728	0	Extremo 2A	-3.2E-08	-44.47	1.9E-07	0.3435	9.5E-08	-51.424
1728	0.5	Extremo 2A	-3.2E-08	-40.056	1.9E-07	0.3435	-1E-09	-30.2926
1728	1	Extremo 2A	-3.2E-08	-35.642	1.9E-07	0.3435	-9.7E-08	-11.3683
1729	0	Extremo 1A	-3.5E-10	-19.556	5.8E-09	-0.2829	2.1E-09	-10.5923
1729	0.3	Extremo 1A	-3.5E-10	-17.47	5.8E-09	-0.2829	3.4E-10	-5.0385
1729	0.6	Extremo 1A	-3.5E-10	-15.384	5.8E-09	-0.2829	-1.4E-09	-0.1106
1729	0	Extremo 2A	-3.1E-09	-19.555	5.2E-08	-0.2827	1.9E-08	-10.5922
1729	0.3	Extremo 2A	-3.1E-09	-17.469	5.2E-08	-0.2827	3.1E-09	-5.0385
1729	0.6	Extremo 2A	-3.1E-09	-15.383	5.2E-08	-0.2827	-1.3E-08	-0.1105
1730	0	Extremo 1A	-3.4E-10	15.548	-5.9E-09	1.0497	-1.5E-09	-0.0075
1730	0.3	Extremo 1A	-3.4E-10	17.634	-5.9E-09	1.0497	3.2E-10	-4.9848
1730	0.6	Extremo 1A	-3.4E-10	19.72	-5.9E-09	1.0497	2.1E-09	-10.5879
1730	0	Extremo 2A	-2.7E-09	15.548	-4.7E-08	1.0493	-1.2E-08	-0.0074
1730	0.3	Extremo 2A	-2.7E-09	17.634	-4.7E-08	1.0493	2.4E-09	-4.9847
1730	0.6	Extremo 2A	-2.7E-09	19.72	-4.7E-08	1.0493	1.6E-08	-10.5878
1731	0	Extremo 1A	-3.6E-09	37.862	-2.2E-08	2.6918	-1.1E-08	-10.7707
1731	0.5	Extremo 1A	-3.6E-09	42.277	-2.2E-08	2.6918	-2.8E-10	-30.8055
1731	1	Extremo 1A	-3.6E-09	46.691	-2.2E-08	2.6918	1.1E-08	-53.0473
1731	0	Extremo 2A	-2.8E-08	37.861	-1.8E-07	2.6908	-9.1E-08	-10.7705
1731	0.5	Extremo 2A	-2.8E-08	42.275	-1.8E-07	2.6908	-2.8E-09	-30.8046
1731	1	Extremo 2A	-2.8E-08	46.689	-1.8E-07	2.6908	8.6E-08	-53.0458
1733	0	Extremo 1A	-4.6E-09	-46.98	2.7E-08	-1.407	1.4E-08	-53.8546
1733	0.5	Extremo 1A	-4.6E-09	-42.566	2.7E-08	-1.407	-1.9E-10	-31.4682
1733	1	Extremo 1A	-4.6E-09	-38.152	2.7E-08	-1.407	-1.4E-08	-11.2888
1733	0	Extremo 2A	-4.1E-08	-46.979	2.5E-07	-1.4061	1.2E-07	-53.853
1733	0.5	Extremo 2A	-4.1E-08	-42.565	2.5E-07	-1.4061	-1.3E-09	-31.4672
1733	1	Extremo 2A	-4.1E-08	-38.151	2.5E-07	-1.4061	-1.2E-07	-11.2884
1734	0	Extremo 1A	-4.4E-10	-19.889	7.4E-09	-0.7568	2.6E-09	-10.7397
1734	0.3	Extremo 1A	-4.4E-10	-17.803	7.4E-09	-0.7568	4.3E-10	-5.0859
1734	0.6	Extremo 1A	-4.4E-10	-15.717	7.4E-09	-0.7568	-1.8E-09	-0.0578
1734	0	Extremo 2A	-4E-09	-19.889	6.7E-08	-0.7564	2.4E-08	-10.7395
1734	0.3	Extremo 2A	-4E-09	-17.803	6.7E-08	-0.7564	4E-09	-5.0858
1734	0.6	Extremo 2A	-4E-09	-15.717	6.7E-08	-0.7564	-1.6E-08	-0.0578
1735	0	Extremo 1A	-4.3E-10	15.502	-7.5E-09	0.8971	-1.8E-09	0.1568
1735	0.3	Extremo 1A	-4.3E-10	17.588	-7.5E-09	0.8971	4.1E-10	-4.8067
1735	0.6	Extremo 1A	-4.3E-10	19.674	-7.5E-09	0.8971	2.7E-09	-10.396
1735	0	Extremo 2A	-3.4E-09	15.502	-5.9E-08	0.8968	-1.5E-08	0.1567
1735	0.3	Extremo 2A	-3.4E-09	17.588	-5.9E-08	0.8968	3.1E-09	-4.8067
1735	0.6	Extremo 2A	-3.4E-09	19.674	-5.9E-08	0.8968	2.1E-08	-10.3959
1736	0	Extremo 1A	-4.5E-09	40.049	-2.8E-08	3.0374	-1.4E-08	-9.3398
1736	0.5	Extremo 1A	-4.5E-09	44.463	-2.8E-08	3.0374	-3.6E-10	-30.4677
1736	1	Extremo 1A	-4.5E-09	48.877	-2.8E-08	3.0374	1.4E-08	-53.8026
1736	0	Extremo 2A	-3.5E-08	40.047	-2.2E-07	3.0361	-1.2E-07	-9.3401
1736	0.5	Extremo 2A	-3.5E-08	44.461	-2.2E-07	3.0361	-3.7E-09	-30.4669
1736	1	Extremo 2A	-3.5E-08	48.875	-2.2E-07	3.0361	1.1E-07	-53.8007
1738	0	Extremo 1A	-5.8E-09	-50.553	3.5E-08	-2.6955	1.7E-08	-55.8924
1738	0.5	Extremo 1A	-5.8E-09	-46.138	3.5E-08	-2.6955	-2.4E-10	-31.7197
1738	1	Extremo 1A	-5.8E-09	-41.724	3.5E-08	-2.6955	-1.8E-08	-9.754
1738	0	Extremo 2A	-5.3E-08	-50.55	3.2E-07	-2.6941	1.6E-07	-55.8902
1738	0.5	Extremo 2A	-5.3E-08	-46.136	3.2E-07	-2.6941	-1.5E-09	-31.7187
1738	1	Extremo 2A	-5.3E-08	-41.722	3.2E-07	-2.6941	-1.6E-07	-9.7542
1739	0	Extremo 1A	-5.6E-10	-19.999	9.5E-09	-0.826	3.4E-09	-10.6168
1739	0.3	Extremo 1A	-5.6E-10	-17.913	9.5E-09	-0.826	5.5E-10	-4.9299
1739	0.6	Extremo 1A	-5.6E-10	-15.827	9.5E-09	-0.826	-2.3E-09	0.1312
1739	0	Extremo 2A	-5.1E-09	-19.999	8.5E-08	-0.8256	3.1E-08	-10.6167
1739	0.3	Extremo 2A	-5.1E-09	-17.913	8.5E-08	-0.8256	5.1E-09	-4.9299
1739	0.6	Extremo 2A	-5.1E-09	-15.827	8.5E-08	-0.8256	-2.1E-08	0.1311
1740	0	Extremo 1A	-5.4E-10	15.276	-9.5E-09	2E-05	-2.3E-09	0.2159
1740	0.3	Extremo 1A	-5.4E-10	17.362	-9.5E-09	2E-05	5.1E-10	-4.6797
1740	0.6	Extremo 1A	-5.4E-10	19.447	-9.5E-09	2E-05	3.4E-09	-10.201
1740	0	Extremo 2A	-4.2E-09	15.275	-7.4E-08	1.5E-05	-1.8E-08	0.2158
1740	0.3	Extremo 2A	-4.2E-09	17.361	-7.4E-08	1.5E-05	3.8E-09	-4.6797
1740	0.6	Extremo 2A	-4.2E-09	19.447	-7.4E-08	1.5E-05	2.6E-08	-10.201
1741	0	Extremo 1A	-5.7E-09	38.964	-3.6E-08	0.00037	-1.8E-08	-8.5872
1741	0.5	Extremo 1A	-5.7E-09	43.378	-3.6E-08	0.00037	-4.7E-10	-29.1727
1741	1	Extremo 1A	-5.7E-09	47.792	-3.6E-08	0.00037	1.7E-08	-51.9651
1741	0	Extremo 2A	-4.4E-08	38.962	-2.8E-07	0.00016	-1.5E-07	-8.5878
1741	0.5	Extremo 2A	-4.4E-08	43.376	-2.8E-07	0.00016	-4.8E-09	-29.1724
1741	1	Extremo 2A	-4.4E-08	47.79	-2.8E-07	0.00016	1.4E-07	-51.964
1743	0	Extremo 1A	-7.5E-09	-49.965	4.5E-08	-0.00055	2.2E-08	-54.3765
1743	0.5	Extremo 1A	-7.5E-09	-45.551	4.5E-08	-0.00055	-3.1E-10	-30.4973
1743	1	Extremo 1A	-7.5E-09	-41.137	4.5E-08	-0.00055	-2.3E-08	-8.8253
1743	0	Extremo 2A	-6.8E-08	-49.963	4E-07	-0.00018	2E-07	-54.3748
1743	0.5	Extremo 2A	-6.8E-08	-45.549	4E-07	-0.00018	-1.9E-09	-30.4968
1743	1	Extremo 2A	-6.8E-08	-41.135	4E-07	-0.00018	-2E-07	-8.8258
1744	0	Extremo 1A	-7.2E-10	-19.805	1.2E-08	-0.0001	4.3E-09	-10.4212
1744	0.3	Extremo 1A	-7.2E-10	-17.719	1.2E-08	-0.0001	7.1E-10	-4.7925
1744	0.6	Extremo 1A	-7.2E-10	-15.633	1.2E-08	-0.0001	-2.9E-09	0.2104
1744	0	Extremo 2A	-6.5E-09	-19.805	1.1E-07	-3E-05	3.9E-08	-10.4212
1744	0.3	Extremo 2A	-6.5E-09	-17.719	1.1E-07	-3E-05	6.6E-09	-4.7925
1744	0.6	Extremo 2A	-6.5E-09	-15.633	1.1E-07	-3E-05	-2.6E-08	0.2103
1745	0	Extremo 1A	-6.9E-10	15.502	-1.2E-08	-0.8971	-2.9E-09	0.1568
1745	0.3	Extremo 1A	-6.9E-10	17.588	-1.2E-08	-0.8971	6.5E-10	-4.8067
1745	0.6	Extremo 1A	-6.9E-10	19.674	-1.2E-08	-0.8971	4.2E-09	-10.396
1745	0	Extremo 2A	-5.3E-09	15.502	-9.3E-08	-0.8967	-2.3E-08	0.1567
1745	0.3	Extremo 2A	-5.3E-09	17.588	-9.3E-08	-0.8967	4.8E-09	-4.8067
1745	0.6	Extremo 2A	-5.3E-09	19.674	-9.3E-08	-0.8967	3.3E-08	-10.3959
1746	0	Extremo 1A	-7.2E-09	40.049	-4.5E-08	-3.0366	-2.3E-08	-9.3398
1746	0.5	Extremo 1A	-7.2E-09	44.463	-4.5E-08	-3.0366	-6E-10	-30.4677
1746	1	Extremo 1A	-7.2E-09	48.877	-4.5E-08	-3.0366	2.2E-08	-53.8026
1746	0	Extremo 2A	-5.5E-08	40.047	-3.5E-07	-3.0358	-1.8E-07	-9.3401
1746	0.5	Extremo 2A	-5.5E-08	44.461	-3.5E-07	-3.0358	-6.3E-09	-30.4669
1746	1	Extremo 2A	-5.5E-08	48.875	-3.5E-07	-3.0358	1.7E-07	-53.8007
1748	0	Extremo 1A	-9.6E-09	-50.553	5.8E-08	2.6944	2.8E-08	-55.8924
1748	0.5	Extremo 1A	-9.6E-09	-46.138	5.8E-08	2.6944	-3.8E-10	-31.7197
1748	1	Extremo 1A	-9.6E-09	-41.724	5.8E-08	2.6944	-2.9E-08	-9.754
1748	0	Extremo 2A	-8.7E-08	-50.55	5.2E-07	2.6938	2.6E-07	-55.8902
1748	0.5	Extremo 2A	-8.7E-08	-46.136	5.2E-07	2.6938	-2.2E-09	-31.7187
1748	1	Extremo 2A	-8.7E-08	-41.722	5.2E-07	2.6938	-2.6E-07	-9.7542
1749	0	Extremo 1A	-9.3E-10	-19.999	1.6E-08	0.8258	5.6E-09	-10.6168
1749	0.3	Extremo 1A	-9.3E-10	-17.913	1.6E-08	0.8258	9.1E-10	-4.9299
1749	0.6	Extremo 1A	-9.3E-10	-15.827	1.6E-08	0.8258	-3.7E-09	0.1312
1749	0	Extremo 2A	-8.4E-09	-19.999	1.4E-07	0.8256	5.1E-08	-10.6167
1749	0.3	Extremo 2A	-8.4E-09	-17.913	1.4E-07	0.8256	8.4E-09	-4.9299
1749	0.6	Extremo 2A	-8.4E-09	-15.827	1.4E-07	0.8256	-3.4E-08	0.1311
1750	0	Extremo 1A	-8.6E-10	15.548	-1.5E-08	-1.0496	-3.7E-09	-0.0075
1750	0.3	Extremo 1A	-8.6E-10	17.634	-1.5E-08	-1.0496	8.1E-10	-4.9848
1750	0.6	Extremo 1A	-8.6E-10	19.72	-1.5E-08	-1.0496	5.4E-09	-10.5879
1750	0	Extremo 2A	-6.6E-09	15.548	-1.2E-07	-1.0493	-2.9E-08	-0.0074
1750	0.3	Extremo 2A	-6.6E-09	17.634	-1.2E-07	-1.0493	5.9E-09	-4.9847
1750	0.6	Extremo 2A	-6.6E-09	19.72	-1.2E-07	-1.0493	4.1E-08	-10.5878
1751	0	Extremo 1A	-9.1E-09	37.862	-5.7E-08	-2.691	-2.9E-08	-10.7707
1751	0.5	Extremo 1A	-9.1E-09	42.277	-5.7E-08	-2.691	-7.8E-10	-30.8055
1751	1	Extremo 1A	-9.1E-09	46.691	-5.7E-08	-2.691	2.8E-08	-53.0473
1751	0	Extremo 2A	-6.9E-08	37.861	-4.4E-07	-2.6904	-2.3E-07	-10.7705
1751	0.5	Extremo 2A	-6.9E-08	42.275	-4.4E-07	-2.6904	-8.3E-09	-30.8046
1751	1	Extremo 2A	-6.9E-08	46.689	-4.4E-07	-2.6904	2.1E-07	-53.0458
1753	0	Extremo 1A	-1.2E-08	-46.98	7.4E-08	1.4059	3.6E-08	-53.8546
1753	0.5	Extremo 1A	-1.2E-08	-42.566	7.4E-08	1.4059	-4.8E-10	-31.4682
1753	1	Extremo 1A	-1.2E-08	-38.152	7.4E-08	1.4059	-3.7E-08	-11.2888
1753	0	Extremo 2A	-1.1E-07	-46.979	6.7E-07	1.4057	3.3E-07	-53.853
1753	0.5	Extremo 2A	-1.1E-07	-42.565	6.7E-07	1.4057	-2.6E-09	-31.4672
1753	1	Extremo 2A	-1.1E-07	-38.151	6.7E-07	1.4057	-3.4E-07	-11.2884
1754	0	Extremo 1A	-1.2E-09	-19.889	2E-08	0.7566	7.1E-09	-10.7397
1754	0.3	Extremo 1A	-1.2E-09	-17.803	2E-08	0.7566	1.2E-09	-5.0859
1754	0.6	Extremo 1A	-1.2E-09	-15.717	2E-08	0.7566	-4.8E-09	-0.0578
1754	0	Extremo 2A	-1.1E-08	-19.889	1.8E-07	0.7563	6.5E-08	-10.7395
1754	0.3	Extremo 2A	-1.1E-08	-17.803	1.8E-07	0.7563	1.1E-08	-5.0858
1754	0.6	Extremo 2A	-1.1E-08	-15.717	1.8E-07	0.7563	-4.3E-08	-0.0578
1755	0	Extremo 1A	-1.1E-09	15.382	-1.9E-08	-0.7566	-4.7E-09	-0.0795
1755	0.3	Extremo 1A	-1.1E-09	17.468	-1.9E-08	-0.7566	1E-09	-5.0071
1755	0.6	Extremo 1A	-1.1E-09	19.554	-1.9E-08	-0.7566	6.8E-09	-10.5604
1755	0	Extremo 2A	-8.3E-09	15.382	-1.5E-07	-0.7564	-3.7E-08	-0.0794
1755	0.3	Extremo 2A	-8.3E-09	17.468	-1.5E-07	-0.7564	7.4E-09	-5.007
1755	0.6	Extremo 2A	-8.3E-09	19.554	-1.5E-07	-0.7564	5.1E-08	-10.5603
1756	0	Extremo 1A	-1.1E-08	36.047	-7.2E-08	-1.4698	-3.7E-08	-11.14
1756	0.5	Extremo 1A	-1.1E-08	40.461	-7.2E-08	-1.4698	-1E-09	-30.2669
1756	1	Extremo 1A	-1.1E-08	44.875	-7.2E-08	-1.4698	3.5E-08	-51.6008
1756	0	Extremo 2A	-8.7E-08	36.046	-5.6E-07	-1.4698	-2.9E-07	-11.1396

1756	0.5	Extremo 2A	-8.7E-08	40.46	-5.6E-07	-1.4698	-1.1E-08	-30.2663
1756	1	Extremo 2A	-8.7E-08	44.874	-5.6E-07	-1.4698	2.7E-07	-51.6
1758	0	Extremo 1A	-1.6E-08	-44.47	9.4E-08	-0.3444	4.7E-08	-51.4248
1758	0.5	Extremo 1A	-1.6E-08	-40.056	9.4E-08	-0.3444	-5.9E-10	-30.2932
1758	1	Extremo 1A	-1.6E-08	-35.642	9.4E-08	-0.3444	-4.8E-08	-11.3687
1758	0	Extremo 2A	-1.4E-07	-44.47	8.5E-07	-0.3439	4.2E-07	-51.424
1758	0.5	Extremo 2A	-1.4E-07	-40.056	8.5E-07	-0.3439	-3.1E-09	-30.2926
1758	1	Extremo 2A	-1.4E-07	-35.642	8.5E-07	-0.3439	-4.3E-07	-11.3683
1759	0	Extremo 1A	-1.5E-09	-19.556	2.5E-08	0.2827	9.1E-09	-10.5923
1759	0.3	Extremo 1A	-1.5E-09	-17.47	2.5E-08	0.2827	1.5E-09	-5.0385
1759	0.6	Extremo 1A	-1.5E-09	-15.384	2.5E-08	0.2827	-6.1E-09	-0.1106
1759	0	Extremo 2A	-1.4E-08	-19.555	2.3E-07	0.2826	8.4E-08	-10.5922
1759	0.3	Extremo 2A	-1.4E-08	-17.469	2.3E-07	0.2826	1.4E-08	-5.0385
1759	0.6	Extremo 2A	-1.4E-08	-15.383	2.3E-07	0.2826	-5.6E-08	-0.1105
1760	0	Extremo 1A	-1.4E-09	15.224	-2.4E-08	-0.4445	-5.9E-09	-0.0726
1760	0.3	Extremo 1A	-1.4E-09	17.31	-2.4E-08	-0.4445	1.3E-09	-4.9526
1760	0.6	Extremo 1A	-1.4E-09	19.396	-2.4E-08	-0.4445	8.5E-09	-10.4584
1760	0	Extremo 2A	-1E-08	15.224	-1.8E-07	-0.4444	-4.6E-08	-0.0726
1760	0.3	Extremo 2A	-1E-08	17.31	-1.8E-07	-0.4444	9.1E-09	-4.9526
1760	0.6	Extremo 2A	-1E-08	19.395	-1.8E-07	-0.4444	6.4E-08	-10.4583
1761	0	Extremo 1A	-1.4E-08	35.33	-9.1E-08	-0.6661	-4.7E-08	-10.9244
1761	0.5	Extremo 1A	-1.4E-08	39.744	-9.1E-08	-0.6661	-1.3E-09	-29.6931
1761	1	Extremo 1A	-1.4E-08	44.158	-9.1E-08	-0.6661	4.4E-08	-50.6688
1761	0	Extremo 2A	-1.1E-07	35.33	-7E-07	-0.6666	-3.6E-07	-10.9242
1761	0.5	Extremo 2A	-1.1E-07	39.744	-7E-07	-0.6666	-1.4E-08	-29.6928
1761	1	Extremo 2A	-1.1E-07	44.158	-7E-07	-0.6666	3.4E-07	-50.6684
1763	0	Extremo 1A	-2E-08	-43.557	1.2E-07	-1.1217	6E-08	-49.9698
1763	0.5	Extremo 1A	-2E-08	-39.143	1.2E-07	-1.1217	-7.3E-10	-29.2947
1763	1	Extremo 1A	-2E-08	-34.729	1.2E-07	-1.1217	-6.1E-08	-10.8265
1763	0	Extremo 2A	-1.8E-07	-43.557	1.1E-06	-1.1208	5.4E-07	-49.9695
1763	0.5	Extremo 2A	-1.8E-07	-39.143	1.1E-06	-1.1208	-3.5E-09	-29.2944
1763	1	Extremo 2A	-1.8E-07	-34.729	1.1E-06	-1.1208	-5.5E-07	-10.8263
1764	0	Extremo 1A	-1.9E-09	-19.289	3.3E-08	-0.0651	1.2E-08	-10.3927
1764	0.3	Extremo 1A	-1.9E-09	-17.203	3.3E-08	-0.0651	1.9E-09	-4.9189
1764	0.6	Extremo 1A	-1.9E-09	-15.117	3.3E-08	-0.0651	-7.9E-09	-0.0709
1764	0	Extremo 2A	-1.8E-08	-19.289	3E-07	-0.065	1.1E-07	-10.3926
1764	0.3	Extremo 2A	-1.8E-08	-17.203	3E-07	-0.065	1.8E-08	-4.9188
1764	0.6	Extremo 2A	-1.8E-08	-15.117	3E-07	-0.065	-7.1E-08	-0.0708
1765	0	Extremo 1A	-1.8E-09	15.135	-3E-08	-0.2404	-7.5E-09	-0.0483
1765	0.3	Extremo 1A	-1.8E-09	17.221	-3E-08	-0.2404	1.6E-09	-4.9017
1765	0.6	Extremo 1A	-1.8E-09	19.307	-3E-08	-0.2404	1.1E-08	-10.3808
1765	0	Extremo 2A	-1.3E-08	15.135	-2.3E-07	-0.2404	-5.7E-08	-0.0483
1765	0.3	Extremo 2A	-1.3E-08	17.221	-2.3E-07	-0.2404	1.1E-08	-4.9016
1765	0.6	Extremo 2A	-1.3E-08	19.307	-2.3E-07	-0.2404	8E-08	-10.3807
1766	0	Extremo 1A	-1.8E-08	35.161	-1.2E-07	-0.2982	-5.9E-08	-10.6729
1766	0.5	Extremo 1A	-1.8E-08	39.576	-1.2E-07	-0.2982	-1.7E-09	-29.3572
1766	1	Extremo 1A	-1.8E-08	43.99	-1.2E-07	-0.2982	5.6E-08	-50.2485
1766	0	Extremo 2A	-1.4E-07	35.161	-8.8E-07	-0.2989	-4.6E-07	-10.6728
1766	0.5	Extremo 2A	-1.4E-07	39.576	-8.8E-07	-0.2989	-1.9E-08	-29.357
1766	1	Extremo 2A	-1.4E-07	43.99	-8.8E-07	-0.2989	4.2E-07	-50.2483
1768	0	Extremo 1A	-2.6E-08	-43.333	1.5E-07	-1.1298	7.6E-08	-49.2846
1768	0.5	Extremo 1A	-2.6E-08	-38.919	1.5E-07	-1.1298	-9E-10	-28.7216
1768	1	Extremo 1A	-2.6E-08	-34.505	1.5E-07	-1.1298	-7.8E-08	-10.3656
1768	0	Extremo 2A	-2.4E-07	-43.333	1.4E-06	-1.1288	7E-07	-49.2845
1768	0.5	Extremo 2A	-2.4E-07	-38.919	1.4E-06	-1.1288	-4E-09	-28.7215
1768	1	Extremo 2A	-2.4E-07	-34.505	1.4E-06	-1.1288	-7.1E-07	-10.3655
1769	0	Extremo 1A	-2.5E-09	-19.142	4.2E-08	-0.1867	1.5E-08	-10.2561
1769	0.3	Extremo 1A	-2.5E-09	-17.056	4.2E-08	-0.1867	2.5E-09	-4.8265
1769	0.6	Extremo 1A	-2.5E-09	-14.97	4.2E-08	-0.1867	-1E-08	-0.0227
1769	0	Extremo 2A	-2.3E-08	-19.142	3.8E-07	-0.1865	1.4E-07	-10.2561
1769	0.3	Extremo 2A	-2.3E-08	-17.056	3.8E-07	-0.1865	2.3E-08	-4.8265
1769	0.6	Extremo 2A	-2.3E-08	-14.97	3.8E-07	-0.1865	-9.2E-08	-0.0227
1770	0	Extremo 1A	-2.2E-09	15.097	-3.8E-08	-0.119	-9.5E-09	-0.0318
1770	0.3	Extremo 1A	-2.2E-09	17.183	-3.8E-08	-0.119	2E-09	-4.8738
1770	0.6	Extremo 1A	-2.2E-09	19.269	-3.8E-08	-0.119	1.4E-08	-10.3416
1770	0	Extremo 2A	-1.6E-08	15.097	-2.9E-07	-0.119	-7.2E-08	-0.0318
1770	0.3	Extremo 2A	-1.6E-08	17.183	-2.9E-07	-0.119	1.4E-08	-4.8738
1770	0.6	Extremo 2A	-1.6E-08	19.269	-2.9E-07	-0.119	1E-07	-10.3416
1771	0	Extremo 1A	-2.3E-08	35.153	-1.5E-07	-0.1367	-7.5E-08	-10.5323
1771	0.5	Extremo 1A	-2.3E-08	39.567	-1.5E-07	-0.1367	-2.2E-09	-29.2121
1771	1	Extremo 1A	-2.3E-08	43.981	-1.5E-07	-0.1367	7E-08	-50.0989
1771	0	Extremo 2A	-1.7E-07	35.153	-1.1E-06	-0.1374	-5.7E-07	-10.5323
1771	0.5	Extremo 2A	-1.7E-07	39.567	-1.1E-06	-0.1374	-2.4E-08	-29.212
1771	1	Extremo 2A	-1.7E-07	43.981	-1.1E-06	-0.1374	5.3E-07	-50.0988
1773	0	Extremo 1A	-3.3E-08	-43.294	2E-07	-0.7688	9.8E-08	-48.9977
1773	0.5	Extremo 1A	-3.3E-08	-38.88	2E-07	-0.7688	-1.1E-09	-28.4539
1773	1	Extremo 1A	-3.3E-08	-34.466	2E-07	-0.7688	-1E-07	-10.1172
1773	0	Extremo 2A	-3E-07	-43.294	1.8E-06	-0.7677	9E-07	-48.9976
1773	0.5	Extremo 2A	-3E-07	-38.88	1.8E-06	-0.7677	-4.4E-09	-28.4539
1773	1	Extremo 2A	-3E-07	-34.466	1.8E-06	-0.7677	-9.1E-07	-10.1172
1774	0	Extremo 1A	-3.2E-09	-19.074	5.4E-08	-0.1582	1.9E-08	-10.1861
1774	0.3	Extremo 1A	-3.2E-09	-16.988	5.4E-08	-0.1582	3.2E-09	-4.7768
1774	0.6	Extremo 1A	-3.2E-09	-14.902	5.4E-08	-0.1582	-1.3E-08	0.0067
1774	0	Extremo 2A	-3E-08	-19.074	4.9E-07	-0.158	1.8E-07	-10.1861
1774	0.3	Extremo 2A	-3E-08	-16.988	4.9E-07	-0.158	3E-08	-4.7768
1774	0.6	Extremo 2A	-3E-08	-14.902	4.9E-07	-0.158	-1.2E-07	0.0067
1775	0	Extremo 1A	-2.8E-09	15.085	-4.8E-08	-0.0362	-1.2E-08	-0.0249
1775	0.3	Extremo 1A	-2.8E-09	17.171	-4.8E-08	-0.0362	2.5E-09	-4.8633
1775	0.6	Extremo 1A	-2.8E-09	19.257	-4.8E-08	-0.0362	1.7E-08	-10.3274
1775	0	Extremo 2A	-2E-08	15.085	-3.6E-07	-0.0363	-9E-08	-0.0249
1775	0.3	Extremo 2A	-2E-08	17.171	-3.6E-07	-0.0363	1.7E-08	-4.8633
1775	0.6	Extremo 2A	-2E-08	19.257	-3.6E-07	-0.0363	1.2E-07	-10.3274
1776	0	Extremo 1A	-2.9E-08	35.165	-1.8E-07	-0.0407	-9.4E-08	-10.4793
1776	0.5	Extremo 1A	-2.9E-08	39.579	-1.8E-07	-0.0407	-2.9E-09	-29.1652
1776	1	Extremo 1A	-2.9E-08	43.993	-1.8E-07	-0.0407	8.9E-08	-50.0582
1776	0	Extremo 2A	-2.1E-07	35.165	-1.4E-06	-0.0415	-7.2E-07	-10.4793
1776	0.5	Extremo 2A	-2.1E-07	39.579	-1.4E-06	-0.0415	-3.2E-08	-29.1652
1776	1	Extremo 2A	-2.1E-07	43.993	-1.4E-06	-0.0415	6.6E-07	-50.0582
1778	0	Extremo 1A	-4.2E-08	-43.29	2.5E-07	-0.2686	1.3E-07	-48.8961
1778	0.5	Extremo 1A	-4.2E-08	-38.876	2.5E-07	-0.2686	-1.3E-09	-28.3545
1778	1	Extremo 1A	-4.2E-08	-34.462	2.5E-07	-0.2686	-1.3E-07	-10.0199
1778	0	Extremo 2A	-3.9E-07	-43.29	2.3E-06	-0.2675	1.2E-06	-48.8961
1778	0.5	Extremo 2A	-3.9E-07	-38.876	2.3E-06	-0.2675	-4.7E-09	-28.3545
1778	1	Extremo 2A	-3.9E-07	-34.462	2.3E-06	-0.2675	-1.2E-06	-10.0199
1779	0	Extremo 1A	-4.1E-09	-19.049	6.9E-08	-0.0594	2.5E-08	-10.1588
1779	0.3	Extremo 1A	-4.1E-09	-16.963	6.9E-08	-0.0594	4.1E-09	-4.7571
1779	0.6	Extremo 1A	-4.1E-09	-14.877	6.9E-08	-0.0594	-1.7E-08	0.0189
1779	0	Extremo 2A	-3.8E-08	-19.049	6.3E-07	-0.0592	2.3E-07	-10.1588
1779	0.3	Extremo 2A	-3.8E-08	-16.963	6.3E-07	-0.0592	3.9E-08	-4.7571
1779	0.6	Extremo 2A	-3.8E-08	-14.877	6.3E-07	-0.0592	-1.5E-07	0.0189
1780	0	Extremo 1A	-3.5E-09	15.085	-6.1E-08	0.0364	-1.5E-08	-0.0249
1780	0.3	Extremo 1A	-3.5E-09	17.171	-6.1E-08	0.0364	3.2E-09	-4.8632
1780	0.6	Extremo 1A	-3.5E-09	19.257	-6.1E-08	0.0364	2.1E-08	-10.3273
1780	0	Extremo 2A	-2.5E-08	15.085	-4.5E-07	0.0363	-1.1E-07	-0.0249
1780	0.3	Extremo 2A	-2.5E-08	17.171	-4.5E-07	0.0363	2.1E-08	-4.8633
1780	0.6	Extremo 2A	-2.5E-08	19.257	-4.5E-07	0.0363	1.5E-07	-10.3273
1781	0	Extremo 1A	-3.6E-08	35.165	-2.3E-07	0.043	-1.2E-07	-10.4792
1781	0.5	Extremo 1A	-3.6E-08	39.579	-2.3E-07	0.043	-3.8E-09	-29.1652
1781	1	Extremo 1A	-3.6E-08	43.993	-2.3E-07	0.043	1.1E-07	-50.0582
1781	0	Extremo 2A	-2.6E-07	35.165	-1.7E-06	0.0423	-9E-07	-10.4792
1781	0.5	Extremo 2A	-2.6E-07	39.579	-1.7E-06	0.0423	-4.2E-08	-29.1652
1781	1	Extremo 2A	-2.6E-07	43.993	-1.7E-06	0.0423	8.2E-07	-50.0581
1783	0	Extremo 1A	-5.4E-08	-43.29	3.3E-07	0.2654	1.6E-07	-48.8961
1783	0.5	Extremo 1A	-5.4E-08	-38.876	3.3E-07	0.2654	-1.6E-09	-28.3545
1783	1	Extremo 1A	-5.4E-08	-34.462	3.3E-07	0.2654	-1.6E-07	-10.0198
1783	0	Extremo 2A	-5E-07	-43.29	3E-06	0.2665	1.5E-06	-48.8961
1783	0.5	Extremo 2A	-5E-07	-38.876	3E-06	0.2665	-4.7E-09	-28.3545
1783	1	Extremo 2A	-5E-07	-34.462	3E-06	0.2665	-1.5E-06	-10.0199
1784	0	Extremo 1A	-5.2E-09	-19.049	8.8E-08	0.0588	3.2E-08	-10.1588
1784	0.3	Extremo 1A	-5.2E-09	-16.963	8.8E-08	0.0588	5.2E-09	-4.7571
1784	0.6	Extremo 1A	-5.2E-09	-14.877	8.8E-08	0.0588	-2.1E-08	0.0189
1784	0	Extremo 2A	-4.9E-08	-19.049	8.1E-07	0.059	2.9E-07	-10.1588
1784	0.3	Extremo 2A	-4.9E-08	-16.963	8.1E-07	0.059	5E-08	-4.7571
1784	0.6	Extremo 2A	-4.9E-08	-14.877	8.1E-07	0.059	-1.9E-07	0.0189
1785	0	Extremo 1A	-4.4E-09	15.097	-7.7E-08	0.1191	-1.9E-08	-0.0318
1785	0.3	Extremo 1A	-4.4E-09	17.183	-7.7E-08	0.1191	4E-09	-4.8738
1785	0.6	Extremo 1A	-4.4E-09	19.269	-7.7E-08	0.1191	2.7E-08	-10.3415
1785	0	Extremo 2A	-3.1E-08	15.097	-5.5E-07	0.1191	-1.4E-07	-0.0318
1785	0.3	Extremo 2A	-3.1E-08	17.183	-5.5E-07	0.1191	2.6E-08	-4.8738
1785	0.6	Extremo 2A	-3.1E-08	19.269	-5.5E-07	0.1191	1.9E-07	-10.3416
1786	0	Extremo 1A	-4.6E-08	35.153	-2.9E-07	0.139	-1.5E-07	-10.532
1786	0.5	Extremo 1A	-4.6E-08	39.567	-2.9E-07	0.139	-4.9E-09	-29.2118
1786	1	Extremo 1A	-4.6E-08	43.981	-2.9E-07	0.139	1.4E-07	-50.0986
1786	0	Extremo 2A	-3.2E-07	35.153	-2.1E-06	0.1382	-1.1E-06	-10.5321

1786	0.5	Extremo 2A	-3.2E-07	39.567	-2.1E-06	0.1382	-5.6E-08	-29.2119
1786	1	Extremo 2A	-3.2E-07	43.981	-2.1E-06	0.1382	1E-06	-50.0987
1788	0	Extremo 1A	-7E-08	-43.295	4.2E-07	0.7656	2.1E-07	-48.9975
1788	0.5	Extremo 1A	-7E-08	-38.881	4.2E-07	0.7656	-2E-09	-28.4537
1788	1	Extremo 1A	-7E-08	-34.466	4.2E-07	0.7656	-2.1E-07	-10.117
1788	0	Extremo 2A	-6.5E-07	-43.295	3.8E-06	0.7667	1.9E-06	-48.9976
1788	0.5	Extremo 2A	-6.5E-07	-38.88	3.8E-06	0.7667	-4.3E-09	-28.4538
1788	1	Extremo 2A	-6.5E-07	-34.466	3.8E-06	0.7667	-1.9E-06	-10.1171
1789	0	Extremo 1A	-6.7E-09	-19.074	1.1E-07	0.1577	4.1E-08	-10.186
1789	0.3	Extremo 1A	-6.7E-09	-16.988	1.1E-07	0.1577	6.7E-09	-4.7768
1789	0.6	Extremo 1A	-6.7E-09	-14.902	1.1E-07	0.1577	-2.7E-08	0.0067
1789	0	Extremo 2A	-6.3E-08	-19.074	1E-06	0.1578	3.8E-07	-10.1861
1789	0.3	Extremo 2A	-6.3E-08	-16.988	1E-06	0.1578	6.5E-08	-4.7768
1789	0.6	Extremo 2A	-6.3E-08	-14.902	1E-06	0.1578	-2.5E-07	0.0067
1790	0	Extremo 1A	-5.5E-09	15.135	-9.6E-08	0.2403	-2.4E-08	-0.0482
1790	0.3	Extremo 1A	-5.5E-09	17.22	-9.6E-08	0.2403	4.9E-09	-4.9015
1790	0.6	Extremo 1A	-5.5E-09	19.306	-9.6E-08	0.2403	3.4E-08	-10.3805
1790	0	Extremo 2A	-3.8E-08	15.135	-6.9E-07	0.2404	-1.8E-07	-0.0483
1790	0.3	Extremo 2A	-3.8E-08	17.221	-6.9E-07	0.2404	3.1E-08	-4.9016
1790	0.6	Extremo 2A	-3.8E-08	19.307	-6.9E-07	0.2404	2.4E-07	-10.3806
1791	0	Extremo 1A	-5.7E-08	35.161	-3.7E-07	0.3001	-1.9E-07	-10.672
1791	0.5	Extremo 1A	-5.7E-08	39.575	-3.7E-07	0.3001	-6.5E-09	-29.3562
1791	1	Extremo 1A	-5.7E-08	43.99	-3.7E-07	0.3001	1.8E-07	-50.2475
1791	0	Extremo 2A	-4E-07	35.161	-2.7E-06	0.2994	-1.4E-06	-10.6724
1791	0.5	Extremo 2A	-4E-07	39.575	-2.7E-06	0.2994	-7.3E-08	-29.3567
1791	1	Extremo 2A	-4E-07	43.99	-2.7E-06	0.2994	1.3E-06	-50.2479
1793	0	Extremo 1A	-8.9E-08	-43.333	5.3E-07	1.1269	2.6E-07	-49.284
1793	0.5	Extremo 1A	-8.9E-08	-38.919	5.3E-07	1.1269	-2.3E-09	-28.7209
1793	1	Extremo 1A	-8.9E-08	-34.505	5.3E-07	1.1269	-2.7E-07	-10.3648
1793	0	Extremo 2A	-8.4E-07	-43.333	5E-06	1.1279	2.5E-06	-49.2844
1793	0.5	Extremo 2A	-8.4E-07	-38.919	5E-06	1.1279	-3.2E-09	-28.7213
1793	1	Extremo 2A	-8.4E-07	-34.505	5E-06	1.1279	-2.5E-06	-10.3653
1794	0	Extremo 1A	-8.7E-09	-19.141	1.4E-07	0.1863	5.2E-08	-10.2559
1794	0.3	Extremo 1A	-8.7E-09	-17.055	1.4E-07	0.1863	8.7E-09	-4.8263
1794	0.6	Extremo 1A	-8.7E-09	-14.97	1.4E-07	0.1863	-3.5E-08	-0.0226
1794	0	Extremo 2A	-8.1E-08	-19.142	1.4E-06	0.1864	4.9E-07	-10.256
1794	0.3	Extremo 2A	-8.1E-08	-17.056	1.4E-06	0.1864	8.4E-08	-4.8264
1794	0.6	Extremo 2A	-8.1E-08	-14.97	1.4E-06	0.1864	-3.2E-07	-0.0226
1795	0	Extremo 1A	-6.9E-09	15.223	-1.2E-07	0.4438	-3E-08	-0.0724
1795	0.3	Extremo 1A	-6.9E-09	17.309	-1.2E-07	0.4438	6.2E-09	-4.9523
1795	0.6	Extremo 1A	-6.9E-09	19.395	-1.2E-07	0.4438	4.2E-08	-10.4579
1795	0	Extremo 2A	-4.7E-08	15.223	-8.5E-07	0.4442	-2.2E-07	-0.0725
1795	0.3	Extremo 2A	-4.7E-08	17.309	-8.5E-07	0.4442	3.8E-08	-4.9525
1795	0.6	Extremo 2A	-4.7E-08	19.395	-8.5E-07	0.4442	2.9E-07	-10.4581
1796	0	Extremo 1A	-7.2E-08	35.33	-4.6E-07	0.6667	-2.4E-07	-10.9226
1796	0.5	Extremo 1A	-7.2E-08	39.744	-4.6E-07	0.6667	-8.5E-09	-29.6909
1796	1	Extremo 1A	-7.2E-08	44.158	-4.6E-07	0.6667	2.2E-07	-50.6662
1796	0	Extremo 2A	-5E-07	35.33	-3.3E-06	0.6667	-1.8E-06	-10.9235
1796	0.5	Extremo 2A	-5E-07	39.744	-3.3E-06	0.6667	-9.7E-08	-29.692
1796	1	Extremo 2A	-5E-07	44.158	-3.3E-06	0.6667	1.6E-06	-50.6675
1798	0	Extremo 1A	-1.1E-07	-43.557	6.8E-07	1.1197	3.4E-07	-49.9678
1798	0.5	Extremo 1A	-1.1E-07	-39.143	6.8E-07	1.1197	-2.8E-09	-29.2928
1798	1	Extremo 1A	-1.1E-07	-34.729	6.8E-07	1.1197	-3.5E-07	-10.8248
1798	0	Extremo 2A	-1.1E-06	-43.557	6.4E-06	1.1202	3.2E-06	-49.969
1798	0.5	Extremo 2A	-1.1E-06	-39.143	6.4E-06	1.1202	-1E-09	-29.2939
1798	1	Extremo 2A	-1.1E-06	-34.729	6.4E-06	1.1202	-3.2E-06	-10.8258
1799	0	Extremo 1A	-1.1E-08	-19.288	1.9E-07	0.0653	6.7E-08	-10.3922
1799	0.3	Extremo 1A	-1.1E-08	-17.203	1.9E-07	0.0653	1.1E-08	-4.9185
1799	0.6	Extremo 1A	-1.1E-08	-15.117	1.9E-07	0.0653	-4.5E-08	-0.0707
1799	0	Extremo 2A	-1.1E-07	-19.289	1.7E-06	0.0651	6.3E-07	-10.3925
1799	0.3	Extremo 2A	-1.1E-07	-17.203	1.7E-06	0.0651	1.1E-07	-4.9187
1799	0.6	Extremo 2A	-1.1E-07	-15.117	1.7E-06	0.0651	-4.1E-07	-0.0708
1800	0	Extremo 1A	-8.6E-09	15.381	-1.5E-07	0.7549	-3.8E-08	-0.0792
1800	0.3	Extremo 1A	-8.6E-09	17.467	-1.5E-07	0.7549	7.7E-09	-5.0065
1800	0.6	Extremo 1A	-8.6E-09	19.553	-1.5E-07	0.7549	5.3E-08	-10.5595
1800	0	Extremo 2A	-5.8E-08	15.382	-1.1E-06	0.7558	-2.7E-07	-0.0794
1800	0.3	Extremo 2A	-5.8E-08	17.468	-1.1E-06	0.7558	4.6E-08	-5.0068
1800	0.6	Extremo 2A	-5.8E-08	19.554	-1.1E-06	0.7558	3.6E-07	-10.56
1801	0	Extremo 1A	-9E-08	36.044	-5.8E-07	1.4676	-3E-07	-11.1373
1801	0.5	Extremo 1A	-9E-08	40.458	-5.8E-07	1.4676	-1.1E-08	-30.2626
1801	1	Extremo 1A	-9E-08	44.872	-5.8E-07	1.4676	2.8E-07	-51.595
1801	0	Extremo 2A	-6.1E-07	36.045	-4.1E-06	1.469	-2.2E-06	-11.1387
1801	0.5	Extremo 2A	-6.1E-07	40.459	-4.1E-06	1.469	-1.3E-07	-30.2648
1801	1	Extremo 2A	-6.1E-07	44.873	-4.1E-06	1.469	1.9E-06	-51.598
1803	0	Extremo 1A	-1.5E-07	-44.468	8.8E-07	0.345	4.4E-07	-51.4195
1803	0.5	Extremo 1A	-1.5E-07	-40.054	8.8E-07	0.345	-3.3E-09	-30.2891
1803	1	Extremo 1A	-1.5E-07	-35.64	8.8E-07	0.345	-4.4E-07	-11.3658
1803	0	Extremo 2A	-1.4E-06	-44.469	8.2E-06	0.3439	4.1E-06	-51.4225
1803	0.5	Extremo 2A	-1.4E-06	-40.055	8.2E-06	0.3439	2.9E-09	-30.2915
1803	1	Extremo 2A	-1.4E-06	-35.641	8.2E-06	0.3439	-4.1E-06	-11.3675
1804	0	Extremo 1A	-1.4E-08	-19.554	2.4E-07	-0.2815	8.6E-08	-10.5914
1804	0.3	Extremo 1A	-1.4E-08	-17.468	2.4E-07	-0.2815	1.4E-08	-5.0379
1804	0.6	Extremo 1A	-1.4E-08	-15.383	2.4E-07	-0.2815	-5.7E-08	-0.1103
1804	0	Extremo 2A	-1.4E-07	-19.555	2.2E-06	-0.2823	8.1E-07	-10.5919
1804	0.3	Extremo 2A	-1.4E-07	-17.469	2.2E-06	-0.2823	1.4E-07	-5.0383
1804	0.6	Extremo 2A	-1.4E-07	-15.383	2.2E-06	-0.2823	-5.3E-07	-0.1104
1805	0	Extremo 1A	-1.1E-08	15.546	-1.9E-07	1.047	-4.8E-08	-0.0074
1805	0.3	Extremo 1A	-1.1E-08	17.632	-1.9E-07	1.047	9.5E-09	-4.9842
1805	0.6	Extremo 1A	-1.1E-08	19.718	-1.9E-07	1.047	6.7E-08	-10.5869
1805	0	Extremo 2A	-7.1E-08	15.547	-1.3E-06	1.0483	-3.4E-07	-0.0074
1805	0.3	Extremo 2A	-7.1E-08	17.633	-1.3E-06	1.0483	5.5E-08	-4.9845
1805	0.6	Extremo 2A	-7.1E-08	19.719	-1.3E-06	1.0483	4.5E-07	-10.5874
1806	0	Extremo 1A	-1.1E-07	37.854	-7.3E-07	2.6845	-3.8E-07	-10.769
1806	0.5	Extremo 1A	-1.1E-07	42.268	-7.3E-07	2.6845	-1.5E-08	-30.7993
1806	1	Extremo 1A	-1.1E-07	46.682	-7.3E-07	2.6845	3.5E-07	-53.0367
1806	0	Extremo 2A	-7.5E-07	37.858	-5.1E-06	2.6881	-2.7E-06	-10.7698
1806	0.5	Extremo 2A	-7.5E-07	42.272	-5.1E-06	2.6881	-1.7E-07	-30.8025
1806	1	Extremo 2A	-7.5E-07	46.686	-5.1E-06	2.6881	2.4E-06	-53.0422
1808	0	Extremo 1A	-1.9E-07	-46.971	1.1E-06	-1.4006	5.6E-07	-53.8436
1808	0.5	Extremo 1A	-1.9E-07	-42.557	1.1E-06	-1.4006	-3.8E-09	-31.4614
1808	1	Extremo 1A	-1.9E-07	-38.143	1.1E-06	-1.4006	-5.7E-07	-11.2862
1808	0	Extremo 2A	-1.8E-06	-46.976	1.1E-05	-1.4043	5.3E-06	-53.8498
1808	0.5	Extremo 2A	-1.8E-06	-42.562	1.1E-05	-1.4043	9.3E-09	-31.4652
1808	1	Extremo 2A	-1.8E-06	-38.148	1.1E-05	-1.4043	-5.3E-06	-11.2877
1809	0	Extremo 1A	-1.8E-08	-19.887	3.1E-07	-0.7542	1.1E-07	-10.7385
1809	0.3	Extremo 1A	-1.8E-08	-17.801	3.1E-07	-0.7542	1.9E-08	-5.0852
1809	0.6	Extremo 1A	-1.8E-08	-15.715	3.1E-07	-0.7542	-7.3E-08	-0.0577
1809	0	Extremo 2A	-1.8E-07	-19.888	2.9E-06	-0.7557	1.1E-06	-10.7392
1809	0.3	Extremo 2A	-1.8E-07	-17.802	2.9E-06	-0.7557	1.8E-07	-5.0856
1809	0.6	Extremo 2A	-1.8E-07	-15.716	2.9E-06	-0.7557	-6.9E-07	-0.0578
1810	0	Extremo 1A	-1.4E-08	15.5	-2.4E-07	0.8947	-6E-08	0.1563
1810	0.3	Extremo 1A	-1.4E-08	17.586	-2.4E-07	0.8947	1.2E-08	-4.8067
1810	0.6	Extremo 1A	-1.4E-08	19.672	-2.4E-07	0.8947	8.3E-08	-10.3955
1810	0	Extremo 2A	-8.7E-08	15.501	-1.6E-06	0.8958	-4.1E-07	0.1566
1810	0.3	Extremo 2A	-8.7E-08	17.587	-1.6E-06	0.8958	6.5E-08	-4.8067
1810	0.6	Extremo 2A	-8.7E-08	19.673	-1.6E-06	0.8958	5.5E-07	-10.3957
1811	0	Extremo 1A	-1.4E-07	40.033	-9.1E-07	3.0281	-4.7E-07	-9.3421
1811	0.5	Extremo 1A	-1.4E-07	44.447	-9.1E-07	3.0281	-1.9E-08	-30.4622
1811	1	Extremo 1A	-1.4E-07	48.861	-9.1E-07	3.0281	4.4E-07	-53.7894
1811	0	Extremo 2A	-9.2E-07	40.041	-6.3E-06	3.0326	-3.4E-06	-9.3408
1811	0.5	Extremo 2A	-9.2E-07	44.455	-6.3E-06	3.0326	-2.2E-07	-30.465
1811	1	Extremo 2A	-9.2E-07	48.87	-6.3E-06	3.0326	2.9E-06	-53.7963
1813	0	Extremo 1A	-2.4E-07	-50.535	1.4E-06	-2.6858	7.2E-07	-55.8766
1813	0.5	Extremo 1A	-2.4E-07	-46.121	1.4E-06	-2.6858	-4.3E-09	-31.7125
1813	1	Extremo 1A	-2.4E-07	-41.707	1.4E-06	-2.6858	-7.3E-07	-9.7555
1813	0	Extremo 2A	-2.3E-06	-50.545	1.4E-05	-2.6915	6.9E-06	-55.8855
1813	0.5	Extremo 2A	-2.3E-06	-46.131	1.4E-05	-2.6915	1.9E-08	-31.7166
1813	1	Extremo 2A	-2.3E-06	-41.717	1.4E-05	-2.6915	-6.8E-06	-9.7547
1814	0	Extremo 1A	-2.4E-08	-19.997	3.9E-07	-0.8233	1.4E-07	-10.616
1814	0.3	Extremo 1A	-2.4E-08	-17.911	3.9E-07	-0.8233	2.4E-08	-4.9297
1814	0.6	Extremo 1A	-2.4E-08	-15.825	3.9E-07	-0.8233	-9.4E-08	0.1308
1814	0	Extremo 2A	-2.3E-07	-19.998	3.7E-06	-0.8249	1.4E-06	-10.6165
1814	0.3	Extremo 2A	-2.3E-07	-17.912	3.7E-06	-0.8249	2.4E-07	-4.9299
1814	0.6	Extremo 2A	-2.3E-07	-15.827	3.7E-06	-0.8249	-8.9E-07	0.131
1815	0	Extremo 1A	-1.7E-08	15.275	-3E-07	-4.1E-05	-7.5E-08	0.2153
1815	0.3	Extremo 1A	-1.7E-08	17.361	-3E-07	-4.1E-05	1.5E-08	-4.68
1815	0.6	Extremo 1A	-1.7E-08	19.447	-3E-07	-4.1E-05	1E-07	-10.201
1815	0	Extremo 2A	-1.1E-07	15.275	-2E-06	-0.00019	-5.1E-07	0.2156
1815	0.3	Extremo 2A	-1.1E-07	17.361	-2E-06	-0.00019	7.7E-08	-4.6798
1815	0.6	Extremo 2A	-1.1E-07	19.447	-2E-06	-0.00019	6.6E-07	-10.201
1816	0	Extremo 1A	-1.8E-07	38.951	-1.1E-06	-0.0012	-6E-07	-8.5917
1816	0.5	Extremo 1A	-1.8E-07	43.366	-1.1E-06	-0.0012	-2.5E-08	-29.1709
1816	1	Extremo 1A	-1.8E-07	47.78	-1.1E-06	-0.0012	5.5E-07	-51.9572
1816	0	Extremo 2A	-1.1E-06	38.958	-7.7E-06	-0.00096	-4.2E-06	-8.5892

1816	0.5	Extremo 2A	-1.1E-06	43.372	-7.7E-06	-0.00096	-2.9E-07	-29.1717
1816	1	Extremo 2A	-1.1E-06	47.786	-7.7E-06	-0.00096	3.6E-06	-51.9612
1818	0	Extremo 1A	-3.1E-07	-49.95	1.9E-06	0.0021	9.3E-07	-54.3647
1818	0.5	Extremo 1A	-3.1E-07	-45.536	1.9E-06	0.0021	-4.8E-09	-30.4934
1818	1	Extremo 1A	-3.1E-07	-41.121	1.9E-06	0.0021	-9.4E-07	-8.8292
1818	0	Extremo 2A	-3E-06	-49.958	1.8E-05	0.00012	8.9E-06	-54.3713
1818	0.5	Extremo 2A	-3E-06	-45.544	1.8E-05	0.00012	3.5E-08	-30.4957
1818	1	Extremo 2A	-3E-06	-41.13	1.8E-05	0.00012	-8.8E-06	-8.8271
1819	0	Extremo 1A	-3E-08	-19.804	5.1E-07	0.0004	1.8E-07	-10.4208
1819	0.3	Extremo 1A	-3E-08	-17.718	5.1E-07	0.0004	3.1E-08	-4.7926
1819	0.6	Extremo 1A	-3E-08	-15.632	5.1E-07	0.0004	-1.2E-07	0.2098
1819	0	Extremo 2A	-2.9E-07	-19.805	4.8E-06	-4.6E-05	1.8E-06	-10.4211
1819	0.3	Extremo 2A	-2.9E-07	-17.719	4.8E-06	-4.6E-05	3.1E-07	-4.7926
1819	0.6	Extremo 2A	-2.9E-07	-15.633	4.8E-06	-4.6E-05	-1.1E-06	0.2101
1820	0	Extremo 1A	-2.1E-08	15.5	-3.7E-07	-0.8948	-9.4E-08	0.1563
1820	0.3	Extremo 1A	-2.1E-08	17.586	-3.7E-07	-0.8948	1.8E-08	-4.8067
1820	0.6	Extremo 1A	-2.1E-08	19.672	-3.7E-07	-0.8948	1.3E-07	-10.3955
1820	0	Extremo 2A	-1.3E-07	15.501	-2.4E-06	-0.8962	-6.3E-07	0.1566
1820	0.3	Extremo 2A	-1.3E-07	17.587	-2.4E-06	-0.8962	8.9E-08	-4.8067
1820	0.6	Extremo 2A	-1.3E-07	19.673	-2.4E-06	-0.8962	8.1E-07	-10.3957
1821	0	Extremo 1A	-2.2E-07	40.033	-1.4E-06	-3.0305	-7.5E-07	-9.3421
1821	0.5	Extremo 1A	-2.2E-07	44.447	-1.4E-06	-3.0305	-3.3E-08	-30.4622
1821	1	Extremo 1A	-2.2E-07	48.861	-1.4E-06	-3.0305	6.8E-07	-53.7894
1821	0	Extremo 2A	-1.4E-06	40.041	-9.5E-06	-3.0345	-5.1E-06	-9.3408
1821	0.5	Extremo 2A	-1.4E-06	44.455	-9.5E-06	-3.0345	-3.9E-07	-30.465
1821	1	Extremo 2A	-1.4E-06	48.87	-9.5E-06	-3.0345	4.4E-06	-53.7963
1823	0	Extremo 1A	-4E-07	-50.535	2.4E-06	2.69	1.2E-06	-55.8766
1823	0.5	Extremo 1A	-4E-07	-46.121	2.4E-06	2.69	-5.2E-09	-31.7125
1823	1	Extremo 1A	-4E-07	-41.707	2.4E-06	2.69	-1.2E-06	-9.7555
1823	0	Extremo 2A	-3.9E-06	-50.545	2.3E-05	2.6917	1.1E-05	-55.8855
1823	0.5	Extremo 2A	-3.9E-06	-46.131	2.3E-05	2.6917	5.9E-08	-31.7166
1823	1	Extremo 2A	-3.9E-06	-41.717	2.3E-05	2.6917	-1.1E-05	-9.7547
1824	0	Extremo 1A	-3.9E-08	-19.997	6.5E-07	0.8241	2.3E-07	-10.616
1824	0.3	Extremo 1A	-3.9E-08	-17.911	6.5E-07	0.8241	4E-08	-4.9297
1824	0.6	Extremo 1A	-3.9E-08	-15.825	6.5E-07	0.8241	-1.6E-07	0.1308
1824	0	Extremo 2A	-3.8E-07	-19.998	6.3E-06	0.8248	2.3E-06	-10.6165
1824	0.3	Extremo 2A	-3.8E-07	-17.912	6.3E-06	0.8248	4E-07	-4.9298
1824	0.6	Extremo 2A	-3.8E-07	-15.827	6.3E-06	0.8248	-1.5E-06	0.131
1825	0	Extremo 1A	-2.6E-08	15.546	-4.6E-07	-1.0471	-1.2E-07	-0.0074
1825	0.3	Extremo 1A	-2.6E-08	17.632	-4.6E-07	-1.0471	2.2E-08	-4.9842
1825	0.6	Extremo 1A	-2.6E-08	19.718	-4.6E-07	-1.0471	1.6E-07	-10.5868
1825	0	Extremo 2A	-1.5E-07	15.547	-2.9E-06	-1.0487	-7.7E-07	-0.0074
1825	0.3	Extremo 2A	-1.5E-07	17.633	-2.9E-06	-1.0487	1E-07	-4.9845
1825	0.6	Extremo 2A	-1.5E-07	19.719	-2.9E-06	-1.0487	9.7E-07	-10.5874
1826	0	Extremo 1A	-2.7E-07	37.854	-1.8E-06	-2.687	-9.4E-07	-10.7689
1826	0.5	Extremo 1A	-2.7E-07	42.268	-1.8E-06	-2.687	-4.3E-08	-30.7993
1826	1	Extremo 1A	-2.7E-07	46.682	-1.8E-06	-2.687	8.5E-07	-53.0367
1826	0	Extremo 2A	-1.6E-06	37.858	-1.2E-05	-2.69	-6.3E-06	-10.7698
1826	0.5	Extremo 2A	-1.6E-06	42.272	-1.2E-05	-2.69	-5.1E-07	-30.8025
1826	1	Extremo 2A	-1.6E-06	46.686	-1.2E-05	-2.69	5.3E-06	-53.0422
1828	0	Extremo 1A	-5.2E-07	-46.971	3.1E-06	1.4047	1.5E-06	-53.8436
1828	0.5	Extremo 1A	-5.2E-07	-42.557	3.1E-06	1.4047	-5.3E-09	-31.4614
1828	1	Extremo 1A	-5.2E-07	-38.143	3.1E-06	1.4047	-1.5E-06	-11.2862
1828	0	Extremo 2A	-5.1E-06	-46.976	3E-05	1.4046	1.5E-05	-53.8497
1828	0.5	Extremo 2A	-5.1E-06	-42.562	3E-05	1.4046	9.4E-08	-31.4652
1828	1	Extremo 2A	-5.1E-06	-38.148	3E-05	1.4046	-1.5E-05	-11.2877
1829	0	Extremo 1A	-5E-08	-19.887	8.4E-07	0.755	3E-07	-10.7385
1829	0.3	Extremo 1A	-5E-08	-17.801	8.4E-07	0.755	5.1E-08	-5.0852
1829	0.6	Extremo 1A	-5E-08	-15.715	8.4E-07	0.755	-2E-07	-0.0577
1829	0	Extremo 2A	-4.9E-07	-19.888	8.1E-06	0.7556	3E-06	-10.7392
1829	0.3	Extremo 2A	-4.9E-07	-17.802	8.1E-06	0.7556	5.2E-07	-5.0856
1829	0.6	Extremo 2A	-4.9E-07	-15.716	8.1E-06	0.7556	-1.9E-06	-0.0578
1830	0	Extremo 1A	-3.2E-08	15.381	-5.8E-07	-0.755	-1.5E-07	-0.0792
1830	0.3	Extremo 1A	-3.2E-08	17.467	-5.8E-07	-0.755	2.7E-08	-5.0065
1830	0.6	Extremo 1A	-3.2E-08	19.553	-5.8E-07	-0.755	2E-07	-10.5595
1830	0	Extremo 2A	-1.8E-07	15.382	-3.5E-06	-0.7562	-9.4E-07	-0.0794
1830	0.3	Extremo 2A	-1.8E-07	17.468	-3.5E-06	-0.7562	1.2E-07	-5.0068
1830	0.6	Extremo 2A	-1.8E-07	19.554	-3.5E-06	-0.7562	1.2E-06	-10.56
1831	0	Extremo 1A	-3.4E-07	36.044	-2.2E-06	-1.4701	-1.2E-06	-11.1373
1831	0.5	Extremo 1A	-3.4E-07	40.458	-2.2E-06	-1.4701	-5.7E-08	-30.2626
1831	1	Extremo 1A	-3.4E-07	44.872	-2.2E-06	-1.4701	1.1E-06	-51.5949
1831	0	Extremo 2A	-2E-06	36.045	-1.4E-05	-1.4709	-7.7E-06	-11.1387
1831	0.5	Extremo 2A	-2E-06	40.459	-1.4E-05	-1.4709	-6.8E-07	-30.2648
1831	1	Extremo 2A	-2E-06	44.873	-1.4E-05	-1.4709	6.4E-06	-51.598
1833	0	Extremo 1A	-6.7E-07	-44.468	4E-06	-0.3408	2E-06	-51.4194
1833	0.5	Extremo 1A	-6.7E-07	-40.054	4E-06	-0.3408	-5.1E-09	-30.2891
1833	1	Extremo 1A	-6.7E-07	-35.64	4E-06	-0.3408	-2E-06	-11.3658
1833	0	Extremo 2A	-6.6E-06	-44.469	3.8E-05	-0.3436	1.9E-05	-51.4224
1833	0.5	Extremo 2A	-6.6E-06	-40.055	3.8E-05	-0.3436	1.4E-07	-30.2914
1833	1	Extremo 2A	-6.6E-06	-35.641	3.8E-05	-0.3436	-1.9E-05	-11.3674
1834	0	Extremo 1A	-6.5E-08	-19.554	1.1E-06	0.2823	3.9E-07	-10.5914
1834	0.3	Extremo 1A	-6.5E-08	-17.468	1.1E-06	0.2823	6.6E-08	-5.0379
1834	0.6	Extremo 1A	-6.5E-08	-15.383	1.1E-06	0.2823	-2.6E-07	-0.1103
1834	0	Extremo 2A	-6.4E-07	-19.555	1E-05	0.2822	3.8E-06	-10.5919
1834	0.3	Extremo 2A	-6.4E-07	-17.469	1E-05	0.2822	6.8E-07	-5.0383
1834	0.6	Extremo 2A	-6.4E-07	-15.383	1E-05	0.2822	-2.5E-06	-0.1104
1835	0	Extremo 1A	-4E-08	15.223	-7.2E-07	-0.4439	-1.8E-07	-0.0724
1835	0.3	Extremo 1A	-4E-08	17.309	-7.2E-07	-0.4439	3.3E-08	-4.9522
1835	0.6	Extremo 1A	-4E-08	19.395	-7.2E-07	-0.4439	2.5E-07	-10.4578
1835	0	Extremo 2A	-2.2E-07	15.223	-4.2E-06	-0.4445	-1.1E-06	-0.0725
1835	0.3	Extremo 2A	-2.2E-07	17.309	-4.2E-06	-0.4445	1.3E-07	-4.9525
1835	0.6	Extremo 2A	-2.2E-07	19.395	-4.2E-06	-0.4445	1.4E-06	-10.4581
1836	0	Extremo 1A	-4.2E-07	35.33	-2.8E-06	-0.6693	-1.5E-06	-10.9225
1836	0.5	Extremo 1A	-4.2E-07	39.744	-2.8E-06	-0.6693	-7.5E-08	-29.6908
1836	1	Extremo 1A	-4.2E-07	44.158	-2.8E-06	-0.6693	1.3E-06	-50.6661
1836	0	Extremo 2A	-2.3E-06	35.33	-1.7E-05	-0.6686	-9.5E-06	-10.9235
1836	0.5	Extremo 2A	-2.3E-06	39.744	-1.7E-05	-0.6686	-9E-07	-29.692
1836	1	Extremo 2A	-2.3E-06	44.158	-1.7E-05	-0.6686	7.7E-06	-50.6675
1838	0	Extremo 1A	-8.6E-07	-43.557	5.1E-06	-1.1155	2.5E-06	-49.9677
1838	0.5	Extremo 1A	-8.6E-07	-39.143	5.1E-06	-1.1155	-4.1E-09	-29.2927
1838	1	Extremo 1A	-8.6E-07	-34.729	5.1E-06	-1.1155	-2.5E-06	-10.8247
1838	0	Extremo 2A	-8.5E-06	-43.557	4.9E-05	-1.1199	2.5E-05	-49.9689
1838	0.5	Extremo 2A	-8.5E-06	-39.143	4.9E-05	-1.1199	2.2E-07	-29.2938
1838	1	Extremo 2A	-8.5E-06	-34.729	4.9E-05	-1.1199	-2.5E-05	-10.8257
1839	0	Extremo 1A	-8.4E-08	-19.288	1.4E-06	-0.0644	5E-07	-10.3922
1839	0.3	Extremo 1A	-8.4E-08	-17.203	1.4E-06	-0.0644	8.6E-08	-4.9185
1839	0.6	Extremo 1A	-8.4E-08	-15.117	1.4E-06	-0.0644	-3.3E-07	-0.0706
1839	0	Extremo 2A	-8.3E-07	-19.289	1.4E-05	-0.0651	5E-06	-10.3924
1839	0.3	Extremo 2A	-8.3E-07	-17.203	1.4E-05	-0.0651	8.8E-07	-4.9187
1839	0.6	Extremo 2A	-8.3E-07	-15.117	1.4E-05	-0.0651	-3.2E-06	-0.0708
1840	0	Extremo 1A	-4.9E-08	15.134	-8.9E-07	-0.2404	-2.3E-07	-0.0482
1840	0.3	Extremo 1A	-4.9E-08	17.22	-8.9E-07	-0.2404	4E-08	-4.9015
1840	0.6	Extremo 1A	-4.9E-08	19.306	-8.9E-07	-0.2404	3.1E-07	-10.3805
1840	0	Extremo 2A	-2.6E-07	15.135	-5E-06	-0.2407	-1.4E-06	-0.0483
1840	0.3	Extremo 2A	-2.6E-07	17.221	-5E-06	-0.2407	1.3E-07	-4.9016
1840	0.6	Extremo 2A	-2.6E-07	19.307	-5E-06	-0.2407	1.6E-06	-10.3806
1841	0	Extremo 1A	-5.2E-07	35.161	-3.4E-06	-0.3028	-1.8E-06	-10.6719
1841	0.5	Extremo 1A	-5.2E-07	39.575	-3.4E-06	-0.3028	-9.8E-08	-29.3561
1841	1	Extremo 1A	-5.2E-07	43.989	-3.4E-06	-0.3028	1.6E-06	-50.2473
1841	0	Extremo 2A	-2.7E-06	35.161	-2.1E-05	-0.3014	-1.2E-05	-10.6725
1841	0.5	Extremo 2A	-2.7E-06	39.575	-2.1E-05	-0.3014	-1.2E-06	-29.3567
1841	1	Extremo 2A	-2.7E-06	43.99	-2.1E-05	-0.3014	9.1E-06	-50.248
1843	0	Extremo 1A	-1.1E-06	-43.333	6.6E-06	-1.1226	3.3E-06	-49.2839
1843	0.5	Extremo 1A	-1.1E-06	-38.919	6.6E-06	-1.1226	-2.2E-09	-28.7208
1843	1	Extremo 1A	-1.1E-06	-34.505	6.6E-06	-1.1226	-3.3E-06	-10.3648
1843	0	Extremo 2A	-1.1E-05	-43.333	6.4E-05	-1.1275	3.2E-05	-49.2843
1843	0.5	Extremo 2A	-1.1E-05	-38.919	6.4E-05	-1.1275	3.3E-07	-28.7212
1843	1	Extremo 2A	-1.1E-05	-34.505	6.4E-05	-1.1275	-3.2E-05	-10.3652
1844	0	Extremo 1A	-1.1E-07	-19.141	1.8E-06	-0.1854	6.5E-07	-10.2559
1844	0.3	Extremo 1A	-1.1E-07	-17.055	1.8E-06	-0.1854	1.1E-07	-4.8263
1844	0.6	Extremo 1A	-1.1E-07	-14.97	1.8E-06	-0.1854	-4.3E-07	-0.0226
1844	0	Extremo 2A	-1.1E-06	-19.142	1.8E-05	-0.1864	6.4E-06	-10.256
1844	0.3	Extremo 2A	-1.1E-06	-17.056	1.8E-05	-0.1864	1.1E-06	-4.8264
1844	0.6	Extremo 2A	-1.1E-06	-14.97	1.8E-05	-0.1864	-4.1E-06	-0.0226
1845	0	Extremo 1A	-6.1E-08	15.097	-1.1E-06	-0.1193	-2.8E-07	-0.0318
1845	0.3	Extremo 1A	-6.1E-08	17.183	-1.1E-06	-0.1193	4.8E-08	-4.8737
1845	0.6	Extremo 1A	-6.1E-08	19.269	-1.1E-06	-0.1193	3.8E-07	-10.3415
1845	0	Extremo 2A	-3E-07	15.097	-6E-06	-0.1194	-1.7E-06	-0.0318
1845	0.3	Extremo 2A	-3E-07	17.183	-6E-06	-0.1194	1.3E-07	-4.8738
1845	0.6	Extremo 2A	-3E-07	19.269	-6E-06	-0.1194	1.9E-06	-10.3416
1846	0	Extremo 1A	-6.4E-07	35.152	-4.3E-06	-0.1418	-2.3E-06	-10.5319
1846	0.5	Extremo 1A	-6.4E-07	39.566	-4.3E-06	-0.1418	-1.3E-07	-29.2116
1846	1	Extremo 1A	-6.4E-07	43.981	-4.3E-06	-0.1418	2E-06	-50.0983
1846	0	Extremo 2A	-3.2E-06	35.153	-2.5E-05	-0.1401	-1.4E-05	-10.5322

1846	0.5	Extremo 2A	-3.2E-06	39.567	-2.5E-05	-0.1401	-1.6E-06	-29.212
1846	1	Extremo 2A	-3.2E-06	43.981	-2.5E-05	-0.1401	1.1E-05	-50.0988
1848	0	Extremo 1A	-1.4E-06	-43.294	8.4E-06	-0.7612	4.2E-06	-48.9973
1848	0.5	Extremo 1A	-1.4E-06	-38.88	8.4E-06	-0.7612	1.4E-09	-28.4536
1848	1	Extremo 1A	-1.4E-06	-34.466	8.4E-06	-0.7612	-4.2E-06	-10.1169
1848	0	Extremo 2A	-1.4E-05	-43.294	8.3E-05	-0.7662	4.2E-05	-48.9974
1848	0.5	Extremo 2A	-1.4E-05	-38.88	8.3E-05	-0.7662	4.8E-07	-28.4537
1848	1	Extremo 2A	-1.4E-05	-34.466	8.3E-05	-0.7662	-4.1E-05	-10.117
1849	0	Extremo 1A	-1.4E-07	-19.074	2.3E-06	-0.1568	8.4E-07	-10.186
1849	0.3	Extremo 1A	-1.4E-07	-16.988	2.3E-06	-0.1568	1.4E-07	-4.7768
1849	0.6	Extremo 1A	-1.4E-07	-14.902	2.3E-06	-0.1568	-5.5E-07	0.0067
1849	0	Extremo 2A	-1.4E-06	-19.074	2.3E-05	-0.1578	8.4E-06	-10.186
1849	0.3	Extremo 2A	-1.4E-06	-16.988	2.3E-05	-0.1578	1.5E-06	-4.7768
1849	0.6	Extremo 2A	-1.4E-06	-14.902	2.3E-05	-0.1578	-5.4E-06	0.0067
1850	0	Extremo 1A	-7.5E-08	15.085	-1.4E-06	-0.0367	-3.5E-07	-0.0249
1850	0.3	Extremo 1A	-7.5E-08	17.171	-1.4E-06	-0.0367	5.8E-08	-4.8632
1850	0.6	Extremo 1A	-7.5E-08	19.257	-1.4E-06	-0.0367	4.7E-07	-10.3273
1850	0	Extremo 2A	-3.4E-07	15.085	-7E-06	-0.0366	-2E-06	-0.025
1850	0.3	Extremo 2A	-3.4E-07	17.171	-7E-06	-0.0366	1.2E-07	-4.8633
1850	0.6	Extremo 2A	-3.4E-07	19.257	-7E-06	-0.0366	2.2E-06	-10.3274
1851	0	Extremo 1A	-7.8E-07	35.165	-5.3E-06	-0.0461	-2.8E-06	-10.4791
1851	0.5	Extremo 1A	-7.8E-07	39.579	-5.3E-06	-0.0461	-1.7E-07	-29.165
1851	1	Extremo 1A	-7.8E-07	43.993	-5.3E-06	-0.0461	2.5E-06	-50.0579
1851	0	Extremo 2A	-3.7E-06	35.165	-2.9E-05	-0.0441	-1.7E-05	-10.4794
1851	0.5	Extremo 2A	-3.7E-06	39.579	-2.9E-05	-0.0441	-2.1E-06	-29.1654
1851	1	Extremo 2A	-3.7E-06	43.993	-2.9E-05	-0.0441	1.3E-05	-50.0584
1853	0	Extremo 1A	-1.9E-06	-43.29	1.1E-05	-0.2608	5.5E-06	-48.8959
1853	0.5	Extremo 1A	-1.9E-06	-38.876	1.1E-05	-0.2608	7.5E-09	-28.3543
1853	1	Extremo 1A	-1.9E-06	-34.462	1.1E-05	-0.2608	-5.4E-06	-10.0198
1853	0	Extremo 2A	-1.9E-05	-43.29	0.00011	-0.2658	5.5E-05	-48.8958
1853	0.5	Extremo 2A	-1.9E-05	-38.876	0.00011	-0.2658	7E-07	-28.3542
1853	1	Extremo 2A	-1.9E-05	-34.462	0.00011	-0.2658	-5.3E-05	-10.0197
1854	0	Extremo 1A	-1.8E-07	-19.049	3E-06	-0.0579	1.1E-06	-10.1588
1854	0.3	Extremo 1A	-1.8E-07	-16.963	3E-06	-0.0579	1.9E-07	-4.7571
1854	0.6	Extremo 1A	-1.8E-07	-14.877	3E-06	-0.0579	-7.1E-07	0.0189
1854	0	Extremo 2A	-1.8E-06	-19.049	3E-05	-0.0589	1.1E-05	-10.1588
1854	0.3	Extremo 2A	-1.8E-06	-16.963	3E-05	-0.0589	2E-06	-4.757
1854	0.6	Extremo 2A	-1.8E-06	-14.877	3E-05	-0.0589	-7E-06	0.0189
1855	0	Extremo 1A	-9.1E-08	15.085	-1.7E-06	0.0359	-4.3E-07	-0.025
1855	0.3	Extremo 1A	-9.1E-08	17.171	-1.7E-06	0.0359	6.9E-08	-4.8633
1855	0.6	Extremo 1A	-9.1E-08	19.257	-1.7E-06	0.0359	5.7E-07	-10.3274
1855	0	Extremo 2A	-3.8E-07	15.085	-8.1E-06	0.0361	-2.3E-06	-0.025
1855	0.3	Extremo 2A	-3.8E-07	17.171	-8.1E-06	0.0361	8.6E-08	-4.8633
1855	0.6	Extremo 2A	-3.8E-07	19.257	-8.1E-06	0.0361	2.5E-06	-10.3275
1856	0	Extremo 1A	-9.6E-07	35.165	-6.6E-06	0.0374	-3.5E-06	-10.4794
1856	0.5	Extremo 1A	-9.6E-07	39.579	-6.6E-06	0.0374	-2.3E-07	-29.1652
1856	1	Extremo 1A	-9.6E-07	43.993	-6.6E-06	0.0374	3.1E-06	-50.0581
1856	0	Extremo 2A	-4.1E-06	35.165	-3.5E-05	0.0399	-2E-05	-10.4797
1856	0.5	Extremo 2A	-4.1E-06	39.579	-3.5E-05	0.0399	-2.8E-06	-29.1657
1856	1	Extremo 2A	-4.1E-06	43.993	-3.5E-05	0.0399	1.5E-05	-50.0587
1858	0	Extremo 1A	-2.4E-06	-43.29	1.4E-05	0.2733	7E-06	-48.896
1858	0.5	Extremo 1A	-2.4E-06	-38.876	1.4E-05	0.2733	1.7E-08	-28.3545
1858	1	Extremo 1A	-2.4E-06	-34.462	1.4E-05	0.2733	-7E-06	-10.02
1858	0	Extremo 2A	-2.4E-05	-43.29	0.00014	0.2684	7.1E-05	-48.8956
1858	0.5	Extremo 2A	-2.4E-05	-38.876	0.00014	0.2684	1E-06	-28.3541
1858	1	Extremo 2A	-2.4E-05	-34.462	0.00014	0.2684	-6.9E-05	-10.0196
1859	0	Extremo 1A	-2.3E-07	-19.049	3.8E-06	0.0603	1.4E-06	-10.1589
1859	0.3	Extremo 1A	-2.3E-07	-16.963	3.8E-06	0.0603	2.4E-07	-4.7571
1859	0.6	Extremo 1A	-2.3E-07	-14.877	3.8E-06	0.0603	-9.1E-07	0.0188
1859	0	Extremo 2A	-2.4E-06	-19.049	3.9E-05	0.0594	1.4E-05	-10.1587
1859	0.3	Extremo 2A	-2.4E-06	-16.963	3.9E-05	0.0594	2.6E-06	-4.757
1859	0.6	Extremo 2A	-2.4E-06	-14.877	3.9E-05	0.0594	-9.1E-06	0.0189
1860	0	Extremo 1A	-1.1E-07	15.097	-2.1E-06	0.1189	-5.3E-07	-0.032
1860	0.3	Extremo 1A	-1.1E-07	17.183	-2.1E-06	0.1189	8.2E-08	-4.874
1860	0.6	Extremo 1A	-1.1E-07	19.269	-2.1E-06	0.1189	7E-07	-10.3418
1860	0	Extremo 2A	-4.1E-07	15.097	-9.2E-06	0.1191	-2.7E-06	-0.0319
1860	0.3	Extremo 2A	-4.1E-07	17.183	-9.2E-06	0.1191	2.1E-08	-4.874
1860	0.6	Extremo 2A	-4.1E-07	19.269	-9.2E-06	0.1191	2.8E-06	-10.3419
1861	0	Extremo 1A	-1.2E-06	35.152	-8.1E-06	0.1334	-4.3E-06	-10.5332
1861	0.5	Extremo 1A	-1.2E-06	39.566	-8.1E-06	0.1334	-3E-07	-29.2128
1861	1	Extremo 1A	-1.2E-06	43.98	-8.1E-06	0.1334	3.7E-06	-50.0994
1861	0	Extremo 2A	-4.6E-06	35.153	-4E-05	0.1364	-2.4E-05	-10.5331
1861	0.5	Extremo 2A	-4.6E-06	39.567	-4E-05	0.1364	-3.7E-06	-29.213
1861	1	Extremo 2A	-4.6E-06	43.981	-4E-05	0.1364	1.6E-05	-50.1
1863	0	Extremo 1A	-3.1E-06	-43.294	1.8E-05	0.7735	9.1E-06	-48.998
1863	0.5	Extremo 1A	-3.1E-06	-38.88	1.8E-05	0.7735	3.2E-08	-28.4545
1863	1	Extremo 1A	-3.1E-06	-34.466	1.8E-05	0.7735	-9E-06	-10.118
1863	0	Extremo 2A	-3.2E-05	-43.294	0.00018	0.7691	9.2E-05	-48.9969
1863	0.5	Extremo 2A	-3.2E-05	-38.88	0.00018	0.7691	1.4E-06	-28.4534
1863	1	Extremo 2A	-3.2E-05	-34.466	0.00018	0.7691	-9E-05	-10.1169
1864	0	Extremo 1A	-3E-07	-19.074	5E-06	0.159	1.8E-06	-10.1863
1864	0.3	Extremo 1A	-3E-07	-16.988	5E-06	0.159	3.1E-07	-4.777
1864	0.6	Extremo 1A	-3E-07	-14.902	5E-06	0.159	-1.2E-06	0.0066
1864	0	Extremo 2A	-3.1E-06	-19.074	5E-05	0.1583	1.8E-05	-10.186
1864	0.3	Extremo 2A	-3.1E-06	-16.988	5E-05	0.1583	3.4E-06	-4.7768
1864	0.6	Extremo 2A	-3.1E-06	-14.902	5E-05	0.1583	-1.2E-05	0.0067
1865	0	Extremo 1A	-1.3E-07	15.135	-2.5E-06	0.2409	-6.6E-07	-0.0486
1865	0.3	Extremo 1A	-1.3E-07	17.221	-2.5E-06	0.2409	9.5E-08	-4.9021
1865	0.6	Extremo 1A	-1.3E-07	19.307	-2.5E-06	0.2409	8.5E-07	-10.3814
1865	0	Extremo 2A	-4.3E-07	15.135	-1E-05	0.241	-3.2E-06	-0.0485
1865	0.3	Extremo 2A	-4.3E-07	17.221	-1E-05	0.241	-9.1E-08	-4.902
1865	0.6	Extremo 2A	-4.3E-07	19.307	-1E-05	0.241	3E-06	-10.3812
1866	0	Extremo 1A	-1.4E-06	35.161	-9.9E-06	0.2958	-5.4E-06	-10.6752
1866	0.5	Extremo 1A	-1.4E-06	39.576	-9.9E-06	0.2958	-3.9E-07	-29.3595
1866	1	Extremo 1A	-1.4E-06	43.99	-9.9E-06	0.2958	4.6E-06	-50.2508
1866	0	Extremo 2A	-4.8E-06	35.162	-4.6E-05	0.2989	-2.8E-05	-10.6745
1866	0.5	Extremo 2A	-4.8E-06	39.576	-4.6E-05	0.2989	-4.9E-06	-29.3591
1866	1	Extremo 2A	-4.8E-06	43.99	-4.6E-05	0.2989	1.8E-05	-50.2506
1868	0	Extremo 1A	-4E-06	-43.333	2.3E-05	1.134	1.2E-05	-49.2865
1868	0.5	Extremo 1A	-4E-06	-38.919	2.3E-05	1.134	5.5E-08	-28.7237
1868	1	Extremo 1A	-4E-06	-34.505	2.3E-05	1.134	-1.2E-05	-10.3679
1868	0	Extremo 2A	-4.1E-05	-43.333	0.00024	1.1308	0.00012	-49.2838
1868	0.5	Extremo 2A	-4.1E-05	-38.918	0.00024	1.1308	2.1E-06	-28.721
1868	1	Extremo 2A	-4.1E-05	-34.504	0.00024	1.1308	-0.00012	-10.3653
1869	0	Extremo 1A	-3.9E-07	-19.142	6.4E-06	0.1868	2.3E-06	-10.2567
1869	0.3	Extremo 1A	-3.9E-07	-17.056	6.4E-06	0.1868	4.1E-07	-4.8269
1869	0.6	Extremo 1A	-3.9E-07	-14.97	6.4E-06	0.1868	-1.5E-06	-0.023
1869	0	Extremo 2A	-4E-06	-19.141	6.6E-05	0.1869	2.4E-05	-10.256
1869	0.3	Extremo 2A	-4E-06	-17.056	6.6E-05	0.1869	4.4E-06	-4.8264
1869	0.6	Extremo 2A	-4E-06	-14.97	6.6E-05	0.1869	-1.5E-05	-0.0227
1870	0	Extremo 1A	-1.6E-07	15.225	-3.1E-06	0.4465	-8E-07	-0.0732
1870	0.3	Extremo 1A	-1.6E-07	17.311	-3.1E-06	0.4465	1.1E-07	-4.9536
1870	0.6	Extremo 1A	-1.6E-07	19.397	-3.1E-06	0.4465	1E-06	-10.4599
1870	0	Extremo 2A	-4.3E-07	15.225	-1.1E-05	0.446	-3.6E-06	-0.0729
1870	0.3	Extremo 2A	-4.3E-07	17.311	-1.1E-05	0.446	-2.7E-07	-4.9532
1870	0.6	Extremo 2A	-4.3E-07	19.396	-1.1E-05	0.446	3.1E-06	-10.4593
1871	0	Extremo 1A	-1.7E-06	35.332	-1.2E-05	0.6667	-6.6E-06	-10.9293
1871	0.5	Extremo 1A	-1.7E-06	39.746	-1.2E-05	0.6667	-5.2E-07	-29.6989
1871	1	Extremo 1A	-1.7E-06	44.16	-1.2E-05	0.6667	5.6E-06	-50.6755
1871	0	Extremo 2A	-4.9E-06	35.332	-5.2E-05	0.6691	-3.3E-05	-10.9272
1871	0.5	Extremo 2A	-4.9E-06	39.746	-5.2E-05	0.6691	-6.5E-06	-29.6967
1871	1	Extremo 2A	-4.9E-06	44.16	-5.2E-05	0.6691	2E-05	-50.6732
1873	0	Extremo 1A	-5.2E-06	-43.558	3E-05	1.123	1.5E-05	-49.9759
1873	0.5	Extremo 1A	-5.2E-06	-39.144	3E-05	1.123	9E-08	-29.3003
1873	1	Extremo 1A	-5.2E-06	-34.73	3E-05	1.123	-1.5E-05	-10.8318
1873	0	Extremo 2A	-5.4E-05	-43.557	0.00031	1.1233	0.00016	-49.9692
1873	0.5	Extremo 2A	-5.4E-05	-39.143	0.00031	1.1233	2.9E-06	-29.2944
1873	1	Extremo 2A	-5.4E-05	-34.729	0.00031	1.1233	-0.00015	-10.8266
1874	0	Extremo 1A	-5E-07	-19.29	8.3E-06	0.0638	3E-06	-10.3942
1874	0.3	Extremo 1A	-5E-07	-17.204	8.3E-06	0.0638	5.3E-07	-4.9199
1874	0.6	Extremo 1A	-5E-07	-15.119	8.3E-06	0.0638	-2E-06	-0.0715
1874	0	Extremo 2A	-5.3E-06	-19.289	8.6E-05	0.0654	3.1E-05	-10.3926
1874	0.3	Extremo 2A	-5.3E-06	-17.203	8.6E-05	0.0654	5.8E-06	-4.9189
1874	0.6	Extremo 2A	-5.3E-06	-15.117	8.6E-05	0.0654	-2E-05	-0.0709
1875	0	Extremo 1A	-1.9E-07	15.385	-3.7E-06	0.7612	-9.8E-07	-0.0801
1875	0.3	Extremo 1A	-1.9E-07	17.471	-3.7E-06	0.7612	1.2E-07	-5.0086
1875	0.6	Extremo 1A	-1.9E-07	19.557	-3.7E-06	0.7612	1.2E-06	-10.5629
1875	0	Extremo 2A	-3.7E-07	15.384	-1.2E-05	0.7596	-4E-06	-0.0799
1875	0.3	Extremo 2A	-3.7E-07	17.47	-1.2E-05	0.7596	-5.6E-07	-5.0079
1875	0.6	Extremo 2A	-3.7E-07	19.556	-1.2E-05	0.7596	2.9E-06	-10.5618
1876	0	Extremo 1A	-2.1E-06	36.055	-1.5E-05	1.4778	-8.1E-06	-11.1471
1876	0.5	Extremo 1A	-2.1E-06	40.469	-1.5E-05	1.4778	-6.9E-07	-30.2783
1876	1	Extremo 1A	-2.1E-06	44.883	-1.5E-05	1.4778	6.7E-06	-51.6165
1876	0	Extremo 2A	-4.5E-06	36.051	-5.7E-05	1.477	-3.7E-05	-11.1439

1876	0.5	Extremo 2A	-4.5E-06	40.465	-5.7E-05	1.477	-8.6E-06	-30.273
1876	1	Extremo 2A	-4.5E-06	44.879	-5.7E-05	1.477	2E-05	-51.6091
1878	0	Extremo 1A	-6.7E-06	-44.477	3.9E-05	0.3379	2E-05	-51.4404
1878	0.5	Extremo 1A	-6.7E-06	-40.063	3.9E-05	0.3379	1.4E-07	-30.3054
1878	1	Extremo 1A	-6.7E-06	-35.649	3.9E-05	0.3379	-1.9E-05	-11.3774
1878	0	Extremo 2A	-7.1E-05	-44.47	0.0004	0.3459	0.00021	-51.4254
1878	0.5	Extremo 2A	-7.1E-05	-40.056	0.0004	0.3459	4.1E-06	-30.2938
1878	1	Extremo 2A	-7.1E-05	-35.642	0.0004	0.3459	-0.0002	-11.3691
1879	0	Extremo 1A	-6.5E-07	-19.559	1.1E-05	-0.287	3.9E-06	-10.5951
1879	0.3	Extremo 1A	-6.5E-07	-17.473	1.1E-05	-0.287	6.9E-07	-5.0404
1879	0.6	Extremo 1A	-6.5E-07	-15.387	1.1E-05	-0.287	-2.5E-06	-0.1114
1879	0	Extremo 2A	-6.9E-06	-19.556	0.00011	-0.2824	4.1E-05	-10.5924
1879	0.3	Extremo 2A	-6.9E-06	-17.47	0.00011	-0.2824	7.6E-06	-5.0386
1879	0.6	Extremo 2A	-6.9E-06	-15.384	0.00011	-0.2824	-2.6E-05	-0.1106
1880	0	Extremo 1A	-2.3E-07	15.553	-4.5E-06	1.0569	-1.2E-06	-0.0075
1880	0.3	Extremo 1A	-2.3E-07	17.639	-4.5E-06	1.0569	1.4E-07	-4.9863
1880	0.6	Extremo 1A	-2.3E-07	19.725	-4.5E-06	1.0569	1.5E-06	-10.5908
1880	0	Extremo 2A	-2.5E-07	15.55	-1.1E-05	1.0543	-4.3E-06	-0.0077
1880	0.3	Extremo 2A	-2.5E-07	17.636	-1.1E-05	1.0543	-1E-06	-4.9857
1880	0.6	Extremo 2A	-2.5E-07	19.722	-1.1E-05	1.0543	2.4E-06	-10.5895
1881	0	Extremo 1A	-2.5E-06	37.887	-1.8E-05	2.7108	-9.9E-06	-10.7754
1881	0.5	Extremo 1A	-2.5E-06	42.301	-1.8E-05	2.7108	-9.1E-07	-30.8223
1881	1	Extremo 1A	-2.5E-06	46.715	-1.8E-05	2.7108	8.1E-06	-53.0763
1881	0	Extremo 2A	-3.5E-06	37.873	-6.1E-05	2.7046	-4.2E-05	-10.7742
1881	0.5	Extremo 2A	-3.5E-06	42.287	-6.1E-05	2.7046	-1.1E-05	-30.814
1881	1	Extremo 2A	-3.5E-06	46.701	-6.1E-05	2.7046	1.9E-05	-53.0609
1883	0	Extremo 1A	-8.7E-06	-47.005	5.1E-05	-1.4264	2.6E-05	-53.8869
1883	0.5	Extremo 1A	-8.7E-06	-42.59	5.1E-05	-1.4264	2.1E-07	-31.4881
1883	1	Extremo 1A	-8.7E-06	-38.176	5.1E-05	-1.4264	-2.5E-05	-11.2964
1883	0	Extremo 2A	-9.2E-05	-46.984	0.00052	-1.4051	0.00027	-53.8581
1883	0.5	Extremo 2A	-9.2E-05	-42.57	0.00052	-1.4051	5.8E-06	-31.4698
1883	1	Extremo 2A	-9.2E-05	-38.155	0.00052	-1.4051	-0.00026	-11.2886
1884	0	Extremo 1A	-8.5E-07	-19.895	1.4E-05	-0.7646	5.1E-06	-10.7434
1884	0.3	Extremo 1A	-8.5E-07	-17.809	1.4E-05	-0.7646	9E-07	-5.0879
1884	0.6	Extremo 1A	-8.5E-07	-15.723	1.4E-05	-0.7646	-3.3E-06	-0.0582
1884	0	Extremo 2A	-9E-06	-19.89	0.00015	-0.7564	5.4E-05	-10.7399
1884	0.3	Extremo 2A	-9E-06	-17.804	0.00015	-0.7564	1E-05	-5.0859
1884	0.6	Extremo 2A	-9E-06	-15.718	0.00015	-0.7564	-3.4E-05	-0.0577
1885	0	Extremo 1A	-2.7E-07	15.506	-5.3E-06	0.9034	-1.5E-06	0.158
1885	0.3	Extremo 1A	-2.7E-07	17.592	-5.3E-06	0.9034	1.5E-07	-4.8068
1885	0.6	Extremo 1A	-2.7E-07	19.678	-5.3E-06	0.9034	1.7E-06	-10.3974
1885	0	Extremo 2A	-2.1E-08	15.504	-9.5E-06	0.9024	-4.5E-06	0.1569
1885	0.3	Extremo 2A	-2.1E-08	17.59	-9.5E-06	0.9024	-1.6E-06	-4.8072
1885	0.6	Extremo 2A	-2.1E-08	19.676	-9.5E-06	0.9024	1.2E-06	-10.3972
1886	0	Extremo 1A	-2.9E-06	40.092	-2.2E-05	3.0617	-1.2E-05	-9.3328
1886	0.5	Extremo 1A	-2.9E-06	44.506	-2.2E-05	3.0617	-1.2E-06	-30.4824
1886	1	Extremo 1A	-2.9E-06	48.92	-2.2E-05	3.0617	9.7E-06	-53.839
1886	0	Extremo 2A	-1.4E-06	40.066	-6.1E-05	3.055	-4.6E-05	-9.3397
1886	0.5	Extremo 2A	-1.4E-06	44.48	-6.1E-05	3.055	-1.5E-05	-30.476
1886	1	Extremo 2A	-1.4E-06	48.894	-6.1E-05	3.055	1.6E-05	-53.8193
1888	0	Extremo 1A	-1.1E-05	-50.603	6.6E-05	-2.7249	3.3E-05	-55.9388
1888	0.5	Extremo 1A	-1.1E-05	-46.189	6.6E-05	-2.7249	3.2E-07	-31.7409
1888	1	Extremo 1A	-1.1E-05	-41.775	6.6E-05	-2.7249	-3.3E-05	-9.75
1888	0	Extremo 2A	-0.00012	-50.562	0.00069	-2.6928	0.00035	-55.8984
1888	0.5	Extremo 2A	-0.00012	-46.148	0.00069	-2.6928	8.2E-06	-31.7211
1888	1	Extremo 2A	-0.00012	-41.733	0.00069	-2.6928	-0.00033	-9.7509
1889	0	Extremo 1A	-1.1E-06	-20.005	1.8E-05	-0.8343	6.6E-06	-10.6195
1889	0.3	Extremo 1A	-1.1E-06	-17.919	1.8E-05	-0.8343	1.2E-06	-4.9308
1889	0.6	Extremo 1A	-1.1E-06	-15.834	1.8E-05	-0.8343	-4.3E-06	0.1322
1889	0	Extremo 2A	-1.2E-05	-20	0.00019	-0.8248	7E-05	-10.6167
1889	0.3	Extremo 2A	-1.2E-05	-17.914	0.00019	-0.8248	1.3E-05	-4.9297
1889	0.6	Extremo 2A	-1.2E-05	-15.828	0.00019	-0.8248	-4.4E-05	0.1316
1890	0	Extremo 1A	-3.2E-07	15.278	-6.3E-06	-0.0006	-1.7E-06	0.2176
1890	0.3	Extremo 1A	-3.2E-07	17.364	-6.3E-06	-0.0006	1.5E-07	-4.6787
1890	0.6	Extremo 1A	-3.2E-07	19.45	-6.3E-06	-0.0006	2E-06	-10.2009
1890	0	Extremo 2A	3.7E-07	15.277	-5.9E-06	0.004	-4.4E-06	0.2162
1890	0.3	Extremo 2A	3.7E-07	17.363	-5.9E-06	0.004	-2.6E-06	-4.6799
1890	0.6	Extremo 2A	3.7E-07	19.449	-5.9E-06	0.004	-8.3E-07	-10.2017
1891	0	Extremo 1A	-3.4E-06	38.998	-2.6E-05	0.0022	-1.5E-05	-8.5741
1891	0.5	Extremo 1A	-3.4E-06	43.412	-2.6E-05	0.0022	-1.6E-06	-29.1769
1891	1	Extremo 1A	-3.4E-06	47.827	-2.6E-05	0.0022	1.1E-05	-51.9866
1891	0	Extremo 2A	2.3E-06	38.978	-5.6E-05	0.014	-4.8E-05	-8.5852
1891	0.5	Extremo 2A	2.3E-06	43.392	-5.6E-05	0.014	-2E-05	-29.1777
1891	1	Extremo 2A	2.3E-06	47.806	-5.6E-05	0.014	8.2E-06	-51.9772
1893	0	Extremo 1A	-1.5E-05	-50.011	8.5E-05	-0.0102	4.3E-05	-54.4113
1893	0.5	Extremo 1A	-1.5E-05	-45.597	8.5E-05	-0.0102	4.7E-07	-30.5094
1893	1	Extremo 1A	-1.5E-05	-41.183	8.5E-05	-0.0102	-4.2E-05	-8.8144
1893	0	Extremo 2A	-0.00016	-49.973	0.0009	0.0101	0.00046	-54.3795
1893	0.5	Extremo 2A	-0.00016	-45.559	0.0009	0.0101	1.1E-05	-30.4965
1893	1	Extremo 2A	-0.00016	-41.145	0.0009	0.0101	-0.00044	-8.8205
1894	0	Extremo 1A	-1.4E-06	-19.81	2.3E-05	-0.0023	8.6E-06	-10.4224
1894	0.3	Extremo 1A	-1.4E-06	-17.724	2.3E-05	-0.0023	1.5E-06	-4.7923
1894	0.6	Extremo 1A	-1.4E-06	-15.638	2.3E-05	-0.0023	-5.5E-06	0.212
1894	0	Extremo 2A	-1.6E-05	-19.805	0.00025	0.0035	9.2E-05	-10.4207
1894	0.3	Extremo 2A	-1.6E-05	-17.719	0.00025	0.0035	1.7E-05	-4.792
1894	0.6	Extremo 2A	-1.6E-05	-15.634	0.00025	0.0035	-5.8E-05	0.211
1895	0	Extremo 1A	-3.7E-07	15.506	-7.4E-06	-0.9046	-2.1E-06	0.158
1895	0.3	Extremo 1A	-3.7E-07	17.592	-7.4E-06	-0.9046	1.4E-07	-4.8068
1895	0.6	Extremo 1A	-3.7E-07	19.678	-7.4E-06	-0.9046	2.4E-06	-10.3974
1895	0	Extremo 2A	1E-06	15.504	8.2E-07	-0.8944	-3.7E-06	0.157
1895	0.3	Extremo 2A	1E-06	17.59	8.2E-07	-0.8944	-4E-06	-4.8072
1895	0.6	Extremo 2A	1E-06	19.676	8.2E-07	-0.8944	-4.2E-06	-10.3972
1896	0	Extremo 1A	-3.9E-06	40.092	-3.1E-05	-3.0572	-1.8E-05	-9.3329
1896	0.5	Extremo 1A	-3.9E-06	44.506	-3.1E-05	-3.0572	-2.1E-06	-30.4825
1896	1	Extremo 1A	-3.9E-06	48.92	-3.1E-05	-3.0572	1.3E-05	-53.8391
1896	0	Extremo 2A	8.4E-06	40.065	-4.3E-05	-3.0271	-4.8E-05	-9.3397
1896	0.5	Extremo 2A	8.4E-06	44.48	-4.3E-05	-3.0271	-2.7E-05	-30.4759
1896	1	Extremo 2A	8.4E-06	48.894	-4.3E-05	-3.0271	-5.1E-06	-53.8192
1898	0	Extremo 1A	-1.9E-05	-50.603	0.00011	2.7044	5.6E-05	-55.9388
1898	0.5	Extremo 1A	-1.9E-05	-46.189	0.00011	2.7044	6.9E-07	-31.7409
1898	1	Extremo 1A	-1.9E-05	-41.775	0.00011	2.7044	-5.5E-05	-9.7501
1898	0	Extremo 2A	-0.00021	-50.562	0.00117	2.7129	0.0006	-55.8985
1898	0.5	Extremo 2A	-0.00021	-46.148	0.00117	2.7129	1.6E-05	-31.7212
1898	1	Extremo 2A	-0.00021	-41.734	0.00117	2.7129	-0.00057	-9.7509
1899	0	Extremo 1A	-1.9E-06	-20.005	3E-05	0.8298	1.1E-05	-10.6195
1899	0.3	Extremo 1A	-1.9E-06	-17.919	3E-05	0.8298	2E-06	-4.9308
1899	0.6	Extremo 1A	-1.9E-06	-15.834	3E-05	0.8298	-7.1E-06	0.1322
1899	0	Extremo 2A	-2E-05	-20	0.00033	0.8318	0.00012	-10.6168
1899	0.3	Extremo 2A	-2E-05	-17.914	0.00033	0.8318	2.3E-05	-4.9297
1899	0.6	Extremo 2A	-2E-05	-15.828	0.00033	0.8318	-7.6E-05	0.1316
1900	0	Extremo 1A	-4.1E-07	15.553	-8.6E-06	-1.058	-2.5E-06	-0.0076
1900	0.3	Extremo 1A	-4.1E-07	17.639	-8.6E-06	-1.058	1.1E-07	-4.9863
1900	0.6	Extremo 1A	-4.1E-07	19.725	-8.6E-06	-1.058	2.7E-06	-10.5908
1900	0	Extremo 2A	2E-06	15.55	1.2E-05	-1.0464	-2.3E-06	-0.0077
1900	0.3	Extremo 2A	2E-06	17.636	1.2E-05	-1.0464	-5.9E-06	-4.9857
1900	0.6	Extremo 2A	2E-06	19.722	1.2E-05	-1.0464	-9.6E-06	-10.5895
1901	0	Extremo 1A	-4.5E-06	37.887	-3.7E-05	-2.7062	-2.1E-05	-10.7755
1901	0.5	Extremo 1A	-4.5E-06	42.301	-3.7E-05	-2.7062	-2.8E-06	-30.8225
1901	1	Extremo 1A	-4.5E-06	46.715	-3.7E-05	-2.7062	1.6E-05	-53.0766
1901	0	Extremo 2A	1.8E-05	37.872	-1.6E-05	-2.6768	-4.3E-05	-10.774
1901	0.5	Extremo 2A	1.8E-05	42.287	-1.6E-05	-2.6768	-3.5E-05	-30.8138
1901	1	Extremo 2A	1.8E-05	46.701	-1.6E-05	-2.6768	-2.7E-05	-53.0606
1903	0	Extremo 1A	-2.5E-05	-47.005	0.00014	1.4059	7.3E-05	-53.887
1903	0.5	Extremo 1A	-2.5E-05	-42.59	0.00014	1.4059	1E-06	-31.4882
1903	1	Extremo 1A	-2.5E-05	-38.176	0.00014	1.4059	-7.1E-05	-11.2965
1903	0	Extremo 2A	-0.00027	-46.984	0.00154	1.425	0.00079	-53.8584
1903	0.5	Extremo 2A	-0.00027	-42.57	0.00154	1.425	2.2E-05	-31.4701
1903	1	Extremo 2A	-0.00027	-38.156	0.00154	1.425	-0.00075	-11.2888
1904	0	Extremo 1A	-2.4E-06	-19.895	4E-05	0.76	1.5E-05	-10.7434
1904	0.3	Extremo 1A	-2.4E-06	-17.809	4E-05	0.76	2.6E-06	-5.0879
1904	0.6	Extremo 1A	-2.4E-06	-15.723	4E-05	0.76	-9.3E-06	-0.0582
1904	0	Extremo 2A	-2.7E-05	-19.89	0.00043	0.7633	0.00016	-10.74
1904	0.3	Extremo 2A	-2.7E-05	-17.804	0.00043	0.7633	3E-05	-5.086
1904	0.6	Extremo 2A	-2.7E-05	-15.718	0.00043	0.7633	-9.9E-05	-0.0577
1905	0	Extremo 1A	-4.5E-07	15.385	-9.9E-06	-0.7622	-2.9E-06	-0.0802
1905	0.3	Extremo 1A	-4.5E-07	17.471	-9.9E-06	-0.7622	5.6E-08	-5.0087
1905	0.6	Extremo 1A	-4.5E-07	19.557	-9.9E-06	-0.7622	3E-06	-10.563
1905	0	Extremo 2A	3.5E-06	15.384	3E-05	-0.7518	3.4E-07	-0.0798
1905	0.3	Extremo 2A	3.5E-06	17.47	3E-05	-0.7518	-8.7E-06	-5.0078
1905	0.6	Extremo 2A	3.5E-06	19.556	3E-05	-0.7518	-1.8E-05	-10.5617
1906	0	Extremo 1A	-5E-06	36.055	-4.3E-05	-1.4729	-2.5E-05	-11.1474
1906	0.5	Extremo 1A	-5E-06	40.47	-4.3E-05	-1.4729	-3.7E-06	-30.2787
1906	1	Extremo 1A	-5E-06	44.884	-4.3E-05	-1.4729	1.8E-05	-51.617
1906	0	Extremo 2A	3.2E-05	36.051	3.1E-05	-1.4494	-3.1E-05	-11.1436

1906	0.5	Extremo 2A	3.2E-05	40.465	3.1E-05	-1.4494	-4.7E-05	-30.2725
1906	1	Extremo 2A	3.2E-05	44.879	3.1E-05	-1.4494	-6.2E-05	-51.6085
1908	0	Extremo 1A	-3.2E-05	-44.477	0.00019	-0.3585	9.5E-05	-51.4405
1908	0.5	Extremo 1A	-3.2E-05	-40.063	0.00019	-0.3585	1.4E-06	-30.3055
1908	1	Extremo 1A	-3.2E-05	-35.649	0.00019	-0.3585	-9.2E-05	-11.3775
1908	0	Extremo 2A	-0.00036	-44.471	0.00201	-0.3263	0.001	-51.426
1908	0.5	Extremo 2A	-0.00036	-40.056	0.00201	-0.3263	3.1E-05	-30.2942
1908	1	Extremo 2A	-0.00036	-35.642	0.00201	-0.3263	-0.00098	-11.3695
1909	0	Extremo 1A	-3.2E-06	-19.559	5.2E-05	0.2824	1.9E-05	-10.5951
1909	0.3	Extremo 1A	-3.2E-06	-17.473	5.2E-05	0.2824	3.4E-06	-5.0404
1909	0.6	Extremo 1A	-3.2E-06	-15.387	5.2E-05	0.2824	-1.2E-05	-0.1114
1909	0	Extremo 2A	-3.5E-05	-19.556	0.00056	0.2892	0.00021	-10.5926
1909	0.3	Extremo 2A	-3.5E-05	-17.47	0.00056	0.2892	4E-05	-5.0387
1909	0.6	Extremo 2A	-3.5E-05	-15.384	0.00056	0.2892	-0.00013	-0.1106
1910	0	Extremo 1A	-4.8E-07	15.225	-1.1E-05	-0.4474	-3.4E-06	-0.0732
1910	0.3	Extremo 1A	-4.8E-07	17.311	-1.1E-05	-0.4474	-4.9E-08	-4.9537
1910	0.6	Extremo 1A	-4.8E-07	19.397	-1.1E-05	-0.4474	3.3E-06	-10.46
1910	0	Extremo 2A	5.6E-06	15.224	5.8E-05	-0.4384	4.8E-06	-0.0729
1910	0.3	Extremo 2A	5.6E-06	17.31	5.8E-05	-0.4384	-1.3E-05	-4.9531
1910	0.6	Extremo 2A	5.6E-06	19.396	5.8E-05	-0.4384	-3E-05	-10.459
1911	0	Extremo 1A	-5.4E-06	35.333	-5E-05	-0.6614	-3E-05	-10.9297
1911	0.5	Extremo 1A	-5.4E-06	39.747	-5E-05	-0.6614	-4.9E-06	-29.6995
1911	1	Extremo 1A	-5.4E-06	44.161	-5E-05	-0.6614	2E-05	-50.6763
1911	0	Extremo 2A	5.4E-05	35.332	0.00011	-0.642	-7.6E-06	-10.9265
1911	0.5	Extremo 2A	5.4E-05	39.746	0.00011	-0.642	-6.2E-05	-29.6958
1911	1	Extremo 2A	5.4E-05	44.16	0.00011	-0.642	-0.00012	-50.6721
1913	0	Extremo 1A	-4.2E-05	-43.558	0.00024	-1.1437	0.00012	-49.9761
1913	0.5	Extremo 1A	-4.2E-05	-39.144	0.00024	-1.1437	2E-06	-29.3004
1913	1	Extremo 1A	-4.2E-05	-34.73	0.00024	-1.1437	-0.00012	-10.8318
1913	0	Extremo 2A	-0.00048	-43.557	0.00265	-1.1041	0.0014	-49.9703
1913	0.5	Extremo 2A	-0.00048	-39.143	0.00265	-1.1041	4.3E-05	-29.2953
1913	1	Extremo 2A	-0.00048	-34.729	0.00265	-1.1041	-0.0013	-10.8273
1914	0	Extremo 1A	-4.1E-06	-19.29	6.7E-05	-0.0684	2.5E-05	-10.3942
1914	0.3	Extremo 1A	-4.1E-06	-17.205	6.7E-05	-0.0684	4.5E-06	-4.9199
1914	0.6	Extremo 1A	-4.1E-06	-15.119	6.7E-05	-0.0684	-1.6E-05	-0.0715
1914	0	Extremo 2A	-4.6E-05	-19.289	0.00074	-0.0589	0.00028	-10.3929
1914	0.3	Extremo 2A	-4.6E-05	-17.203	0.00074	-0.0589	5.3E-05	-4.919
1914	0.6	Extremo 2A	-4.6E-05	-15.117	0.00074	-0.0589	-0.00017	-0.071
1915	0	Extremo 1A	-4.9E-07	15.136	-1.2E-05	-0.2416	-3.9E-06	-0.0487
1915	0.3	Extremo 1A	-4.9E-07	17.222	-1.2E-05	-0.2416	-2.2E-07	-4.9023
1915	0.6	Extremo 1A	-4.9E-07	19.307	-1.2E-05	-0.2416	3.4E-06	-10.3816
1915	0	Extremo 2A	8.8E-06	15.135	1E-04	-0.2339	1.2E-05	-0.0484
1915	0.3	Extremo 2A	8.8E-06	17.221	1E-04	-0.2339	-1.8E-05	-4.9017
1915	0.6	Extremo 2A	8.8E-06	19.307	1E-04	-0.2339	-4.8E-05	-10.3808
1916	0	Extremo 1A	-5.5E-06	35.162	-5.6E-05	-0.2898	-3.5E-05	-10.6759
1916	0.5	Extremo 1A	-5.5E-06	39.576	-5.6E-05	-0.2898	-6.6E-06	-29.3604
1916	1	Extremo 1A	-5.5E-06	43.99	-5.6E-05	-0.2898	2.2E-05	-50.252
1916	0	Extremo 2A	8.5E-05	35.161	0.00023	-0.2728	3.3E-05	-10.6731
1916	0.5	Extremo 2A	8.5E-05	39.575	0.00023	-0.2728	-8.1E-05	-29.3574
1916	1	Extremo 2A	8.5E-05	43.99	0.00023	-0.2728	-0.0002	-50.2486
1918	0	Extremo 1A	-5.5E-05	-43.333	0.00032	-1.1548	0.00016	-49.2867
1918	0.5	Extremo 1A	-5.5E-05	-38.919	0.00032	-1.1548	2.9E-06	-28.7238
1918	1	Extremo 1A	-5.5E-05	-34.505	0.00032	-1.1548	-0.00015	-10.3679
1918	0	Extremo 2A	-0.00063	-43.333	0.00348	-1.1126	0.0018	-49.2857
1918	0.5	Extremo 2A	-0.00063	-38.919	0.00348	-1.1126	6E-05	-28.7227
1918	1	Extremo 2A	-0.00063	-34.505	0.00348	-1.1126	-0.0017	-10.3666
1919	0	Extremo 1A	-5.4E-06	-19.142	8.8E-05	-0.1915	3.2E-05	-10.2567
1919	0.3	Extremo 1A	-5.4E-06	-17.056	8.8E-05	-0.1915	5.9E-06	-4.827
1919	0.6	Extremo 1A	-5.4E-06	-14.97	8.8E-05	-0.1915	-2E-05	-0.023
1919	0	Extremo 2A	-6.1E-05	-19.142	0.00098	-0.1808	0.00036	-10.2564
1919	0.3	Extremo 2A	-6.1E-05	-17.056	0.00098	-0.1808	7E-05	-4.8267
1919	0.6	Extremo 2A	-6.1E-05	-14.97	0.00098	-0.1808	-0.00022	-0.0228
1920	0	Extremo 1A	-4.5E-07	15.098	-1.3E-05	-0.1192	-4.4E-06	-0.0321
1920	0.3	Extremo 1A	-4.5E-07	17.183	-1.3E-05	-0.1192	-5E-07	-4.8742
1920	0.6	Extremo 1A	-4.5E-07	19.269	-1.3E-05	-0.1192	3.4E-06	-10.3421
1920	0	Extremo 2A	1.3E-05	15.096	0.00016	-0.1128	2.3E-05	-0.0316
1920	0.3	Extremo 2A	1.3E-05	17.182	0.00016	-0.1128	-2.6E-05	-4.8735
1920	0.6	Extremo 2A	1.3E-05	19.268	0.00016	-0.1128	-7.4E-05	-10.3411
1921	0	Extremo 1A	-5.3E-06	35.153	-6.3E-05	-0.1265	-4E-05	-10.5341
1921	0.5	Extremo 1A	-5.3E-06	39.567	-6.3E-05	-0.1265	-8.7E-06	-29.2141
1921	1	Extremo 1A	-5.3E-06	43.981	-6.3E-05	-0.1265	2.3E-05	-50.1012
1921	0	Extremo 2A	0.00013	35.152	0.00041	-0.1121	9.8E-05	-10.5306
1921	0.5	Extremo 2A	0.00013	39.566	0.00041	-0.1121	-0.00011	-29.2099
1921	1	Extremo 2A	0.00013	43.98	0.00041	-0.1121	-0.00031	-50.0962
1923	0	Extremo 1A	-7.2E-05	-43.294	0.00041	-0.7945	0.00021	-48.9981
1923	0.5	Extremo 1A	-7.2E-05	-38.88	0.00041	-0.7945	4.1E-06	-28.4545
1923	1	Extremo 1A	-7.2E-05	-34.466	0.00041	-0.7945	-0.0002	-10.1179
1923	0	Extremo 2A	-0.00083	-43.295	0.00458	-0.7527	0.0024	-49.0004
1923	0.5	Extremo 2A	-0.00083	-38.881	0.00458	-0.7527	8.4E-05	-28.4563
1923	1	Extremo 2A	-0.00083	-34.467	0.00458	-0.7527	-0.0022	-10.1192
1924	0	Extremo 1A	-7E-06	-19.074	0.00011	-0.1636	4.2E-05	-10.1863
1924	0.3	Extremo 1A	-7E-06	-16.988	0.00011	-0.1636	7.7E-06	-4.777
1924	0.6	Extremo 1A	-7E-06	-14.902	0.00011	-0.1636	-2.7E-05	0.0066
1924	0	Extremo 2A	-8.1E-05	-19.074	0.00129	-0.1529	0.00048	-10.1867
1924	0.3	Extremo 2A	-8.1E-05	-16.989	0.00129	-0.1529	9.3E-05	-4.7773
1924	0.6	Extremo 2A	-8.1E-05	-14.903	0.00129	-0.1529	-0.00029	0.0064
1925	0	Extremo 1A	-3.5E-07	15.085	-1.3E-05	-0.0358	-4.8E-06	-0.0251
1925	0.3	Extremo 1A	-3.5E-07	17.171	-1.3E-05	-0.0358	-9.2E-07	-4.8635
1925	0.6	Extremo 1A	-3.5E-07	19.257	-1.3E-05	-0.0358	2.9E-06	-10.3278
1925	0	Extremo 2A	2E-05	15.083	0.00025	-0.0312	3.9E-05	-0.0245
1925	0.3	Extremo 2A	2E-05	17.169	0.00025	-0.0312	-3.6E-05	-4.8624
1925	0.6	Extremo 2A	2E-05	19.255	0.00025	-0.0312	-0.00011	-10.3261
1926	0	Extremo 1A	-4.4E-06	35.166	-6.7E-05	-0.0289	-4.5E-05	-10.4806
1926	0.5	Extremo 1A	-4.4E-06	39.58	-6.7E-05	-0.0289	-1.2E-05	-29.167
1926	1	Extremo 1A	-4.4E-06	43.994	-6.7E-05	-0.0289	2.2E-05	-50.0605
1926	0	Extremo 2A	0.00019	35.163	0.00068	-0.019	0.0002	-10.4751
1926	0.5	Extremo 2A	0.00019	39.577	0.00068	-0.019	-0.00014	-29.1599
1926	1	Extremo 2A	0.00019	43.991	0.00068	-0.019	-0.00048	-50.0519
1928	0	Extremo 1A	-9.4E-05	-43.29	0.00054	-0.2943	0.00027	-48.8957
1928	0.5	Extremo 1A	-9.4E-05	-38.876	0.00054	-0.2943	5.8E-06	-28.3541
1928	1	Extremo 1A	-9.4E-05	-34.462	0.00054	-0.2943	-0.00026	-10.0194
1928	0	Extremo 2A	-0.0011	-43.292	0.00603	-0.2553	0.0031	-48.9018
1928	0.5	Extremo 2A	-0.0011	-38.878	0.00603	-0.2553	0.00012	-28.3592
1928	1	Extremo 2A	-0.0011	-34.464	0.00603	-0.2553	-0.0029	-10.0237
1929	0	Extremo 1A	-9.2E-06	-19.049	0.00015	-0.0648	5.5E-05	-10.1587
1929	0.3	Extremo 1A	-9.2E-06	-16.963	0.00015	-0.0648	1E-05	-4.757
1929	0.6	Extremo 1A	-9.2E-06	-14.877	0.00015	-0.0648	-3.5E-05	0.0189
1929	0	Extremo 2A	-0.00011	-19.05	0.0017	-0.0553	0.00063	-10.16
1929	0.3	Extremo 2A	-0.00011	-16.964	0.0017	-0.0553	0.00012	-4.7579
1929	0.6	Extremo 2A	-0.00011	-14.878	0.0017	-0.0553	-0.00039	0.0184
1930	0	Extremo 1A	-1.4E-07	15.085	-1.2E-05	0.0373	-5E-06	-0.025
1930	0.3	Extremo 1A	-1.4E-07	17.171	-1.2E-05	0.0373	-1.6E-06	-4.8634
1930	0.6	Extremo 1A	-1.4E-07	19.257	-1.2E-05	0.0373	1.9E-06	-10.3276
1930	0	Extremo 2A	2.9E-05	15.082	0.00038	0.0389	6.3E-05	-0.024
1930	0.3	Extremo 2A	2.9E-05	17.168	0.00038	0.0389	-5.1E-05	-4.8616
1930	0.6	Extremo 2A	2.9E-05	19.254	0.00038	0.0389	-0.00016	-10.3249
1931	0	Extremo 1A	-2.6E-06	35.167	-6.9E-05	0.0567	-0.00005	-10.48
1931	0.5	Extremo 1A	-2.6E-06	39.581	-6.9E-05	0.0567	-1.5E-05	-29.1669
1931	1	Extremo 1A	-2.6E-06	43.995	-6.9E-05	0.0567	1.9E-05	-50.0608
1931	0	Extremo 2A	0.00029	35.161	0.00108	0.0588	0.00035	-10.4712
1931	0.5	Extremo 2A	0.00029	39.575	0.00108	0.0588	-0.00019	-29.1551
1931	1	Extremo 2A	0.00029	43.989	0.00108	0.0588	-0.00073	-50.0461
1933	0	Extremo 1A	-0.00012	-43.291	0.0007	0.2402	0.00036	-48.8944
1933	0.5	Extremo 1A	-0.00012	-38.876	0.0007	0.2402	8.2E-06	-28.3526
1933	1	Extremo 1A	-0.00012	-34.462	0.0007	0.2402	-0.00034	-10.0179
1933	0	Extremo 2A	-0.00145	-43.294	0.00796	0.2732	0.0041	-48.9064
1933	0.5	Extremo 2A	-0.00145	-38.88	0.00796	0.2732	0.00016	-28.363
1933	1	Extremo 2A	-0.00145	-34.466	0.00796	0.2732	-0.0038	-10.0266
1934	0	Extremo 1A	-1.2E-05	-19.048	0.0002	0.0539	7.2E-05	-10.1583
1934	0.3	Extremo 1A	-1.2E-05	-16.962	0.0002	0.0539	1.3E-05	-4.7567
1934	0.6	Extremo 1A	-1.2E-05	-14.876	0.0002	0.0539	-4.5E-05	0.0191
1934	0	Extremo 2A	-0.00014	-19.051	0.00225	0.0607	0.00084	-10.1609
1934	0.3	Extremo 2A	-0.00014	-16.965	0.00225	0.0607	0.00016	-4.7585
1934	0.6	Extremo 2A	-0.00014	-14.879	0.00225	0.0607	-0.00051	0.0181
1935	0	Extremo 1A	2.3E-07	15.097	-8.5E-06	0.1202	-5E-06	-0.0316
1935	0.3	Extremo 1A	2.3E-07	17.183	-8.5E-06	0.1202	-2.5E-06	-4.8736
1935	0.6	Extremo 1A	2.3E-07	19.269	-8.5E-06	0.1202	6.6E-08	-10.3414
1935	0	Extremo 2A	4.2E-05	15.092	0.00056	0.117	9.8E-05	-0.0302
1935	0.3	Extremo 2A	4.2E-05	17.178	0.00056	0.117	-7.1E-05	-4.8708
1935	0.6	Extremo 2A	4.2E-05	19.264	0.00056	0.117	-0.00024	-10.3372
1936	0	Extremo 1A	8.3E-07	35.155	-6.6E-05	0.1545	-5.4E-05	-10.5313
1936	0.5	Extremo 1A	8.3E-07	39.569	-6.6E-05	0.1545	-2E-05	-29.2124
1936	1	Extremo 1A	8.3E-07	43.983	-6.6E-05	0.1545	1.3E-05	-50.1006
1936	0	Extremo 2A	0.00041	35.145	0.00165	0.1436	0.00058	-10.5178

1936	0.5	Extremo 2A	0.00041	39.559	0.00165	0.1436	-0.00025	-29.1939
1936	1	Extremo 2A	0.00041	43.973	0.00165	0.1436	-0.0011	-50.077
1938	0	Extremo 1A	-0.00016	-43.295	0.00092	0.7424	0.00047	-48.9925
1938	0.5	Extremo 1A	-0.00016	-38.881	0.00092	0.7424	1.1E-05	-28.4486
1938	1	Extremo 1A	-0.00016	-34.467	0.00092	0.7424	-0.00045	-10.1117
1938	0	Extremo 2A	-0.00193	-43.301	0.011	0.7637	0.0055	-49.0153
1938	0.5	Extremo 2A	-0.00193	-38.887	0.011	0.7637	0.00023	-28.4683
1938	1	Extremo 2A	-0.00193	-34.473	0.011	0.7637	-0.005	-10.1283
1939	0	Extremo 1A	-1.6E-05	-19.073	0.00026	0.1541	9.4E-05	-10.1846
1939	0.3	Extremo 1A	-1.6E-05	-16.987	0.00026	0.1541	1.8E-05	-4.7757
1939	0.6	Extremo 1A	-1.6E-05	-14.901	0.00026	0.1541	-5.9E-05	0.0074
1939	0	Extremo 2A	-0.00019	-19.077	0.00298	0.1557	0.0011	-10.1895
1939	0.3	Extremo 2A	-0.00019	-16.992	0.00298	0.1557	0.00022	-4.7791
1939	0.6	Extremo 2A	-0.00019	-14.906	0.00298	0.1557	-0.00068	0.0054
1940	0	Extremo 1A	8.3E-07	15.134	-2.4E-06	0.2404	-4.5E-06	-0.0476
1940	0.3	Extremo 1A	8.3E-07	17.22	-2.4E-06	0.2404	-3.8E-06	-4.9006
1940	0.6	Extremo 1A	8.3E-07	19.305	-2.4E-06	0.2404	-3.1E-06	-10.3793
1940	0	Extremo 2A	5.9E-05	15.127	0.00082	0.2302	0.00015	-0.0456
1940	0.3	Extremo 2A	5.9E-05	17.213	0.00082	0.2302	-9.8E-05	-4.8965
1940	0.6	Extremo 2A	5.9E-05	19.299	0.00082	0.2302	-0.00034	-10.3732
1941	0	Extremo 1A	6.5E-06	35.164	-5.5E-05	0.316	-5.5E-05	-10.6673
1941	0.5	Extremo 1A	6.5E-06	39.578	-5.5E-05	0.316	-2.7E-05	-29.3528
1941	1	Extremo 1A	6.5E-06	43.992	-5.5E-05	0.316	7.4E-07	-50.2453
1941	0	Extremo 2A	0.00059	35.148	0.00246	0.2847	0.00091	-10.6481
1941	0.5	Extremo 2A	0.00059	39.562	0.00246	0.2847	-0.00032	-29.3255
1941	1	Extremo 2A	0.00059	43.976	0.00246	0.2847	-0.0016	-50.2099
1943	0	Extremo 1A	-0.00021	-43.333	0.0012	1.1096	0.00061	-49.2707
1943	0.5	Extremo 1A	-0.00021	-38.919	0.0012	1.1096	1.6E-05	-28.708
1943	1	Extremo 1A	-0.00021	-34.504	0.0012	1.1096	-0.00058	-10.3522
1943	0	Extremo 2A	-0.00256	-43.345	0.014	1.1082	0.0073	-49.3134
1943	0.5	Extremo 2A	-0.00256	-38.931	0.014	1.1082	0.00031	-28.7446
1943	1	Extremo 2A	-0.00256	-34.516	0.014	1.1082	-0.0067	-10.3828
1944	0	Extremo 1A	-2.1E-05	-19.138	0.00033	0.1863	0.00012	-10.2523
1944	0.3	Extremo 1A	-2.1E-05	-17.052	0.00033	0.1863	2.3E-05	-4.8238
1944	0.6	Extremo 1A	-2.1E-05	-14.966	0.00033	0.1863	-7.7E-05	-0.021
1944	0	Extremo 2A	-0.00025	-19.147	0.00395	0.1781	0.0015	-10.2614
1944	0.3	Extremo 2A	-0.00025	-17.061	0.00395	0.1781	0.00029	-4.8301
1944	0.6	Extremo 2A	-0.00025	-14.975	0.00395	0.1781	-0.00089	-0.0246
1945	0	Extremo 1A	1.8E-06	15.22	8.2E-06	0.4405	-3.3E-06	-0.0711
1945	0.3	Extremo 1A	1.8E-06	17.305	8.2E-06	0.4405	-5.8E-06	-4.9498
1945	0.6	Extremo 1A	1.8E-06	19.391	8.2E-06	0.4405	-8.2E-06	-10.4543
1945	0	Extremo 2A	8.4E-05	15.21	0.00117	0.4207	0.00022	-0.0684
1945	0.3	Extremo 2A	8.4E-05	17.296	0.00117	0.4207	-0.00013	-4.9444
1945	0.6	Extremo 2A	8.4E-05	19.382	0.00117	0.4207	-0.00049	-10.4462
1946	0	Extremo 1A	1.6E-05	35.327	-3.1E-05	0.677	-5.1E-05	-10.9104
1946	0.5	Extremo 1A	1.6E-05	39.741	-3.1E-05	0.677	-3.6E-05	-29.6775
1946	1	Extremo 1A	1.6E-05	44.155	-3.1E-05	0.677	-2E-05	-50.6516
1946	0	Extremo 2A	0.00083	35.303	0.0036	0.6164	0.0014	-10.8851
1946	0.5	Extremo 2A	0.00083	39.718	0.0036	0.6164	-0.00042	-29.6403
1946	1	Extremo 2A	0.00083	44.132	0.0036	0.6164	-0.0022	-50.6026
1948	0	Extremo 1A	-0.00028	-43.55	0.00157	1.119	0.00081	-49.9348
1948	0.5	Extremo 1A	-0.00028	-39.136	0.00157	1.119	2.2E-05	-29.2633
1948	1	Extremo 1A	-0.00028	-34.722	0.00157	1.119	-0.00076	-10.7988
1948	0	Extremo 2A	-0.00341	-43.576	0.018	1.0738	0.0097	-50.0139
1948	0.5	Extremo 2A	-0.00341	-39.162	0.018	1.0738	0.00044	-29.3293
1948	1	Extremo 2A	-0.00341	-34.748	0.018	1.0738	-0.0088	-10.8516
1949	0	Extremo 1A	-2.7E-05	-19.281	0.00044	0.0732	0.00016	-10.3847
1949	0.3	Extremo 1A	-2.7E-05	-17.195	0.00044	0.0732	3.1E-05	-4.9133
1949	0.6	Extremo 1A	-2.7E-05	-15.109	0.00044	0.0732	-0.0001	-0.0677
1949	0	Extremo 2A	-0.00033	-19.297	0.00525	0.0474	0.002	-10.4005
1949	0.3	Extremo 2A	-0.00033	-17.212	0.00525	0.0474	0.00039	-4.9241
1949	0.6	Extremo 2A	-0.00033	-15.126	0.00525	0.0474	-0.0012	-0.0736
1950	0	Extremo 1A	3.2E-06	15.373	2.5E-05	0.745	-9.2E-07	-0.0777
1950	0.3	Extremo 1A	3.2E-06	17.459	2.5E-05	0.745	-8.5E-06	-5.0024
1950	0.6	Extremo 1A	3.2E-06	19.545	2.5E-05	0.745	-1.6E-05	-10.5529
1950	0	Extremo 2A	0.00012	15.362	0.00166	0.7126	0.00032	-0.0741
1950	0.3	Extremo 2A	0.00012	17.448	0.00166	0.7126	-0.00018	-4.9955
1950	0.6	Extremo 2A	0.00012	19.534	0.00166	0.7126	-0.00068	-10.5426
1951	0	Extremo 1A	2.9E-05	36.02	1.2E-05	1.4592	-4.1E-05	-11.1185
1951	0.5	Extremo 1A	2.9E-05	40.434	1.2E-05	1.4592	-4.7E-05	-30.2319
1951	1	Extremo 1A	2.9E-05	44.848	1.2E-05	1.4592	-5.3E-05	-51.5522
1951	0	Extremo 2A	0.00117	35.992	0.0052	1.3601	0.0021	-11.0858
1951	0.5	Extremo 2A	0.00117	40.406	0.0052	1.3601	-0.00055	-30.1854
1951	1	Extremo 2A	0.00117	44.82	0.0052	1.3601	-0.0032	-51.492
1953	0	Extremo 1A	-0.00037	-44.434	0.00206	0.3831	0.0011	-51.3441
1953	0.5	Extremo 1A	-0.00037	-40.02	0.00206	0.3831	3.1E-05	-30.2306
1953	1	Extremo 1A	-0.00037	-35.606	0.00206	0.3831	-0.001	-11.3241
1953	0	Extremo 2A	-0.00454	-44.499	0.025	0.2575	0.0129	-51.4875
1953	0.5	Extremo 2A	-0.00454	-40.085	0.025	0.2575	0.00061	-30.3415
1953	1	Extremo 2A	-0.00454	-35.671	0.025	0.2575	-0.0116	-11.4025
1954	0	Extremo 1A	-3.6E-05	-19.539	0.00058	-0.2591	0.00021	-10.5781
1954	0.3	Extremo 1A	-3.6E-05	-17.453	0.00058	-0.2591	4.1E-05	-5.0292
1954	0.6	Extremo 1A	-3.6E-05	-15.367	0.00058	-0.2591	-0.00013	-0.1062
1954	0	Extremo 2A	-0.00045	-19.567	0.00698	-0.3132	0.0026	-10.603
1954	0.3	Extremo 2A	-0.00045	-17.481	0.00698	-0.3132	0.00053	-5.0457
1954	0.6	Extremo 2A	-0.00045	-15.395	0.00698	-0.3132	-0.0016	-0.1142
1955	0	Extremo 1A	5.3E-06	15.533	5.2E-05	1.031	3.2E-06	-0.008
1955	0.3	Extremo 1A	5.3E-06	17.619	5.2E-05	1.031	-1.2E-05	-4.9808
1955	0.6	Extremo 1A	5.3E-06	19.705	5.2E-05	1.031	-2.8E-05	-10.5794
1955	0	Extremo 2A	0.00016	15.52	0.00234	0.9814	0.00045	-0.0027
1955	0.3	Extremo 2A	0.00016	17.606	0.00234	0.9814	-0.00025	-4.9716
1955	0.6	Extremo 2A	0.00016	19.692	0.00234	0.9814	-0.00095	-10.5662
1956	0	Extremo 1A	5E-05	37.775	8.5E-05	2.6446	-2E-05	-10.7611
1956	0.5	Extremo 1A	5E-05	42.189	8.5E-05	2.6446	-6.2E-05	-30.7522
1956	1	Extremo 1A	5E-05	46.603	8.5E-05	2.6446	-0.0001	-52.9503
1956	0	Extremo 2A	0.00162	37.756	0.00742	2.4962	0.003	-10.7147
1956	0.5	Extremo 2A	0.00162	42.17	0.00742	2.4962	-0.00072	-30.6961
1956	1	Extremo 2A	0.00162	46.584	0.00742	2.4962	-0.0044	-52.8845
1958	0	Extremo 1A	-0.00048	-46.864	0.0027	-1.2953	0.0014	-53.6973
1958	0.5	Extremo 1A	-0.00048	-42.45	0.0027	-1.2953	4.4E-05	-31.3687
1958	1	Extremo 1A	-0.00048	-38.036	0.0027	-1.2953	-0.0013	-11.2471
1958	0	Extremo 2A	-0.00607	-47.018	0.033	-1.5459	0.0171	-53.9359
1958	0.5	Extremo 2A	-0.00607	-42.604	0.033	-1.5459	0.00084	-31.5302
1958	1	Extremo 2A	-0.00607	-38.19	0.033	-1.5459	-0.0154	-11.3316
1959	0	Extremo 1A	-4.7E-05	-19.862	0.00076	-0.7137	0.00028	-10.7209
1959	0.3	Extremo 1A	-4.7E-05	-17.776	0.00076	-0.7137	5.4E-05	-5.0751
1959	0.6	Extremo 1A	-4.7E-05	-15.69	0.00076	-0.7137	-0.00017	-0.0551
1959	0	Extremo 2A	-0.0006	-19.904	0.0093	-0.804	0.0035	-10.7532
1959	0.3	Extremo 2A	-0.0006	-17.818	0.0093	-0.804	0.00071	-5.0949
1959	0.6	Extremo 2A	-0.0006	-15.732	0.0093	-0.804	-0.0021	-0.0623
1960	0	Extremo 1A	8.4E-06	15.488	9.3E-05	0.8857	9.9E-06	0.1509
1960	0.3	Extremo 1A	8.4E-06	17.574	9.3E-05	0.8857	-1.8E-05	-4.8085
1960	0.6	Extremo 1A	8.4E-06	19.66	9.3E-05	0.8857	-4.6E-05	-10.3936
1960	0	Extremo 2A	0.00022	15.472	0.00326	0.8101	0.00064	0.1587
1960	0.3	Extremo 2A	0.00022	17.558	0.00326	0.8101	-0.00034	-4.7957
1960	0.6	Extremo 2A	0.00022	19.644	0.00326	0.8101	-0.0013	-10.3759
1961	0	Extremo 1A	8.1E-05	39.889	0.0002	2.9825	1.7E-05	-9.3766
1961	0.5	Extremo 1A	8.1E-05	44.303	0.0002	2.9825	-8.3E-05	-30.4247
1961	1	Extremo 1A	8.1E-05	48.717	0.0002	2.9825	-0.00018	-53.6799
1961	0	Extremo 2A	0.00223	39.885	0.01	2.7603	0.0043	-9.3068
1961	0.5	Extremo 2A	0.00223	44.299	0.01	2.7603	-0.00093	-30.3529
1961	1	Extremo 2A	0.00223	48.713	0.01	2.7603	-0.0062	-53.6059
1963	0	Extremo 1A	-0.00064	-50.323	0.00355	-2.5273	0.0018	-55.6708
1963	0.5	Extremo 1A	-0.00064	-45.909	0.00355	-2.5273	6.1E-05	-31.6127
1963	1	Extremo 1A	-0.00064	-41.495	0.00355	-2.5273	-0.0017	-9.7617
1963	0	Extremo 2A	-0.00812	-50.597	0.043	-2.9021	0.0229	-55.9883
1963	0.5	Extremo 2A	-0.00812	-46.183	0.043	-2.9021	0.0012	-31.7932
1963	1	Extremo 2A	-0.00812	-41.769	0.043	-2.9021	-0.0205	-9.8052
1964	0	Extremo 1A	-6.3E-05	-19.969	0.001	-0.7767	0.00037	-10.6021
1964	0.3	Extremo 1A	-6.3E-05	-17.883	0.001	-0.7767	7.1E-05	-4.9243
1964	0.6	Extremo 1A	-6.3E-05	-15.797	0.001	-0.7767	-0.00023	0.1278
1964	0	Extremo 2A	-0.0008	-20.017	0.012	-0.8942	0.0047	-10.6328
1964	0.3	Extremo 2A	-0.0008	-17.931	0.012	-0.8942	0.00095	-4.9406
1964	0.6	Extremo 2A	-0.0008	-15.845	0.012	-0.8942	-0.0028	0.1258
1965	0	Extremo 1A	1.3E-05	15.269	0.00015	0.0202	2E-05	0.2082
1965	0.3	Extremo 1A	1.3E-05	17.355	0.00015	0.0202	-2.5E-05	-4.6855
1965	0.6	Extremo 1A	1.3E-05	19.441	0.00015	0.0202	-7.1E-05	-10.2049
1965	0	Extremo 2A	0.0003	15.249	0.0045	-0.0923	0.0009	0.2168
1965	0.3	Extremo 2A	0.0003	17.335	0.0045	-0.0923	-0.00045	-4.6709
1965	0.6	Extremo 2A	0.0003	19.421	0.0045	-0.0923	-0.0018	-10.1843
1966	0	Extremo 1A	0.00013	38.84	0.00038	0.0482	7.9E-05	-8.6484
1966	0.5	Extremo 1A	0.00013	43.254	0.00038	0.0482	-0.00011	-29.1717
1966	1	Extremo 1A	0.00013	47.668	0.00038	0.0482	-0.0003	-51.902
1966	0	Extremo 2A	0.00305	38.818	0.015	-0.2969	0.0061	-8.5682

1966	0.5	Extremo 2A	0.00305	43.232	0.015	-0.2969	-0.0012	-29.0807
1966	1	Extremo 2A	0.00305	47.646	0.015	-0.2969	-0.0085	-51.8003
1968	0	Extremo 1A	-0.00084	-49.755	0.00467	0.0963	0.0024	-54.2037
1968	0.5	Extremo 1A	-0.00084	-45.341	0.00467	0.0963	8.4E-05	-30.4297
1968	1	Extremo 1A	-0.00084	-40.927	0.00467	0.0963	-0.0023	-8.8628
1968	0	Extremo 2A	-0.011	-50.015	0.058	-0.2891	0.0306	-54.4813
1968	0.5	Extremo 2A	-0.011	-45.601	0.058	-0.2891	0.0016	-30.5771
1968	1	Extremo 2A	-0.011	-41.187	0.058	-0.2891	-0.0273	-8.88
1969	0	Extremo 1A	-8.3E-05	-19.781	0.00132	0.0267	0.00049	-10.4127
1969	0.3	Extremo 1A	-8.3E-05	-17.695	0.00132	0.0267	9.4E-05	-4.7913
1969	0.6	Extremo 1A	-8.3E-05	-15.609	0.00132	0.0267	-0.0003	0.2044
1969	0	Extremo 2A	-0.00107	-19.824	0.017	-0.0925	0.0063	-10.4382
1969	0.3	Extremo 2A	-0.00107	-17.738	0.017	-0.0925	0.0013	-4.8039
1969	0.6	Extremo 2A	-0.00107	-15.652	0.017	-0.0925	-0.0037	0.2047
1970	0	Extremo 1A	1.9E-05	15.488	0.00024	-0.8454	3.6E-05	0.151
1970	0.3	Extremo 1A	1.9E-05	17.574	0.00024	-0.8454	-3.6E-05	-4.8083
1970	0.6	Extremo 1A	1.9E-05	19.66	0.00024	-0.8454	-0.00011	-10.3934
1970	0	Extremo 2A	0.00041	15.473	0.00618	-0.9942	0.0013	0.1585
1970	0.3	Extremo 2A	0.00041	17.559	0.00618	-0.9942	-0.0006	-4.7962
1970	0.6	Extremo 2A	0.00041	19.645	0.00618	-0.9942	-0.0025	-10.3767
1971	0	Extremo 1A	0.00019	39.889	0.00064	-2.8865	0.00018	-9.3759
1971	0.5	Extremo 1A	0.00019	44.303	0.00064	-2.8865	-0.00014	-30.4238
1971	1	Extremo 1A	0.00019	48.717	0.00064	-2.8865	-0.00046	-53.6787
1971	0	Extremo 2A	0.00413	39.887	0.02	-3.3529	0.0086	-9.3094
1971	0.5	Extremo 2A	0.00413	44.301	0.02	-3.3529	-0.0015	-30.3562
1971	1	Extremo 2A	0.00413	48.715	0.02	-3.3529	-0.0116	-53.61
1973	0	Extremo 1A	-0.00112	-50.323	0.00615	2.7198	0.0032	-55.6711
1973	0.5	Extremo 1A	-0.00112	-45.909	0.00615	2.7198	0.00012	-31.613
1973	1	Extremo 1A	-0.00112	-41.495	0.00615	2.7198	-0.003	-9.7619
1973	0	Extremo 2A	-0.015	-50.597	0.077	2.3241	0.041	-55.9877
1973	0.5	Extremo 2A	-0.015	-46.183	0.077	2.3241	0.0023	-31.7927
1973	1	Extremo 2A	-0.015	-41.769	0.077	2.3241	-0.0364	-9.8046
1974	0	Extremo 1A	-0.00011	-19.969	0.00174	0.8301	0.00065	-10.6021
1974	0.3	Extremo 1A	-0.00011	-17.883	0.00174	0.8301	0.00013	-4.9243
1974	0.6	Extremo 1A	-0.00011	-15.797	0.00174	0.8301	-0.0004	0.1277
1974	0	Extremo 2A	-0.00144	-20.017	0.022	0.7093	0.0084	-10.6326
1974	0.3	Extremo 2A	-0.00144	-17.931	0.022	0.7093	0.0017	-4.9405
1974	0.6	Extremo 2A	-0.00144	-15.845	0.022	0.7093	-0.0049	0.1259
1975	0	Extremo 1A	2.8E-05	15.533	0.00037	-0.9912	6E-05	-0.0078
1975	0.3	Extremo 1A	2.8E-05	17.618	0.00037	-0.9912	-5E-05	-4.9804
1975	0.6	Extremo 1A	2.8E-05	19.704	0.00037	-0.9912	-0.00016	-10.5788
1975	0	Extremo 2A	0.00055	15.522	0.0084	-1.1638	0.0017	-0.0033
1975	0.3	Extremo 2A	0.00055	17.608	0.0084	-1.1638	-0.00079	-4.9728
1975	0.6	Extremo 2A	0.00055	19.694	0.0084	-1.1638	-0.0033	-10.568
1976	0	Extremo 1A	0.00028	37.774	0.00103	-2.5498	0.00032	-10.7594
1976	0.5	Extremo 1A	0.00028	42.188	0.00103	-2.5498	-0.00019	-30.75
1976	1	Extremo 1A	0.00028	46.602	0.00103	-2.5498	-0.0007	-52.9476
1976	0	Extremo 2A	0.00556	37.759	0.028	-3.0846	0.012	-10.7204
1976	0.5	Extremo 2A	0.00556	42.173	0.028	-3.0846	-0.0019	-30.7036
1976	1	Extremo 2A	0.00556	46.588	0.028	-3.0846	-0.0158	-52.8938
1978	0	Extremo 1A	-0.00148	-46.864	0.00812	1.4874	0.0042	-53.698
1978	0.5	Extremo 1A	-0.00148	-42.45	0.00812	1.4874	0.00016	-31.3693
1978	1	Extremo 1A	-0.00148	-38.036	0.00812	1.4874	-0.0039	-11.2477
1978	0	Extremo 2A	-0.02	-47.018	0.104	0.9687	0.055	-53.9344
1978	0.5	Extremo 2A	-0.02	-42.604	0.104	0.9687	0.0032	-31.5287
1978	1	Extremo 2A	-0.02	-38.19	0.104	0.9687	-0.0486	-11.3301
1979	0	Extremo 1A	-0.00014	-19.862	0.00229	0.7669	0.00086	-10.7211
1979	0.3	Extremo 1A	-0.00014	-17.776	0.00229	0.7669	0.00017	-5.0753
1979	0.6	Extremo 1A	-0.00014	-15.691	0.00229	0.7669	-0.00052	-0.0552
1979	0	Extremo 2A	-0.00194	-19.904	0.03	0.6195	0.0113	-10.7528
1979	0.3	Extremo 2A	-0.00194	-17.818	0.03	0.6195	0.0023	-5.0946
1979	0.6	Extremo 2A	-0.00194	-15.732	0.03	0.6195	-0.0066	-0.0621
1980	0	Extremo 1A	4.1E-05	15.372	0.00055	-0.7062	9.4E-05	-0.0773
1980	0.3	Extremo 1A	4.1E-05	17.458	0.00055	-0.7062	-7E-05	-5.0017
1980	0.6	Extremo 1A	4.1E-05	19.544	0.00055	-0.7062	-0.00023	-10.5519
1980	0	Extremo 2A	0.00073	15.365	0.011	-0.8917	0.0024	-0.0752
1980	0.3	Extremo 2A	0.00073	17.451	0.011	-0.8917	-0.001	-4.9976
1980	0.6	Extremo 2A	0.00073	19.537	0.011	-0.8917	-0.0044	-10.5458
1981	0	Extremo 1A	0.0004	36.018	0.00159	-1.3668	0.00054	-11.1154
1981	0.5	Extremo 1A	0.0004	40.432	0.00159	-1.3668	-0.00025	-30.2278
1981	1	Extremo 1A	0.0004	44.846	0.00159	-1.3668	-0.001	-51.5473
1981	0	Extremo 2A	0.00742	35.999	0.038	-1.9401	0.0165	-11.096
1981	0.5	Extremo 2A	0.00742	40.413	0.038	-1.9401	-0.0024	-30.1989
1981	1	Extremo 2A	0.00742	44.827	0.038	-1.9401	-0.0214	-51.5088
1983	0	Extremo 1A	-0.00196	-44.434	0.011	-0.1917	0.0056	-51.3457
1983	0.5	Extremo 1A	-0.00196	-40.02	0.011	-0.1917	0.00023	-30.232
1983	1	Extremo 1A	-0.00196	-35.606	0.011	-0.1917	-0.0051	-11.3254
1983	0	Extremo 2A	-0.027	-44.499	0.139	-0.8326	0.074	-51.4841
1983	0.5	Extremo 2A	-0.027	-40.085	0.139	-0.8326	0.0045	-30.3383
1983	1	Extremo 2A	-0.027	-35.671	0.139	-0.8326	-0.065	-11.3995
1984	0	Extremo 1A	-0.00019	-19.539	0.00304	0.312	0.0011	-10.5784
1984	0.3	Extremo 1A	-0.00019	-17.454	0.00304	0.312	0.00022	-5.0295
1984	0.6	Extremo 1A	-0.00019	-15.368	0.00304	0.312	-0.00069	-0.1063
1984	0	Extremo 2A	-0.00262	-19.566	0.04	0.1296	0.0152	-10.6021
1984	0.3	Extremo 2A	-0.00262	-17.481	0.04	0.1296	0.0032	-5.045
1984	0.6	Extremo 2A	-0.00262	-15.395	0.04	0.1296	-0.0089	-0.1138
1985	0	Extremo 1A	5.8E-05	15.218	0.0008	-0.4035	0.00014	-0.0705
1985	0.3	Extremo 1A	5.8E-05	17.304	0.0008	-0.4035	-9.7E-05	-4.9487
1985	0.6	Extremo 1A	5.8E-05	19.39	0.0008	-0.4035	-0.00034	-10.4526
1985	0	Extremo 2A	0.00097	15.216	0.015	-0.5941	0.0032	-0.0703
1985	0.3	Extremo 2A	0.00097	17.302	0.015	-0.5941	-0.0014	-4.948
1985	0.6	Extremo 2A	0.00097	19.388	0.015	-0.5941	-0.0059	-10.4516
1986	0	Extremo 1A	0.00058	35.324	0.00239	-0.589	0.00087	-10.9049
1986	0.5	Extremo 1A	0.00058	39.738	0.00239	-0.589	-0.00033	-29.6704
1986	1	Extremo 1A	0.00058	44.152	0.00239	-0.589	-0.0015	-50.6428
1986	0	Extremo 2A	0.00983	35.315	0.051	-1.182	0.0226	-10.9022
1986	0.5	Extremo 2A	0.00983	39.729	0.051	-1.182	-0.003	-29.6631
1986	1	Extremo 2A	0.00983	44.143	0.051	-1.182	-0.0286	-50.631
1988	0	Extremo 1A	-0.00261	-43.551	0.014	-0.9293	0.0074	-49.9382
1988	0.5	Extremo 1A	-0.00261	-39.137	0.014	-0.9293	0.00032	-29.2663
1988	1	Extremo 1A	-0.00261	-34.723	0.014	-0.9293	-0.0068	-10.8015
1988	0	Extremo 2A	-0.036	-43.575	0.187	-1.6447	0.0998	-50.0068
1988	0.5	Extremo 2A	-0.036	-39.161	0.187	-1.6447	0.0063	-29.3227
1988	1	Extremo 2A	-0.036	-34.747	0.187	-1.6447	-0.0871	-10.8456
1989	0	Extremo 1A	-0.00026	-19.282	0.00402	-0.0212	0.0015	-10.3854
1989	0.3	Extremo 1A	-0.00026	-17.196	0.00402	-0.0212	0.0003	-4.9138
1989	0.6	Extremo 1A	-0.00026	-15.11	0.00402	-0.0212	-0.00091	-0.068
1989	0	Extremo 2A	-0.00354	-19.296	0.054	-0.2291	0.0205	-10.3988
1989	0.3	Extremo 2A	-0.00354	-17.21	0.054	-0.2291	0.0043	-4.9229
1989	0.6	Extremo 2A	-0.00354	-15.124	0.054	-0.2291	-0.0119	-0.0728
1990	0	Extremo 1A	8.3E-05	15.131	0.00115	-0.2064	0.00021	-0.0465
1990	0.3	Extremo 1A	8.3E-05	17.216	0.00115	-0.2064	-0.00013	-4.8986
1990	0.6	Extremo 1A	8.3E-05	19.302	0.00115	-0.2064	-0.00048	-10.3764
1990	0	Extremo 2A	0.00127	15.136	0.02	-0.3943	0.0043	-0.0486
1990	0.3	Extremo 2A	0.00127	17.222	0.02	-0.3943	-0.0018	-4.9024
1990	0.6	Extremo 2A	0.00127	19.308	0.02	-0.3943	-0.0078	-10.3819
1991	0	Extremo 1A	0.00082	35.158	0.00352	-0.2355	0.0013	-10.658
1991	0.5	Extremo 1A	0.00082	39.572	0.00352	-0.2355	-0.00043	-29.3407
1991	1	Extremo 1A	0.00082	43.986	0.00352	-0.2355	-0.0022	-50.2304
1991	0	Extremo 2A	0.013	35.167	0.069	-0.826	0.0307	-10.6757
1991	0.5	Extremo 2A	0.013	39.581	0.069	-0.826	-0.0037	-29.3625
1991	1	Extremo 2A	0.013	43.995	0.069	-0.826	-0.038	-50.2563
1993	0	Extremo 1A	-0.00347	-43.334	0.019	-0.9233	0.0098	-49.2777
1993	0.5	Extremo 1A	-0.00347	-38.92	0.019	-0.9233	0.00044	-28.7141
1993	1	Extremo 1A	-0.00347	-34.506	0.019	-0.9233	-0.009	-10.3575
1993	0	Extremo 2A	-0.049	-43.342	0.252	-1.6709	0.1349	-49.2995
1993	0.5	Extremo 2A	-0.049	-38.928	0.252	-1.6709	0.0089	-28.732
1993	1	Extremo 2A	-0.049	-34.514	0.252	-1.6709	-0.1171	-10.3717
1994	0	Extremo 1A	-0.00034	-19.14	0.00534	-0.1359	0.002	-10.2539
1994	0.3	Extremo 1A	-0.00034	-17.054	0.00534	-0.1359	0.0004	-4.8249
1994	0.6	Extremo 1A	-0.00034	-14.968	0.00534	-0.1359	-0.0012	-0.0217
1994	0	Extremo 2A	-0.00479	-19.144	0.073	-0.3562	0.0278	-10.2582
1994	0.3	Extremo 2A	-0.00479	-17.058	0.073	-0.3562	0.0059	-4.8278
1994	0.6	Extremo 2A	-0.00479	-14.972	0.073	-0.3562	-0.016	-0.0232
1995	0	Extremo 1A	0.00012	15.092	0.00164	-0.0913	0.00031	-0.0299
1995	0.3	Extremo 1A	0.00012	17.178	0.00164	-0.0913	-0.00018	-4.8704
1995	0.6	Extremo 1A	0.00012	19.264	0.00164	-0.0913	-0.00067	-10.3367
1995	0	Extremo 2A	0.00164	15.107	0.027	-0.2662	0.0057	-0.035
1995	0.3	Extremo 2A	0.00164	17.193	0.027	-0.2662	-0.0022	-4.88
1995	0.6	Extremo 2A	0.00164	19.279	0.027	-0.2662	-0.0102	-10.3508
1996	0	Extremo 1A	0.00115	35.146	0.0051	-0.087	0.002	-10.5159
1996	0.5	Extremo 1A	0.00115	39.56	0.0051	-0.087	-0.00056	-29.1922
1996	1	Extremo 1A	0.00115	43.974	0.0051	-0.087	-0.0031	-50.0756
1996	0	Extremo 2A	0.017	35.176	0.092	-0.6454	0.0414	-10.561

1996	0.5	Extremo 2A	0.017	39.59	0.092	-0.6454	-0.0044	-29.2524
1996	1	Extremo 2A	0.017	44.004	0.092	-0.6454	-0.0501	-50.1508
1998	0	Extremo 1A	-0.00462	-43.298	0.025	-0.5627	0.0131	-49.0063
1998	0.5	Extremo 1A	-0.00462	-38.884	0.025	-0.5627	0.00061	-28.4607
1998	1	Extremo 1A	-0.00462	-34.47	0.025	-0.5627	-0.0119	-10.122
1998	0	Extremo 2A	-0.066	-43.295	0.34	-1.3106	0.1826	-48.9892
1998	0.5	Extremo 2A	-0.066	-38.881	0.34	-1.3106	0.0125	-28.4451
1998	1	Extremo 2A	-0.066	-34.467	0.34	-1.3106	-0.1576	-10.108
1999	0	Extremo 1A	-0.00045	-19.076	0.0071	-0.1069	0.0027	-10.1876
1999	0.3	Extremo 1A	-0.00045	-16.99	0.0071	-0.1069	0.00053	-4.7779
1999	0.6	Extremo 1A	-0.00045	-14.904	0.0071	-0.1069	-0.0016	0.0061
1999	0	Extremo 2A	-0.00649	-19.072	0.099	-0.3271	0.0375	-10.1837
1999	0.3	Extremo 2A	-0.00649	-16.986	0.099	-0.3271	0.008	-4.775
1999	0.6	Extremo 2A	-0.00649	-14.9	0.099	-0.3271	-0.0216	0.0078
2000	0	Extremo 1A	0.00016	15.077	0.00231	-0.0169	0.00045	-0.0223
2000	0.3	Extremo 1A	0.00016	17.163	0.00231	-0.0169	-0.00025	-4.8582
2000	0.6	Extremo 1A	0.00016	19.249	0.00231	-0.0169	-0.00094	-10.32
2000	0	Extremo 2A	0.00212	15.105	0.035	-0.1651	0.0076	-0.0312
2000	0.3	Extremo 2A	0.00212	17.191	0.035	-0.1651	-0.0028	-4.8755
2000	0.6	Extremo 2A	0.00212	19.277	0.035	-0.1651	-0.0133	-10.3456
2001	0	Extremo 1A	0.00161	35.15	0.0073	-0.0111	0.0029	-10.4554
2001	0.5	Extremo 1A	0.00161	39.564	0.0073	-0.0111	-0.00073	-29.1341
2001	1	Extremo 1A	0.00161	43.978	0.0073	-0.0111	-0.0044	-50.0198
2001	0	Extremo 2A	0.022	35.209	0.121	-0.4981	0.0554	-10.5368
2001	0.5	Extremo 2A	0.022	39.624	0.121	-0.4981	-0.005	-29.2451
2001	1	Extremo 2A	0.022	44.038	0.121	-0.4981	-0.0655	-50.1604
2003	0	Extremo 1A	-0.00617	-43.297	0.033	-0.0738	0.0174	-48.9214
2003	0.5	Extremo 1A	-0.00617	-38.883	0.033	-0.0738	0.00085	-28.3762
2003	1	Extremo 1A	-0.00617	-34.469	0.033	-0.0738	-0.0157	-10.038
2003	0	Extremo 2A	-0.089	-43.283	0.46	-0.7913	0.2476	-48.8592
2003	0.5	Extremo 2A	-0.089	-38.869	0.46	-0.7913	0.0174	-28.3213
2003	1	Extremo 2A	-0.089	-34.455	0.46	-0.7913	-0.2128	-9.9905
2004	0	Extremo 1A	-0.00061	-19.054	0.00946	-0.0128	0.0036	-10.1643
2004	0.3	Extremo 1A	-0.00061	-16.968	0.00946	-0.0128	0.00072	-4.7609
2004	0.6	Extremo 1A	-0.00061	-14.882	0.00946	-0.0128	-0.0021	0.0167
2004	0	Extremo 2A	-0.00877	-19.041	0.133	-0.2201	0.0506	-10.1505
2004	0.3	Extremo 2A	-0.00877	-16.955	0.133	-0.2201	0.0107	-4.7511
2004	0.6	Extremo 2A	-0.00877	-14.869	0.133	-0.2201	-0.0292	0.0224
2005	0	Extremo 1A	0.00022	15.072	0.00323	0.043	0.00063	-0.021
2005	0.3	Extremo 1A	0.00022	17.158	0.00323	0.043	-0.00034	-4.8556
2005	0.6	Extremo 1A	0.00022	19.244	0.00323	0.043	-0.0013	-10.316
2005	0	Extremo 2A	0.00273	15.117	0.045	-0.0606	0.01	-0.0349
2005	0.3	Extremo 2A	0.00273	17.203	0.045	-0.0606	-0.0035	-4.8828
2005	0.6	Extremo 2A	0.00273	19.289	0.045	-0.0606	-0.0171	-10.3565
2006	0	Extremo 1A	0.00222	35.138	0.01	0.0385	0.0042	-10.443
2006	0.5	Extremo 1A	0.00222	39.552	0.01	0.0385	-0.00094	-29.1157
2006	1	Extremo 1A	0.00222	43.967	0.01	0.0385	-0.0061	-49.9955
2006	0	Extremo 2A	0.028	35.238	0.158	-0.3241	0.0736	-10.5712
2006	0.5	Extremo 2A	0.028	39.652	0.158	-0.3241	-0.0056	-29.2938
2006	1	Extremo 2A	0.028	44.066	0.158	-0.3241	-0.0849	-50.2234
2008	0	Extremo 1A	-0.00825	-43.303	0.044	0.435	0.0232	-48.948
2008	0.5	Extremo 1A	-0.00825	-38.889	0.044	0.435	0.0012	-28.3998
2008	1	Extremo 1A	-0.00825	-34.475	0.044	0.435	-0.0209	-10.0586
2008	0	Extremo 2A	-0.12	-43.273	0.623	-0.2111	0.3353	-48.819
2008	0.5	Extremo 2A	-0.12	-38.858	0.623	-0.2111	0.0237	-28.2863
2008	1	Extremo 2A	-0.12	-34.444	0.623	-0.2111	-0.288	-9.9605
2009	0	Extremo 1A	-0.00081	-19.06	0.013	0.0937	0.0047	-10.1704
2009	0.3	Extremo 1A	-0.00081	-16.974	0.013	0.0937	0.00096	-4.7652
2009	0.6	Extremo 1A	-0.00081	-14.888	0.013	0.0937	-0.0028	0.0142
2009	0	Extremo 2A	-0.012	-19.032	0.179	-0.083	0.0678	-10.1418
2009	0.3	Extremo 2A	-0.012	-16.946	0.179	-0.083	0.0143	-4.7451
2009	0.6	Extremo 2A	-0.012	-14.86	0.179	-0.083	-0.0393	0.0259
2010	0	Extremo 1A	0.0003	15.079	0.00447	0.1069	0.00089	-0.0264
2010	0.3	Extremo 1A	0.0003	17.165	0.00447	0.1069	-0.00045	-4.8629
2010	0.6	Extremo 1A	0.0003	19.251	0.00447	0.1069	-0.0018	-10.3252
2010	0	Extremo 2A	0.00351	15.144	0.059	0.0704	0.0131	-0.046
2010	0.3	Extremo 2A	0.00351	17.23	0.059	0.0704	-0.0045	-4.9021
2010	0.6	Extremo 2A	0.00351	19.316	0.059	0.0704	-0.022	-10.3839
2011	0	Extremo 1A	0.00303	35.108	0.014	0.0794	0.006	-10.4807
2011	0.5	Extremo 1A	0.00303	39.522	0.014	0.0794	-0.0012	-29.1382
2011	1	Extremo 1A	0.00303	43.936	0.014	0.0794	-0.0084	-50.0027
2011	0	Extremo 2A	0.036	35.265	0.206	-0.0882	0.097	-10.6652
2011	0.5	Extremo 2A	0.036	39.679	0.206	-0.0882	-0.006	-29.4011
2011	1	Extremo 2A	0.036	44.093	0.206	-0.0882	-0.109	-50.3439
2013	0	Extremo 1A	-0.011	-43.319	0.059	0.8843	0.0311	-49.0991
2013	0.5	Extremo 1A	-0.011	-38.905	0.059	0.8843	0.0017	-28.543
2013	1	Extremo 1A	-0.011	-34.491	0.059	0.8843	-0.0278	-10.1939
2013	0	Extremo 2A	-0.161	-43.264	0.842	0.377	0.4519	-48.859
2013	0.5	Extremo 2A	-0.161	-38.85	0.842	0.377	0.0308	-28.3304
2013	1	Extremo 2A	-0.161	-34.436	0.842	0.377	-0.3904	-10.0088
2014	0	Extremo 1A	-0.00109	-19.096	0.017	0.1689	0.0064	-10.2088
2014	0.3	Extremo 1A	-0.00109	-17.01	0.017	0.1689	0.0013	-4.7928
2014	0.6	Extremo 1A	-0.00109	-14.924	0.017	0.1689	-0.0038	-0.0026
2014	0	Extremo 2A	-0.016	-19.044	0.237	0.0516	0.0896	-10.1554
2014	0.3	Extremo 2A	-0.016	-16.958	0.237	0.0516	0.0183	-4.7551
2014	0.6	Extremo 2A	-0.016	-14.872	0.237	0.0516	-0.0529	0.0195
2015	0	Extremo 1A	0.00041	15.11	0.00614	0.2027	0.0012	-0.0416
2015	0.3	Extremo 1A	0.00041	17.196	0.00614	0.2027	-0.0006	-4.8876
2015	0.6	Extremo 1A	0.00041	19.282	0.00614	0.2027	-0.0024	-10.3593
2015	0	Extremo 2A	0.00444	15.199	0.076	0.2591	0.017	-0.067
2015	0.3	Extremo 2A	0.00444	17.285	0.076	0.2591	-0.0057	-4.9397
2015	0.6	Extremo 2A	0.00444	19.371	0.076	0.2591	-0.0284	-10.4381
2016	0	Extremo 1A	0.00412	35.093	0.02	0.16	0.0085	-10.6072
2016	0.5	Extremo 1A	0.00412	39.507	0.02	0.16	-0.0016	-29.2571
2016	1	Extremo 1A	0.00412	43.921	0.02	0.16	-0.0116	-50.114
2016	0	Extremo 2A	0.046	35.324	0.265	0.2753	0.1263	-10.8515
2016	0.5	Extremo 2A	0.046	39.738	0.265	0.2753	-0.006	-29.6171
2016	1	Extremo 2A	0.046	44.152	0.265	0.2753	-0.1384	-50.5897
2018	0	Extremo 1A	-0.015	-43.383	0.079	1.1426	0.0416	-49.4813
2018	0.5	Extremo 1A	-0.015	-38.969	0.079	1.1426	0.0023	-28.8931
2018	1	Extremo 1A	-0.015	-34.555	0.079	1.1426	-0.037	-10.512
2018	0	Extremo 2A	-0.208	-43.279	1.129	0.8984	0.6005	-49.0408
2018	0.5	Extremo 2A	-0.208	-38.865	1.129	0.8984	0.0358	-28.505
2018	1	Extremo 2A	-0.208	-34.45	1.129	0.8984	-0.5288	-10.1763
2019	0	Extremo 1A	-0.00146	-19.185	0.023	0.1513	0.0085	-10.2991
2019	0.3	Extremo 1A	-0.00146	-17.099	0.023	0.1513	0.0018	-4.8566
2019	0.6	Extremo 1A	-0.00146	-15.013	0.023	0.1513	-0.005	-0.0399
2019	0	Extremo 2A	-0.02	-19.088	0.308	0.144	0.1146	-10.2026
2019	0.3	Extremo 2A	-0.02	-17.002	0.308	0.144	0.0221	-4.7891
2019	0.6	Extremo 2A	-0.02	-14.916	0.308	0.144	-0.0704	-0.0013
2020	0	Extremo 1A	0.00055	15.195	0.00837	0.3758	0.0017	-0.065
2020	0.3	Extremo 1A	0.00055	17.281	0.00837	0.3758	-0.0008	-4.9364
2020	0.6	Extremo 1A	0.00055	19.367	0.00837	0.3758	-0.0033	-10.4337
2020	0	Extremo 2A	0.00523	15.306	0.097	0.5502	0.0218	-0.0949
2020	0.3	Extremo 2A	0.00523	17.392	0.097	0.5502	-0.0073	-4.9997
2020	0.6	Extremo 2A	0.00523	19.478	0.097	0.5502	-0.0364	-10.5302
2021	0	Extremo 1A	0.00555	35.242	0.028	0.4239	0.0119	-10.8501
2021	0.5	Extremo 1A	0.00555	39.656	0.028	0.4239	-0.002	-29.5748
2021	1	Extremo 1A	0.00555	44.071	0.028	0.4239	-0.0158	-50.5066
2021	0	Extremo 2A	0.054	35.557	0.333	0.917	0.1606	-11.1445
2021	0.5	Extremo 2A	0.054	39.971	0.333	0.917	-0.0059	-30.0267
2021	1	Extremo 2A	0.054	44.386	0.333	0.917	-0.1724	-51.116
2023	0	Extremo 1A	-0.02	-43.677	0.105	0.9271	0.0559	-50.3497
2023	0.5	Extremo 1A	-0.02	-39.263	0.105	0.9271	0.0032	-29.6145
2023	1	Extremo 1A	-0.02	-34.849	0.105	0.9271	-0.0494	-11.0864
2023	0	Extremo 2A	-0.247	-43.364	1.479	1.1862	0.7693	-49.5
2023	0.5	Extremo 2A	-0.247	-38.95	1.479	1.1862	0.0296	-28.9217
2023	1	Extremo 2A	-0.247	-34.536	1.479	1.1862	-0.7102	-10.5504
2024	0	Extremo 1A	-0.00197	-19.369	0.03	-0.0555	0.0115	-10.47
2024	0.3	Extremo 1A	-0.00197	-17.284	0.03	-0.0555	0.0024	-4.972
2024	0.6	Extremo 1A	-0.00197	-15.198	0.03	-0.0555	-0.0067	-0.0999
2024	0	Extremo 2A	-0.022	-19.19	0.381	0.1257	0.1369	-10.3072
2024	0.3	Extremo 2A	-0.022	-17.104	0.381	0.1257	0.0227	-4.8631
2024	0.6	Extremo 2A	-0.022	-15.018	0.381	0.1257	-0.0915	-0.0449
2025	0	Extremo 1A	0.00073	15.356	0.011	0.6523	0.0023	-0.0691
2025	0.3	Extremo 1A	0.00073	17.442	0.011	0.6523	-0.001	-4.9887
2025	0.6	Extremo 1A	0.00073	19.528	0.011	0.6523	-0.0044	-10.5341
2025	0	Extremo 2A	0.00489	15.48	0.12	0.9627	0.0267	-0.1013
2025	0.3	Extremo 2A	0.00489	17.566	0.12	0.9627	-0.0093	-5.0581
2025	0.6	Extremo 2A	0.00489	19.652	0.12	0.9627	-0.0452	-10.6407
2026	0	Extremo 1A	0.00742	35.985	0.038	1.1136	0.0164	-11.0522
2026	0.5	Extremo 1A	0.00742	40.399	0.038	1.1136	-0.0025	-30.1481
2026	1	Extremo 1A	0.00742	44.813	0.038	1.1136	-0.0213	-51.451
2026	0	Extremo 2A	0.05	36.362	0.401	2.0619	0.1948	-11.3725

2026	0.5	Extremo 2A	0.05	40.776	0.401	2.0619	-0.0058	-30.6568
2026	1	Extremo 2A	0.05	45.19	0.401	2.0619	-0.2064	-52.1482
2028	0	Extremo 1A	-0.027	-44.795	0.141	-0.2452	0.0751	-52.1395
2028	0.5	Extremo 1A	-0.027	-40.381	0.141	-0.2452	0.0045	-30.8457
2028	1	Extremo 1A	-0.027	-35.967	0.141	-0.2452	-0.066	-11.7589
2028	0	Extremo 2A	-0.22	-43.645	1.827	0.8591	0.898	-50.4592
2028	0.5	Extremo 2A	-0.22	-39.231	1.827	0.8591	-0.0154	-29.74
2028	1	Extremo 2A	-0.22	-34.817	1.827	0.8591	-0.9287	-11.2279
2029	0	Extremo 1A	-0.00265	-19.697	0.041	-0.5435	0.0154	-10.7164
2029	0.3	Extremo 1A	-0.00265	-17.611	0.041	-0.5435	0.0032	-5.1203
2029	0.6	Extremo 1A	-0.00265	-15.525	0.041	-0.5435	-0.009	-0.1499
2029	0	Extremo 2A	-0.018	-19.398	0.421	-0.121	0.1402	-10.4974
2029	0.3	Extremo 2A	-0.018	-17.312	0.421	-0.121	0.0139	-4.991
2029	0.6	Extremo 2A	-0.018	-15.226	0.421	-0.121	-0.1124	-0.1104
2030	0	Extremo 1A	0.00097	15.526	0.015	0.8931	0.0032	0.0128
2030	0.3	Extremo 1A	0.00097	17.612	0.015	0.8931	-0.0014	-4.9578
2030	0.6	Extremo 1A	0.00097	19.698	0.015	0.8931	-0.0059	-10.5543
2030	0	Extremo 2A	0.00213	15.647	0.136	1.3456	0.03	-0.0192
2030	0.3	Extremo 2A	0.00213	17.733	0.136	1.3456	-0.0107	-5.0262
2030	0.6	Extremo 2A	0.00213	19.819	0.136	1.3456	-0.0515	-10.659
2031	0	Extremo 1A	0.00984	37.936	0.051	2.2068	0.0225	-10.6169
2031	0.5	Extremo 1A	0.00984	42.35	0.051	2.2068	-0.0031	-30.6884
2031	1	Extremo 1A	0.00984	46.764	0.051	2.2068	-0.0286	-52.967
2031	0	Extremo 2A	0.022	38.304	0.447	3.6412	0.2174	-10.9345
2031	0.5	Extremo 2A	0.022	42.718	0.447	3.6412	-0.0059	-31.19
2031	1	Extremo 2A	0.022	47.132	0.447	3.6412	-0.2292	-53.6525
2033	0	Extremo 1A	-0.036	-47.8	0.19	-2.6194	0.1012	-55.0789
2033	0.5	Extremo 1A	-0.036	-43.386	0.19	-2.6194	0.0064	-32.2827
2033	1	Extremo 1A	-0.036	-38.971	0.19	-2.6194	-0.0885	-11.6934
2033	0	Extremo 2A	-0.09	-45.557	1.977	-0.9671	0.8267	-52.7593
2033	0.5	Extremo 2A	-0.09	-41.143	1.977	-0.9671	-0.1616	-31.0844
2033	1	Extremo 2A	-0.09	-36.729	1.977	-0.9671	-1.1499	-11.6166
2034	0	Extremo 1A	-0.00359	-20.102	0.055	-1.1946	0.0208	-10.9002
2034	0.3	Extremo 1A	-0.00359	-18.016	0.055	-1.1946	0.0044	-5.1824
2034	0.6	Extremo 1A	-0.00359	-15.93	0.055	-1.1946	-0.0121	-0.0904
2034	0	Extremo 2A	-0.00691	-19.791	0.392	-0.6725	0.1087	-10.7229
2034	0.3	Extremo 2A	-0.00691	-17.705	0.392	-0.6725	-0.009	-5.0983
2034	0.6	Extremo 2A	-0.00691	-15.62	0.392	-0.6725	-0.1266	-0.0996
2035	0	Extremo 1A	0.00127	15.468	0.02	0.6332	0.0043	0.1945
2035	0.3	Extremo 1A	0.00127	17.554	0.02	0.6332	-0.0018	-4.7588
2035	0.6	Extremo 1A	0.00127	19.64	0.02	0.6332	-0.0078	-10.338
2035	0	Extremo 2A	-0.00213	15.571	0.136	1.222	0.03	0.1648
2035	0.3	Extremo 2A	-0.00213	17.657	0.136	1.222	-0.0107	-4.8193
2035	0.6	Extremo 2A	-0.00213	19.743	0.136	1.222	-0.0515	-10.4292
2036	0	Extremo 1A	0.013	40.311	0.069	2.2905	0.0306	-9.0281
2036	0.5	Extremo 1A	0.013	44.725	0.069	2.2905	-0.0037	-30.2872
2036	1	Extremo 1A	0.013	49.139	0.069	2.2905	-0.0381	-53.7533
2036	0	Extremo 2A	-0.022	40.582	0.447	4.1882	0.2174	-9.3189
2036	0.5	Extremo 2A	-0.022	44.997	0.447	4.1882	-0.0059	-30.7137
2036	1	Extremo 2A	-0.022	49.411	0.447	4.1882	-0.2292	-54.3155
2038	0	Extremo 1A	-0.049	-52.047	0.256	-4.4963	0.1368	-57.5325
2038	0.5	Extremo 1A	-0.049	-47.633	0.256	-4.4963	0.009	-32.6126
2038	1	Extremo 1A	-0.049	-43.219	0.256	-4.4963	-0.1189	-9.8997
2038	0	Extremo 2A	0.09	-50.099	1.977	-2.7447	0.8267	-55.441
2038	0.5	Extremo 2A	0.09	-45.685	1.977	-2.7447	-0.1616	-31.495
2038	1	Extremo 2A	0.09	-41.271	1.977	-2.7447	-1.1499	-9.756
2039	0	Extremo 1A	-0.00486	-20.24	0.074	-1.3793	0.0281	-10.7612
2039	0.3	Extremo 1A	-0.00486	-18.154	0.074	-1.3793	0.0059	-5.0021
2039	0.6	Extremo 1A	-0.00486	-16.068	0.074	-1.3793	-0.0163	0.1312
2039	0	Extremo 2A	0.0069	-19.952	0.392	-0.8869	0.1087	-10.5883
2039	0.3	Extremo 2A	0.0069	-17.866	0.392	-0.8869	-0.009	-4.9157
2039	0.6	Extremo 2A	0.0069	-15.78	0.392	-0.8869	-0.1266	0.1312
2040	0	Extremo 1A	0.00165	15.223	0.027	-0.4474	0.0057	0.2577
2040	0.3	Extremo 1A	0.00165	17.309	0.027	-0.4474	-0.0023	-4.6221
2040	0.6	Extremo 1A	0.00165	19.395	0.027	-0.4474	-0.0102	-10.1277
2040	0	Extremo 2A	-0.0049	15.293	0.12	0.2593	0.0267	0.2351
2040	0.3	Extremo 2A	-0.0049	17.379	0.12	0.2593	-0.0093	-4.6657
2040	0.6	Extremo 2A	-0.0049	19.465	0.12	0.2593	-0.0452	-10.1923
2041	0	Extremo 1A	0.017	39.113	0.092	-1.3682	0.0413	-8.2151
2041	0.5	Extremo 1A	0.017	43.527	0.092	-1.3682	-0.0045	-28.8753
2041	1	Extremo 1A	0.017	47.941	0.092	-1.3682	-0.0502	-51.7424
2041	0	Extremo 2A	-0.05	39.271	0.401	0.9329	0.1947	-8.4336
2041	0.5	Extremo 2A	-0.05	43.685	0.401	0.9329	-0.0058	-29.1726
2041	1	Extremo 2A	-0.05	48.099	0.401	0.9329	-0.2064	-52.1188
2043	0	Extremo 1A	-0.067	-51.366	0.345	-1.7007	0.1851	-55.7474
2043	0.5	Extremo 1A	-0.067	-46.952	0.345	-1.7007	0.0126	-31.168
2043	1	Extremo 1A	-0.067	-42.538	0.345	-1.7007	-0.16	-8.7955
2043	0	Extremo 2A	0.22	-50.728	1.827	0.7821	0.8981	-54.5154
2043	0.5	Extremo 2A	0.22	-46.314	1.827	0.7821	-0.0154	-30.2549
2043	1	Extremo 2A	0.22	-41.9	1.827	0.7821	-0.9288	-8.2014
2044	0	Extremo 1A	-0.00658	-20.01	0.1	-0.5114	0.038	-10.5284
2044	0.3	Extremo 1A	-0.00658	-17.924	0.1	-0.5114	0.0081	-4.8383
2044	0.6	Extremo 1A	-0.00658	-15.838	0.1	-0.5114	-0.0219	0.226
2044	0	Extremo 2A	0.018	-19.771	0.421	0.1357	0.1402	-10.3347
2044	0.3	Extremo 2A	0.018	-17.685	0.421	0.1357	0.0139	-4.7163
2044	0.6	Extremo 2A	0.018	-15.599	0.421	0.1357	-0.1125	0.2763
2045	0	Extremo 1A	0.00213	15.491	0.035	-1.5136	0.0076	0.1871
2045	0.3	Extremo 1A	0.00213	17.577	0.035	-1.5136	-0.0029	-4.7732
2045	0.6	Extremo 1A	0.00213	19.663	0.035	-1.5136	-0.0133	-10.3592
2045	0	Extremo 2A	-0.00524	15.514	0.097	-0.7327	0.0218	0.1764
2045	0.3	Extremo 2A	-0.00524	17.6	0.097	-0.7327	-0.0073	-4.7906
2045	0.6	Extremo 2A	-0.00524	19.686	0.097	-0.7327	-0.0364	-10.3834
2046	0	Extremo 1A	0.022	40.36	0.121	-4.9873	0.0553	-9.096
2046	0.5	Extremo 1A	0.022	44.774	0.121	-4.9873	-0.0052	-30.3795
2046	1	Extremo 1A	0.022	49.188	0.121	-4.9873	-0.0657	-53.8701
2046	0	Extremo 2A	-0.054	40.36	0.333	-2.441	0.1606	-9.1922
2046	0.5	Extremo 2A	-0.054	44.774	0.333	-2.441	-0.0059	-30.4759
2046	1	Extremo 2A	-0.054	49.188	0.333	-2.441	-0.1724	-53.9665
2048	0	Extremo 1A	-0.09	-52.027	0.467	1.1215	0.2508	-57.4582
2048	0.5	Extremo 1A	-0.09	-47.613	0.467	1.1215	0.0175	-32.5484
2048	1	Extremo 1A	-0.09	-43.198	0.467	1.1215	-0.2159	-9.8456
2048	0	Extremo 2A	0.247	-52.368	1.48	4.47	0.7695	-57.3686
2048	0.5	Extremo 2A	0.247	-47.954	1.48	4.47	0.0296	-32.2881
2048	1	Extremo 2A	0.247	-43.54	1.48	4.47	-0.7104	-9.4146
2049	0	Extremo 1A	-0.00889	-20.224	0.135	0.3678	0.0513	-10.7452
2049	0.3	Extremo 1A	-0.00889	-18.138	0.135	0.3678	0.0109	-4.9909
2049	0.6	Extremo 1A	-0.00889	-16.052	0.135	0.3678	-0.0296	0.1376
2049	0	Extremo 2A	0.022	-20.158	0.381	1.2719	0.1369	-10.6553
2049	0.3	Extremo 2A	0.022	-18.072	0.381	1.2719	0.0227	-4.9209
2049	0.6	Extremo 2A	0.022	-15.986	0.381	1.2719	-0.0915	0.1877
2050	0	Extremo 1A	0.00275	15.575	0.045	-1.7286	0.01	-0.0027
2050	0.3	Extremo 1A	0.00275	17.661	0.045	-1.7286	-0.0036	-4.9881
2050	0.6	Extremo 1A	0.00275	19.747	0.045	-1.7286	-0.0172	-10.5992
2050	0	Extremo 2A	-0.00445	15.55	0.076	-0.937	0.017	0.0019
2050	0.3	Extremo 2A	-0.00445	17.636	0.076	-0.937	-0.0057	-4.976
2050	0.6	Extremo 2A	-0.00445	19.722	0.076	-0.937	-0.0284	-10.5797
2051	0	Extremo 1A	0.028	38.044	0.159	-4.7782	0.0736	-10.7601
2051	0.5	Extremo 1A	0.028	42.458	0.159	-4.7782	-0.0058	-30.8855
2051	1	Extremo 1A	0.028	46.872	0.159	-4.7782	-0.0852	-53.2179
2051	0	Extremo 2A	-0.046	37.951	0.265	-2.2118	0.1262	-10.7088
2051	0.5	Extremo 2A	-0.046	42.365	0.265	-2.2118	-0.006	-30.7878
2051	1	Extremo 2A	-0.046	46.779	0.265	-2.2118	-0.1383	-53.0739
2053	0	Extremo 1A	-0.122	-47.753	0.632	-0.6662	0.3396	-54.9055
2053	0.5	Extremo 1A	-0.122	-43.339	0.632	-0.6662	0.0238	-32.1323
2053	1	Extremo 1A	-0.122	-38.925	0.632	-0.6662	-0.292	-11.5662
2053	0	Extremo 2A	0.208	-48.083	1.13	2.8119	0.6008	-55.2118
2053	0.5	Extremo 2A	0.208	-43.669	1.13	2.8119	0.0358	-32.274
2053	1	Extremo 2A	0.208	-39.255	1.13	2.8119	-0.5291	-11.5431
2054	0	Extremo 1A	-0.012	-20.065	0.181	0.221	0.0687	-10.8628
2054	0.3	Extremo 1A	-0.012	-17.979	0.181	0.221	0.0144	-5.1561
2054	0.6	Extremo 1A	-0.012	-15.893	0.181	0.221	-0.0399	-0.0753
2054	0	Extremo 2A	0.02	-20.103	0.308	1.2235	0.1146	-10.8769
2054	0.3	Extremo 2A	0.02	-18.017	0.308	1.2235	0.0221	-5.1588
2054	0.6	Extremo 2A	0.02	-15.932	0.308	1.2235	-0.0705	-0.0665
2055	0	Extremo 1A	0.00354	15.436	0.059	-1.4077	0.0131	-0.0938
2055	0.3	Extremo 1A	0.00354	17.522	0.059	-1.4077	-0.0045	-5.0375
2055	0.6	Extremo 1A	0.00354	19.608	0.059	-1.4077	-0.0222	-10.607
2055	0	Extremo 2A	-0.00351	15.368	0.059	-0.668	0.0131	-0.0745
2055	0.3	Extremo 2A	-0.00351	17.454	0.059	-0.668	-0.0045	-4.9977
2055	0.6	Extremo 2A	-0.00351	19.54	0.059	-0.668	-0.022	-10.5466
2056	0	Extremo 1A	0.036	36.17	0.207	-3.4556	0.0971	-11.2828
2056	0.5	Extremo 1A	0.036	40.584	0.207	-3.4556	-0.0062	-30.4714
2056	1	Extremo 1A	0.036	44.998	0.207	-3.4556	-0.1096	-51.867
2056	0	Extremo 2A	-0.036	35.993	0.206	-1.0573	0.0969	-11.0958

2056	0.5	Extremo 2A	-0.036	40.407	0.206	-1.0573	-0.006	-30.1959
2056	1	Extremo 2A	-0.036	44.821	0.206	-1.0573	-0.1089	-51.5031
2058	0	Extremo 1A	-0.163	-44.71	0.853	-2.8562	0.4576	-51.8091
2058	0.5	Extremo 1A	-0.163	-40.296	0.853	-2.8562	0.031	-30.5577
2058	1	Extremo 1A	-0.163	-35.882	0.853	-2.8562	-0.3956	-11.5134
2058	0	Extremo 2A	0.16	-44.92	0.843	0.3848	0.4524	-52.2703
2058	0.5	Extremo 2A	0.16	-40.506	0.843	0.3848	0.0308	-30.9137
2058	1	Extremo 2A	0.16	-36.092	0.843	0.3848	-0.3908	-11.7641
2059	0	Extremo 1A	-0.016	-19.626	0.241	-0.3519	0.0907	-10.6447
2059	0.3	Extremo 1A	-0.016	-17.54	0.241	-0.3519	0.0186	-5.0699
2059	0.6	Extremo 1A	-0.016	-15.454	0.241	-0.3519	-0.0536	-0.1209
2059	0	Extremo 2A	0.016	-19.715	0.238	0.5972	0.0897	-10.7242
2059	0.3	Extremo 2A	0.016	-17.629	0.238	0.5972	0.0184	-5.1225
2059	0.6	Extremo 2A	0.016	-15.543	0.238	0.5972	-0.053	-0.1467
2060	0	Extremo 1A	0.00448	15.312	0.076	-1.0107	0.0171	-0.0995
2060	0.3	Extremo 1A	0.00448	17.398	0.076	-1.0107	-0.0058	-5.006
2060	0.6	Extremo 1A	0.00448	19.484	0.076	-1.0107	-0.0286	-10.5383
2060	0	Extremo 2A	-0.00273	15.201	0.045	-0.3791	0.01	-0.0672
2060	0.3	Extremo 2A	-0.00273	17.287	0.045	-0.3791	-0.0035	-4.9403
2060	0.6	Extremo 2A	-0.00273	19.373	0.045	-0.3791	-0.0171	-10.4392
2061	0	Extremo 1A	0.046	35.532	0.266	-2.4074	0.1266	-11.1777
2061	0.5	Extremo 1A	0.046	39.946	0.266	-2.4074	-0.0064	-30.0471
2061	1	Extremo 1A	0.046	44.36	0.266	-2.4074	-0.1394	-51.1235
2061	0	Extremo 2A	-0.028	35.248	0.158	-0.3437	0.0735	-10.8684
2061	0.5	Extremo 2A	-0.028	39.662	0.158	-0.3437	-0.0056	-29.5961
2061	1	Extremo 2A	-0.028	44.076	0.158	-0.3437	-0.0848	-50.5307
2063	0	Extremo 1A	-0.21	-43.517	1.144	-3.6771	0.608	-49.7459
2063	0.5	Extremo 1A	-0.21	-39.103	1.144	-3.6771	0.0361	-29.0907
2063	1	Extremo 1A	-0.21	-34.689	1.144	-3.6771	-0.5357	-10.6425
2063	0	Extremo 2A	0.12	-43.726	0.624	-0.864	0.3359	-50.4324
2063	0.5	Extremo 2A	0.12	-39.312	0.624	-0.864	0.0237	-29.673
2063	1	Extremo 2A	0.12	-34.898	0.624	-0.864	-0.2885	-11.1206
2064	0	Extremo 1A	-0.02	-19.239	0.312	-0.6946	0.1161	-10.3409
2064	0.3	Extremo 1A	-0.02	-17.153	0.312	-0.6946	0.0224	-4.8821
2064	0.6	Extremo 1A	-0.02	-15.067	0.312	-0.6946	-0.0714	-0.049
2064	0	Extremo 2A	0.012	-19.384	0.179	0.0979	0.068	-10.4815
2064	0.3	Extremo 2A	0.012	-17.298	0.179	0.0979	0.0143	-4.9791
2064	0.6	Extremo 2A	0.012	-15.212	0.179	0.0979	-0.0394	-0.1024
2065	0	Extremo 1A	0.00529	15.265	0.098	-0.6743	0.0219	-0.0851
2065	0.3	Extremo 1A	0.00529	17.351	0.098	-0.6743	-0.0074	-4.9776
2065	0.6	Extremo 1A	0.00529	19.437	0.098	-0.6743	-0.0368	-10.4958
2065	0	Extremo 2A	-0.00212	15.112	0.035	-0.2014	0.0076	-0.0423
2065	0.3	Extremo 2A	-0.00212	17.198	0.035	-0.2014	-0.0028	-4.8888
2065	0.6	Extremo 2A	-0.00212	19.284	0.035	-0.2014	-0.0133	-10.361
2066	0	Extremo 1A	0.054	35.509	0.335	-1.6358	0.1613	-11.0286
2066	0.5	Extremo 1A	0.054	39.923	0.335	-1.6358	-0.0063	-29.8867
2066	1	Extremo 1A	0.054	44.337	0.335	-1.6358	-0.1739	-50.9518
2066	0	Extremo 2A	-0.022	35.095	0.121	-0.0716	0.0553	-10.6127
2066	0.5	Extremo 2A	-0.022	39.509	0.121	-0.0716	-0.0051	-29.2637
2066	1	Extremo 2A	-0.022	43.923	0.121	-0.0716	-0.0655	-50.1219
2068	0	Extremo 1A	-0.25	-42.964	1.499	-3.229	0.7793	-48.3487
2068	0.5	Extremo 1A	-0.25	-38.55	1.499	-3.229	0.03	-27.9702
2068	1	Extremo 1A	-0.25	-34.136	1.499	-3.229	-0.7194	-9.7987
2068	0	Extremo 2A	0.089	-43.401	0.462	-1.1259	0.2484	-49.5226
2068	0.5	Extremo 2A	0.089	-38.987	0.462	-1.1259	0.0174	-28.9254
2068	1	Extremo 2A	0.089	-34.573	0.462	-1.1259	-0.2136	-10.5354
2069	0	Extremo 1A	-0.023	-18.948	0.386	-0.6522	0.1389	-10.0824
2069	0.3	Extremo 1A	-0.023	-16.862	0.386	-0.6522	0.0231	-4.711
2069	0.6	Extremo 1A	-0.023	-14.776	0.386	-0.6522	-0.0927	0.0346
2069	0	Extremo 2A	0.00874	-19.193	0.133	-0.122	0.0508	-10.3063
2069	0.3	Extremo 2A	0.00874	-17.107	0.133	-0.122	0.0108	-4.8614
2069	0.6	Extremo 2A	0.00874	-15.021	0.133	-0.122	-0.0293	-0.0422
2070	0	Extremo 1A	0.00498	15.265	0.121	-0.3778	0.0269	-0.0761
2070	0.3	Extremo 1A	0.00498	17.351	0.121	-0.3778	-0.0094	-4.9685
2070	0.6	Extremo 1A	0.00498	19.437	0.121	-0.3778	-0.0457	-10.4867
2070	0	Extremo 2A	-0.00164	15.078	0.027	-0.1052	0.0057	-0.0261
2070	0.3	Extremo 2A	-0.00164	17.164	0.027	-0.1052	-0.0022	-4.8623
2070	0.6	Extremo 2A	-0.00164	19.25	0.027	-0.1052	-0.0102	-10.3243
2071	0	Extremo 1A	0.051	35.649	0.404	-0.9013	0.1959	-10.9714
2071	0.5	Extremo 1A	0.051	40.063	0.404	-0.9013	-0.0064	-29.8996
2071	1	Extremo 1A	0.051	44.477	0.404	-0.9013	-0.2086	-51.0348
2071	0	Extremo 2A	-0.017	35.105	0.091	0.0093	0.0413	-10.4781
2071	0.5	Extremo 2A	-0.017	39.519	0.091	0.0093	-0.0044	-29.1343
2071	1	Extremo 2A	-0.017	43.933	0.091	0.0093	-0.0501	-49.9975
2073	0	Extremo 1A	-0.225	-41.952	1.852	-1.8525	0.9112	-46.9461
2073	0.5	Extremo 1A	-0.225	-37.537	1.852	-1.8525	-0.0148	-27.0738
2073	1	Extremo 1A	-0.225	-33.123	1.852	-1.8525	-0.9408	-9.4086
2073	0	Extremo 2A	0.066	-43.321	0.342	-0.8862	0.1837	-49.1074
2073	0.5	Extremo 2A	0.066	-38.907	0.342	-0.8862	0.0125	-28.5504
2073	1	Extremo 2A	0.066	-34.493	0.342	-0.8862	-0.1587	-10.2004
2074	0	Extremo 1A	-0.019	-18.706	0.428	-0.3348	0.1429	-9.9089
2074	0.3	Extremo 1A	-0.019	-16.62	0.428	-0.3348	0.0144	-4.61
2074	0.6	Extremo 1A	-0.019	-14.534	0.428	-0.3348	-0.1141	0.063
2074	0	Extremo 2A	0.00645	-19.098	0.099	-0.146	0.0378	-10.2105
2074	0.3	Extremo 2A	0.00645	-17.012	0.099	-0.146	0.008	-4.794
2074	0.6	Extremo 2A	0.00645	-14.926	0.099	-0.146	-0.0218	-0.0033
2075	0	Extremo 1A	0.00226	15.272	0.138	-0.091	0.0303	-0.0721
2075	0.3	Extremo 1A	0.00226	17.358	0.138	-0.091	-0.0109	-4.9667
2075	0.6	Extremo 1A	0.00226	19.444	0.138	-0.091	-0.0522	-10.4872
2075	0	Extremo 2A	-0.00126	15.068	0.02	-0.0439	0.0043	-0.0198
2075	0.3	Extremo 2A	-0.00126	17.154	0.02	-0.0439	-0.0018	-4.8532
2075	0.6	Extremo 2A	-0.00126	19.24	0.02	-0.0439	-0.0078	-10.3123
2076	0	Extremo 1A	0.023	35.753	0.452	-0.1052	0.2192	-10.9566
2076	0.5	Extremo 1A	0.023	40.167	0.452	-0.1052	-0.0066	-29.9363
2076	1	Extremo 1A	0.023	44.581	0.452	-0.1052	-0.2325	-51.1232
2076	0	Extremo 2A	-0.013	35.129	0.069	0.0443	0.0306	-10.4326
2076	0.5	Extremo 2A	-0.013	39.543	0.069	0.0443	-0.0037	-29.1005
2076	1	Extremo 2A	-0.013	43.957	0.069	0.0443	-0.038	-49.9754
2078	0	Extremo 1A	-0.096	-40.612	2.01	-0.4505	0.8442	-45.8972
2078	0.5	Extremo 1A	-0.096	-36.198	2.01	-0.4505	-0.1608	-26.6948
2078	1	Extremo 1A	-0.096	-31.784	2.01	-0.4505	-1.1659	-9.6995
2078	0	Extremo 2A	0.048	-43.291	0.255	-0.4348	0.1363	-48.9264
2078	0.5	Extremo 2A	0.048	-38.877	0.255	-0.4348	0.0089	-28.3842
2078	1	Extremo 2A	0.048	-34.463	0.255	-0.4348	-0.1184	-10.049
2079	0	Extremo 1A	-0.00752	-18.62	0.402	-0.0409	0.1123	-9.89
2079	0.3	Extremo 1A	-0.00752	-16.534	0.402	-0.0409	-0.0083	-4.6169
2079	0.6	Extremo 1A	-0.00752	-14.448	0.402	-0.0409	-0.1288	0.0304
2079	0	Extremo 2A	0.00474	-19.056	0.074	-0.0702	0.0281	-10.1669
2079	0.3	Extremo 2A	0.00474	-16.97	0.074	-0.0702	0.0059	-4.7629
2079	0.6	Extremo 2A	0.00474	-14.884	0.074	-0.0702	-0.0162	0.0152
2080	0	Extremo 1A	-0.00195	15.263	0.138	0.1896	0.0305	-0.0686
2080	0.3	Extremo 1A	-0.00195	17.349	0.138	0.1896	-0.011	-4.9605
2080	0.6	Extremo 1A	-0.00195	19.435	0.138	0.1896	-0.0525	-10.4782
2080	0	Extremo 2A	-0.00096	15.068	0.015	0.0096	0.0032	-0.0193
2080	0.3	Extremo 2A	-0.00096	17.154	0.015	0.0096	-0.0014	-4.8526
2080	0.6	Extremo 2A	-0.00096	19.24	0.015	0.0096	-0.0059	-10.3118
2081	0	Extremo 1A	-0.02	35.738	0.454	0.7151	0.2202	-10.929
2081	0.5	Extremo 1A	-0.02	40.152	0.454	0.7151	-0.0069	-29.9017
2081	1	Extremo 1A	-0.02	44.567	0.454	0.7151	-0.2339	-51.0814
2081	0	Extremo 2A	-0.0098	35.132	0.051	0.0821	0.0225	-10.432
2081	0.5	Extremo 2A	-0.0098	39.546	0.051	0.0821	-0.0031	-29.1016
2081	1	Extremo 2A	-0.0098	43.96	0.051	0.0821	-0.0287	-49.9783
2083	0	Extremo 1A	0.082	-40.608	2.021	0.5829	0.8501	-45.8942
2083	0.5	Extremo 1A	0.082	-36.193	2.021	0.5829	-0.1605	-26.6939
2083	1	Extremo 1A	0.082	-31.779	2.021	0.5829	-1.1711	-9.7007
2083	0	Extremo 2A	0.035	-43.27	0.191	0.0921	0.1017	-48.8666
2083	0.5	Extremo 2A	0.035	-38.856	0.191	0.0921	0.0064	-28.3349
2083	1	Extremo 2A	0.035	-34.442	0.191	0.0921	-0.0889	-10.0103
2084	0	Extremo 1A	0.00608	-18.619	0.405	0.1393	0.1135	-9.8896
2084	0.3	Extremo 1A	0.00608	-16.533	0.405	0.1393	-0.008	-4.6166
2084	0.6	Extremo 1A	0.00608	-14.448	0.405	0.1393	-0.1295	0.0305
2084	0	Extremo 2A	0.00347	-19.043	0.055	0.0439	0.0209	-10.1545
2084	0.3	Extremo 2A	0.00347	-16.957	0.055	0.0439	0.0044	-4.7544
2084	0.6	Extremo 2A	0.00347	-14.872	0.055	0.0439	-0.0121	0.02
2085	0	Extremo 1A	-0.00464	15.233	0.123	0.451	0.0273	-0.0626
2085	0.3	Extremo 1A	-0.00464	17.319	0.123	0.451	-0.0097	-4.9453
2085	0.6	Extremo 1A	-0.00464	19.405	0.123	0.451	-0.0467	-10.4538
2085	0	Extremo 2A	-0.00073	15.074	0.011	0.0691	0.0024	-0.022
2085	0.3	Extremo 2A	-0.00073	17.16	0.011	0.0691	-0.0011	-4.8569
2085	0.6	Extremo 2A	-0.00073	19.246	0.011	0.0691	-0.0045	-10.3177
2086	0	Extremo 1A	-0.048	35.609	0.412	1.4698	0.199	-10.867
2086	0.5	Extremo 1A	-0.048	40.023	0.412	1.4698	-0.0071	-29.7752
2086	1	Extremo 1A	-0.048	44.437	0.412	1.4698	-0.2131	-50.8903
2086	0	Extremo 2A	-0.00736	35.124	0.038	0.1395	0.0164	-10.4582

2086	0.5	Extremo 2A	-0.00736	39.538	0.038	0.1395	-0.0025	-29.1237
2086	1	Extremo 2A	-0.00736	43.952	0.038	0.1395	-0.0215	-49.9962
2088	0	Extremo 1A	0.209	-41.951	1.886	1.9691	0.9294	-46.9378
2088	0.5	Extremo 1A	0.209	-37.537	1.886	1.9691	-0.0138	-27.066
2088	1	Extremo 1A	0.209	-33.123	1.886	1.9691	-0.9569	-9.4011
2088	0	Extremo 2A	0.026	-43.26	0.144	0.6121	0.0765	-48.9069
2088	0.5	Extremo 2A	0.026	-38.846	0.144	0.6121	0.0046	-28.3803
2088	1	Extremo 2A	0.026	-34.432	0.144	0.6121	-0.0674	-10.0607
2089	0	Extremo 1A	0.017	-18.703	0.438	0.4328	0.1467	-9.9049
2089	0.3	Extremo 1A	0.017	-16.617	0.438	0.4328	0.0152	-4.6069
2089	0.6	Extremo 1A	0.017	-14.531	0.438	0.4328	-0.1163	0.0653
2089	0	Extremo 2A	0.00253	-19.054	0.042	0.155	0.0157	-10.1669
2089	0.3	Extremo 2A	0.00253	-16.969	0.042	0.155	0.0033	-4.7634
2089	0.6	Extremo 2A	0.00253	-14.883	0.042	0.155	-0.0092	0.0142
2090	0	Extremo 1A	-0.00486	15.189	0.102	0.6754	0.0227	-0.0501
2090	0.3	Extremo 1A	-0.00486	17.275	0.102	0.6754	-0.0079	-4.9196
2090	0.6	Extremo 1A	-0.00486	19.361	0.102	0.6754	-0.0385	-10.4149
2090	0	Extremo 2A	-0.00054	15.088	0.00849	0.1433	0.0017	-0.0235
2090	0.3	Extremo 2A	-0.00054	17.174	0.00849	0.1433	-0.00082	-4.8628
2090	0.6	Extremo 2A	-0.00054	19.26	0.00849	0.1433	-0.0034	-10.3278
2091	0	Extremo 1A	-0.05	35.455	0.349	2.0931	0.167	-10.7586
2091	0.5	Extremo 1A	-0.05	39.869	0.349	2.0931	-0.0075	-29.5897
2091	1	Extremo 1A	-0.05	44.283	0.349	2.0931	-0.182	-50.6279
2091	0	Extremo 2A	-0.00544	35.159	0.028	0.2485	0.0119	-10.4932
2091	0.5	Extremo 2A	-0.00544	39.573	0.028	0.2485	-0.0021	-29.176
2091	1	Extremo 2A	-0.00544	43.987	0.028	0.2485	-0.0161	-50.0659
2093	0	Extremo 1A	0.232	-43.026	1.559	3.3094	0.8113	-48.3272
2093	0.5	Extremo 1A	0.232	-38.612	1.559	3.3094	0.0319	-27.9179
2093	1	Extremo 1A	0.232	-34.197	1.559	3.3094	-0.7475	-9.7157
2093	0	Extremo 2A	0.019	-43.321	0.11	1.0206	0.0583	-49.102
2093	0.5	Extremo 2A	0.019	-38.907	0.11	1.0206	0.0033	-28.5451
2093	1	Extremo 2A	0.019	-34.493	0.11	1.0206	-0.0517	-10.1952
2094	0	Extremo 1A	0.021	-18.934	0.404	0.7629	0.1458	-10.0594
2094	0.3	Extremo 1A	0.021	-16.848	0.404	0.7629	0.0246	-4.692
2094	0.6	Extremo 1A	0.021	-14.762	0.404	0.7629	-0.0966	0.0496
2094	0	Extremo 2A	0.00182	-19.097	0.032	0.2254	0.012	-10.2051
2094	0.3	Extremo 2A	0.00182	-17.011	0.032	0.2254	0.0025	-4.789
2094	0.6	Extremo 2A	0.00182	-14.925	0.032	0.2254	-0.007	0.0013
2095	0	Extremo 1A	-0.00384	15.135	0.083	0.8298	0.0185	-0.0172
2095	0.3	Extremo 1A	-0.00384	17.221	0.083	0.8298	-0.0065	-4.8706
2095	0.6	Extremo 1A	-0.00384	19.307	0.083	0.8298	-0.0314	-10.3498
2095	0	Extremo 2A	-0.00038	15.106	0.00638	0.2192	0.0013	-0.0083
2095	0.3	Extremo 2A	-0.00038	17.192	0.00638	0.2192	-0.00064	-4.8529
2095	0.6	Extremo 2A	-0.00038	19.278	0.00638	0.2192	-0.0025	-10.3234
2096	0	Extremo 1A	-0.04	35.466	0.288	2.567	0.136	-10.519
2096	0.5	Extremo 1A	-0.04	39.88	0.288	2.567	-0.0081	-29.3553
2096	1	Extremo 1A	-0.04	44.294	0.288	2.567	-0.1522	-50.3987
2096	0	Extremo 2A	-0.00385	35.389	0.021	0.4566	0.0087	-10.4332
2096	0.5	Extremo 2A	-0.00385	39.803	0.021	0.4566	-0.0017	-29.2314
2096	1	Extremo 2A	-0.00385	44.218	0.021	0.4566	-0.0121	-50.2367
2098	0	Extremo 1A	0.187	-43.791	1.234	3.7647	0.6566	-49.6218
2098	0.5	Extremo 1A	0.187	-39.377	1.234	3.7647	0.0394	-28.8296
2098	1	Extremo 1A	0.187	-34.963	1.234	3.7647	-0.5778	-10.2444
2098	0	Extremo 2A	0.013	-43.664	0.086	1.1609	0.0453	-49.5693
2098	0.5	Extremo 2A	0.013	-39.25	0.086	1.1609	0.0025	-28.8409
2098	1	Extremo 2A	0.013	-34.836	0.086	1.1609	-0.0404	-10.3194
2099	0	Extremo 1A	0.018	-19.177	0.341	0.8908	0.1271	-10.2446
2099	0.3	Extremo 1A	0.018	-17.091	0.341	0.8908	0.0249	-4.8045
2099	0.6	Extremo 1A	0.018	-15.005	0.341	0.8908	-0.0773	0.0098
2099	0	Extremo 2A	0.00128	-19.176	0.025	0.2324	0.0094	-10.2565
2099	0.3	Extremo 2A	0.00128	-17.09	0.025	0.2324	0.0019	-4.8166
2099	0.6	Extremo 2A	0.00128	-15.004	0.025	0.2324	-0.0055	-0.0024
2100	0	Extremo 1A	-0.00249	15.025	0.07	0.8053	0.0154	0.0659
2100	0.3	Extremo 1A	-0.00249	17.111	0.07	0.8053	-0.0057	-4.7545
2100	0.6	Extremo 1A	-0.00249	19.197	0.07	0.8053	-0.0267	-10.2006
2100	0	Extremo 2A	-0.00024	15.073	0.00495	0.1966	0.00097	0.0568
2100	0.3	Extremo 2A	-0.00024	17.159	0.00495	0.1966	-0.00051	-4.7781
2100	0.6	Extremo 2A	-0.00024	19.245	0.00495	0.1966	-0.002	-10.2388
2101	0	Extremo 1A	-0.026	35.826	0.241	2.761	0.1118	-9.8753
2101	0.5	Extremo 1A	-0.026	40.24	0.241	2.761	-0.0087	-28.8916
2101	1	Extremo 1A	-0.026	44.654	0.241	2.761	-0.1292	-50.1149
2101	0	Extremo 2A	-0.00241	35.995	0.016	0.6582	0.0065	-9.9757
2101	0.5	Extremo 2A	-0.00241	40.409	0.016	0.6582	-0.0014	-29.0766
2101	1	Extremo 2A	-0.00241	44.823	0.016	0.6582	-0.0094	-50.3845
2103	0	Extremo 1A	0.133	-45.226	0.98	3.3915	0.5262	-51.0951
2103	0.5	Extremo 1A	0.133	-40.812	0.98	3.3915	0.0364	-29.5856
2103	1	Extremo 1A	0.133	-36.398	0.98	3.3915	-0.4534	-10.2832
2103	0	Extremo 2A	0.00896	-44.652	0.069	0.9995	0.0362	-50.3041
2103	0.5	Extremo 2A	0.00896	-40.238	0.069	0.9995	0.002	-29.0814
2103	1	Extremo 2A	0.00896	-35.824	0.069	0.9995	-0.0323	-10.0657
2104	0	Extremo 1A	0.013	-19.383	0.283	0.8734	0.1074	-10.3464
2104	0.3	Extremo 1A	0.013	-17.297	0.283	0.8734	0.0227	-4.8444
2104	0.6	Extremo 1A	0.013	-15.211	0.283	0.8734	-0.0621	0.0319
2104	0	Extremo 2A	0.00087	-19.248	0.02	0.2496	0.0076	-10.251
2104	0.3	Extremo 2A	0.00087	-17.162	0.02	0.2496	0.0016	-4.7894
2104	0.6	Extremo 2A	0.00087	-15.076	0.02	0.2496	-0.0044	0.0464
2105	0	Extremo 1A	-0.00125	14.711	0.063	0.354	0.0134	0.2035
2105	0.3	Extremo 1A	-0.00125	16.797	0.063	0.354	-0.0056	-4.5226
2105	0.6	Extremo 1A	-0.00125	18.883	0.063	0.354	-0.0246	-9.8745
2105	0	Extremo 2A	-9.5E-05	14.837	0.00422	-0.1794	0.0008	0.1804
2105	0.3	Extremo 2A	-9.5E-05	16.923	0.00422	-0.1794	-0.00046	-4.5837
2105	0.6	Extremo 2A	-9.5E-05	19.009	0.00422	-0.1794	-0.0017	-9.9735
2106	0	Extremo 1A	-0.013	35.915	0.209	1.9487	0.0949	-8.6202
2106	0.5	Extremo 1A	-0.013	40.329	0.209	1.9487	-0.0096	-27.6811
2106	1	Extremo 1A	-0.013	44.743	0.209	1.9487	-0.1141	-48.949
2106	0	Extremo 2A	-0.00096	36.378	0.013	0.107	0.0052	-8.8737
2106	0.5	Extremo 2A	-0.00096	40.792	0.013	0.107	-0.0013	-28.166
2106	1	Extremo 2A	-0.00096	45.206	0.013	0.107	-0.0077	-49.6653
2108	0	Extremo 1A	0.092	-47.036	0.793	3.2125	0.4301	-51.9236
2108	0.5	Extremo 1A	0.092	-42.621	0.793	3.2125	0.0336	-29.5094
2108	1	Extremo 1A	0.092	-38.207	0.793	3.2125	-0.3628	-9.3021
2108	0	Extremo 2A	0.0064	-45.84	0.056	1.3014	0.0298	-50.4446
2108	0.5	Extremo 2A	0.0064	-41.426	0.056	1.3014	0.0018	-28.6283
2108	1	Extremo 2A	0.0064	-37.011	0.056	1.3014	-0.0262	-9.019
2109	0	Extremo 1A	0.00898	-19.374	0.24	1.0847	0.0926	-10.2188
2109	0.3	Extremo 1A	0.00898	-17.288	0.24	1.0847	0.0208	-4.7195
2109	0.6	Extremo 1A	0.00898	-15.202	0.24	1.0847	-0.0511	0.1539
2109	0	Extremo 2A	0.00063	-19.136	0.017	0.5658	0.0065	-10.0582
2109	0.3	Extremo 2A	0.00063	-17.05	0.017	0.5658	0.0014	-4.6304
2109	0.6	Extremo 2A	0.00063	-14.964	0.017	0.5658	-0.0037	0.1716
2110	0	Extremo 1A	-0.00196	13.964	0.057	-0.6999	0.0117	0.2802
2110	0.3	Extremo 1A	-0.00196	16.05	0.057	-0.6999	-0.0055	-4.2219
2110	0.6	Extremo 1A	-0.00196	18.136	0.057	-0.6999	-0.0226	-9.3499
2110	0	Extremo 2A	-6.7E-05	14.164	0.00387	-1.111	0.00071	0.2483
2110	0.3	Extremo 2A	-6.7E-05	16.25	0.00387	-1.111	-0.00045	-4.3138
2110	0.6	Extremo 2A	-6.7E-05	18.336	0.00387	-1.111	-0.0016	-9.5017
2111	0	Extremo 1A	-0.018	33.068	0.182	-1.0511	0.0786	-7.8336
2111	0.5	Extremo 1A	-0.018	37.482	0.182	-1.0511	-0.0123	-25.4713
2111	1	Extremo 1A	-0.018	41.896	0.182	-1.0511	-0.1033	-45.3159
2111	0	Extremo 2A	-0.00053	33.855	0.011	-2.4765	0.0043	-8.1821
2111	0.5	Extremo 2A	-0.00053	38.269	0.011	-2.4765	-0.0013	-26.213
2111	1	Extremo 2A	-0.00053	42.683	0.011	-2.4765	-0.007	-46.4509
2113	0	Extremo 1A	0.109	-45.444	0.633	5.4249	0.3546	-49.6973
2113	0.5	Extremo 1A	0.109	-41.03	0.633	5.4249	0.0379	-28.0788
2113	1	Extremo 1A	0.109	-36.616	0.633	5.4249	-0.2788	-8.6674
2113	0	Extremo 2A	0.00828	-43.894	0.045	3.7995	0.0246	-47.8406
2113	0.5	Extremo 2A	0.00828	-39.48	0.045	3.7995	0.0022	-26.9971
2113	1	Extremo 2A	0.00828	-35.066	0.045	3.7995	-0.0203	-8.3606
2114	0	Extremo 1A	0.011	-18.872	0.196	1.9045	0.0768	-9.8541
2114	0.3	Extremo 1A	0.011	-16.786	0.196	1.9045	0.0181	-4.5055
2114	0.6	Extremo 1A	0.011	-14.7	0.196	1.9045	-0.0407	0.2173
2114	0	Extremo 2A	0.00085	-18.561	0.014	1.467	0.0053	-9.647
2114	0.3	Extremo 2A	0.00085	-16.475	0.014	1.467	0.0012	-4.3915
2114	0.6	Extremo 2A	0.00085	-14.389	0.014	1.467	-0.0029	0.2383
2115	0	Extremo 1A	-0.011	9.745	0.028	-1.7653	0.0058	-0.3461
2115	0.3	Extremo 1A	-0.011	11.831	0.028	-1.7653	-0.0028	-3.5824
2115	0.6	Extremo 1A	-0.011	13.917	0.028	-1.7653	-0.0113	-7.4444
2115	0	Extremo 2A	-0.00071	9.938	0.00221	-2.0422	0.00036	-0.4222
2115	0.3	Extremo 2A	-0.00071	12.023	0.00221	-2.0422	-0.0003	-3.7164
2115	0.6	Extremo 2A	-0.00071	14.109	0.00221	-2.0422	-0.00097	-7.6363
2116	0	Extremo 1A	-0.113	27.318	0.13	-3.6262	0.0461	-9.1256
2116	0.5	Extremo 1A	-0.113	31.733	0.13	-3.6262	-0.0188	-23.8884
2116	1	Extremo 1A	-0.113	36.147	0.13	-3.6262	-0.0838	-40.8581
2116	0	Extremo 2A	-0.0071	27.686	0.00856	-4.7419	0.0025	-9.8456

2116	0.5	Extremo 2A	-0.0071	32.1	0.00856	-4.7419	-0.0018	-24.7922
2116	1	Extremo 2A	-0.0071	36.514	0.00856	-4.7419	-0.0061	-41.9457
2118	0	Extremo 1A	0.371	-38.334	0.424	7.5988	0.2678	-45.3636
2118	0.5	Extremo 1A	0.371	-33.92	0.424	7.5988	0.0558	-27.3001
2118	1	Extremo 1A	0.371	-29.506	0.424	7.5988	-0.1562	-11.4437
2118	0	Extremo 2A	0.026	-37.255	0.03	6.0646	0.0181	-43.4161
2118	0.5	Extremo 2A	0.026	-32.841	0.03	6.0646	0.0033	-25.8923
2118	1	Extremo 2A	0.026	-28.427	0.03	6.0646	-0.0114	-10.5755
2119	0	Extremo 1A	0.036	-14.683	0.09	2.6931	0.035	-8.1333
2119	0.3	Extremo 1A	0.036	-12.597	0.09	2.6931	0.008	-4.0412
2119	0.6	Extremo 1A	0.036	-10.511	0.09	2.6931	-0.019	-0.5749
2119	0	Extremo 2A	0.00255	-14.359	0.00598	2.3437	0.0022	-7.8561
2119	0.3	Extremo 2A	0.00255	-12.273	0.00598	2.3437	0.00045	-3.8613
2119	0.6	Extremo 2A	0.00255	-10.187	0.00598	2.3437	-0.0013	-0.4922
2120	0	Extremo 1A	12.432	-3.129	11.237	31.2651	5.8541	-23.1583
2120	0.5	Extremo 1A	12.432	15.921	11.237	31.2651	0.2355	-26.3563
2120	1	Extremo 1A	12.432	34.972	11.237	31.2651	-5.383	-39.0798
2120	0	Extremo 2A	12.432	-3.129	11.237	31.2651	5.8541	-23.1583
2120	0.5	Extremo 2A	12.432	15.921	11.237	31.2651	0.2355	-26.3563
2120	1	Extremo 2A	12.432	34.972	11.237	31.2651	-5.383	-39.0798
2121	0	Extremo 1A	36.767	-166.789	10.667	-5.9192	7.1926	-51.1616
2121	0.5	Extremo 1A	36.767	-147.738	10.667	-5.9192	1.8589	27.4701
2121	1	Extremo 1A	36.767	-128.687	10.667	-5.9192	-3.4748	96.5764
2121	0	Extremo 2A	36.767	-166.789	10.667	-5.9192	7.1926	-51.1616
2121	0.5	Extremo 2A	36.767	-147.738	10.667	-5.9192	1.8589	27.4701
2121	1	Extremo 2A	36.767	-128.687	10.667	-5.9192	-3.4748	96.5764
2122	0	Extremo 1A	45.643	-131.821	7.199	3.0969	4.4296	94.7932
2122	0.5	Extremo 1A	45.643	-112.77	7.199	3.0969	0.8303	155.941
2122	1	Extremo 1A	45.643	-93.719	7.199	3.0969	-2.7691	207.564
2122	0	Extremo 2A	45.643	-131.821	7.199	3.0969	4.4296	94.7932
2122	0.5	Extremo 2A	45.643	-112.77	7.199	3.0969	0.8303	155.941
2122	1	Extremo 2A	45.643	-93.72	7.199	3.0969	-2.7691	207.564
2123	0	Extremo 1A	48.439	-59.712	4.715	6.3558	2.5531	197.283
2123	0.5	Extremo 1A	48.439	-40.662	4.715	6.3558	0.1956	222.377
2123	1	Extremo 1A	48.439	-21.611	4.715	6.3558	-2.1618	237.945
2123	0	Extremo 2A	48.439	-59.712	4.715	6.3558	2.5531	197.284
2123	0.5	Extremo 2A	48.439	-40.662	4.715	6.3558	0.1956	222.377
2123	1	Extremo 2A	48.439	-21.611	4.715	6.3558	-2.1618	237.945
2124	0	Extremo 1A	48.912	12.227	3.173	2.4314	1.4607	231.828
2124	0.5	Extremo 1A	48.912	31.278	3.173	2.4314	-0.1258	220.952
2124	1	Extremo 1A	48.912	50.329	3.173	2.4314	-1.7123	200.55
2124	0	Extremo 2A	48.912	12.227	3.173	2.4314	1.4607	231.828
2124	0.5	Extremo 2A	48.912	31.278	3.173	2.4314	-0.1258	220.952
2124	1	Extremo 2A	48.912	50.329	3.173	2.4314	-1.7123	200.55
2125	0	Extremo 1A	48.584	82.396	2.201	-3.8626	0.8003	203.237
2125	0.5	Extremo 1A	48.584	101.447	2.201	-3.8626	-0.3004	157.276
2125	1	Extremo 1A	48.584	120.498	2.201	-3.8626	-1.401	101.79
2125	0	Extremo 2A	48.584	82.396	2.201	-3.8626	0.8003	203.237
2125	0.5	Extremo 2A	48.584	101.447	2.201	-3.8626	-0.3004	157.276
2125	1	Extremo 2A	48.584	120.498	2.201	-3.8626	-1.401	101.79
2126	0	Extremo 1A	48.053	154.602	1.566	-8.5434	0.3797	114.276
2126	0.5	Extremo 1A	48.053	173.653	1.566	-8.5434	-0.4035	32.2121
2126	1	Extremo 1A	48.053	192.704	1.566	-8.5434	-1.1866	-59.3771
2126	0	Extremo 2A	48.053	154.602	1.566	-8.5434	0.3797	114.276
2126	0.5	Extremo 2A	48.053	173.653	1.566	-8.5434	-0.4035	32.2123
2126	1	Extremo 2A	48.053	192.704	1.566	-8.5434	-1.1866	-59.3769
2127	0	Extremo 1A	47.541	234.057	1.137	-4.4277	0.0999	-38.8697
2127	0.5	Extremo 1A	47.541	253.108	1.137	-4.4277	-0.4684	-160.661
2127	1	Extremo 1A	47.541	272.159	1.137	-4.4277	-1.0367	-291.977
2127	0	Extremo 2A	47.541	234.057	1.137	-4.4277	0.0999	-38.8695
2127	0.5	Extremo 2A	47.541	253.108	1.137	-4.4277	-0.4684	-160.661
2127	1	Extremo 2A	47.541	272.158	1.137	-4.4277	-1.0367	-291.977
2128	0	Extremo 1A	47.116	313.222	0.837	22.2634	-0.0927	-276.614
2128	0.5	Extremo 1A	47.116	332.273	0.837	22.2634	-0.5113	-437.988
2128	1	Extremo 1A	47.116	351.324	0.837	22.2634	-0.9299	-608.887
2128	0	Extremo 2A	47.116	313.222	0.837	22.2634	-0.0927	-276.614
2128	0.5	Extremo 2A	47.116	332.273	0.837	22.2634	-0.5113	-437.988
2128	1	Extremo 2A	47.116	351.324	0.837	22.2634	-0.9299	-608.887
2129	0	Extremo 1A	46.785	273.967	0.624	64.6433	-0.2288	-636.505
2129	0.5	Extremo 1A	46.785	293.018	0.624	64.6433	-0.5407	-778.252
2129	1	Extremo 1A	46.785	312.069	0.624	64.6433	-0.8525	-929.523
2129	0	Extremo 2A	46.785	273.967	0.624	64.6433	-0.2288	-636.505
2129	0.5	Extremo 2A	46.785	293.018	0.624	64.6433	-0.5407	-778.251
2129	1	Extremo 2A	46.785	312.069	0.624	64.6433	-0.8525	-929.523
2130	0	Extremo 1A	46.536	-390.748	0.468	-51.2693	-0.3272	-936.574
2130	0.5	Extremo 1A	46.536	-371.697	0.468	-51.2693	-0.5613	-745.963
2130	1	Extremo 1A	46.536	-352.646	0.468	-51.2693	-0.7955	-564.877
2130	0	Extremo 2A	46.536	-390.747	0.468	-51.2693	-0.3272	-936.574
2130	0.5	Extremo 2A	46.536	-371.697	0.468	-51.2693	-0.5613	-745.963
2130	1	Extremo 2A	46.536	-352.646	0.468	-51.2693	-0.7955	-564.877
2131	0	Extremo 1A	46.353	-430.102	0.354	-8.777	-0.3992	-551.406
2131	0.5	Extremo 1A	46.353	-411.051	0.354	-8.777	-0.5762	-341.118
2131	1	Extremo 1A	46.353	-392	0.354	-8.777	-0.7531	-140.355
2131	0	Extremo 2A	46.353	-430.102	0.354	-8.777	-0.3992	-551.406
2131	0.5	Extremo 2A	46.353	-411.051	0.354	-8.777	-0.5762	-341.118
2131	1	Extremo 2A	46.353	-392	0.354	-8.777	-0.7531	-140.355
2132	0	Extremo 1A	46.22	-351.161	0.269	18.1601	-0.4526	-170.019
2132	0.5	Extremo 1A	46.22	-332.11	0.269	18.1601	-0.5869	0.7993
2132	1	Extremo 1A	46.22	-313.059	0.269	18.1601	-0.7212	162.092
2132	0	Extremo 2A	46.22	-351.161	0.269	18.1601	-0.4526	-170.018
2132	0.5	Extremo 2A	46.22	-332.11	0.269	18.1601	-0.5869	0.7994
2132	1	Extremo 2A	46.22	-313.059	0.269	18.1601	-0.7212	162.092
2133	0	Extremo 1A	46.125	-272.138	0.205	22.6786	-0.4926	126.972
2133	0.5	Extremo 1A	46.125	-253.087	0.205	22.6786	-0.5949	258.278
2133	1	Extremo 1A	46.125	-234.036	0.205	22.6786	-0.6971	380.059
2133	0	Extremo 2A	46.125	-272.138	0.205	22.6786	-0.4926	126.972
2133	0.5	Extremo 2A	46.125	-253.087	0.205	22.6786	-0.5949	258.278
2133	1	Extremo 2A	46.125	-234.036	0.205	22.6786	-0.6971	380.059
2134	0	Extremo 1A	46.057	-200.838	0.156	18.4797	-0.5226	352.393
2134	0.5	Extremo 1A	46.057	-181.787	0.156	18.4797	-0.6007	448.049
2134	1	Extremo 1A	46.057	-162.736	0.156	18.4797	-0.6788	534.179
2134	0	Extremo 2A	46.057	-200.838	0.156	18.4797	-0.5226	352.393
2134	0.5	Extremo 2A	46.057	-181.787	0.156	18.4797	-0.6007	448.049
2134	1	Extremo 2A	46.057	-162.736	0.156	18.4797	-0.6788	534.179
2135	0	Extremo 1A	46.009	-132.837	0.12	12.1725	-0.5453	515.446
2135	0.5	Extremo 1A	46.009	-113.786	0.12	12.1725	-0.6051	577.102
2135	1	Extremo 1A	46.009	-94.735	0.12	12.1725	-0.6649	629.232
2135	0	Extremo 2A	46.009	-132.837	0.12	12.1725	-0.5453	515.446
2135	0.5	Extremo 2A	46.009	-113.786	0.12	12.1725	-0.6051	577.102
2135	1	Extremo 2A	46.009	-94.735	0.12	12.1725	-0.6649	629.232
2136	0	Extremo 1A	45.975	-65.834	0.092	5.6347	-0.5626	618.831
2136	0.5	Extremo 1A	45.975	-46.783	0.092	5.6347	-0.6084	646.986
2136	1	Extremo 1A	45.975	-27.732	0.092	5.6347	-0.6542	665.614
2136	0	Extremo 2A	45.975	-65.834	0.092	5.6347	-0.5626	618.831
2136	0.5	Extremo 2A	45.975	-46.783	0.092	5.6347	-0.6084	646.985
2136	1	Extremo 2A	45.975	-27.732	0.092	5.6347	-0.6542	665.614
2137	0	Extremo 1A	45.951	0.921	0.07	-0.8382	-0.5757	663.08
2137	0.5	Extremo 1A	45.951	19.972	0.07	-0.8382	-0.6109	657.856
2137	1	Extremo 1A	45.951	39.023	0.07	-0.8382	-0.646	643.107
2137	0	Extremo 2A	45.951	0.922	0.07	-0.8382	-0.5757	663.079
2137	0.5	Extremo 2A	45.951	19.973	0.07	-0.8382	-0.6109	657.856
2137	1	Extremo 2A	45.951	39.023	0.07	-0.8382	-0.646	643.107
2138	0	Extremo 1A	45.934	67.704	0.054	-7.3182	-0.5857	648.306
2138	0.5	Extremo 1A	45.934	86.755	0.054	-7.3182	-0.6127	609.692
2138	1	Extremo 1A	45.934	105.806	0.054	-7.3182	-0.6397	561.552
2138	0	Extremo 2A	45.934	67.704	0.054	-7.3182	-0.5857	648.306
2138	0.5	Extremo 2A	45.934	86.755	0.054	-7.3182	-0.6127	609.691
2138	1	Extremo 2A	45.934	105.806	0.054	-7.3182	-0.6397	561.551
2139	0	Extremo 1A	45.922	134.808	0.042	-13.8677	-0.5933	574.657
2139	0.5	Extremo 1A	45.922	153.859	0.042	-13.8677	-0.6141	502.49
2139	1	Extremo 1A	45.922	172.91	0.042	-13.8677	-0.6349	420.798
2139	0	Extremo 2A	45.922	134.808	0.042	-13.8677	-0.5933	574.656
2139	0.5	Extremo 2A	45.922	153.859	0.042	-13.8677	-0.6141	502.489
2139	1	Extremo 2A	45.922	172.91	0.042	-13.8677	-0.6349	420.797
2140	0	Extremo 1A	45.914	203.098	0.032	-20.1177	-0.5992	442.342
2140	0.5	Extremo 1A	45.914	222.149	0.032	-20.1177	-0.6152	336.03
2140	1	Extremo 1A	45.914	241.2	0.032	-20.1177	-0.6312	220.193
2140	0	Extremo 2A	45.914	203.098	0.032	-20.1177	-0.5992	442.341
2140	0.5	Extremo 2A	45.914	222.149	0.032	-20.1177	-0.6152	336.03
2140	1	Extremo 2A	45.914	241.2	0.032	-20.1177	-0.6312	220.192
2141	0	Extremo 1A	45.909	275.242	0.025	-23.8531	-0.6036	250.84
2141	0.5	Extremo 1A	45.909	294.293	0.025	-23.8531	-0.616	108.456
2141	1	Extremo 1A	45.909	313.344	0.025	-23.8531	-0.6283	-43.4531
2141	0	Extremo 2A	45.909	275.242	0.025	-23.8531	-0.6036	250.839

2141	0.5	Extremo 2A	45.909	294.293	0.025	-23.8531	-0.616	108.455
2141	1	Extremo 2A	45.909	313.344	0.025	-23.8531	-0.6283	-43.4539
2142	0	Extremo 1A	45.905	356.372	0.019	-17.3477	-0.6071	-5.4958
2142	0.5	Extremo 1A	45.905	375.423	0.019	-17.3477	-0.6166	-188.444
2142	1	Extremo 1A	45.905	394.473	0.019	-17.3477	-0.6261	-380.918
2142	0	Extremo 2A	45.905	356.372	0.019	-17.3477	-0.6071	-5.4966
2142	0.5	Extremo 2A	45.905	375.423	0.019	-17.3477	-0.6166	-188.445
2142	1	Extremo 2A	45.905	394.474	0.019	-17.3477	-0.6261	-380.919
2143	0	Extremo 1A	45.902	437.377	0.015	15.3711	-0.6097	-350.78
2143	0.5	Extremo 1A	45.902	456.428	0.015	15.3711	-0.6171	-574.231
2143	1	Extremo 1A	45.902	475.478	0.015	15.3711	-0.6244	-807.207
2143	0	Extremo 2A	45.902	437.377	0.015	15.3711	-0.6097	-350.781
2143	0.5	Extremo 2A	45.902	456.428	0.015	15.3711	-0.6171	-574.232
2143	1	Extremo 2A	45.902	475.479	0.015	15.3711	-0.6244	-807.208
2144	0	Extremo 1A	45.901	380.641	0.011	66.314	-0.6117	-828.864
2144	0.5	Extremo 1A	45.901	399.692	0.011	66.314	-0.6174	-1023.95
2144	1	Extremo 1A	45.901	418.743	0.011	66.314	-0.6231	-1228.56
2144	0	Extremo 2A	45.901	380.641	0.011	66.3141	-0.6117	-828.865
2144	0.5	Extremo 2A	45.901	399.692	0.011	66.3141	-0.6174	-1023.95
2144	1	Extremo 2A	45.901	418.743	0.011	66.3141	-0.6231	-1228.56
2145	0	Extremo 1A	45.899	-403.995	0.0088	-67.0205	-0.6133	-1228.03
2145	0.5	Extremo 1A	45.899	-384.944	0.0088	-67.0205	-0.6177	-1030.79
2145	1	Extremo 1A	45.899	-365.893	0.0088	-67.0205	-0.6221	-843.084
2145	0	Extremo 2A	45.899	-403.995	0.0088	-67.0205	-0.6133	-1228.03
2145	0.5	Extremo 2A	45.899	-384.945	0.0088	-67.0205	-0.6177	-1030.79
2145	1	Extremo 2A	45.899	-365.894	0.0088	-67.0205	-0.6221	-843.084
2146	0	Extremo 1A	45.899	-460.729	0.00681	-16.0783	-0.6145	-820.369
2146	0.5	Extremo 1A	45.899	-441.678	0.00681	-16.0783	-0.6179	-594.767
2146	1	Extremo 1A	45.899	-422.627	0.00681	-16.0783	-0.6213	-378.691
2146	0	Extremo 2A	45.899	-460.73	0.00681	-16.0783	-0.6145	-820.37
2146	0.5	Extremo 2A	45.899	-441.679	0.00681	-16.0783	-0.6179	-594.768
2146	1	Extremo 2A	45.899	-422.628	0.00681	-16.0783	-0.6213	-378.691
2147	0	Extremo 1A	45.898	-379.722	0.00527	16.6391	-0.6154	-407.771
2147	0.5	Extremo 1A	45.898	-360.671	0.00527	16.6391	-0.6181	-222.673
2147	1	Extremo 1A	45.898	-341.62	0.00527	16.6391	-0.6207	-47.1003
2147	0	Extremo 2A	45.898	-379.722	0.00527	16.6391	-0.6154	-407.771
2147	0.5	Extremo 2A	45.898	-360.671	0.00527	16.6391	-0.6181	-222.673
2147	1	Extremo 2A	45.898	-341.62	0.00527	16.6391	-0.6207	-47.1004
2148	0	Extremo 1A	45.898	-298.587	0.00408	23.1424	-0.6161	-83.9973
2148	0.5	Extremo 1A	45.898	-279.536	0.00408	23.1424	-0.6182	60.5334
2148	1	Extremo 1A	45.898	-260.485	0.00408	23.1424	-0.6202	195.539
2148	0	Extremo 2A	45.898	-298.587	0.00408	23.1425	-0.6161	-83.9973
2148	0.5	Extremo 2A	45.898	-279.536	0.00408	23.1425	-0.6182	60.5335
2148	1	Extremo 2A	45.898	-260.485	0.00408	23.1425	-0.6202	195.539
2149	0	Extremo 1A	45.898	-226.435	0.00317	19.4046	-0.6167	165.955
2149	0.5	Extremo 1A	45.898	-207.384	0.00317	19.4046	-0.6183	274.41
2149	1	Extremo 1A	45.898	-188.333	0.00317	19.4046	-0.6198	373.339
2149	0	Extremo 2A	45.898	-226.435	0.00317	19.4046	-0.6167	165.955
2149	0.5	Extremo 2A	45.898	-207.384	0.00317	19.4046	-0.6183	274.41
2149	1	Extremo 2A	45.898	-188.334	0.00317	19.4046	-0.6198	373.339
2150	0	Extremo 1A	45.898	-158.132	0.00246	13.152	-0.6171	352.86
2150	0.5	Extremo 1A	45.898	-139.081	0.00246	13.152	-0.6183	427.163
2150	1	Extremo 1A	45.898	-120.03	0.00246	13.152	-0.6196	491.941
2150	0	Extremo 2A	45.898	-158.132	0.00246	13.152	-0.6171	352.861
2150	0.5	Extremo 2A	45.898	-139.081	0.00246	13.152	-0.6183	427.164
2150	1	Extremo 2A	45.898	-120.03	0.00246	13.152	-0.6196	491.942
2151	0	Extremo 1A	45.898	-91.006	0.00191	6.6004	-0.6174	479.905
2151	0.5	Extremo 1A	45.898	-71.955	0.00191	6.6004	-0.6184	520.646
2151	1	Extremo 1A	45.898	-52.904	0.00191	6.6004	-0.6193	551.861
2151	0	Extremo 2A	45.898	-91.007	0.00191	6.6004	-0.6174	479.906
2151	0.5	Extremo 2A	45.898	-71.956	0.00191	6.6004	-0.6184	520.647
2151	1	Extremo 2A	45.898	-52.905	0.00191	6.6004	-0.6193	551.862
2152	0	Extremo 1A	45.898	-24.19	0.00148	0.1193	-0.6177	547.736
2152	0.5	Extremo 1A	45.898	-5.139	0.00148	0.1193	-0.6184	555.068
2152	1	Extremo 1A	45.898	13.912	0.00148	0.1193	-0.6192	552.875
2152	0	Extremo 2A	45.898	-24.19	0.00148	0.1194	-0.6177	547.737
2152	0.5	Extremo 2A	45.898	-5.139	0.00148	0.1194	-0.6184	555.07
2152	1	Extremo 2A	45.898	13.912	0.00148	0.1194	-0.6192	552.877
2153	0	Extremo 1A	45.898	42.622	0.00115	-6.3511	-0.6179	556.493
2153	0.5	Extremo 1A	45.898	61.673	0.00115	-6.3511	-0.6185	530.419
2153	1	Extremo 1A	45.898	80.724	0.00115	-6.3511	-0.619	494.82
2153	0	Extremo 2A	45.898	42.622	0.00115	-6.3511	-0.6179	556.495
2153	0.5	Extremo 2A	45.898	61.673	0.00115	-6.3511	-0.6185	530.421
2153	1	Extremo 2A	45.898	80.724	0.00115	-6.3511	-0.619	494.822
2154	0	Extremo 1A	45.898	109.731	0.00089	-12.8698	-0.618	506.326
2154	0.5	Extremo 1A	45.898	128.782	0.00089	-12.8698	-0.6185	446.698
2154	1	Extremo 1A	45.898	147.833	0.00089	-12.8698	-0.6189	377.544
2154	0	Extremo 2A	45.898	109.731	0.00089	-12.8698	-0.618	506.328
2154	0.5	Extremo 2A	45.898	128.782	0.00089	-12.8698	-0.6185	446.7
2154	1	Extremo 2A	45.898	147.833	0.00089	-12.8698	-0.6189	377.546
2155	0	Extremo 1A	45.898	177.982	0.0007	-19.073	-0.6182	397.436
2155	0.5	Extremo 1A	45.898	197.033	0.0007	-19.073	-0.6185	303.683
2155	1	Extremo 1A	45.898	216.084	0.0007	-19.073	-0.6189	200.404
2155	0	Extremo 2A	45.898	177.981	0.0007	-19.073	-0.6182	397.439
2155	0.5	Extremo 2A	45.898	197.032	0.0007	-19.073	-0.6185	303.685
2155	1	Extremo 2A	45.898	216.083	0.0007	-19.073	-0.6189	200.406
2156	0	Extremo 1A	45.898	249.964	0.00054	-22.8014	-0.6183	229.298
2156	0.5	Extremo 1A	45.898	269.015	0.00054	-22.8014	-0.6185	99.5535
2156	1	Extremo 1A	45.898	288.066	0.00054	-22.8014	-0.6188	-39.7167
2156	0	Extremo 2A	45.898	249.964	0.00054	-22.8014	-0.6183	229.301
2156	0.5	Extremo 2A	45.898	269.015	0.00054	-22.8014	-0.6185	99.5564
2156	1	Extremo 2A	45.898	288.066	0.00054	-22.8014	-0.6188	-39.7136
2157	0	Extremo 1A	45.898	330.651	0.00042	-16.5518	-0.6183	-3.5972
2157	0.5	Extremo 1A	45.898	349.702	0.00042	-16.5518	-0.6185	-173.685
2157	1	Extremo 1A	45.898	368.753	0.00042	-16.5518	-0.6187	-353.299
2157	0	Extremo 2A	45.898	330.651	0.00042	-16.5518	-0.6183	-3.5941
2157	0.5	Extremo 2A	45.898	349.702	0.00042	-16.5518	-0.6185	-173.682
2157	1	Extremo 2A	45.898	368.753	0.00042	-16.5518	-0.6187	-353.296
2158	0	Extremo 1A	45.898	411.205	0.00033	15.1653	-0.6184	-324.675
2158	0.5	Extremo 1A	45.898	430.256	0.00033	15.1653	-0.6185	-535.04
2158	1	Extremo 1A	45.898	449.306	0.00033	15.1653	-0.6187	-754.931
2158	0	Extremo 2A	45.898	411.204	0.00033	15.1653	-0.6184	-324.672
2158	0.5	Extremo 2A	45.898	430.255	0.00033	15.1653	-0.6185	-535.037
2158	1	Extremo 2A	45.898	449.306	0.00033	15.1653	-0.6187	-754.927
2159	0	Extremo 1A	45.898	358.251	0.00026	64.5989	-0.6184	-776.486
2159	0.5	Extremo 1A	45.898	377.302	0.00026	64.5989	-0.6185	-960.374
2159	1	Extremo 1A	45.898	396.353	0.00026	64.5989	-0.6187	-1153.79
2159	0	Extremo 2A	45.898	358.25	0.00026	64.5988	-0.6184	-776.482
2159	0.5	Extremo 2A	45.898	377.301	0.00026	64.5988	-0.6185	-960.37
2159	1	Extremo 2A	45.898	396.352	0.00026	64.5988	-0.6187	-1153.78
2160	0	Extremo 1A	45.898	-400.13	0.0002	-64.5296	-0.6185	-1153.87
2160	0.5	Extremo 1A	45.898	-381.079	0.0002	-64.5296	-0.6186	-958.571
2160	1	Extremo 1A	45.898	-362.028	0.0002	-64.5296	-0.6187	-772.795
2160	0	Extremo 2A	45.898	-400.128	0.0002	-64.5295	-0.6185	-1153.87
2160	0.5	Extremo 2A	45.898	-381.077	0.0002	-64.5295	-0.6186	-958.568
2160	1	Extremo 2A	45.898	-362.026	0.0002	-64.5295	-0.6187	-772.792
2161	0	Extremo 1A	45.898	-453.084	0.00016	-15.0957	-0.6185	-751.411
2161	0.5	Extremo 1A	45.898	-434.033	0.00016	-15.0957	-0.6186	-529.632
2161	1	Extremo 1A	45.898	-414.982	0.00016	-15.0957	-0.6186	-317.378
2161	0	Extremo 2A	45.898	-453.082	0.00016	-15.0957	-0.6185	-751.408
2161	0.5	Extremo 2A	45.898	-434.031	0.00016	-15.0957	-0.6186	-529.63
2161	1	Extremo 2A	45.898	-414.981	0.00016	-15.0957	-0.6186	-317.377
2162	0	Extremo 1A	45.898	-372.531	0.00012	16.6222	-0.6185	-346.174
2162	0.5	Extremo 1A	45.898	-353.48	0.00012	16.6222	-0.6186	-164.672
2162	1	Extremo 1A	45.898	-334.429	0.00012	16.6222	-0.6186	7.3056
2162	0	Extremo 2A	45.898	-372.529	0.00012	16.6222	-0.6185	-346.173
2162	0.5	Extremo 2A	45.898	-353.479	0.00012	16.6222	-0.6186	-164.671
2162	1	Extremo 2A	45.898	-334.428	0.00012	16.6222	-0.6186	7.3057
2163	0	Extremo 1A	45.898	-291.845	9.5E-05	22.873	-0.6185	-28.9867
2163	0.5	Extremo 1A	45.898	-272.794	9.5E-05	22.873	-0.6186	112.173
2163	1	Extremo 1A	45.898	-253.743	9.5E-05	22.873	-0.6186	243.807
2163	0	Extremo 2A	45.898	-291.843	9.5E-05	22.873	-0.6185	-28.9865
2163	0.5	Extremo 2A	45.898	-272.792	9.5E-05	22.873	-0.6186	112.172
2163	1	Extremo 2A	45.898	-253.741	9.5E-05	22.873	-0.6186	243.806
2164	0	Extremo 1A	45.898	-219.864	7.4E-05	19.1466	-0.6185	214.738
2164	0.5	Extremo 1A	45.898	-200.813	7.4E-05	19.1466	-0.6186	319.908
2164	1	Extremo 1A	45.898	-181.762	7.4E-05	19.1466	-0.6186	415.551
2164	0	Extremo 2A	45.898	-219.863	7.4E-05	19.1465	-0.6185	214.737
2164	0.5	Extremo 2A	45.898	-200.812	7.4E-05	19.1465	-0.6186	319.906
2164	1	Extremo 2A	45.898	-181.761	7.4E-05	19.1465	-0.6186	415.549
2165	0	Extremo 1A	45.898	-151.616	5.8E-05	12.9467	-0.6185	395.483
2165	0.5	Extremo 1A	45.898	-132.565	5.8E-05	12.9467	-0.6186	466.528
2165	1	Extremo 1A	45.898	-113.514	5.8E-05	12.9467	-0.6186	528.048
2165	0	Extremo 2A	45.898	-151.615	5.8E-05	12.9467	-0.6185	395.48

2165	0.5	Extremo 2A	45.898	-132.564	5.8E-05	12.9467	-0.6186	466.525
2165	1	Extremo 2A	45.898	-113.513	5.8E-05	12.9467	-0.6186	528.044
2166	0	Extremo 1A	45.898	-84.511	4.5E-05	6.4336	-0.6185	516.362
2166	0.5	Extremo 1A	45.898	-65.46	4.5E-05	6.4336	-0.6186	553.855
2166	1	Extremo 1A	45.898	-46.409	4.5E-05	6.4336	-0.6186	581.822
2166	0	Extremo 2A	45.898	-84.509	4.5E-05	6.4335	-0.6185	516.358
2166	0.5	Extremo 2A	45.898	-65.459	4.5E-05	6.4335	-0.6186	553.85
2166	1	Extremo 2A	45.898	-46.408	4.5E-05	6.4335	-0.6186	581.817
2167	0	Extremo 1A	45.898	-17.704	3.5E-05	-0.0272	-0.6185	578.019
2167	0.5	Extremo 1A	45.898	1.347	3.5E-05	-0.0272	-0.6186	582.108
2167	1	Extremo 1A	45.898	20.398	3.5E-05	-0.0272	-0.6186	576.672
2167	0	Extremo 2A	45.898	-17.703	3.5E-05	-0.0272	-0.6185	578.014
2167	0.5	Extremo 2A	45.898	1.348	3.5E-05	-0.0272	-0.6186	582.103
2167	1	Extremo 2A	45.898	20.399	3.5E-05	-0.0272	-0.6186	576.666
2168	0	Extremo 1A	45.898	49.103	2.7E-05	-6.4912	-0.6186	580.601
2168	0.5	Extremo 1A	45.898	68.154	2.7E-05	-6.4912	-0.6186	551.286
2168	1	Extremo 1A	45.898	87.205	2.7E-05	-6.4912	-0.6186	512.447
2168	0	Extremo 2A	45.898	49.104	2.7E-05	-6.4912	-0.6186	580.594
2168	0.5	Extremo 2A	45.898	68.155	2.7E-05	-6.4912	-0.6186	551.279
2168	1	Extremo 2A	45.898	87.206	2.7E-05	-6.4912	-0.6186	512.439
2169	0	Extremo 1A	45.898	116.212	2.1E-05	-13.0144	-0.6186	524.264
2169	0.5	Extremo 1A	45.898	135.263	2.1E-05	-13.0144	-0.6186	461.395
2169	1	Extremo 1A	45.898	154.314	2.1E-05	-13.0144	-0.6186	389.001
2169	0	Extremo 2A	45.898	116.214	2.1E-05	-13.0145	-0.6186	524.257
2169	0.5	Extremo 2A	45.898	135.265	2.1E-05	-13.0145	-0.6186	461.387
2169	1	Extremo 2A	45.898	154.316	2.1E-05	-13.0145	-0.6186	388.992
2170	0	Extremo 1A	45.898	184.473	1.7E-05	-19.2303	-0.6186	409.218
2170	0.5	Extremo 1A	45.898	203.524	1.7E-05	-19.2303	-0.6186	312.219
2170	1	Extremo 1A	45.898	222.575	1.7E-05	-19.2303	-0.6186	205.694
2170	0	Extremo 2A	45.898	184.475	1.7E-05	-19.2303	-0.6186	409.209
2170	0.5	Extremo 2A	45.898	203.526	1.7E-05	-19.2303	-0.6186	312.209
2170	1	Extremo 2A	45.898	222.576	1.7E-05	-19.2303	-0.6186	205.683
2171	0	Extremo 1A	45.898	256.497	1.3E-05	-22.9649	-0.6186	234.941
2171	0.5	Extremo 1A	45.898	275.548	1.3E-05	-22.9649	-0.6186	101.93
2171	1	Extremo 1A	45.898	294.599	1.3E-05	-22.9649	-0.6186	-40.6069
2171	0	Extremo 2A	45.898	256.498	1.3E-05	-22.965	-0.6186	234.931
2171	0.5	Extremo 2A	45.898	275.549	1.3E-05	-22.965	-0.6186	101.919
2171	1	Extremo 2A	45.898	294.6	1.3E-05	-22.965	-0.6186	-40.6186
2172	0	Extremo 1A	45.898	337.298	1E-05	-16.6579	-0.6186	-4.1072
2172	0.5	Extremo 1A	45.898	356.349	1E-05	-16.6579	-0.6186	-177.519
2172	1	Extremo 1A	45.898	375.4	1E-05	-16.6579	-0.6186	-360.456
2172	0	Extremo 2A	45.898	337.299	1E-05	-16.6579	-0.6186	-4.1187
2172	0.5	Extremo 2A	45.898	356.35	1E-05	-16.6579	-0.6186	-177.531
2172	1	Extremo 2A	45.898	375.401	1E-05	-16.6579	-0.6186	-360.469
2173	0	Extremo 1A	45.898	417.968	8E-06	15.305	-0.6186	-331.525
2173	0.5	Extremo 1A	45.898	437.019	8E-06	15.305	-0.6186	-545.272
2173	1	Extremo 1A	45.898	456.07	8E-06	15.305	-0.6186	-768.544
2173	0	Extremo 2A	45.898	417.97	8E-06	15.3052	-0.6186	-331.538
2173	0.5	Extremo 2A	45.898	437.02	8E-06	15.3052	-0.6186	-545.286
2173	1	Extremo 2A	45.898	456.071	8E-06	15.3052	-0.6186	-768.559
2174	0	Extremo 1A	45.898	364.036	6.3E-06	65.1118	-0.6186	-790.197
2174	0.5	Extremo 1A	45.898	383.087	6.3E-06	65.1118	-0.6186	-976.977
2174	1	Extremo 1A	45.898	402.138	6.3E-06	65.1118	-0.6186	-1173.28
2174	0	Extremo 2A	45.898	364.037	6.3E-06	65.1123	-0.6186	-790.212
2174	0.5	Extremo 2A	45.898	383.088	6.3E-06	65.1123	-0.6186	-976.993
2174	1	Extremo 2A	45.898	402.139	6.3E-06	65.1123	-0.6186	-1173.3
2175	0	Extremo 1A	45.898	-401.142	4.9E-06	-65.1252	-0.6186	-1173.26
2175	0.5	Extremo 1A	45.898	-382.091	4.9E-06	-65.1252	-0.6186	-977.455
2175	1	Extremo 1A	45.898	-363.04	4.9E-06	-65.1252	-0.6186	-791.172
2175	0	Extremo 2A	45.898	-401.147	4.9E-06	-65.1257	-0.6186	-1173.28
2175	0.5	Extremo 2A	45.898	-382.096	4.9E-06	-65.1257	-0.6186	-977.468
2175	1	Extremo 2A	45.898	-363.045	4.9E-06	-65.1257	-0.6186	-791.183
2176	0	Extremo 1A	45.898	-455.074	3.9E-06	-15.3185	-0.6186	-769.478
2176	0.5	Extremo 1A	45.898	-436.023	3.9E-06	-15.3185	-0.6186	-546.704
2176	1	Extremo 1A	45.898	-416.972	3.9E-06	-15.3185	-0.6186	-333.455
2176	0	Extremo 2A	45.898	-455.08	3.9E-06	-15.3187	-0.6186	-769.489
2176	0.5	Extremo 2A	45.898	-436.029	3.9E-06	-15.3187	-0.6186	-546.712
2176	1	Extremo 2A	45.898	-416.978	3.9E-06	-15.3187	-0.6186	-333.461
2177	0	Extremo 1A	45.898	-374.404	3E-06	16.6442	-0.6186	-362.345
2177	0.5	Extremo 1A	45.898	-355.353	3E-06	16.6442	-0.6186	-179.906
2177	1	Extremo 1A	45.898	-336.302	3E-06	16.6442	-0.6186	-6.9919
2177	0	Extremo 2A	45.898	-374.409	3E-06	16.6443	-0.6186	-362.351
2177	0.5	Extremo 2A	45.898	-355.358	3E-06	16.6443	-0.6186	-179.909
2177	1	Extremo 2A	45.898	-336.307	3E-06	16.6443	-0.6186	-6.9923
2178	0	Extremo 1A	45.898	-293.603	2.4E-06	22.9509	-0.6186	-43.4504
2178	0.5	Extremo 1A	45.898	-274.552	2.4E-06	22.9509	-0.6186	98.5882
2178	1	Extremo 1A	45.898	-255.501	2.4E-06	22.9509	-0.6186	231.101
2178	0	Extremo 2A	45.898	-293.608	2.4E-06	22.951	-0.6186	-43.4511
2178	0.5	Extremo 2A	45.898	-274.557	2.4E-06	22.951	-0.6186	98.5901
2178	1	Extremo 2A	45.898	-255.506	2.4E-06	22.951	-0.6186	231.106
2179	0	Extremo 1A	45.898	-221.579	1.9E-06	19.2156	-0.6186	201.896
2179	0.5	Extremo 1A	45.898	-202.528	1.9E-06	19.2156	-0.6186	307.922
2179	1	Extremo 1A	45.898	-183.477	1.9E-06	19.2156	-0.6186	404.424
2179	0	Extremo 2A	45.898	-221.584	1.9E-06	19.2158	-0.6186	201.9
2179	0.5	Extremo 2A	45.898	-202.533	1.9E-06	19.2158	-0.6186	307.929
2179	1	Extremo 2A	45.898	-183.482	1.9E-06	19.2158	-0.6186	404.433
2180	0	Extremo 1A	45.898	-153.317	1.5E-06	12.9988	-0.6186	384.249
2180	0.5	Extremo 1A	45.898	-134.266	1.5E-06	12.9988	-0.6186	456.145
2180	1	Extremo 1A	45.898	-115.215	1.5E-06	12.9988	-0.6186	518.515
2180	0	Extremo 2A	45.898	-153.322	1.5E-06	12.9989	-0.6186	384.258
2180	0.5	Extremo 2A	45.898	-134.271	1.5E-06	12.9989	-0.6186	456.157
2180	1	Extremo 2A	45.898	-115.221	1.5E-06	12.9989	-0.6186	518.53
2181	0	Extremo 1A	45.898	-86.207	1.1E-06	6.4739	-0.6186	506.741
2181	0.5	Extremo 1A	45.898	-67.156	1.1E-06	6.4739	-0.6186	545.081
2181	1	Extremo 1A	45.898	-48.105	1.1E-06	6.4739	-0.6186	573.897
2181	0	Extremo 2A	45.898	-86.212	1.1E-06	6.474	-0.6186	506.755
2181	0.5	Extremo 2A	45.898	-67.161	1.1E-06	6.474	-0.6186	545.098
2181	1	Extremo 2A	45.898	-48.11	1.1E-06	6.474	-0.6186	573.916
2182	0	Extremo 1A	45.898	-19.398	8.9E-07	0.0069	-0.6186	570.013
2182	0.5	Extremo 1A	45.898	-0.347	8.9E-07	0.0069	-0.6186	574.95
2182	1	Extremo 1A	45.898	18.704	8.9E-07	0.0069	-0.6186	570.36
2182	0	Extremo 2A	45.898	-19.403	8.9E-07	0.007	-0.6186	570.032
2182	0.5	Extremo 2A	45.898	-0.352	8.9E-07	0.007	-0.6186	574.971
2182	1	Extremo 2A	45.898	18.698	8.9E-07	0.007	-0.6186	570.385
2183	0	Extremo 1A	45.898	47.41	7E-07	-6.4593	-0.6186	574.212
2183	0.5	Extremo 1A	45.898	66.461	7E-07	-6.4593	-0.6186	545.744
2183	1	Extremo 1A	45.898	85.512	7E-07	-6.4593	-0.6186	507.751
2183	0	Extremo 2A	45.898	47.405	7E-07	-6.4592	-0.6186	574.236
2183	0.5	Extremo 2A	45.898	66.456	7E-07	-6.4592	-0.6186	545.771
2183	1	Extremo 2A	45.898	85.507	7E-07	-6.4592	-0.6186	507.78
2184	0	Extremo 1A	45.898	114.52	5.5E-07	-12.9816	-0.6186	519.491
2184	0.5	Extremo 1A	45.898	133.571	5.5E-07	-12.9816	-0.6186	457.469
2184	1	Extremo 1A	45.898	152.621	5.5E-07	-12.9816	-0.6186	385.921
2184	0	Extremo 2A	45.898	114.514	5.5E-07	-12.9814	-0.6186	519.52
2184	0.5	Extremo 2A	45.898	133.565	5.5E-07	-12.9814	-0.6186	457.501
2184	1	Extremo 2A	45.898	152.616	5.5E-07	-12.9814	-0.6186	385.955
2185	0	Extremo 1A	45.898	182.778	4.3E-07	-19.1942	-0.6186	406.057
2185	0.5	Extremo 1A	45.898	201.829	4.3E-07	-19.1942	-0.6186	309.906
2185	1	Extremo 1A	45.898	220.88	4.3E-07	-19.1942	-0.6186	204.229
2185	0	Extremo 2A	45.898	182.772	4.3E-07	-19.194	-0.6186	406.091
2185	0.5	Extremo 2A	45.898	201.823	4.3E-07	-19.194	-0.6186	309.943
2185	1	Extremo 2A	45.898	220.874	4.3E-07	-19.194	-0.6186	204.268
2186	0	Extremo 1A	45.898	254.791	3.4E-07	-22.9271	-0.6186	233.388
2186	0.5	Extremo 1A	45.898	273.842	3.4E-07	-22.9271	-0.6186	101.23
2186	1	Extremo 1A	45.898	292.893	3.4E-07	-22.9271	-0.6186	-40.4533
2186	0	Extremo 2A	45.898	254.785	3.4E-07	-22.9268	-0.6186	233.427
2186	0.5	Extremo 2A	45.898	273.836	3.4E-07	-22.9268	-0.6186	101.272
2186	1	Extremo 2A	45.898	292.887	3.4E-07	-22.9268	-0.6186	-40.409
2187	0	Extremo 1A	45.898	335.562	2.6E-07	-16.6345	-0.6186	-4.0485
2187	0.5	Extremo 1A	45.898	354.613	2.6E-07	-16.6345	-0.6186	-176.592
2187	1	Extremo 1A	45.898	373.664	2.6E-07	-16.6345	-0.6186	-358.662
2187	0	Extremo 2A	45.898	335.557	2.6E-07	-16.6344	-0.6186	-4.0047
2187	0.5	Extremo 2A	45.898	354.608	2.6E-07	-16.6344	-0.6186	-176.546
2187	1	Extremo 2A	45.898	373.659	2.6E-07	-16.6344	-0.6186	-358.612
2188	0	Extremo 1A	45.898	416.203	2.1E-07	15.2658	-0.6186	-329.808
2188	0.5	Extremo 1A	45.898	435.254	2.1E-07	15.2658	-0.6186	-542.672
2188	1	Extremo 1A	45.898	454.304	2.1E-07	15.2658	-0.6186	-765.061
2188	0	Extremo 2A	45.898	416.196	2.1E-07	15.2651	-0.6186	-329.758
2188	0.5	Extremo 2A	45.898	435.247	2.1E-07	15.2651	-0.6186	-542.619
2188	1	Extremo 2A	45.898	454.298	2.1E-07	15.2651	-0.6186	-765.006
2189	0	Extremo 1A	45.898	362.522	1.6E-07	64.9773	-0.6186	-786.687
2189	0.5	Extremo 1A	45.898	381.573	1.6E-07	64.9773	-0.6186	-972.711
2189	1	Extremo 1A	45.898	400.624	1.6E-07	64.9773	-0.6186	-1168.26
2189	0	Extremo 2A	45.898	362.519	1.6E-07	64.9755	-0.6186	-786.63

2189	0.5	Extremo 2A	45.898	381.57	1.6E-07	64.9755	-0.6186	-972.653
2189	1	Extremo 2A	45.898	400.621	1.6E-07	64.9755	-0.6186	-1168.2
2190	0	Extremo 1A	45.898	-400.906	1.3E-07	-64.9737	-0.6186	-1168.27
2190	0.5	Extremo 1A	45.898	-381.855	1.3E-07	-64.9737	-0.6186	-972.575
2190	1	Extremo 1A	45.898	-362.804	1.3E-07	-64.9737	-0.6186	-786.41
2190	0	Extremo 2A	45.898	-400.889	1.3E-07	-64.9721	-0.6186	-1168.21
2190	0.5	Extremo 2A	45.898	-381.838	1.3E-07	-64.9721	-0.6186	-972.524
2190	1	Extremo 2A	45.898	-362.787	1.3E-07	-64.9721	-0.6186	-786.368
2191	0	Extremo 1A	45.898	-454.587	1E-07	-15.2622	-0.6186	-764.796
2191	0.5	Extremo 1A	45.898	-435.536	1E-07	-15.2622	-0.6186	-542.265
2191	1	Extremo 1A	45.898	-416.485	1E-07	-15.2622	-0.6186	-329.26
2191	0	Extremo 2A	45.898	-454.566	1E-07	-15.2617	-0.6186	-764.754
2191	0.5	Extremo 2A	45.898	-435.515	1E-07	-15.2617	-0.6186	-542.234
2191	1	Extremo 2A	45.898	-416.464	1E-07	-15.2617	-0.6186	-329.239
2192	0	Extremo 1A	45.898	-373.947	7.9E-08	16.6381	-0.6186	-358.126
2192	0.5	Extremo 1A	45.898	-354.896	7.9E-08	16.6381	-0.6186	-175.915
2192	1	Extremo 1A	45.898	-335.845	7.9E-08	16.6381	-0.6186	-3.2304
2192	0	Extremo 2A	45.898	-373.926	7.8E-08	16.6379	-0.6186	-358.104
2192	0.5	Extremo 2A	45.898	-354.875	7.8E-08	16.6379	-0.6186	-175.904
2192	1	Extremo 2A	45.898	-335.824	7.8E-08	16.6379	-0.6186	-3.2287
2193	0	Extremo 1A	45.898	-293.175	6.2E-08	22.9308	-0.6186	-39.6467
2193	0.5	Extremo 1A	45.898	-274.124	6.2E-08	22.9308	-0.6186	102.178
2193	1	Extremo 1A	45.898	-255.073	6.2E-08	22.9308	-0.6186	234.477
2193	0	Extremo 2A	45.898	-293.155	6.1E-08	22.9304	-0.6186	-39.644
2193	0.5	Extremo 2A	45.898	-274.104	6.1E-08	22.9304	-0.6186	102.171
2193	1	Extremo 2A	45.898	-255.053	6.1E-08	22.9304	-0.6186	234.46
2194	0	Extremo 1A	45.898	-221.162	4.9E-08	19.1981	-0.6186	205.306
2194	0.5	Extremo 1A	45.898	-202.111	4.9E-08	19.1981	-0.6186	311.124
2194	1	Extremo 1A	45.898	-183.06	4.9E-08	19.1981	-0.6186	407.417
2194	0	Extremo 2A	45.898	-221.142	4.7E-08	19.1977	-0.6186	205.29
2194	0.5	Extremo 2A	45.898	-202.091	4.7E-08	19.1977	-0.6186	311.098
2194	1	Extremo 2A	45.898	-183.04	4.7E-08	19.1977	-0.6186	407.381
2195	0	Extremo 1A	45.898	-152.904	3.8E-08	12.9858	-0.6186	387.269
2195	0.5	Extremo 1A	45.898	-133.853	3.8E-08	12.9858	-0.6186	458.958
2195	1	Extremo 1A	45.898	-114.802	3.8E-08	12.9858	-0.6186	521.122
2195	0	Extremo 2A	45.898	-152.884	3.6E-08	12.9854	-0.6186	387.234
2195	0.5	Extremo 2A	45.898	-133.833	3.6E-08	12.9854	-0.6186	458.913
2195	1	Extremo 2A	45.898	-114.782	3.6E-08	12.9854	-0.6186	521.067
2196	0	Extremo 1A	45.898	-85.795	3E-08	6.464	-0.6186	509.369
2196	0.5	Extremo 1A	45.898	-66.744	3E-08	6.464	-0.6186	547.504
2196	1	Extremo 1A	45.898	-47.693	3E-08	6.464	-0.6186	576.113
2196	0	Extremo 2A	45.898	-85.775	2.8E-08	6.4637	-0.6186	509.315
2196	0.5	Extremo 2A	45.898	-66.724	2.8E-08	6.4637	-0.6186	547.44
2196	1	Extremo 2A	45.898	-47.673	2.8E-08	6.4637	-0.6186	576.04
2197	0	Extremo 1A	45.898	-18.987	2.4E-08	-0.0013	-0.6186	572.249
2197	0.5	Extremo 1A	45.898	0.064	2.4E-08	-0.0013	-0.6186	576.98
2197	1	Extremo 1A	45.898	19.115	2.4E-08	-0.0013	-0.6186	572.185
2197	0	Extremo 2A	45.898	-18.967	2.1E-08	-0.0016	-0.6186	572.176
2197	0.5	Extremo 2A	45.898	0.084	2.1E-08	-0.0016	-0.6186	576.897
2197	1	Extremo 2A	45.898	19.135	2.1E-08	-0.0016	-0.6186	572.093
2198	0	Extremo 1A	45.898	47.821	1.8E-08	-6.4667	-0.6186	576.055
2198	0.5	Extremo 1A	45.898	66.872	1.8E-08	-6.4667	-0.6186	547.382
2198	1	Extremo 1A	45.898	85.923	1.8E-08	-6.4667	-0.6186	509.183
2198	0	Extremo 2A	45.898	47.841	1.5E-08	-6.4672	-0.6186	575.963
2198	0.5	Extremo 2A	45.898	66.892	1.5E-08	-6.4672	-0.6186	547.28
2198	1	Extremo 2A	45.898	85.943	1.5E-08	-6.4672	-0.6186	509.071
2199	0	Extremo 1A	45.898	114.93	1.4E-08	-12.989	-0.6186	520.942
2199	0.5	Extremo 1A	45.898	133.981	1.4E-08	-12.989	-0.6186	458.714
2199	1	Extremo 1A	45.898	153.032	1.4E-08	-12.989	-0.6186	386.961
2199	0	Extremo 2A	45.898	114.95	9.8E-09	-12.9896	-0.6186	520.831
2199	0.5	Extremo 2A	45.898	134.001	9.8E-09	-12.9896	-0.6186	458.594
2199	1	Extremo 2A	45.898	153.052	9.8E-09	-12.9896	-0.6186	386.83
2200	0	Extremo 1A	45.898	183.189	1.1E-08	-19.2021	-0.6186	407.116
2200	0.5	Extremo 1A	45.898	202.24	1.1E-08	-19.2021	-0.6186	310.759
2200	1	Extremo 1A	45.898	221.291	1.1E-08	-19.2021	-0.6186	204.876
2200	0	Extremo 2A	45.898	183.209	5.3E-09	-19.2029	-0.6186	406.987
2200	0.5	Extremo 2A	45.898	202.26	5.3E-09	-19.2029	-0.6186	310.62
2200	1	Extremo 2A	45.898	221.311	5.3E-09	-19.2029	-0.6186	204.727
2201	0	Extremo 1A	45.898	255.204	8.5E-09	-22.9352	-0.6186	234.056
2201	0.5	Extremo 1A	45.898	274.255	8.5E-09	-22.9352	-0.6186	101.691
2201	1	Extremo 1A	45.898	293.306	8.5E-09	-22.9352	-0.6186	-40.1992
2201	0	Extremo 2A	45.898	255.224	1.1E-09	-22.9362	-0.6186	233.908
2201	0.5	Extremo 2A	45.898	274.275	1.1E-09	-22.9362	-0.6186	101.533
2201	1	Extremo 2A	45.898	293.326	1.1E-09	-22.9362	-0.6186	-40.3674
2202	0	Extremo 1A	45.898	335.981	6.3E-09	-16.6399	-0.6186	-3.7729
2202	0.5	Extremo 1A	45.898	355.032	6.3E-09	-16.6399	-0.6186	-176.526
2202	1	Extremo 1A	45.898	374.083	6.3E-09	-16.6399	-0.6186	-358.805
2202	0	Extremo 2A	45.898	336.003	-3E-09	-16.6402	-0.6186	-3.9392
2202	0.5	Extremo 2A	45.898	355.054	-3E-09	-16.6402	-0.6186	-176.703
2202	1	Extremo 2A	45.898	374.105	-3E-09	-16.6402	-0.6186	-358.993
2203	0	Extremo 1A	45.898	416.627	4.5E-09	15.2719	-0.6186	-329.933
2203	0.5	Extremo 1A	45.898	435.678	4.5E-09	15.2719	-0.6186	-543.009
2203	1	Extremo 1A	45.898	454.728	4.5E-09	15.2719	-0.6186	-765.61
2203	0	Extremo 2A	45.898	416.65	-7.4E-09	15.2744	-0.6186	-330.12
2203	0.5	Extremo 2A	45.898	435.701	-7.4E-09	15.2744	-0.6186	-543.207
2203	1	Extremo 2A	45.898	454.752	-7.4E-09	15.2744	-0.6186	-765.82
2204	0	Extremo 1A	45.898	362.9	2.9E-09	65.0009	-0.6186	-787.237
2204	0.5	Extremo 1A	45.898	381.951	2.9E-09	65.0009	-0.6186	-973.45
2204	1	Extremo 1A	45.898	401.002	2.9E-09	65.0009	-0.6186	-1169.19
2204	0	Extremo 2A	45.898	362.912	-1.2E-08	65.0077	-0.6186	-787.451
2204	0.5	Extremo 2A	45.898	381.963	-1.2E-08	65.0077	-0.6186	-973.669
2204	1	Extremo 2A	45.898	401.014	-1.2E-08	65.0077	-0.6186	-1169.41
2205	0	Extremo 1A	45.898	-400.851	1.4E-09	-65.0028	-0.6186	-1169.18
2205	0.5	Extremo 1A	45.898	-381.8	1.4E-09	-65.0028	-0.6186	-973.522
2205	1	Extremo 1A	45.898	-362.749	1.4E-09	-65.0028	-0.6186	-787.385
2205	0	Extremo 2A	45.898	-400.918	-1.8E-08	-65.0089	-0.6186	-1169.41
2205	0.5	Extremo 2A	45.898	-381.867	-1.8E-08	-65.0089	-0.6186	-973.715
2205	1	Extremo 2A	45.898	-362.816	-1.8E-08	-65.0089	-0.6186	-787.544
2206	0	Extremo 1A	45.898	-454.578	-2E-11	-15.2738	-0.6186	-765.752
2206	0.5	Extremo 1A	45.898	-435.527	-2E-11	-15.2738	-0.6186	-543.226
2206	1	Extremo 1A	45.898	-416.476	-2E-11	-15.2738	-0.6186	-330.225
2206	0	Extremo 2A	45.898	-454.656	-2.5E-08	-15.2756	-0.6186	-765.91
2206	0.5	Extremo 2A	45.898	-435.605	-2.5E-08	-15.2756	-0.6186	-543.345
2206	1	Extremo 2A	45.898	-416.554	-2.5E-08	-15.2756	-0.6186	-330.305
2207	0	Extremo 1A	45.898	-373.932	-1.5E-09	16.638	-0.6186	-359.091
2207	0.5	Extremo 1A	45.898	-354.881	-1.5E-09	16.638	-0.6186	-176.888
2207	1	Extremo 1A	45.898	-335.83	-1.5E-09	16.638	-0.6186	-4.2101
2207	0	Extremo 2A	45.898	-374.009	-3.3E-08	16.639	-0.6186	-359.175
2207	0.5	Extremo 2A	45.898	-354.958	-3.3E-08	16.639	-0.6186	-176.933
2207	1	Extremo 2A	45.898	-335.907	-3.3E-08	16.639	-0.6186	-4.2164
2208	0	Extremo 1A	45.898	-293.155	-3.1E-09	22.9332	-0.6186	-40.6302
2208	0.5	Extremo 1A	45.898	-274.104	-3.1E-09	22.9332	-0.6186	101.185
2208	1	Extremo 1A	45.898	-255.053	-3.1E-09	22.9332	-0.6186	233.474
2208	0	Extremo 2A	45.898	-293.231	-4.3E-08	22.9349	-0.6186	-40.6407
2208	0.5	Extremo 2A	45.898	-274.18	-4.3E-08	22.9349	-0.6186	101.212
2208	1	Extremo 2A	45.898	-255.129	-4.3E-08	22.9349	-0.6186	233.539
2209	0	Extremo 1A	45.898	-221.14	-4.9E-09	19.2	-0.6186	204.3
2209	0.5	Extremo 1A	45.898	-202.089	-4.9E-09	19.2	-0.6186	310.108
2209	1	Extremo 1A	45.898	-183.038	-4.9E-09	19.2	-0.6186	406.389
2209	0	Extremo 2A	45.898	-221.215	-5.6E-08	19.2016	-0.6186	204.362
2209	0.5	Extremo 2A	45.898	-202.164	-5.6E-08	19.2016	-0.6186	310.207
2209	1	Extremo 2A	45.898	-183.113	-5.6E-08	19.2016	-0.6186	406.526
2210	0	Extremo 1A	45.898	-152.881	-7E-09	12.9867	-0.6186	386.24
2210	0.5	Extremo 1A	45.898	-133.83	-7E-09	12.9867	-0.6186	457.918
2210	1	Extremo 1A	45.898	-114.779	-7E-09	12.9867	-0.6186	520.071
2210	0	Extremo 2A	45.898	-152.956	-7.2E-08	12.9882	-0.6186	386.373
2210	0.5	Extremo 2A	45.898	-133.906	-7.2E-08	12.9882	-0.6186	458.089
2210	1	Extremo 2A	45.898	-114.855	-7.2E-08	12.9882	-0.6186	520.279
2211	0	Extremo 1A	45.898	-85.772	-9.5E-09	6.4642	-0.6186	508.318
2211	0.5	Extremo 1A	45.898	-66.721	-9.5E-09	6.4642	-0.6186	546.441
2211	1	Extremo 1A	45.898	-47.67	-9.5E-09	6.4642	-0.6186	575.039
2211	0	Extremo 2A	45.898	-85.847	-9.3E-08	6.4656	-0.6186	508.523
2211	0.5	Extremo 2A	45.898	-66.796	-9.3E-08	6.4656	-0.6186	546.684
2211	1	Extremo 2A	45.898	-47.745	-9.3E-08	6.4656	-0.6186	575.319
2212	0	Extremo 1A	45.898	-18.964	-1.3E-08	-0.0017	-0.6186	571.176
2212	0.5	Extremo 1A	45.898	0.087	-1.3E-08	-0.0017	-0.6186	575.895
2212	1	Extremo 1A	45.898	19.138	-1.3E-08	-0.0017	-0.6186	571.088
2212	0	Extremo 2A	45.898	-19.039	-1.2E-07	-0.00022	-0.6186	571.453
2212	0.5	Extremo 2A	45.898	0.012	-1.2E-07	-0.00022	-0.6186	576.209
2212	1	Extremo 2A	45.898	19.063	-1.2E-07	-0.00022	-0.6186	571.44
2213	0	Extremo 1A	45.898	47.845	-1.7E-08	-6.4679	-0.6186	574.96
2213	0.5	Extremo 1A	45.898	66.896	-1.7E-08	-6.4679	-0.6186	546.275
2213	1	Extremo 1A	45.898	85.947	-1.7E-08	-6.4679	-0.6186	508.064
2213	0	Extremo 2A	45.898	47.77	-1.5E-07	-6.4661	-0.6186	575.308

2213	0.5	Extremo 2A	45.898	66.821	-1.5E-07	-6.4661	-0.6186	546.661
2213	1	Extremo 2A	45.898	85.871	-1.5E-07	-6.4661	-0.6186	508.488
2214	0	Extremo 1A	45.898	114.954	-2.2E-08	-12.9911	-0.6186	519.825
2214	0.5	Extremo 1A	45.898	134.005	-2.2E-08	-12.9911	-0.6186	457.585
2214	1	Extremo 1A	45.898	153.056	-2.2E-08	-12.9911	-0.6186	385.82
2214	0	Extremo 2A	45.898	114.879	-1.9E-07	-12.9888	-0.6186	520.245
2214	0.5	Extremo 2A	45.898	133.93	-1.9E-07	-12.9888	-0.6186	458.042
2214	1	Extremo 2A	45.898	152.981	-1.9E-07	-12.9888	-0.6186	386.315
2215	0	Extremo 1A	45.898	183.214	-2.8E-08	-19.2054	-0.6186	405.978
2215	0.5	Extremo 1A	45.898	202.265	-2.8E-08	-19.2054	-0.6186	309.609
2215	1	Extremo 1A	45.898	221.316	-2.8E-08	-19.2054	-0.6186	203.713
2215	0	Extremo 2A	45.898	183.138	-2.5E-07	-19.2023	-0.6186	406.469
2215	0.5	Extremo 2A	45.898	202.189	-2.5E-07	-19.2023	-0.6186	310.137
2215	1	Extremo 2A	45.898	221.24	-2.5E-07	-19.2023	-0.6186	204.28
2216	0	Extremo 1A	45.898	255.232	-3.6E-08	-22.9392	-0.6186	232.898
2216	0.5	Extremo 1A	45.898	274.283	-3.6E-08	-22.9392	-0.6186	100.52
2216	1	Extremo 1A	45.898	293.334	-3.6E-08	-22.9392	-0.6186	-41.3843
2216	0	Extremo 2A	45.898	255.154	-3.2E-07	-22.9358	-0.6186	233.459
2216	0.5	Extremo 2A	45.898	274.205	-3.2E-07	-22.9358	-0.6186	101.12
2216	1	Extremo 2A	45.898	293.255	-3.2E-07	-22.9358	-0.6186	-40.7455
2217	0	Extremo 1A	45.898	336.016	-4.6E-08	-16.6405	-0.6186	-4.9506
2217	0.5	Extremo 1A	45.898	355.067	-4.6E-08	-16.6405	-0.6186	-177.722
2217	1	Extremo 1A	45.898	374.118	-4.6E-08	-16.6405	-0.6186	-360.018
2217	0	Extremo 2A	45.898	335.933	-4.1E-07	-16.6394	-0.6186	-4.3193
2217	0.5	Extremo 2A	45.898	354.984	-4.1E-07	-16.6394	-0.6186	-177.049
2217	1	Extremo 2A	45.898	374.035	-4.1E-07	-16.6394	-0.6186	-359.303
2218	0	Extremo 1A	45.898	416.669	-5.9E-08	15.287	-0.6186	-331.143
2218	0.5	Extremo 1A	45.898	435.72	-5.9E-08	15.287	-0.6186	-544.24
2218	1	Extremo 1A	45.898	454.771	-5.9E-08	15.287	-0.6186	-766.863
2218	0	Extremo 2A	45.898	416.581	-5.2E-07	15.2773	-0.6186	-330.432
2218	0.5	Extremo 2A	45.898	435.632	-5.2E-07	15.2773	-0.6186	-543.486
2218	1	Extremo 2A	45.898	454.683	-5.2E-07	15.2773	-0.6186	-766.065
2219	0	Extremo 1A	45.898	362.879	-7.5E-08	65.04	-0.6186	-788.513
2219	0.5	Extremo 1A	45.898	381.93	-7.5E-08	65.04	-0.6186	-974.715
2219	1	Extremo 1A	45.898	400.981	-7.5E-08	65.04	-0.6186	-1170.44
2219	0	Extremo 2A	45.898	362.834	-6.6E-07	65.0138	-0.6186	-787.701
2219	0.5	Extremo 2A	45.898	381.885	-6.6E-07	65.0138	-0.6186	-973.881
2219	1	Extremo 2A	45.898	400.936	-6.6E-07	65.0138	-0.6186	-1169.59
2220	0	Extremo 1A	45.898	-401.311	-9.6E-08	-65.0357	-0.6186	-1170.45
2220	0.5	Extremo 1A	45.898	-382.261	-9.6E-08	-65.0357	-0.6186	-974.557
2220	1	Extremo 1A	45.898	-363.21	-9.6E-08	-65.0357	-0.6186	-788.19
2220	0	Extremo 2A	45.898	-401.056	-8.4E-07	-65.0129	-0.6186	-1169.59
2220	0.5	Extremo 2A	45.898	-382.005	-8.4E-07	-65.0129	-0.6186	-973.823
2220	1	Extremo 2A	45.898	-362.954	-8.4E-07	-65.0129	-0.6186	-787.583
2221	0	Extremo 1A	45.898	-455.102	-1.2E-07	-15.2827	-0.6186	-766.553
2221	0.5	Extremo 1A	45.898	-436.051	-1.2E-07	-15.2827	-0.6186	-543.765
2221	1	Extremo 1A	45.898	-417	-1.2E-07	-15.2827	-0.6186	-330.502
2221	0	Extremo 2A	45.898	-454.803	-1.1E-06	-15.2764	-0.6186	-765.951
2221	0.5	Extremo 2A	45.898	-435.752	-1.1E-06	-15.2764	-0.6186	-543.312
2221	1	Extremo 2A	45.898	-416.701	-1.1E-06	-15.2764	-0.6186	-330.199
2222	0	Extremo 1A	45.898	-374.448	-1.6E-07	16.6448	-0.6186	-359.391
2222	0.5	Extremo 1A	45.898	-355.397	-1.6E-07	16.6448	-0.6186	-176.93
2222	1	Extremo 1A	45.898	-336.346	-1.6E-07	16.6448	-0.6186	-3.9935
2222	0	Extremo 2A	45.898	-374.155	-1.4E-06	16.6404	-0.6186	-359.074
2222	0.5	Extremo 2A	45.898	-355.104	-1.4E-06	16.6404	-0.6186	-176.759
2222	1	Extremo 2A	45.898	-336.053	-1.4E-06	16.6404	-0.6186	-3.97
2223	0	Extremo 1A	45.898	-293.664	-2E-07	22.9437	-0.6186	-40.4407
2223	0.5	Extremo 1A	45.898	-274.613	-2E-07	22.9437	-0.6186	101.629
2223	1	Extremo 1A	45.898	-255.562	-2E-07	22.9437	-0.6186	234.172
2223	0	Extremo 2A	45.898	-293.376	-1.8E-06	22.9367	-0.6186	-40.4006
2223	0.5	Extremo 2A	45.898	-274.325	-1.8E-06	22.9367	-0.6186	101.525
2223	1	Extremo 2A	45.898	-255.274	-1.8E-06	22.9367	-0.6186	233.924
2224	0	Extremo 1A	45.898	-221.646	-2.6E-07	19.2101	-0.6186	204.974
2224	0.5	Extremo 1A	45.898	-202.595	-2.6E-07	19.2101	-0.6186	311.034
2224	1	Extremo 1A	45.898	-183.544	-2.6E-07	19.2101	-0.6186	407.569
2224	0	Extremo 2A	45.898	-221.36	-2.3E-06	19.2034	-0.6186	204.741
2224	0.5	Extremo 2A	45.898	-202.309	-2.3E-06	19.2034	-0.6186	310.658
2224	1	Extremo 2A	45.898	-183.258	-2.3E-06	19.2034	-0.6186	407.05
2225	0	Extremo 1A	45.898	-153.387	-3.3E-07	12.9961	-0.6186	387.396
2225	0.5	Extremo 1A	45.898	-134.336	-3.3E-07	12.9961	-0.6186	459.327
2225	1	Extremo 1A	45.898	-115.285	-3.3E-07	12.9961	-0.6186	521.733
2225	0	Extremo 2A	45.898	-153.101	-2.9E-06	12.9899	-0.6186	386.891
2225	0.5	Extremo 2A	45.898	-134.05	-2.9E-06	12.9899	-0.6186	458.679
2225	1	Extremo 2A	45.898	-114.999	-2.9E-06	12.9899	-0.6186	520.941
2226	0	Extremo 1A	45.898	-86.278	-4.2E-07	6.4735	-0.6186	509.957
2226	0.5	Extremo 1A	45.898	-67.227	-4.2E-07	6.4735	-0.6186	548.333
2226	1	Extremo 1A	45.898	-48.176	-4.2E-07	6.4735	-0.6186	577.184
2226	0	Extremo 2A	45.898	-85.992	-3.7E-06	6.4675	-0.6186	509.179
2226	0.5	Extremo 2A	45.898	-66.941	-3.7E-06	6.4675	-0.6186	547.413
2226	1	Extremo 2A	45.898	-47.89	-3.7E-06	6.4675	-0.6186	576.12
2227	0	Extremo 1A	45.898	-19.47	-5.3E-07	0.0083	-0.6186	573.298
2227	0.5	Extremo 1A	45.898	-0.419	-5.3E-07	0.0083	-0.6186	578.27
2227	1	Extremo 1A	45.898	18.632	-5.3E-07	0.0083	-0.6186	573.717
2227	0	Extremo 2A	45.898	-19.183	-4.7E-06	0.0021	-0.6186	572.248
2227	0.5	Extremo 2A	45.898	-0.133	-4.7E-06	0.0021	-0.6186	577.077
2227	1	Extremo 2A	45.898	18.918	-4.7E-06	0.0021	-0.6186	572.38
2228	0	Extremo 1A	45.898	47.338	-6.8E-07	-6.4558	-0.6186	577.564
2228	0.5	Extremo 1A	45.898	66.389	-6.8E-07	-6.4558	-0.6186	549.132
2228	1	Extremo 1A	45.898	85.44	-6.8E-07	-6.4558	-0.6186	511.175
2228	0	Extremo 2A	45.898	47.625	-6E-06	-6.463	-0.6186	576.242
2228	0.5	Extremo 2A	45.898	66.676	-6E-06	-6.463	-0.6186	547.666
2228	1	Extremo 2A	45.898	85.727	-6E-06	-6.463	-0.6186	509.566
2229	0	Extremo 1A	45.898	114.446	-8.7E-07	-12.9752	-0.6186	522.91
2229	0.5	Extremo 1A	45.898	133.497	-8.7E-07	-12.9752	-0.6186	460.924
2229	1	Extremo 1A	45.898	152.548	-8.7E-07	-12.9752	-0.6186	389.413
2229	0	Extremo 2A	45.898	114.734	-7.7E-06	-12.9842	-0.6186	521.316
2229	0.5	Extremo 2A	45.898	133.784	-7.7E-06	-12.9842	-0.6186	459.186
2229	1	Extremo 2A	45.898	152.835	-7.7E-06	-12.9842	-0.6186	387.531
2230	0	Extremo 1A	45.898	182.701	-1.1E-06	-19.1841	-0.6186	409.539
2230	0.5	Extremo 1A	45.898	201.752	-1.1E-06	-19.1841	-0.6186	313.426
2230	1	Extremo 1A	45.898	220.803	-1.1E-06	-19.1841	-0.6186	207.787
2230	0	Extremo 2A	45.898	182.991	-9.9E-06	-19.1956	-0.6186	407.676
2230	0.5	Extremo 2A	45.898	202.042	-9.9E-06	-19.1956	-0.6186	311.417
2230	1	Extremo 2A	45.898	221.093	-9.9E-06	-19.1956	-0.6186	205.634
2231	0	Extremo 1A	45.898	254.706	-1.4E-06	-22.915	-0.6186	236.93
2231	0.5	Extremo 1A	45.898	273.757	-1.4E-06	-22.915	-0.6186	104.815
2231	1	Extremo 1A	45.898	292.807	-1.4E-06	-22.915	-0.6186	-36.8262
2231	0	Extremo 2A	45.898	255.003	-1.3E-05	-22.9273	-0.6186	234.8
2231	0.5	Extremo 2A	45.898	274.054	-1.3E-05	-22.9273	-0.6186	102.536
2231	1	Extremo 2A	45.898	293.105	-1.3E-05	-22.9273	-0.6186	-39.2542
2232	0	Extremo 1A	45.898	335.454	-1.8E-06	-16.6333	-0.6186	-0.4437
2232	0.5	Extremo 1A	45.898	354.505	-1.8E-06	-16.6333	-0.6186	-172.934
2232	1	Extremo 1A	45.898	373.556	-1.8E-06	-16.6333	-0.6186	-354.949
2232	0	Extremo 2A	45.898	335.771	-1.6E-05	-16.635	-0.6186	-2.8446
2232	0.5	Extremo 2A	45.898	354.822	-1.6E-05	-16.635	-0.6186	-175.493
2232	1	Extremo 2A	45.898	373.873	-1.6E-05	-16.635	-0.6186	-357.667
2233	0	Extremo 1A	45.898	416.071	-2.3E-06	15.2185	-0.6186	-326.103
2233	0.5	Extremo 1A	45.898	435.122	-2.3E-06	15.2185	-0.6186	-538.901
2233	1	Extremo 1A	45.898	454.173	-2.3E-06	15.2185	-0.6186	-761.225
2233	0	Extremo 2A	45.898	416.408	-2.1E-05	15.2601	-0.6186	-328.807
2233	0.5	Extremo 2A	45.898	435.459	-2.1E-05	15.2601	-0.6186	-541.774
2233	1	Extremo 2A	45.898	454.51	-2.1E-05	15.2601	-0.6186	-764.267
2234	0	Extremo 1A	45.898	362.585	-3E-06	64.8562	-0.6186	-782.779
2234	0.5	Extremo 1A	45.898	381.636	-3E-06	64.8562	-0.6186	-968.834
2234	1	Extremo 1A	45.898	400.687	-3E-06	64.8562	-0.6186	-1164.41
2234	0	Extremo 2A	45.898	362.756	-2.7E-05	64.9632	-0.6186	-785.877
2234	0.5	Extremo 2A	45.898	381.807	-2.7E-05	64.9632	-0.6186	-972.018
2234	1	Extremo 2A	45.898	400.858	-2.7E-05	64.9632	-0.6186	-1167.68
2235	0	Extremo 1A	45.898	-399.494	-3.8E-06	-64.8745	-0.6186	-1164.39
2235	0.5	Extremo 1A	45.898	-380.443	-3.8E-06	-64.8745	-0.6186	-969.405
2235	1	Extremo 1A	45.898	-361.392	-3.8E-06	-64.8745	-0.6186	-783.946
2235	0	Extremo 2A	45.898	-400.477	-3.4E-05	-64.9534	-0.6186	-1167.68
2235	0.5	Extremo 2A	45.898	-381.426	-3.4E-05	-64.9534	-0.6186	-972.207
2235	1	Extremo 2A	45.898	-362.375	-3.4E-05	-64.9534	-0.6185	-786.256
2236	0	Extremo 1A	45.898	-452.981	-4.8E-06	-15.2369	-0.6186	-762.341
2236	0.5	Extremo 1A	45.898	-433.93	-4.8E-06	-15.2369	-0.6186	-540.613
2236	1	Extremo 1A	45.898	-414.879	-4.8E-06	-15.2369	-0.6186	-328.411
2236	0	Extremo 2A	45.898	-454.13	-4.4E-05	-15.2503	-0.6186	-764.643
2236	0.5	Extremo 2A	45.898	-435.079	-4.4E-05	-15.2503	-0.6186	-542.341
2236	1	Extremo 2A	45.898	-416.028	-4.4E-05	-15.2503	-0.6185	-329.565
2237	0	Extremo 1A	45.898	-372.364	-6.2E-06	16.6147	-0.6186	-357.206
2237	0.5	Extremo 1A	45.898	-353.313	-6.2E-06	16.6147	-0.6186	-175.787
2237	1	Extremo 1A	45.898	-334.262	-6.2E-06	16.6147	-0.6186	-3.8938
2237	0	Extremo 2A	45.898	-373.493	-5.6E-05	16.6446	-0.6186	-358.422

2237	0.5	Extremo 2A	45.898	-354.442	-5.6E-05	16.6446	-0.6186	-176.438
2237	1	Extremo 2A	45.898	-335.391	-5.6E-05	16.6446	-0.6185	-3.9801
2238	0	Extremo 1A	45.898	-291.614	-7.9E-06	22.896	-0.6186	-40.2249
2238	0.5	Extremo 1A	45.898	-272.564	-7.9E-06	22.896	-0.6186	100.82
2238	1	Extremo 1A	45.898	-253.513	-7.9E-06	22.896	-0.6186	232.339
2238	0	Extremo 2A	45.898	-292.724	-7.2E-05	22.9367	-0.6186	-40.3872
2238	0.5	Extremo 2A	45.898	-273.673	-7.2E-05	22.9367	-0.6186	101.212
2238	1	Extremo 2A	45.898	-254.623	-7.2E-05	22.9367	-0.6185	233.286
2239	0	Extremo 1A	45.898	-219.61	-1E-05	19.1644	-0.6186	203.247
2239	0.5	Extremo 1A	45.898	-200.559	-1E-05	19.1644	-0.6186	308.289
2239	1	Extremo 1A	45.898	-181.508	-1E-05	19.1644	-0.6186	403.806
2239	0	Extremo 2A	45.898	-220.712	-9.2E-05	19.2046	-0.6186	204.123
2239	0.5	Extremo 2A	45.898	-201.662	-9.2E-05	19.2046	-0.6186	309.717
2239	1	Extremo 2A	45.898	-182.611	-9.2E-05	19.2046	-0.6185	405.785
2240	0	Extremo 1A	45.898	-151.354	-1.3E-05	12.9543	-0.6186	383.732
2240	0.5	Extremo 1A	45.898	-132.303	-1.3E-05	12.9543	-0.6186	454.646
2240	1	Extremo 1A	45.898	-113.252	-1.3E-05	12.9543	-0.6186	516.034
2240	0	Extremo 2A	45.898	-152.455	-0.00012	12.9924	-0.6186	385.643
2240	0.5	Extremo 2A	45.898	-133.404	-0.00012	12.9924	-0.6186	457.108
2240	1	Extremo 2A	45.898	-114.353	-0.00012	12.9924	-0.6185	519.047
2241	0	Extremo 1A	45.898	-84.245	-1.7E-05	6.4329	-0.6186	504.354
2241	0.5	Extremo 1A	45.898	-65.194	-1.7E-05	6.4329	-0.6186	541.713
2241	1	Extremo 1A	45.898	-46.143	-1.7E-05	6.4329	-0.6186	569.547
2241	0	Extremo 2A	45.898	-85.346	-0.00015	6.4698	-0.6186	507.301
2241	0.5	Extremo 2A	45.898	-66.295	-0.00015	6.4698	-0.6186	545.211
2241	1	Extremo 2A	45.898	-47.244	-0.00015	6.4698	-0.6185	573.596
2242	0	Extremo 1A	45.898	-17.435	-2.1E-05	-0.0346	-0.6186	565.756
2242	0.5	Extremo 1A	45.898	1.616	-2.1E-05	-0.0346	-0.6186	569.71
2242	1	Extremo 1A	45.898	20.667	-2.1E-05	-0.0346	-0.6186	564.14
2242	0	Extremo 2A	45.898	-18.537	-0.0002	0.0022	-0.6186	569.74
2242	0.5	Extremo 2A	45.898	0.513	-0.0002	0.0022	-0.6186	574.246
2242	1	Extremo 2A	45.898	19.564	-0.0002	0.0022	-0.6185	569.226
2243	0	Extremo 1A	45.898	49.376	-2.7E-05	-6.5057	-0.6186	568.085
2243	0.5	Extremo 1A	45.898	68.427	-2.7E-05	-6.5057	-0.6186	538.635
2243	1	Extremo 1A	45.898	87.478	-2.7E-05	-6.5057	-0.6186	499.658
2243	0	Extremo 2A	45.898	48.271	-0.00025	-6.468	-0.6187	573.107
2243	0.5	Extremo 2A	45.898	67.322	-0.00025	-6.468	-0.6185	544.208
2243	1	Extremo 2A	45.898	86.373	-0.00025	-6.468	-0.6184	505.785
2244	0	Extremo 1A	45.898	116.49	-3.5E-05	-13.0385	-0.6186	511.501
2244	0.5	Extremo 1A	45.898	135.541	-3.5E-05	-13.0385	-0.6186	448.493
2244	1	Extremo 1A	45.898	154.592	-3.5E-05	-13.0385	-0.6185	375.96
2244	0	Extremo 2A	45.898	115.38	-0.00032	-12.999	-0.6187	517.56
2244	0.5	Extremo 2A	45.898	134.431	-0.00032	-12.999	-0.6185	455.107
2244	1	Extremo 2A	45.898	153.482	-0.00032	-12.999	-0.6184	383.129
2245	0	Extremo 1A	45.898	184.762	-4.5E-05	-19.2663	-0.6186	396.215
2245	0.5	Extremo 1A	45.898	203.813	-4.5E-05	-19.2663	-0.6186	299.071
2245	1	Extremo 1A	45.898	222.864	-4.5E-05	-19.2663	-0.6185	192.402
2245	0	Extremo 2A	45.898	183.64	-0.00042	-19.2268	-0.6187	403.31
2245	0.5	Extremo 2A	45.898	202.691	-0.00042	-19.2268	-0.6185	306.727
2245	1	Extremo 2A	45.898	221.742	-0.00042	-19.2268	-0.6183	200.619
2246	0	Extremo 1A	45.898	256.819	-5.7E-05	-23.0051	-0.6186	221.708
2246	0.5	Extremo 1A	45.898	275.87	-5.7E-05	-23.0051	-0.6186	88.5363
2246	1	Extremo 1A	45.898	294.921	-5.7E-05	-23.0051	-0.6185	-54.1612
2246	0	Extremo 2A	45.898	255.664	-0.00054	-22.9799	-0.6188	229.843
2246	0.5	Extremo 2A	45.898	274.715	-0.00054	-22.9799	-0.6185	97.2486
2246	1	Extremo 2A	45.898	293.766	-0.00054	-22.9799	-0.6183	-44.8714
2247	0	Extremo 1A	45.898	337.707	-7.4E-05	-16.6515	-0.6186	-17.583
2247	0.5	Extremo 1A	45.898	356.758	-7.4E-05	-16.6515	-0.6186	-191.199
2247	1	Extremo 1A	45.898	375.809	-7.4E-05	-16.6515	-0.6185	-374.341
2247	0	Extremo 2A	45.898	336.468	-0.00069	-16.6981	-0.6188	-8.3737
2247	0.5	Extremo 2A	45.898	355.519	-0.00069	-16.6981	-0.6185	-181.371
2247	1	Extremo 2A	45.898	374.57	-0.00069	-16.6981	-0.6182	-363.893
2248	0	Extremo 1A	45.898	418.465	-9.5E-05	15.5021	-0.6186	-345.391
2248	0.5	Extremo 1A	45.898	437.516	-9.5E-05	15.5021	-0.6186	-559.387
2248	1	Extremo 1A	45.898	456.567	-9.5E-05	15.5021	-0.6185	-782.907
2248	0	Extremo 2A	45.898	417.144	-0.00089	15.2378	-0.6189	-334.938
2248	0.5	Extremo 2A	45.898	436.195	-0.00089	15.2378	-0.6185	-548.273
2248	1	Extremo 2A	45.898	455.246	-0.00089	15.2378	-0.618	-771.133
2249	0	Extremo 1A	45.898	363.8	-0.00012	65.5976	-0.6186	-804.851
2249	0.5	Extremo 1A	45.898	382.851	-0.00012	65.5976	-0.6186	-991.514
2249	1	Extremo 1A	45.898	401.902	-0.00012	65.5976	-0.6185	-1187.7
2249	0	Extremo 2A	45.898	363.158	-0.00115	65.0138	-0.619	-792.741

2249	0.5	Extremo 2A	45.898	382.209	-0.00115	65.0138	-0.6185	-979.083
2249	1	Extremo 2A	45.898	401.26	-0.00115	65.0138	-0.6179	-1174.95
2250	0	Extremo 1A	45.898	-406.475	-0.00016	-65.4602	-0.6186	-1187.83
2250	0.5	Extremo 1A	45.898	-387.424	-0.00016	-65.4602	-0.6186	-989.355
2250	1	Extremo 1A	45.898	-368.373	-0.00016	-65.4602	-0.6185	-800.406
2250	0	Extremo 2A	45.898	-402.417	-0.00148	-65.3461	-0.6192	-1174.82
2250	0.5	Extremo 2A	45.898	-383.366	-0.00148	-65.3461	-0.6184	-978.373
2250	1	Extremo 2A	45.898	-364.315	-0.00148	-65.3461	-0.6177	-791.453
2251	0	Extremo 1A	45.898	-461.14	-0.0002	-15.3644	-0.6187	-778.717
2251	0.5	Extremo 1A	45.898	-442.089	-0.0002	-15.3644	-0.6186	-552.91
2251	1	Extremo 1A	45.898	-423.039	-0.0002	-15.3644	-0.6185	-336.628
2251	0	Extremo 2A	45.898	-456.404	-0.00192	-15.5695	-0.6193	-769.583
2251	0.5	Extremo 2A	45.898	-437.353	-0.00192	-15.5695	-0.6184	-546.144
2251	1	Extremo 2A	45.898	-418.302	-0.00192	-15.5695	-0.6174	-332.23
2252	0	Extremo 1A	45.898	-380.383	-0.00026	16.7899	-0.6187	-365.833
2252	0.5	Extremo 1A	45.898	-361.332	-0.00026	16.7899	-0.6185	-180.404
2252	1	Extremo 1A	45.898	-342.281	-0.00026	16.7899	-0.6184	-4.5011
2252	0	Extremo 2A	45.898	-375.728	-0.00248	16.3678	-0.6196	-360.924
2252	0.5	Extremo 2A	45.898	-356.677	-0.00248	16.3678	-0.6183	-177.823
2252	1	Extremo 2A	45.898	-337.626	-0.00248	16.3678	-0.6171	-4.247
2253	0	Extremo 1A	45.898	-299.496	-0.00033	23.1446	-0.6187	-41.3358
2253	0.5	Extremo 1A	45.898	-280.445	-0.00033	23.1446	-0.6185	103.649
2253	1	Extremo 1A	45.898	-261.394	-0.00033	23.1446	-0.6184	239.109
2253	0	Extremo 2A	45.899	-294.923	-0.0032	22.6524	-0.6198	-40.485
2253	0.5	Extremo 2A	45.899	-275.872	-0.0032	22.6524	-0.6182	102.214
2253	1	Extremo 2A	45.899	-256.821	-0.0032	22.6524	-0.6166	235.387
2254	0	Extremo 1A	45.898	-227.441	-0.00043	19.4075	-0.6187	209.545
2254	0.5	Extremo 1A	45.898	-208.39	-0.00043	19.4075	-0.6185	318.503
2254	1	Extremo 1A	45.898	-189.339	-0.00043	19.4075	-0.6183	417.935
2254	0	Extremo 2A	45.899	-222.898	-0.00414	18.9047	-0.6202	206.419
2254	0.5	Extremo 2A	45.899	-203.847	-0.00414	18.9047	-0.6181	313.106
2254	1	Extremo 2A	45.899	-184.796	-0.00414	18.9047	-0.6161	410.267
2255	0	Extremo 1A	45.898	-159.172	-0.00055	13.1823	-0.6188	397.421
2255	0.5	Extremo 1A	45.898	-140.122	-0.00055	13.1823	-0.6185	472.245
2255	1	Extremo 1A	45.898	-121.071	-0.00055	13.1823	-0.6182	537.543
2255	0	Extremo 2A	45.9	-154.636	-0.00537	12.6873	-0.6207	390.337
2255	0.5	Extremo 2A	45.9	-135.585	-0.00537	12.6873	-0.618	462.893
2255	1	Extremo 2A	45.9	-116.534	-0.00537	12.6873	-0.6153	525.922
2256	0	Extremo 1A	45.898	-92.064	-0.00071	6.6535	-0.6189	525.438
2256	0.5	Extremo 1A	45.898	-73.013	-0.00071	6.6535	-0.6185	566.708
2256	1	Extremo 1A	45.898	-53.962	-0.00071	6.6535	-0.6181	598.451
2256	0	Extremo 2A	45.901	-87.523	-0.00695	6.1758	-0.6213	514.39
2256	0.5	Extremo 2A	45.901	-68.472	-0.00695	6.1758	-0.6178	553.389
2256	1	Extremo 2A	45.901	-49.421	-0.00695	6.1758	-0.6144	582.862
2257	0	Extremo 1A	45.898	-25.262	-0.00091	0.189	-0.6189	594.239
2257	0.5	Extremo 1A	45.898	-6.211	-0.00091	0.189	-0.6185	602.107
2257	1	Extremo 1A	45.898	12.84	-0.00091	0.189	-0.618	600.45
2257	0	Extremo 2A	45.902	-20.706	-0.00902	-0.2576	-0.6221	579.206
2257	0.5	Extremo 2A	45.902	-1.655	-0.00902	-0.2576	-0.6176	584.796
2257	1	Extremo 2A	45.902	17.396	-0.00902	-0.2576	-0.6131	580.861
2258	0	Extremo 1A	45.898	41.534	-0.00118	-6.2674	-0.619	603.966
2258	0.5	Extremo 1A	45.898	60.585	-0.00118	-6.2674	-0.6185	578.436
2258	1	Extremo 1A	45.898	79.636	-0.00118	-6.2674	-0.6179	543.381
2258	0	Extremo 2A	45.905	46.118	-0.012	-6.6557	-0.6232	584.906
2258	0.5	Extremo 2A	45.905	65.168	-0.012	-6.6557	-0.6173	557.085
2258	1	Extremo 2A	45.905	84.219	-0.012	-6.6557	-0.6115	519.738
2259	0	Extremo 1A	45.898	108.618	-0.00152	-12.7726	-0.6192	554.769
2259	0.5	Extremo 1A	45.898	127.669	-0.00152	-12.7726	-0.6184	495.697
2259	1	Extremo 1A	45.898	146.72	-0.00152	-12.7726	-0.6177	427.1
2259	0	Extremo 2A	45.908	113.255	-0.015	-13.0489	-0.6245	531.605
2259	0.5	Extremo 2A	45.908	132.306	-0.015	-13.0489	-0.6169	470.214
2259	1	Extremo 2A	45.908	151.357	-0.015	-13.0489	-0.6093	399.298
2260	0	Extremo 1A	45.898	176.814	-0.00197	-18.972	-0.6194	446.846
2260	0.5	Extremo 1A	45.898	195.865	-0.00197	-18.972	-0.6184	353.676
2260	1	Extremo 1A	45.898	214.916	-0.00197	-18.972	-0.6174	250.981
2260	0	Extremo 2A	45.912	181.562	-0.02	-19.0256	-0.6263	419.43
2260	0.5	Extremo 2A	45.912	200.613	-0.02	-19.0256	-0.6164	323.886
2260	1	Extremo 2A	45.912	219.664	-0.02	-19.0256	-0.6065	218.817
2261	0	Extremo 1A	45.898	248.647	-0.00254	-22.7613	-0.6196	279.687
2261	0.5	Extremo 1A	45.898	267.698	-0.00254	-22.7613	-0.6183	150.601
2261	1	Extremo 1A	45.898	286.749	-0.00254	-22.7613	-0.617	11.9895
2261	0	Extremo 2A	45.919	253.644	-0.026	-22.3477	-0.6286	247.724

2261	0.5	Extremo 2A	45.919	272.694	-0.026	-22.3477	-0.6157	116.14
2261	1	Extremo 2A	45.919	291.745	-0.026	-22.3477	-0.6029	-24.9702
2262	0	Extremo 1A	45.899	328.966	-0.00328	-16.8268	-0.6199	47.9259
2262	0.5	Extremo 1A	45.899	348.017	-0.00328	-16.8268	-0.6182	-121.32
2262	1	Extremo 1A	45.899	367.068	-0.00328	-16.8268	-0.6166	-300.091
2262	0	Extremo 2A	45.928	334.482	-0.033	-15.3915	-0.6315	10.7413
2262	0.5	Extremo 2A	45.928	353.533	-0.033	-15.3915	-0.6148	-161.263
2262	1	Extremo 2A	45.928	372.584	-0.033	-15.3915	-0.5981	-342.792
2263	0	Extremo 1A	45.899	409.155	-0.00425	13.931	-0.6203	-271.271
2263	0.5	Extremo 1A	45.899	428.206	-0.00425	13.931	-0.6181	-480.611
2263	1	Extremo 1A	45.899	447.257	-0.00425	13.931	-0.616	-699.477
2263	0	Extremo 2A	45.942	415.14	-0.044	17.4699	-0.6354	-315.348
2263	0.5	Extremo 2A	45.942	434.191	-0.044	17.4699	-0.6136	-527.681
2263	1	Extremo 2A	45.942	453.242	-0.044	17.4699	-0.5918	-749.539
2264	0	Extremo 1A	45.9	359.195	-0.0055	61.9564	-0.6208	-719.38
2264	0.5	Extremo 1A	45.9	378.246	-0.0055	61.9564	-0.618	-903.741
2264	1	Extremo 1A	45.9	397.297	-0.0055	61.9564	-0.6153	-1097.63
2264	0	Extremo 2A	45.961	361.453	-0.057	68.403	-0.6404	-773.589
2264	0.5	Extremo 2A	45.961	380.504	-0.057	68.403	-0.612	-959.078
2264	1	Extremo 2A	45.961	399.555	-0.057	68.403	-0.5836	-1154.09
2265	0	Extremo 1A	45.901	-378.452	-0.00713	-64.0919	-0.6214	-1096.4
2265	0.5	Extremo 1A	45.901	-359.401	-0.00713	-64.0919	-0.6178	-911.94
2265	1	Extremo 1A	45.901	-340.35	-0.00713	-64.0919	-0.6143	-737.002
2265	0	Extremo 2A	45.988	-401.61	-0.074	-60.1093	-0.647	-1157.81
2265	0.5	Extremo 2A	45.988	-382.559	-0.074	-60.1093	-0.61	-961.765
2265	1	Extremo 2A	45.988	-363.508	-0.074	-60.1093	-0.5729	-775.249
2266	0	Extremo 1A	45.902	-428.409	-0.00924	-16.0659	-0.6222	-714.651
2266	0.5	Extremo 1A	45.902	-409.358	-0.00924	-16.0659	-0.6176	-505.209
2266	1	Extremo 1A	45.902	-390.307	-0.00924	-16.0659	-0.613	-305.293
2266	0	Extremo 2A	46.027	-455.306	-0.097	-9.1789	-0.6555	-758.629
2266	0.5	Extremo 2A	46.027	-436.255	-0.097	-9.1789	-0.6072	-535.739
2266	1	Extremo 2A	46.027	-417.204	-0.097	-9.1789	-0.5589	-322.374
2267	0	Extremo 1A	45.905	-348.215	-0.012	14.694	-0.6233	-331.666
2267	0.5	Extremo 1A	45.905	-329.164	-0.012	14.694	-0.6173	-162.321
2267	1	Extremo 1A	45.905	-310.113	-0.012	14.694	-0.6113	-2.5014
2267	0	Extremo 2A	46.082	-374.667	-0.126	23.6745	-0.6666	-357.246
2267	0.5	Extremo 2A	46.082	-355.616	-0.126	23.6745	-0.6036	-174.675
2267	1	Extremo 2A	46.082	-336.565	-0.126	23.6745	-0.5405	-1.6294
2268	0	Extremo 1A	45.908	-267.887	-0.016	20.634	-0.6247	-35.9921
2268	0.5	Extremo 1A	45.908	-248.836	-0.016	20.634	-0.6169	93.1888
2268	1	Extremo 1A	45.908	-229.785	-0.016	20.634	-0.6091	212.844
2268	0	Extremo 2A	46.16	-293.865	-0.165	30.6108	-0.6811	-44.7619
2268	0.5	Extremo 2A	46.16	-274.814	-0.165	30.6108	-0.5988	97.4077
2268	1	Extremo 2A	46.16	-255.763	-0.165	30.6108	-0.5165	230.052
2269	0	Extremo 1A	45.912	-196.038	-0.02	16.8575	-0.6265	186.579
2269	0.5	Extremo 1A	45.912	-176.987	-0.02	16.8575	-0.6164	279.836
2269	1	Extremo 1A	45.912	-157.936	-0.02	16.8575	-0.6062	363.567
2269	0	Extremo 2A	46.274	-221.847	-0.214	27.2437	-0.6998	193.742
2269	0.5	Extremo 2A	46.274	-202.796	-0.214	27.2437	-0.5926	299.902
2269	1	Extremo 2A	46.274	-183.745	-0.214	27.2437	-0.4854	396.537
2270	0	Extremo 1A	45.919	-127.816	-0.026	10.6861	-0.6288	346.251
2270	0.5	Extremo 1A	45.919	-108.765	-0.026	10.6861	-0.6157	405.397
2270	1	Extremo 1A	45.919	-89.714	-0.026	10.6861	-0.6025	455.016
2270	0	Extremo 2A	46.438	-153.65	-0.279	21.1718	-0.7241	369.045
2270	0.5	Extremo 2A	46.438	-134.599	-0.279	21.1718	-0.5846	441.108
2270	1	Extremo 2A	46.438	-115.548	-0.279	21.1718	-0.4451	503.645
2271	0	Extremo 1A	45.928	-60.686	-0.034	4.2382	-0.6319	446.035
2271	0.5	Extremo 1A	45.928	-41.635	-0.034	4.2382	-0.6147	471.615
2271	1	Extremo 1A	45.928	-22.584	-0.034	4.2382	-0.5976	487.67
2271	0	Extremo 2A	46.682	-86.704	-0.361	14.587	-0.7551	484.51
2271	0.5	Extremo 2A	46.682	-67.653	-0.361	14.587	-0.5744	523.099
2271	1	Extremo 2A	46.682	-48.602	-0.361	14.587	-0.3937	552.163
2272	0	Extremo 1A	45.942	6.189	-0.045	-2.1046	-0.6358	486.511
2272	0.5	Extremo 1A	45.942	25.24	-0.045	-2.1046	-0.6135	478.653
2272	1	Extremo 1A	45.942	44.291	-0.045	-2.1046	-0.5912	461.27
2272	0	Extremo 2A	47.054	-20.219	-0.465	7.8178	-0.7944	541.041
2272	0.5	Extremo 2A	47.054	-1.168	-0.465	7.8178	-0.562	546.388
2272	1	Extremo 2A	47.054	17.883	-0.465	7.8178	-0.3297	542.209
2273	0	Extremo 1A	45.961	73.13	-0.058	-8.3476	-0.641	467.743
2273	0.5	Extremo 1A	45.961	92.181	-0.058	-8.3476	-0.6119	426.416
2273	1	Extremo 1A	45.961	111.232	-0.058	-8.3476	-0.5829	375.563
2273	0	Extremo 2A	47.644	45.998	-0.589	0.6939	-0.8427	539.168
2273	0.5	Extremo 2A	47.644	65.049	-0.589	0.6939	-0.5482	511.407
2273	1	Extremo 2A	47.644	84.1	-0.589	0.6939	-0.2536	474.119
2274	0	Extremo 1A	45.988	140.496	-0.076	-14.4404	-0.6477	389.748
2274	0.5	Extremo 1A	45.988	159.547	-0.076	-14.4404	-0.6098	314.737
2274	1	Extremo 1A	45.988	178.598	-0.076	-14.4404	-0.5719	230.201
2274	0	Extremo 2A	48.641	112.059	-0.728	-7.026	-0.8993	479.678
2274	0.5	Extremo 2A	48.641	131.11	-0.728	-7.026	-0.5356	418.886
2274	1	Extremo 2A	48.641	150.161	-0.728	-7.026	-0.1718	348.568
2275	0	Extremo 1A	46.027	209.304	-0.099	-19.7658	-0.6564	252.465
2275	0.5	Extremo 1A	46.027	228.355	-0.099	-19.7658	-0.607	143.05
2275	1	Extremo 1A	46.027	247.406	-0.099	-19.7658	-0.5576	24.1097
2275	0	Extremo 2A	50.445	178.397	-0.853	-15.1233	-0.9584	363.765
2275	0.5	Extremo 2A	50.445	197.448	-0.853	-15.1233	-0.532	269.804
2275	1	Extremo 2A	50.445	216.499	-0.853	-15.1233	-0.1056	166.318
2276	0	Extremo 1A	46.082	282.624	-0.129	-21.4963	-0.6677	54.7503
2276	0.5	Extremo 1A	46.082	301.674	-0.129	-21.4963	-0.6033	-91.3242
2276	1	Extremo 1A	46.082	320.725	-0.129	-21.4963	-0.5389	-246.924
2276	0	Extremo 2A	53.965	245.583	-0.889	-21.2618	-1.0004	192.139
2276	0.5	Extremo 2A	53.965	264.633	-0.889	-21.2618	-0.5561	64.585
2276	1	Extremo 2A	53.965	283.684	-0.889	-21.2618	-0.1118	-72.4944
2277	0	Extremo 1A	46.161	366.266	-0.168	-10.4257	-0.6825	-210.751
2277	0.5	Extremo 1A	46.161	385.317	-0.168	-10.4257	-0.5985	-398.647
2277	1	Extremo 1A	46.161	404.368	-0.168	-10.4257	-0.5144	-596.068
2277	0	Extremo 2A	61.334	305.939	-0.696	-17.8907	-0.9709	-38.4099
2277	0.5	Extremo 2A	61.334	324.99	-0.696	-17.8907	-0.6228	-196.142
2277	1	Extremo 2A	61.334	344.041	-0.696	-17.8907	-0.2746	-363.4
2278	0	Extremo 1A	46.274	449.532	-0.219	32.0005	-0.7017	-572.89
2278	0.5	Extremo 1A	46.274	468.583	-0.219	32.0005	-0.5921	-802.418
2278	1	Extremo 1A	46.274	487.634	-0.219	32.0005	-0.4826	-1041.47
2278	0	Extremo 2A	22.949	516.531	-0.522	6.2024	-0.5704	-327.075
2278	0.5	Extremo 2A	22.949	535.582	-0.522	6.2024	-0.3092	-590.103
2278	1	Extremo 2A	22.949	554.633	-0.522	6.2024	-0.0481	-862.657
2279	0	Extremo 1A	46.439	374.035	-0.285	96.3901	-0.7265	-1083.1
2279	0.5	Extremo 1A	46.439	393.086	-0.285	96.3901	-0.584	-1274.88
2279	1	Extremo 1A	46.439	412.136	-0.285	96.3901	-0.4415	-1476.18
2279	0	Extremo 2A	-15.436	558.866	-0.696	54.7284	-0.344	-866.353
2279	0.5	Extremo 2A	-15.436	577.917	-0.696	54.7284	0.0043	-1150.55
2279	1	Extremo 2A	-15.436	596.968	-0.696	54.7284	0.3525	-1444.27
2280	0	Extremo 1A	46.684	-538.229	-0.369	-50.6932	-0.7582	-1498.45
2280	0.5	Extremo 1A	46.684	-519.178	-0.369	-50.6932	-0.5736	-1234.1
2280	1	Extremo 1A	46.684	-500.127	-0.369	-50.6932	-0.389	-979.274
2280	0	Extremo 2A	-8.067	-434.618	-0.889	-105.999	-0.5069	-1413.91
2280	0.5	Extremo 2A	-8.067	-415.567	-0.889	-105.999	-0.0624	-1201.36
2280	1	Extremo 2A	-8.067	-396.516	-0.889	-105.999	0.3821	-998.338
2281	0	Extremo 1A	47.056	-614.042	-0.475	13.2193	-0.7983	-982.023
2281	0.5	Extremo 1A	47.056	-594.991	-0.475	13.2193	-0.561	-679.765
2281	1	Extremo 1A	47.056	-575.94	-0.475	13.2193	-0.3237	-387.032
2281	0	Extremo 2A	-4.547	-525.284	-0.854	-38.6022	-0.5133	-948.67
2281	0.5	Extremo 2A	-4.547	-506.233	-0.854	-38.6022	-0.0865	-690.791
2281	1	Extremo 2A	-4.547	-487.182	-0.854	-38.6022	0.3403	-442.437
2282	0	Extremo 1A	47.649	-531.519	-0.602	54.5141	-0.8478	-454.034
2282	0.5	Extremo 1A	47.649	-512.468	-0.602	54.5141	-0.5468	-193.038
2282	1	Extremo 1A	47.649	-493.417	-0.602	54.5141	-0.2459	58.4339
2282	0	Extremo 2A	-2.743	-443.658	-0.729	6.9216	-0.4472	-462.891
2282	0.5	Extremo 2A	-2.743	-424.607	-0.729	6.9216	-0.0828	-245.825
2282	1	Extremo 2A	-2.743	-405.556	-0.729	6.9216	0.2815	-38.2839
2283	0	Extremo 1A	48.648	-449.312	-0.744	63.4139	-0.9059	-20.4146
2283	0.5	Extremo 1A	48.648	-430.261	-0.744	63.4139	-0.5339	199.479
2283	1	Extremo 1A	48.648	-411.21	-0.744	63.4139	-0.1618	409.846
2283	0	Extremo 2A	-1.747	-360.129	-0.591	19.5574	-0.3656	-73.833
2283	0.5	Extremo 2A	-1.747	-341.078	-0.591	19.5574	-0.0702	101.469
2283	1	Extremo 2A	-1.747	-322.027	-0.591	19.5574	0.2251	267.245
2284	0	Extremo 1A	50.455	-378.773	-0.874	57.8558	-0.9669	338.612
2284	0.5	Extremo 1A	50.455	-359.722	-0.874	57.8558	-0.5297	523.236
2284	1	Extremo 1A	50.455	-340.671	-0.874	57.8558	-0.0925	698.334
2284	0	Extremo 2A	-1.156	-286.885	-0.467	18.5287	-0.2897	236.5
2284	0.5	Extremo 2A	-1.156	-267.834	-0.467	18.5287	-0.0563	375.18
2284	1	Extremo 2A	-1.156	-248.783	-0.467	18.5287	0.1771	504.334
2285	0	Extremo 1A	53.981	-316.761	-0.917	46.1043	-1.0114	638.726
2285	0.5	Extremo 1A	53.981	-297.71	-0.917	46.1043	-0.5531	792.344
2285	1	Extremo 1A	53.981	-278.659	-0.917	46.1043	-0.0948	936.436
2285	0	Extremo 2A	-0.784	-218.138	-0.364	13.4842	-0.226	481.688

2285	0.5	Extremo 2A	-0.784	-199.087	-0.364	13.4842	-0.0439	585.995
2285	1	Extremo 2A	-0.784	-180.037	-0.364	13.4842	0.1382	680.776
2286	0	Extremo 1A	61.358	-273.939	-0.733	28.4572	-0.9851	889.636
2286	0.5	Extremo 1A	61.358	-254.888	-0.733	28.4572	-0.6189	1021.84
2286	1	Extremo 1A	61.358	-235.837	-0.733	28.4572	-0.2526	1144.52
2286	0	Extremo 2A	-0.54	-150.787	-0.283	7.4301	-0.1749	666.13
2286	0.5	Extremo 2A	-0.54	-131.736	-0.283	7.4301	-0.0336	736.761
2286	1	Extremo 2A	-0.54	-112.685	-0.283	7.4301	0.1076	797.866
2287	0	Extremo 1A	22.984	-80.666	-0.57	-3.0962	-0.5889	1124.96
2287	0.5	Extremo 1A	22.984	-61.615	-0.57	-3.0962	-0.3041	1160.53
2287	1	Extremo 1A	22.984	-42.564	-0.57	-3.0962	-0.0193	1186.57
2287	0	Extremo 2A	-0.375	-83.796	-0.219	1.0435	-0.1351	791.001
2287	0.5	Extremo 2A	-0.375	-64.745	-0.219	1.0435	-0.0255	828.136
2287	1	Extremo 2A	-0.375	-45.694	-0.219	1.0435	0.084	855.746
2288	0	Extremo 1A	-15.385	112.735	-0.758	-34.626	-0.3678	1208.08
2288	0.5	Extremo 1A	-15.385	131.786	-0.758	-34.626	0.0111	1146.95
2288	1	Extremo 1A	-15.385	150.837	-0.758	-34.626	0.39	1076.29
2288	0	Extremo 2A	-0.262	-16.75	-0.171	-5.592	-0.1044	856.735
2288	0.5	Extremo 2A	-0.262	2.301	-0.171	-5.592	-0.0191	860.347
2288	1	Extremo 2A	-0.262	21.352	-0.171	-5.592	0.0661	854.434
2289	0	Extremo 1A	-7.993	156.095	-0.969	-52.0038	-0.5377	1125.12
2289	0.5	Extremo 1A	-7.993	175.146	-0.969	-52.0038	-0.0533	1042.31
2289	1	Extremo 1A	-7.993	194.197	-0.969	-52.0038	0.431	949.974
2289	0	Extremo 2A	-0.182	50.867	-0.134	-12.3493	-0.0811	863.633
2289	0.5	Extremo 2A	-0.182	69.918	-0.134	-12.3493	-0.0142	833.437
2289	1	Extremo 2A	-0.182	88.969	-0.134	-12.3493	0.0527	793.715
2290	0	Extremo 1A	-4.44	219.53	-0.957	-62.4426	-0.5525	1011.44
2290	0.5	Extremo 1A	-4.44	238.581	-0.957	-62.4426	-0.0741	896.913
2290	1	Extremo 1A	-4.44	257.632	-0.957	-62.4426	0.4043	772.859
2290	0	Extremo 2A	-0.126	120.356	-0.107	-18.3276	-0.0636	811.619
2290	0.5	Extremo 2A	-0.126	139.407	-0.107	-18.3276	-0.0103	746.678
2290	1	Extremo 2A	-0.126	158.458	-0.107	-18.3276	0.0431	672.211
2291	0	Extremo 1A	-2.59	292.025	-0.862	-63.9609	-0.4959	843.975
2291	0.5	Extremo 1A	-2.59	311.076	-0.862	-63.9609	-0.0649	693.199
2291	1	Extremo 1A	-2.59	330.127	-0.862	-63.9609	0.3661	532.898
2291	0	Extremo 2A	-0.086	194.146	-0.087	-20.1837	-0.0504	698.299
2291	0.5	Extremo 2A	-0.086	213.197	-0.087	-20.1837	-0.007	596.464
2291	1	Extremo 2A	-0.086	232.248	-0.087	-20.1837	0.0365	485.103
2292	0	Extremo 1A	-1.528	365.865	-0.76	-48.403	-0.421	603.442
2292	0.5	Extremo 1A	-1.528	384.916	-0.76	-48.403	-0.0409	415.746
2292	1	Extremo 1A	-1.528	403.967	-0.76	-48.403	0.3393	218.526
2292	0	Extremo 2A	-0.056	268.483	-0.073	-10.7474	-0.0402	512.977
2292	0.5	Extremo 2A	-0.056	287.534	-0.073	-10.7474	-0.0038	373.973
2292	1	Extremo 2A	-0.056	306.585	-0.073	-10.7474	0.0326	225.443
2293	0	Extremo 1A	-0.846	366.935	-0.668	-19.2341	-0.3342	262.696
2293	0.5	Extremo 1A	-0.846	385.986	-0.668	-19.2341	-0.00037	74.4659
2293	1	Extremo 1A	-0.846	405.037	-0.668	-19.2341	0.3335	-123.29
2293	0	Extremo 2A	-0.034	283.219	-0.062	7.533	-0.0307	235.732
2293	0.5	Extremo 2A	-0.034	302.27	-0.062	7.533	0.00028	89.3602
2293	1	Extremo 2A	-0.034	321.321	-0.062	7.533	0.0313	-66.5375
2294	0	Extremo 1A	-0.355	-17.307	-0.517	-78.4304	-0.2006	-68.4953
2294	0.5	Extremo 1A	-0.355	1.744	-0.517	-78.4304	0.058	-64.6047
2294	1	Extremo 1A	-0.355	20.795	-0.517	-78.4304	0.3167	-70.2396
2294	0	Extremo 2A	-0.015	-20.257	-0.047	-49.5468	-0.0178	-42.2629
2294	0.5	Extremo 2A	-0.015	-1.206	-0.047	-49.5468	0.0055	-36.8972
2294	1	Extremo 2A	-0.015	17.845	-0.047	-49.5468	0.0288	-41.057
2295	0	Extremo 1A	-0.43	-8.958	1.624	-27.0955	0.8569	-16.8618
2295	0.5	Extremo 1A	-0.43	10.093	1.624	-27.0955	0.0452	-17.1458
2295	1	Extremo 1A	-0.43	29.144	1.624	-27.0955	-0.7666	-26.9552
2295	0	Extremo 2A	-0.43	-8.958	1.624	-27.0955	0.8569	-16.8619
2295	0.5	Extremo 2A	-0.43	10.093	1.624	-27.0955	0.0452	-17.1458
2295	1	Extremo 2A	-0.43	29.144	1.624	-27.0955	-0.7666	-26.9552
2296	0	Extremo 1A	-0.735	-184.484	1.37	23.6576	0.4009	-23.6538
2296	0.5	Extremo 1A	-0.735	-165.433	1.37	23.6576	-0.2842	63.8255
2296	1	Extremo 1A	-0.735	-146.382	1.37	23.6576	-0.9694	141.779
2296	0	Extremo 2A	-0.735	-184.484	1.37	23.6576	0.4009	-23.6538
2296	0.5	Extremo 2A	-0.735	-165.433	1.37	23.6576	-0.2842	63.8255
2296	1	Extremo 2A	-0.735	-146.382	1.37	23.6576	-0.9694	141.779
2297	0	Extremo 1A	-0.794	-145.081	0.917	14.0297	0.0171	162.575
2297	0.5	Extremo 1A	-0.794	-126.03	0.917	14.0297	-0.4415	230.353
2297	1	Extremo 1A	-0.794	-106.979	0.917	14.0297	-0.9001	288.605
2297	0	Extremo 2A	-0.794	-145.081	0.917	14.0297	0.0171	162.575
2297	0.5	Extremo 2A	-0.794	-126.03	0.917	14.0297	-0.4415	230.353
2297	1	Extremo 2A	-0.794	-106.979	0.917	14.0297	-0.9001	288.605
2298	0	Extremo 1A	-0.675	-56.293	0.613	3.9534	-0.2037	294.293
2298	0.5	Extremo 1A	-0.675	-37.242	0.613	3.9534	-0.51	317.676
2298	1	Extremo 1A	-0.675	-18.191	0.613	3.9534	-0.8163	331.534
2298	0	Extremo 2A	-0.675	-56.293	0.613	3.9534	-0.2037	294.293
2298	0.5	Extremo 2A	-0.675	-37.242	0.613	3.9534	-0.51	317.677
2298	1	Extremo 2A	-0.675	-18.191	0.613	3.9534	-0.8163	331.535
2299	0	Extremo 1A	-0.464	35.598	0.419	-0.0125	-0.3484	331.03
2299	0.5	Extremo 1A	-0.464	54.648	0.419	-0.0125	-0.5578	308.468
2299	1	Extremo 1A	-0.464	73.699	0.419	-0.0125	-0.7673	276.381
2299	0	Extremo 2A	-0.464	35.597	0.419	-0.0125	-0.3484	331.03
2299	0.5	Extremo 2A	-0.464	54.648	0.419	-0.0125	-0.5578	308.469
2299	1	Extremo 2A	-0.464	73.699	0.419	-0.0125	-0.7673	276.382
2300	0	Extremo 1A	-0.213	126.024	0.284	-1.4685	-0.4573	273.991
2300	0.5	Extremo 1A	-0.213	145.075	0.284	-1.4685	-0.5993	206.216
2300	1	Extremo 1A	-0.213	164.126	0.284	-1.4685	-0.7412	128.916
2300	0	Extremo 2A	-0.213	126.024	0.284	-1.4685	-0.4573	273.991
2300	0.5	Extremo 2A	-0.213	145.075	0.284	-1.4685	-0.5993	206.217
2300	1	Extremo 2A	-0.213	164.126	0.284	-1.4685	-0.7412	128.917
2301	0	Extremo 1A	0.046	218.287	0.185	-4.4074	-0.5411	125.987
2301	0.5	Extremo 1A	0.046	237.338	0.185	-4.4074	-0.6336	12.0811
2301	1	Extremo 1A	0.046	256.389	0.185	-4.4074	-0.7262	-111.351
2301	0	Extremo 2A	0.046	218.287	0.185	-4.4074	-0.5411	125.988
2301	0.5	Extremo 2A	0.046	237.338	0.185	-4.4074	-0.6336	12.0814
2301	1	Extremo 2A	0.046	256.389	0.185	-4.4074	-0.7262	-111.35
2302	0	Extremo 1A	0.295	316.181	0.113	-16.4869	-0.6035	-116.164
2302	0.5	Extremo 1A	0.295	335.232	0.113	-16.4869	-0.6602	-279.017
2302	1	Extremo 1A	0.295	354.283	0.113	-16.4869	-0.717	-451.396
2302	0	Extremo 2A	0.295	316.181	0.113	-16.4869	-0.6035	-116.163
2302	0.5	Extremo 2A	0.295	335.232	0.113	-16.4869	-0.6602	-279.017
2302	1	Extremo 2A	0.295	354.283	0.113	-16.4869	-0.717	-451.395
2303	0	Extremo 1A	0.521	402.266	0.063	-49.5	-0.6483	-470.291
2303	0.5	Extremo 1A	0.521	421.317	0.063	-49.5	-0.6799	-676.187
2303	1	Extremo 1A	0.521	440.368	0.063	-49.5	-0.7115	-891.608
2303	0	Extremo 2A	0.521	402.266	0.063	-49.5	-0.6483	-470.291
2303	0.5	Extremo 2A	0.521	421.317	0.063	-49.5	-0.6799	-676.187
2303	1	Extremo 2A	0.521	440.368	0.063	-49.5	-0.7115	-891.608
2304	0	Extremo 1A	0.721	324.704	0.029	-80.6019	-0.6796	-952.621
2304	0.5	Extremo 1A	0.721	343.755	0.029	-80.6019	-0.6943	-1119.74
2304	1	Extremo 1A	0.721	362.806	0.029	-80.6019	-0.7089	-1296.38
2304	0	Extremo 2A	0.721	324.704	0.029	-80.6019	-0.6796	-952.621
2304	0.5	Extremo 2A	0.721	343.755	0.029	-80.6019	-0.6943	-1119.74
2304	1	Extremo 2A	0.721	362.806	0.029	-80.6019	-0.7089	-1296.38
2305	0	Extremo 1A	0.892	-454.548	0.00742	97.1278	-0.7009	-1289.62
2305	0.5	Extremo 1A	0.892	-435.497	0.00742	97.1278	-0.7046	-1067.11
2305	1	Extremo 1A	0.892	-416.446	0.00742	97.1278	-0.7083	-854.127
2305	0	Extremo 2A	0.892	-454.547	0.00742	97.1277	-0.7009	-1289.62
2305	0.5	Extremo 2A	0.892	-435.497	0.00742	97.1277	-0.7046	-1067.11
2305	1	Extremo 2A	0.892	-416.446	0.00742	97.1277	-0.7083	-854.126
2306	0	Extremo 1A	1.036	-532.109	-0.00594	65.6371	-0.7149	-779.721
2306	0.5	Extremo 1A	1.036	-513.058	-0.00594	65.6371	-0.7119	-518.429
2306	1	Extremo 1A	1.036	-494.007	-0.00594	65.6371	-0.709	-266.663
2306	0	Extremo 2A	1.036	-532.108	-0.00594	65.6371	-0.7149	-779.721
2306	0.5	Extremo 2A	1.036	-513.057	-0.00594	65.6371	-0.7119	-518.429
2306	1	Extremo 2A	1.036	-494.007	-0.00594	65.6371	-0.709	-266.663
2307	0	Extremo 1A	1.154	-446.018	-0.013	31.7573	-0.7239	-234.748
2307	0.5	Extremo 1A	1.154	-426.967	-0.013	31.7573	-0.7172	-16.5015
2307	1	Extremo 1A	1.154	-407.916	-0.013	31.7573	-0.7105	192.219
2307	0	Extremo 2A	1.154	-446.018	-0.013	31.7573	-0.7239	-234.747
2307	0.5	Extremo 2A	1.154	-426.967	-0.013	31.7573	-0.7172	-16.5013
2307	1	Extremo 2A	1.154	-407.916	-0.013	31.7573	-0.7105	192.219
2308	0	Extremo 1A	1.249	-348.147	-0.017	18.1784	-0.7295	209.297
2308	0.5	Extremo 1A	1.249	-329.096	-0.017	18.1784	-0.7209	378.608
2308	1	Extremo 1A	1.249	-310.045	-0.017	18.1784	-0.7124	538.393
2308	0	Extremo 2A	1.249	-348.147	-0.017	18.1784	-0.7295	209.297
2308	0.5	Extremo 2A	1.249	-329.096	-0.017	18.1784	-0.7209	378.608
2308	1	Extremo 2A	1.249	-310.045	-0.017	18.1784	-0.7124	538.393
2309	0	Extremo 1A	1.326	-256.158	-0.018	13.0237	-0.7327	552.235
2309	0.5	Extremo 1A	1.326	-237.107	-0.018	13.0237	-0.7236	675.551
2309	1	Extremo 1A	1.326	-218.056	-0.018	13.0237	-0.7144	789.342
2309	0	Extremo 2A	1.326	-256.158	-0.018	13.0237	-0.7327	552.235

2309	0.5	Extremo 2A	1.326	-237.107	-0.018	13.0237	-0.7236	675.551
2309	1	Extremo 2A	1.326	-218.056	-0.018	13.0237	-0.7144	789.341
2310	0	Extremo 1A	1.387	-167.009	-0.018	9.1045	-0.7344	800.516
2310	0.5	Extremo 1A	1.387	-147.958	-0.018	9.1045	-0.7254	879.258
2310	1	Extremo 1A	1.387	-128.907	-0.018	9.1045	-0.7165	948.474
2310	0	Extremo 2A	1.387	-167.008	-0.018	9.1045	-0.7344	800.516
2310	0.5	Extremo 2A	1.387	-147.957	-0.018	9.1045	-0.7254	879.257
2310	1	Extremo 2A	1.387	-128.907	-0.018	9.1045	-0.7165	948.473
2311	0	Extremo 1A	1.436	-78.474	-0.017	4.5042	-0.7351	955.448
2311	0.5	Extremo 1A	1.436	-59.423	-0.017	4.5042	-0.7267	989.922
2311	1	Extremo 1A	1.436	-40.372	-0.017	4.5042	-0.7184	1014.87
2311	0	Extremo 2A	1.436	-78.474	-0.017	4.5042	-0.7351	955.447
2311	0.5	Extremo 2A	1.436	-59.423	-0.017	4.5042	-0.7267	989.922
2311	1	Extremo 2A	1.436	-40.372	-0.017	4.5042	-0.7184	1014.87
2312	0	Extremo 1A	1.474	10.031	-0.015	-0.6363	-0.7351	1016.58
2312	0.5	Extremo 1A	1.474	29.082	-0.015	-0.6363	-0.7276	1006.8
2312	1	Extremo 1A	1.474	48.133	-0.015	-0.6363	-0.7201	987.5
2312	0	Extremo 2A	1.474	10.032	-0.015	-0.6363	-0.7351	1016.58
2312	0.5	Extremo 2A	1.474	29.083	-0.015	-0.6363	-0.7276	1006.8
2312	1	Extremo 2A	1.474	48.134	-0.015	-0.6363	-0.7201	987.499
2313	0	Extremo 1A	1.503	98.51	-0.013	-5.6421	-0.7349	983.667
2313	0.5	Extremo 1A	1.503	117.561	-0.013	-5.6421	-0.7283	929.649
2313	1	Extremo 1A	1.503	136.612	-0.013	-5.6421	-0.7216	866.106
2313	0	Extremo 2A	1.503	98.51	-0.013	-5.6421	-0.7349	983.666
2313	0.5	Extremo 2A	1.503	117.561	-0.013	-5.6421	-0.7283	929.648
2313	1	Extremo 2A	1.503	136.612	-0.013	-5.6421	-0.7216	866.105
2314	0	Extremo 1A	1.527	186.978	-0.011	-9.8278	-0.7344	857.215
2314	0.5	Extremo 1A	1.527	206.029	-0.011	-9.8278	-0.7287	758.963
2314	1	Extremo 1A	1.527	225.08	-0.011	-9.8278	-0.723	651.186
2314	0	Extremo 2A	1.527	186.978	-0.011	-9.8278	-0.7344	857.214
2314	0.5	Extremo 2A	1.527	206.029	-0.011	-9.8278	-0.7287	758.962
2314	1	Extremo 2A	1.527	225.08	-0.011	-9.8278	-0.723	651.185
2315	0	Extremo 1A	1.545	276.121	-0.00975	-13.0805	-0.7339	638.567
2315	0.5	Extremo 1A	1.545	295.172	-0.00975	-13.0805	-0.729	495.744
2315	1	Extremo 1A	1.545	314.223	-0.00975	-13.0805	-0.7241	343.395
2315	0	Extremo 2A	1.545	276.122	-0.00975	-13.0805	-0.7339	638.566
2315	0.5	Extremo 2A	1.545	295.172	-0.00975	-13.0805	-0.729	495.743
2315	1	Extremo 2A	1.545	314.223	-0.00975	-13.0805	-0.7241	343.394
2316	0	Extremo 1A	1.558	368.516	-0.00823	-17.6335	-0.7333	328.908
2316	0.5	Extremo 1A	1.558	387.566	-0.00823	-17.6335	-0.7292	139.887
2316	1	Extremo 1A	1.558	406.617	-0.00823	-17.6335	-0.7251	-58.6588
2316	0	Extremo 2A	1.558	368.516	-0.00823	-17.6335	-0.7333	328.907
2316	0.5	Extremo 2A	1.558	387.567	-0.00823	-17.6335	-0.7292	139.886
2316	1	Extremo 2A	1.558	406.618	-0.00823	-17.6335	-0.7251	-58.6601
2317	0	Extremo 1A	1.569	467.684	-0.00688	-31.8034	-0.7327	-75.582
2317	0.5	Extremo 1A	1.569	486.735	-0.00688	-31.8034	-0.7293	-314.187
2317	1	Extremo 1A	1.569	505.786	-0.00688	-31.8034	-0.7259	-562.317
2317	0	Extremo 2A	1.569	467.684	-0.00688	-31.8034	-0.7327	-75.5833
2317	0.5	Extremo 2A	1.569	486.735	-0.00688	-31.8034	-0.7293	-314.188
2317	1	Extremo 2A	1.569	505.786	-0.00688	-31.8034	-0.7259	-562.318
2318	0	Extremo 1A	1.577	553.211	-0.00571	-69.3476	-0.7322	-594.996
2318	0.5	Extremo 1A	1.577	572.262	-0.00571	-69.3476	-0.7294	-876.364
2318	1	Extremo 1A	1.577	591.313	-0.00571	-69.3476	-0.7265	-1167.26
2318	0	Extremo 2A	1.577	553.211	-0.00571	-69.3476	-0.7322	-594.998
2318	0.5	Extremo 2A	1.577	572.262	-0.00571	-69.3476	-0.7294	-876.366
2318	1	Extremo 2A	1.577	591.313	-0.00571	-69.3476	-0.7265	-1167.26
2319	0	Extremo 1A	1.584	449.417	-0.00472	-104.088	-0.7318	-1247.6
2319	0.5	Extremo 1A	1.584	468.468	-0.00472	-104.088	-0.7294	-1477.07
2319	1	Extremo 1A	1.584	487.519	-0.00472	-104.088	-0.7271	-1716.06
2319	0	Extremo 2A	1.584	449.417	-0.00472	-104.088	-0.7318	-1247.6
2319	0.5	Extremo 2A	1.584	468.468	-0.00472	-104.088	-0.7294	-1477.07
2319	1	Extremo 2A	1.584	487.519	-0.00472	-104.088	-0.7271	-1716.07
2320	0	Extremo 1A	1.589	-466.178	-0.00387	103.112	-0.7314	-1716.62
2320	0.5	Extremo 1A	1.589	-447.127	-0.00387	103.112	-0.7295	-1488.29
2320	1	Extremo 1A	1.589	-428.076	-0.00387	103.112	-0.7275	-1269.49
2320	0	Extremo 2A	1.589	-466.178	-0.00387	103.112	-0.7314	-1716.62
2320	0.5	Extremo 2A	1.589	-447.128	-0.00387	103.112	-0.7295	-1488.29
2320	1	Extremo 2A	1.589	-428.077	-0.00387	103.112	-0.7275	-1269.49
2321	0	Extremo 1A	1.592	-569.972	-0.00317	68.3755	-0.7311	-1190.25
2321	0.5	Extremo 1A	1.592	-550.921	-0.00317	68.3755	-0.7295	-910.03
2321	1	Extremo 1A	1.592	-531.87	-0.00317	68.3755	-0.7279	-639.332
2321	0	Extremo 2A	1.592	-569.972	-0.00317	68.3755	-0.7311	-1190.25
2321	0.5	Extremo 2A	1.592	-550.922	-0.00317	68.3755	-0.7295	-910.031
2321	1	Extremo 2A	1.592	-531.871	-0.00317	68.3755	-0.7279	-639.333
2322	0	Extremo 1A	1.595	-484.444	-0.00258	30.8411	-0.7308	-607.751
2322	0.5	Extremo 1A	1.595	-465.393	-0.00258	30.8411	-0.7295	-370.292
2322	1	Extremo 1A	1.595	-446.343	-0.00258	30.8411	-0.7282	-142.358
2322	0	Extremo 2A	1.595	-484.445	-0.00258	30.8411	-0.7308	-607.752
2322	0.5	Extremo 2A	1.595	-465.394	-0.00258	30.8411	-0.7295	-370.292
2322	1	Extremo 2A	1.595	-446.343	-0.00258	30.8411	-0.7282	-142.358
2323	0	Extremo 1A	1.598	-385.277	-0.00209	16.6891	-0.7305	-126.526
2323	0.5	Extremo 1A	1.598	-366.226	-0.00209	16.6891	-0.7295	61.3499
2323	1	Extremo 1A	1.598	-347.175	-0.00209	16.6891	-0.7284	239.7
2323	0	Extremo 2A	1.598	-385.277	-0.00209	16.6891	-0.7305	-126.526
2323	0.5	Extremo 2A	1.598	-366.226	-0.00209	16.6891	-0.7295	61.3501
2323	1	Extremo 2A	1.598	-347.175	-0.00209	16.6891	-0.7284	239.701
2324	0	Extremo 1A	1.599	-292.884	-0.0017	12.1678	-0.7303	253.109
2324	0.5	Extremo 1A	1.599	-273.833	-0.0017	12.1678	-0.7295	394.789
2324	1	Extremo 1A	1.599	-254.783	-0.0017	12.1678	-0.7286	526.943
2324	0	Extremo 2A	1.599	-292.885	-0.0017	12.1678	-0.7303	253.11
2324	0.5	Extremo 2A	1.599	-273.834	-0.0017	12.1678	-0.7295	394.789
2324	1	Extremo 2A	1.599	-254.783	-0.0017	12.1678	-0.7286	526.944
2325	0	Extremo 1A	1.601	-203.746	-0.00137	8.9699	-0.7302	538.506
2325	0.5	Extremo 1A	1.601	-184.695	-0.00137	8.9699	-0.7295	635.617
2325	1	Extremo 1A	1.601	-165.644	-0.00137	8.9699	-0.7288	723.202
2325	0	Extremo 2A	1.601	-203.747	-0.00137	8.9699	-0.7302	538.507
2325	0.5	Extremo 2A	1.601	-184.696	-0.00137	8.9699	-0.7295	635.618
2325	1	Extremo 2A	1.601	-165.645	-0.00137	8.9699	-0.7288	723.203
2326	0	Extremo 1A	1.602	-115.291	-0.0011	4.8794	-0.73	731.079
2326	0.5	Extremo 1A	1.602	-96.24	-0.0011	4.8794	-0.7295	783.962
2326	1	Extremo 1A	1.602	-77.189	-0.0011	4.8794	-0.7289	827.319
2326	0	Extremo 2A	1.602	-115.291	-0.0011	4.8794	-0.73	731.08
2326	0.5	Extremo 2A	1.602	-96.24	-0.0011	4.8794	-0.7295	783.963
2326	1	Extremo 2A	1.602	-77.19	-0.0011	4.8794	-0.7289	827.321
2327	0	Extremo 1A	1.602	-26.84	-0.00089	0.0383	-0.7299	830.211
2327	0.5	Extremo 1A	1.602	-7.789	-0.00089	0.0383	-0.7295	838.868
2327	1	Extremo 1A	1.602	11.262	-0.00089	0.0383	-0.729	838
2327	0	Extremo 2A	1.602	-26.841	-0.00089	0.0383	-0.7299	830.213
2327	0.5	Extremo 2A	1.602	-7.79	-0.00089	0.0383	-0.7295	838.871
2327	1	Extremo 2A	1.602	11.261	-0.00089	0.0383	-0.729	838.003
2328	0	Extremo 1A	1.603	61.611	-0.00071	-4.8215	-0.7298	835.48
2328	0.5	Extremo 1A	1.603	80.662	-0.00071	-4.8215	-0.7295	799.911
2328	1	Extremo 1A	1.603	99.713	-0.00071	-4.8215	-0.7291	754.818
2328	0	Extremo 2A	1.603	61.61	-0.00071	-4.8215	-0.7298	835.482
2328	0.5	Extremo 2A	1.603	80.661	-0.00071	-4.8215	-0.7295	799.914
2328	1	Extremo 2A	1.603	99.712	-0.00071	-4.8215	-0.7291	754.821
2329	0	Extremo 1A	1.603	150.063	-0.00057	-8.9658	-0.7298	747.278
2329	0.5	Extremo 1A	1.603	169.114	-0.00057	-8.9658	-0.7295	667.484
2329	1	Extremo 1A	1.603	188.165	-0.00057	-8.9658	-0.7292	578.164
2329	0	Extremo 2A	1.603	150.063	-0.00057	-8.9658	-0.7298	747.282
2329	0.5	Extremo 2A	1.603	169.114	-0.00057	-8.9658	-0.7295	667.488
2329	1	Extremo 2A	1.603	188.164	-0.00057	-8.9658	-0.7292	578.168
2330	0	Extremo 1A	1.604	239.164	-0.00046	-12.2296	-0.7297	566.863
2330	0.5	Extremo 1A	1.604	258.215	-0.00046	-12.2296	-0.7295	442.518
2330	1	Extremo 1A	1.604	277.266	-0.00046	-12.2296	-0.7292	308.647
2330	0	Extremo 2A	1.604	239.164	-0.00046	-12.2296	-0.7297	566.866
2330	0.5	Extremo 2A	1.604	258.215	-0.00046	-12.2296	-0.7295	442.522
2330	1	Extremo 2A	1.604	277.266	-0.00046	-12.2296	-0.7292	308.652
2331	0	Extremo 1A	1.604	331.392	-0.00036	-16.7231	-0.7296	295.383
2331	0.5	Extremo 1A	1.604	350.442	-0.00036	-16.7231	-0.7295	124.925
2331	1	Extremo 1A	1.604	369.493	-0.00036	-16.7231	-0.7293	-55.0591
2331	0	Extremo 2A	1.604	331.391	-0.00036	-16.7231	-0.7296	295.388
2331	0.5	Extremo 2A	1.604	350.442	-0.00036	-16.7231	-0.7295	124.93
2331	1	Extremo 2A	1.604	369.493	-0.00036	-16.7231	-0.7293	-55.0541
2332	0	Extremo 1A	1.604	430.145	-0.00029	-30.4381	-0.7296	-70.797
2332	0.5	Extremo 1A	1.604	449.196	-0.00029	-30.4381	-0.7295	-290.632
2332	1	Extremo 1A	1.604	468.247	-0.00029	-30.4381	-0.7293	-519.993
2332	0	Extremo 2A	1.604	430.145	-0.00029	-30.438	-0.7296	-70.792
2332	0.5	Extremo 2A	1.604	449.196	-0.00029	-30.438	-0.7295	-290.627
2332	1	Extremo 2A	1.604	468.247	-0.00029	-30.438	-0.7293	-519.988
2333	0	Extremo 1A	1.604	515.726	-0.00023	-66.6345	-0.7296	-551.002
2333	0.5	Extremo 1A	1.604	534.777	-0.00023	-66.6345	-0.7295	-813.628
2333	1	Extremo 1A	1.604	553.828	-0.00023	-66.6345	-0.7293	-1085.78
2333	0	Extremo 2A	1.604	515.726	-0.00023	-66.6343	-0.7296	-550.996

2333	0.5	Extremo 2A	1.604	534.777	-0.00023	-66.6343	-0.7295	-813.622
2333	1	Extremo 2A	1.604	553.828	-0.00023	-66.6343	-0.7293	-1085.77
2334	0	Extremo 1A	1.605	418.541	-0.00018	-100.05	-0.7295	-1162.78
2334	0.5	Extremo 1A	1.605	437.592	-0.00018	-100.05	-0.7295	-1376.82
2334	1	Extremo 1A	1.605	456.643	-0.00018	-100.05	-0.7294	-1600.38
2334	0	Extremo 2A	1.605	418.541	-0.00018	-100.05	-0.7295	-1162.78
2334	0.5	Extremo 2A	1.605	437.592	-0.00018	-100.05	-0.7295	-1376.81
2334	1	Extremo 2A	1.605	456.643	-0.00018	-100.05	-0.7294	-1600.37
2335	0	Extremo 1A	1.605	-462.377	-0.00015	100.142	-0.7295	-1600.29
2335	0.5	Extremo 1A	1.605	-443.326	-0.00015	100.142	-0.7295	-1373.86
2335	1	Extremo 1A	1.605	-424.275	-0.00015	100.142	-0.7294	-1156.96
2335	0	Extremo 2A	1.605	-462.375	-0.00015	100.142	-0.7295	-1600.28
2335	0.5	Extremo 2A	1.605	-443.324	-0.00015	100.142	-0.7295	-1373.86
2335	1	Extremo 2A	1.605	-424.273	-0.00015	100.142	-0.7294	-1156.96
2336	0	Extremo 1A	1.605	-559.562	-0.00012	66.726	-0.7295	-1079.78
2336	0.5	Extremo 1A	1.605	-540.511	-0.00012	66.726	-0.7295	-804.76
2336	1	Extremo 1A	1.605	-521.46	-0.00012	66.726	-0.7294	-539.267
2336	0	Extremo 2A	1.605	-559.56	-0.00012	66.7259	-0.7295	-1079.77
2336	0.5	Extremo 2A	1.605	-540.509	-0.00012	66.7259	-0.7295	-804.756
2336	1	Extremo 2A	1.605	-521.458	-0.00012	66.7259	-0.7294	-539.265
2337	0	Extremo 1A	1.605	-473.981	-9.3E-05	30.5279	-0.7295	-508.081
2337	0.5	Extremo 1A	1.605	-454.93	-9.3E-05	30.5279	-0.7295	-275.854
2337	1	Extremo 1A	1.605	-435.879	-9.3E-05	30.5279	-0.7294	-53.1513
2337	0	Extremo 2A	1.605	-473.979	-9.3E-05	30.5278	-0.7295	-508.079
2337	0.5	Extremo 2A	1.605	-454.928	-9.3E-05	30.5278	-0.7295	-275.852
2337	1	Extremo 2A	1.605	-435.877	-9.3E-05	30.5278	-0.7294	-53.151
2338	0	Extremo 1A	1.605	-375.228	-7.4E-05	16.8098	-0.7295	-37.2373
2338	0.5	Extremo 1A	1.605	-356.177	-7.4E-05	16.8098	-0.7294	145.614
2338	1	Extremo 1A	1.605	-337.126	-7.4E-05	16.8098	-0.7294	318.939
2338	0	Extremo 2A	1.605	-375.225	-7.4E-05	16.8098	-0.7295	-37.2371
2338	0.5	Extremo 2A	1.605	-356.175	-7.4E-05	16.8098	-0.7294	145.613
2338	1	Extremo 2A	1.605	-337.124	-7.4E-05	16.8098	-0.7294	318.937
2339	0	Extremo 1A	1.605	-283.001	-5.8E-05	12.3109	-0.7295	332.377
2339	0.5	Extremo 1A	1.605	-263.95	-5.8E-05	12.3109	-0.7294	469.115
2339	1	Extremo 1A	1.605	-244.899	-5.8E-05	12.3109	-0.7294	596.327
2339	0	Extremo 2A	1.605	-282.999	-5.8E-05	12.3109	-0.7295	332.375
2339	0.5	Extremo 2A	1.605	-263.948	-5.8E-05	12.3109	-0.7294	469.112
2339	1	Extremo 2A	1.605	-244.897	-5.8E-05	12.3109	-0.7294	596.323
2340	0	Extremo 1A	1.605	-193.9	-4.6E-05	9.0383	-0.7295	607.798
2340	0.5	Extremo 1A	1.605	-174.849	-4.6E-05	9.0383	-0.7294	699.986
2340	1	Extremo 1A	1.605	-155.798	-4.6E-05	9.0383	-0.7294	782.648
2340	0	Extremo 2A	1.605	-193.898	-4.6E-05	9.0383	-0.7295	607.794
2340	0.5	Extremo 2A	1.605	-174.847	-4.6E-05	9.0383	-0.7294	699.981
2340	1	Extremo 2A	1.605	-155.796	-4.6E-05	9.0383	-0.7294	782.641
2341	0	Extremo 1A	1.605	-105.448	-3.7E-05	4.8794	-0.7295	790.35
2341	0.5	Extremo 1A	1.605	-86.397	-3.7E-05	4.8794	-0.7294	838.311
2341	1	Extremo 1A	1.605	-67.346	-3.7E-05	4.8794	-0.7294	876.747
2341	0	Extremo 2A	1.605	-105.446	-3.7E-05	4.8794	-0.7295	790.344
2341	0.5	Extremo 2A	1.605	-86.395	-3.7E-05	4.8794	-0.7294	838.304
2341	1	Extremo 2A	1.605	-67.344	-3.7E-05	4.8794	-0.7294	876.739
2342	0	Extremo 1A	1.605	-16.997	-2.9E-05	-0.0046	-0.7295	879.419
2342	0.5	Extremo 1A	1.605	2.054	-2.9E-05	-0.0046	-0.7294	883.154
2342	1	Extremo 1A	1.605	21.105	-2.9E-05	-0.0046	-0.7294	877.365
2342	0	Extremo 2A	1.605	-16.995	-2.9E-05	-0.0046	-0.7295	879.41
2342	0.5	Extremo 2A	1.605	2.056	-2.9E-05	-0.0046	-0.7294	883.145
2342	1	Extremo 2A	1.605	21.107	-2.9E-05	-0.0046	-0.7294	877.354
2343	0	Extremo 1A	1.605	71.455	-2.3E-05	-4.8844	-0.7295	874.603
2343	0.5	Extremo 1A	1.605	90.506	-2.3E-05	-4.8844	-0.7294	834.113
2343	1	Extremo 1A	1.605	109.557	-2.3E-05	-4.8844	-0.7294	784.097
2343	0	Extremo 2A	1.605	71.457	-2.3E-05	-4.8844	-0.7295	874.593
2343	0.5	Extremo 2A	1.605	90.508	-2.3E-05	-4.8844	-0.7294	834.101
2343	1	Extremo 2A	1.605	109.559	-2.3E-05	-4.8844	-0.7294	784.084
2344	0	Extremo 1A	1.605	159.909	-1.8E-05	-9.0315	-0.7295	776.313
2344	0.5	Extremo 1A	1.605	178.96	-1.8E-05	-9.0315	-0.7294	691.596
2344	1	Extremo 1A	1.605	198.011	-1.8E-05	-9.0315	-0.7294	597.353
2344	0	Extremo 2A	1.605	159.911	-1.8E-05	-9.0315	-0.7295	776.3
2344	0.5	Extremo 2A	1.605	178.962	-1.8E-05	-9.0315	-0.7294	691.582
2344	1	Extremo 2A	1.605	198.013	-1.8E-05	-9.0315	-0.7294	597.339
2345	0	Extremo 1A	1.605	249.021	-1.4E-05	-12.2918	-0.7295	585.818
2345	0.5	Extremo 1A	1.605	268.072	-1.4E-05	-12.2918	-0.7294	456.545
2345	1	Extremo 1A	1.605	287.123	-1.4E-05	-12.2918	-0.7294	317.746
2345	0	Extremo 2A	1.605	249.023	-1.4E-05	-12.2918	-0.7295	585.804
2345	0.5	Extremo 2A	1.605	268.074	-1.4E-05	-12.2918	-0.7294	456.529
2345	1	Extremo 2A	1.605	287.125	-1.4E-05	-12.2918	-0.7294	317.73
2346	0	Extremo 1A	1.605	341.295	-1.1E-05	-16.8071	-0.7295	304.272
2346	0.5	Extremo 1A	1.605	360.346	-1.1E-05	-16.8071	-0.7294	128.862
2346	1	Extremo 1A	1.605	379.396	-1.1E-05	-16.8071	-0.7294	-56.0736
2346	0	Extremo 2A	1.605	341.297	-1.1E-05	-16.8071	-0.7295	304.255
2346	0.5	Extremo 2A	1.605	360.348	-1.1E-05	-16.8071	-0.7294	128.844
2346	1	Extremo 2A	1.605	379.399	-1.1E-05	-16.8071	-0.7294	-56.0926
2347	0	Extremo 1A	1.605	440.162	-9E-06	-30.656	-0.7295	-72.0184
2347	0.5	Extremo 1A	1.605	459.213	-9E-06	-30.656	-0.7294	-296.862
2347	1	Extremo 1A	1.605	478.264	-9E-06	-30.656	-0.7294	-531.231
2347	0	Extremo 2A	1.605	440.164	-9E-06	-30.6561	-0.7295	-72.0374
2347	0.5	Extremo 2A	1.605	459.215	-9E-06	-30.6561	-0.7294	-296.882
2347	1	Extremo 2A	1.605	478.266	-9E-06	-30.6561	-0.7294	-531.253
2348	0	Extremo 1A	1.605	525.733	-7.1E-06	-67.2312	-0.7294	-562.588
2348	0.5	Extremo 1A	1.605	544.784	-7.1E-06	-67.2312	-0.7294	-830.217
2348	1	Extremo 1A	1.605	563.835	-7.1E-06	-67.2312	-0.7294	-1107.37
2348	0	Extremo 2A	1.605	525.735	-7.1E-06	-67.2316	-0.7294	-562.609
2348	0.5	Extremo 2A	1.605	544.786	-7.1E-06	-67.2316	-0.7294	-830.239
2348	1	Extremo 2A	1.605	563.837	-7.1E-06	-67.2316	-0.7294	-1107.39
2349	0	Extremo 1A	1.605	426.789	-5.6E-06	-101.025	-0.7294	-1185.18
2349	0.5	Extremo 1A	1.605	445.84	-5.6E-06	-101.025	-0.7294	-1403.34
2349	1	Extremo 1A	1.605	464.891	-5.6E-06	-101.025	-0.7294	-1631.02
2349	0	Extremo 2A	1.605	426.79	-5.6E-06	-101.026	-0.7294	-1185.21
2349	0.5	Extremo 2A	1.605	445.841	-5.6E-06	-101.026	-0.7294	-1403.37
2349	1	Extremo 2A	1.605	464.892	-5.6E-06	-101.026	-0.7294	-1631.05
2350	0	Extremo 1A	1.605	-463.368	-4.4E-06	101.007	-0.7294	-1631.05
2350	0.5	Extremo 1A	1.605	-444.317	-4.4E-06	101.007	-0.7294	-1404.12
2350	1	Extremo 1A	1.605	-425.266	-4.4E-06	101.007	-0.7294	-1186.73
2350	0	Extremo 2A	1.605	-463.375	-4.4E-06	101.008	-0.7294	-1631.07
2350	0.5	Extremo 2A	1.605	-444.324	-4.4E-06	101.008	-0.7294	-1404.15
2350	1	Extremo 2A	1.605	-425.273	-4.4E-06	101.008	-0.7294	-1186.75
2351	0	Extremo 1A	1.605	-562.311	-3.5E-06	67.2139	-0.7294	-1108.96
2351	0.5	Extremo 1A	1.605	-543.261	-3.5E-06	67.2139	-0.7294	-832.565
2351	1	Extremo 1A	1.605	-524.21	-3.5E-06	67.2139	-0.7294	-565.697
2351	0	Extremo 2A	1.605	-562.32	-3.5E-06	67.2144	-0.7294	-1108.98
2351	0.5	Extremo 2A	1.605	-543.269	-3.5E-06	67.2144	-0.7294	-832.578
2351	1	Extremo 2A	1.605	-524.218	-3.5E-06	67.2144	-0.7294	-565.707
2352	0	Extremo 1A	1.605	-476.741	-2.7E-06	30.6392	-0.7294	-534.383
2352	0.5	Extremo 1A	1.605	-457.69	-2.7E-06	30.6392	-0.7294	-300.776
2352	1	Extremo 1A	1.605	-438.639	-2.7E-06	30.6392	-0.7294	-76.6934
2352	0	Extremo 2A	1.605	-476.749	-2.7E-06	30.6393	-0.7294	-534.392
2352	0.5	Extremo 2A	1.605	-457.698	-2.7E-06	30.6393	-0.7294	-300.781
2352	1	Extremo 2A	1.605	-438.647	-2.7E-06	30.6393	-0.7294	-76.6944
2353	0	Extremo 1A	1.605	-377.873	-2.2E-06	16.7911	-0.7294	-60.7906
2353	0.5	Extremo 1A	1.605	-358.822	-2.2E-06	16.7911	-0.7294	123.383
2353	1	Extremo 1A	1.605	-339.771	-2.2E-06	16.7911	-0.7294	298.032
2353	0	Extremo 2A	1.605	-377.881	-2.2E-06	16.7911	-0.7294	-60.7914
2353	0.5	Extremo 2A	1.605	-358.83	-2.2E-06	16.7911	-0.7294	123.386
2353	1	Extremo 2A	1.605	-339.779	-2.2E-06	16.7911	-0.7294	298.039
2354	0	Extremo 1A	1.605	-285.599	-1.7E-06	12.277	-0.7294	311.465
2354	0.5	Extremo 1A	1.605	-266.548	-1.7E-06	12.277	-0.7294	449.502
2354	1	Extremo 1A	1.605	-247.498	-1.7E-06	12.277	-0.7294	578.013
2354	0	Extremo 2A	1.605	-285.607	-1.7E-06	12.277	-0.7294	311.472
2354	0.5	Extremo 2A	1.605	-266.556	-1.7E-06	12.277	-0.7294	449.513
2354	1	Extremo 2A	1.605	-247.506	-1.7E-06	12.277	-0.7294	578.029
2355	0	Extremo 1A	1.605	-196.487	-1.3E-06	9.0189	-0.7294	589.508
2355	0.5	Extremo 1A	1.605	-177.436	-1.3E-06	9.0189	-0.7294	682.989
2355	1	Extremo 1A	1.605	-158.385	-1.3E-06	9.0189	-0.7294	766.944
2355	0	Extremo 2A	1.605	-196.495	-1.3E-06	9.0189	-0.7294	589.524
2355	0.5	Extremo 2A	1.605	-177.444	-1.3E-06	9.0189	-0.7294	683.008
2355	1	Extremo 2A	1.605	-158.393	-1.3E-06	9.0189	-0.7294	766.968
2356	0	Extremo 1A	1.605	-108.033	-1.1E-06	4.8752	-0.7294	774.69
2356	0.5	Extremo 1A	1.605	-88.982	-1.1E-06	4.8752	-0.7294	823.943
2356	1	Extremo 1A	1.605	-69.931	-1.1E-06	4.8752	-0.7294	863.672
2356	0	Extremo 2A	1.605	-108.041	-1.1E-06	4.8752	-0.7294	774.713
2356	0.5	Extremo 2A	1.605	-88.99	-1.1E-06	4.8752	-0.7294	823.971
2356	1	Extremo 2A	1.605	-69.939	-1.1E-06	4.8752	-0.7294	863.703
2357	0	Extremo 1A	1.605	-19.581	-8.4E-07	0.00096	-0.7294	866.397
2357	0.5	Extremo 1A	1.605	-0.53	-8.4E-07	0.00096	-0.7294	871.425
2357	1	Extremo 1A	1.605	18.521	-8.4E-07	0.00096	-0.7294	866.928
2357	0	Extremo 2A	1.605	-19.589	-8.4E-07	0.00098	-0.7294	866.429

2357	0.5	Extremo 2A	1.605	-0.538	-8.4E-07	0.00098	-0.7294	871.461
2357	1	Extremo 2A	1.605	18.513	-8.4E-07	0.00098	-0.7294	866.967
2358	0	Extremo 1A	1.605	68.871	-6.6E-07	-4.8743	-0.7294	864.225
2358	0.5	Extremo 1A	1.605	87.922	-6.6E-07	-4.8743	-0.7294	825.027
2358	1	Extremo 1A	1.605	106.973	-6.6E-07	-4.8743	-0.7294	776.303
2358	0	Extremo 2A	1.605	68.863	-6.6E-07	-4.8743	-0.7294	864.265
2358	0.5	Extremo 2A	1.605	87.914	-6.6E-07	-4.8743	-0.7294	825.071
2358	1	Extremo 2A	1.605	106.965	-6.6E-07	-4.8743	-0.7294	776.351
2359	0	Extremo 1A	1.605	157.324	-5.2E-07	-9.0209	-0.7294	768.579
2359	0.5	Extremo 1A	1.605	176.375	-5.2E-07	-9.0209	-0.7294	685.154
2359	1	Extremo 1A	1.605	195.426	-5.2E-07	-9.0209	-0.7294	592.204
2359	0	Extremo 2A	1.605	157.316	-5.2E-07	-9.021	-0.7294	768.627
2359	0.5	Extremo 2A	1.605	176.367	-5.2E-07	-9.021	-0.7294	685.206
2359	1	Extremo 2A	1.605	195.418	-5.2E-07	-9.021	-0.7294	592.26
2360	0	Extremo 1A	1.605	246.433	-4.1E-07	-12.2821	-0.7294	580.725
2360	0.5	Extremo 1A	1.605	265.484	-4.1E-07	-12.2821	-0.7294	452.746
2360	1	Extremo 1A	1.605	284.535	-4.1E-07	-12.2821	-0.7294	315.241
2360	0	Extremo 2A	1.605	246.425	-4.1E-07	-12.2822	-0.7294	580.781
2360	0.5	Extremo 2A	1.605	265.476	-4.1E-07	-12.2822	-0.7294	452.806
2360	1	Extremo 2A	1.605	284.527	-4.1E-07	-12.2822	-0.7294	315.305
2361	0	Extremo 1A	1.605	338.695	-3.2E-07	-16.7915	-0.7294	301.817
2361	0.5	Extremo 1A	1.605	357.746	-3.2E-07	-16.7915	-0.7294	127.707
2361	1	Extremo 1A	1.605	376.797	-3.2E-07	-16.7915	-0.7294	-55.929
2361	0	Extremo 2A	1.605	338.687	-3.2E-07	-16.7915	-0.7294	301.881
2361	0.5	Extremo 2A	1.605	357.738	-3.2E-07	-16.7915	-0.7294	127.775
2361	1	Extremo 2A	1.605	376.789	-3.2E-07	-16.7915	-0.7294	-55.8568
2362	0	Extremo 1A	1.605	437.533	-2.5E-07	-30.6052	-0.7294	-71.8236
2362	0.5	Extremo 1A	1.605	456.584	-2.5E-07	-30.6052	-0.7294	-295.353
2362	1	Extremo 1A	1.605	475.635	-2.5E-07	-30.6052	-0.7294	-528.408
2362	0	Extremo 2A	1.605	437.524	-2.5E-07	-30.6048	-0.7294	-71.7515
2362	0.5	Extremo 2A	1.605	456.575	-2.5E-07	-30.6048	-0.7294	-295.276
2362	1	Extremo 2A	1.605	475.626	-2.5E-07	-30.6048	-0.7294	-528.327
2363	0	Extremo 1A	1.605	523.106	-2E-07	-67.0816	-0.7294	-559.677
2363	0.5	Extremo 1A	1.605	542.157	-2E-07	-67.0816	-0.7294	-825.993
2363	1	Extremo 1A	1.605	561.208	-2E-07	-67.0816	-0.7294	-1101.83
2363	0	Extremo 2A	1.605	523.098	-2E-07	-67.0801	-0.7294	-559.596
2363	0.5	Extremo 2A	1.605	542.149	-2E-07	-67.0801	-0.7294	-825.907
2363	1	Extremo 2A	1.605	561.2	-2E-07	-67.0801	-0.7294	-1101.74
2364	0	Extremo 1A	1.605	424.617	-1.6E-07	-100.777	-0.7294	-1179.44
2364	0.5	Extremo 1A	1.605	443.668	-1.6E-07	-100.777	-0.7294	-1396.51
2364	1	Extremo 1A	1.605	462.719	-1.6E-07	-100.777	-0.7294	-1623.11
2364	0	Extremo 2A	1.605	424.614	-1.6E-07	-100.774	-0.7294	-1179.35
2364	0.5	Extremo 2A	1.605	443.665	-1.6E-07	-100.774	-0.7294	-1396.42
2364	1	Extremo 2A	1.605	462.716	-1.6E-07	-100.774	-0.7294	-1623.01
2365	0	Extremo 1A	1.605	-463.151	-1.2E-07	100.781	-0.7294	-1623.1
2365	0.5	Extremo 1A	1.605	-444.101	-1.2E-07	100.781	-0.7294	-1396.29
2365	1	Extremo 1A	1.605	-425.05	-1.2E-07	100.781	-0.7294	-1179
2365	0	Extremo 2A	1.605	-463.126	-1.2E-07	100.778	-0.7294	-1623.01
2365	0.5	Extremo 2A	1.605	-444.075	-1.2E-07	100.778	-0.7294	-1396.21
2365	1	Extremo 2A	1.605	-425.024	-1.2E-07	100.778	-0.7294	-1178.93
2366	0	Extremo 1A	1.605	-561.64	-9.7E-08	67.0862	-0.7294	-1101.38
2366	0.5	Extremo 1A	1.605	-542.589	-9.7E-08	67.0862	-0.7294	-825.327
2366	1	Extremo 1A	1.605	-523.538	-9.7E-08	67.0862	-0.7294	-558.795
2366	0	Extremo 2A	1.605	-561.609	-9.6E-08	67.0844	-0.7294	-1101.32
2366	0.5	Extremo 2A	1.605	-542.559	-9.6E-08	67.0844	-0.7294	-825.276
2366	1	Extremo 2A	1.605	-523.508	-9.6E-08	67.0844	-0.7294	-558.759
2367	0	Extremo 1A	1.605	-476.067	-7.6E-08	30.6096	-0.7294	-527.514
2367	0.5	Extremo 1A	1.605	-457.016	-7.6E-08	30.6096	-0.7294	-294.243
2367	1	Extremo 1A	1.605	-437.965	-7.6E-08	30.6096	-0.7294	-70.4975
2367	0	Extremo 2A	1.605	-476.036	-7.5E-08	30.6091	-0.7294	-527.479
2367	0.5	Extremo 2A	1.605	-456.985	-7.5E-08	30.6091	-0.7294	-294.224
2367	1	Extremo 2A	1.605	-437.934	-7.5E-08	30.6091	-0.7294	-70.4937
2368	0	Extremo 1A	1.605	-377.229	-5.9E-08	16.7957	-0.7294	-54.5912
2368	0.5	Extremo 1A	1.605	-358.178	-5.9E-08	16.7957	-0.7294	129.261
2368	1	Extremo 1A	1.605	-339.127	-5.9E-08	16.7957	-0.7294	303.587
2368	0	Extremo 2A	1.605	-377.199	-5.8E-08	16.7956	-0.7294	-54.5879
2368	0.5	Extremo 2A	1.605	-358.148	-5.8E-08	16.7956	-0.7294	129.249
2368	1	Extremo 2A	1.605	-339.097	-5.8E-08	16.7956	-0.7294	303.56
2369	0	Extremo 1A	1.605	-284.968	-4.7E-08	12.2859	-0.7294	317.022
2369	0.5	Extremo 1A	1.605	-265.917	-4.7E-08	12.2859	-0.7294	454.743
2369	1	Extremo 1A	1.605	-246.866	-4.7E-08	12.2859	-0.7294	582.939
2369	0	Extremo 2A	1.605	-284.937	-4.5E-08	12.2859	-0.7294	316.995
2369	0.5	Extremo 2A	1.605	-265.886	-4.5E-08	12.2859	-0.7294	454.701
2369	1	Extremo 2A	1.605	-246.835	-4.5E-08	12.2859	-0.7294	582.881
2370	0	Extremo 1A	1.605	-195.858	-3.6E-08	9.0242	-0.7294	594.429
2370	0.5	Extremo 1A	1.605	-176.807	-3.6E-08	9.0242	-0.7294	687.595
2370	1	Extremo 1A	1.605	-157.756	-3.6E-08	9.0242	-0.7294	771.236
2370	0	Extremo 2A	1.605	-195.828	-3.5E-08	9.0241	-0.7294	594.37
2370	0.5	Extremo 2A	1.605	-176.777	-3.5E-08	9.0241	-0.7294	687.521
2370	1	Extremo 2A	1.605	-157.726	-3.5E-08	9.0241	-0.7294	771.147
2371	0	Extremo 1A	1.605	-107.405	-2.8E-08	4.8766	-0.7294	778.971
2371	0.5	Extremo 1A	1.605	-88.354	-2.8E-08	4.8766	-0.7294	827.911
2371	1	Extremo 1A	1.605	-69.303	-2.8E-08	4.8766	-0.7294	867.326
2371	0	Extremo 2A	1.605	-107.375	-2.6E-08	4.8765	-0.7294	778.882
2371	0.5	Extremo 2A	1.605	-88.324	-2.6E-08	4.8765	-0.7294	827.806
2371	1	Extremo 2A	1.605	-69.273	-2.6E-08	4.8765	-0.7294	867.206
2372	0	Extremo 1A	1.605	-18.953	-2.2E-08	-0.00017	-0.7294	870.038
2372	0.5	Extremo 1A	1.605	0.098	-2.2E-08	-0.00017	-0.7294	874.752
2372	1	Extremo 1A	1.605	19.149	-2.2E-08	-0.00017	-0.7294	869.94
2372	0	Extremo 2A	1.605	-18.923	-1.9E-08	-0.00022	-0.7294	869.918
2372	0.5	Extremo 2A	1.605	0.128	-1.9E-08	-0.00022	-0.7294	874.616
2372	1	Extremo 2A	1.605	19.179	-1.9E-08	-0.00022	-0.7294	869.79
2373	0	Extremo 1A	1.605	69.499	-1.7E-08	-4.8768	-0.7294	867.224
2373	0.5	Extremo 1A	1.605	88.55	-1.7E-08	-4.8768	-0.7294	827.711
2373	1	Extremo 1A	1.605	107.601	-1.7E-08	-4.8768	-0.7294	778.674
2373	0	Extremo 2A	1.605	69.529	-1.4E-08	-4.8767	-0.7294	867.072
2373	0.5	Extremo 2A	1.605	88.58	-1.4E-08	-4.8767	-0.7294	827.545
2373	1	Extremo 2A	1.605	107.631	-1.4E-08	-4.8767	-0.7294	778.492
2374	0	Extremo 1A	1.605	157.952	-1.3E-08	-9.0238	-0.7294	770.935
2374	0.5	Extremo 1A	1.605	177.003	-1.3E-08	-9.0238	-0.7294	687.196
2374	1	Extremo 1A	1.605	196.054	-1.3E-08	-9.0238	-0.7294	593.932
2374	0	Extremo 2A	1.605	157.982	-8.6E-09	-9.0236	-0.7294	770.753
2374	0.5	Extremo 2A	1.605	177.033	-8.6E-09	-9.0236	-0.7294	686.999
2374	1	Extremo 2A	1.605	196.084	-8.6E-09	-9.0236	-0.7294	593.719
2375	0	Extremo 1A	1.605	247.062	-9.8E-09	-12.285	-0.7294	582.439
2375	0.5	Extremo 1A	1.605	266.113	-9.8E-09	-12.285	-0.7294	454.145
2375	1	Extremo 1A	1.605	285.164	-9.8E-09	-12.285	-0.7294	316.326
2375	0	Extremo 2A	1.605	247.092	-4.1E-09	-12.2846	-0.7294	582.226
2375	0.5	Extremo 2A	1.605	266.143	-4.1E-09	-12.2846	-0.7294	453.918
2375	1	Extremo 2A	1.605	285.194	-4.1E-09	-12.2846	-0.7294	316.083
2376	0	Extremo 1A	1.605	339.326	-7.2E-09	-16.7957	-0.7294	302.889
2376	0.5	Extremo 1A	1.605	358.377	-7.2E-09	-16.7957	-0.7294	128.464
2376	1	Extremo 1A	1.605	377.428	-7.2E-09	-16.7957	-0.7294	-55.4874
2376	0	Extremo 2A	1.605	339.357	5.5E-12	-16.7955	-0.7294	302.646
2376	0.5	Extremo 2A	1.605	358.408	5.5E-12	-16.7955	-0.7294	128.205
2376	1	Extremo 2A	1.605	377.459	5.5E-12	-16.7955	-0.7294	-55.7614
2377	0	Extremo 1A	1.605	438.169	-5.1E-09	-30.6159	-0.7294	-71.3952
2377	0.5	Extremo 1A	1.605	457.22	-5.1E-09	-30.6159	-0.7294	-295.243
2377	1	Extremo 1A	1.605	476.271	-5.1E-09	-30.6159	-0.7294	-528.615
2377	0	Extremo 2A	1.605	438.201	4.1E-09	-30.6173	-0.7294	-71.6692
2377	0.5	Extremo 2A	1.605	457.252	4.1E-09	-30.6173	-0.7294	-295.533
2377	1	Extremo 2A	1.605	476.303	4.1E-09	-30.6173	-0.7294	-528.921
2378	0	Extremo 1A	1.605	523.742	-3.2E-09	-67.1106	-0.7294	-559.905
2378	0.5	Extremo 1A	1.605	542.793	-3.2E-09	-67.1106	-0.7294	-826.538
2378	1	Extremo 1A	1.605	561.844	-3.2E-09	-67.1106	-0.7294	-1102.7
2378	0	Extremo 2A	1.605	523.774	8.4E-09	-67.1164	-0.7294	-560.212
2378	0.5	Extremo 2A	1.605	542.825	8.4E-09	-67.1164	-0.7294	-826.862
2378	1	Extremo 2A	1.605	561.876	8.4E-09	-67.1164	-0.7294	-1103.04
2379	0	Extremo 1A	1.605	425.169	-1.7E-09	-100.824	-0.7294	-1180.35
2379	0.5	Extremo 1A	1.605	444.22	-1.7E-09	-100.824	-0.7294	-1397.69
2379	1	Extremo 1A	1.605	463.271	-1.7E-09	-100.824	-0.7294	-1624.57
2379	0	Extremo 2A	1.605	425.181	1.3E-08	-100.834	-0.7294	-1180.69
2379	0.5	Extremo 2A	1.605	444.232	1.3E-08	-100.834	-0.7294	-1398.05
2379	1	Extremo 2A	1.605	463.283	1.3E-08	-100.834	-0.7294	-1624.92
2380	0	Extremo 1A	1.605	-463.04	-2E-10	100.821	-0.7294	-1624.57
2380	0.5	Extremo 1A	1.605	-443.989	-2E-10	100.821	-0.7294	-1397.81
2380	1	Extremo 1A	1.605	-424.938	-2E-10	100.821	-0.7294	-1180.58
2380	0	Extremo 2A	1.605	-463.136	1.9E-08	100.833	-0.7294	-1624.93
2380	0.5	Extremo 2A	1.605	-444.085	1.9E-08	100.833	-0.7294	-1398.12
2380	1	Extremo 2A	1.605	-425.034	1.9E-08	100.833	-0.7294	-1180.84
2381	0	Extremo 1A	1.605	-561.613	1.2E-09	67.1082	-0.7294	-1102.94
2381	0.5	Extremo 1A	1.605	-542.562	1.2E-09	67.1082	-0.7294	-826.894
2381	1	Extremo 1A	1.605	-523.511	1.2E-09	67.1082	-0.7294	-560.376
2381	0	Extremo 2A	1.605	-561.729	2.5E-08	67.1149	-0.7294	-1103.19

2381	0.5	Extremo 2A	1.605	-542.678	2.5E-08	67.1149	-0.7294	-827.088
2381	1	Extremo 2A	1.605	-523.627	2.5E-08	67.1149	-0.7294	-560.511
2382	0	Extremo 1A	1.605	-476.04	2.7E-09	30.6136	-0.7294	-529.093
2382	0.5	Extremo 1A	1.605	-456.989	2.7E-09	30.6136	-0.7294	-295.836
2382	1	Extremo 1A	1.605	-437.938	2.7E-09	30.6136	-0.7294	-72.1039
2382	0	Extremo 2A	1.605	-476.157	3.3E-08	30.6158	-0.7294	-529.224
2382	0.5	Extremo 2A	1.605	-457.106	3.3E-08	30.6158	-0.7294	-295.909
2382	1	Extremo 2A	1.605	-438.055	3.3E-08	30.6158	-0.7294	-72.1185
2383	0	Extremo 1A	1.605	-377.197	4.2E-09	16.7934	-0.7294	-56.2023
2383	0.5	Extremo 1A	1.605	-358.146	4.2E-09	16.7934	-0.7294	127.633
2383	1	Extremo 1A	1.605	-339.095	4.2E-09	16.7934	-0.7294	301.943
2383	0	Extremo 2A	1.605	-377.312	4.3E-08	16.7941	-0.7294	-56.2147
2383	0.5	Extremo 2A	1.605	-358.261	4.3E-08	16.7941	-0.7294	127.679
2383	1	Extremo 2A	1.605	-339.21	4.3E-08	16.7941	-0.7294	302.046
2384	0	Extremo 1A	1.605	-284.933	6E-09	12.283	-0.7294	315.374
2384	0.5	Extremo 1A	1.605	-265.882	6E-09	12.283	-0.7294	453.078
2384	1	Extremo 1A	1.605	-246.831	6E-09	12.283	-0.7294	581.256
2384	0	Extremo 2A	1.605	-285.048	5.5E-08	12.2834	-0.7294	315.48
2384	0.5	Extremo 2A	1.605	-265.997	5.5E-08	12.2834	-0.7294	453.241
2384	1	Extremo 2A	1.605	-246.946	5.5E-08	12.2834	-0.7294	581.476
2385	0	Extremo 1A	1.605	-195.823	8.1E-09	9.0221	-0.7294	592.743
2385	0.5	Extremo 1A	1.605	-176.772	8.1E-09	9.0221	-0.7294	685.891
2385	1	Extremo 1A	1.605	-157.721	8.1E-09	9.0221	-0.7294	769.515
2385	0	Extremo 2A	1.605	-195.938	7E-08	9.0225	-0.7294	592.965
2385	0.5	Extremo 2A	1.605	-176.887	7E-08	9.0225	-0.7294	686.172
2385	1	Extremo 2A	1.605	-157.836	7E-08	9.0225	-0.7294	769.852
2386	0	Extremo 1A	1.605	-107.369	1.1E-08	4.8755	-0.7294	777.248
2386	0.5	Extremo 1A	1.605	-88.319	1.1E-08	4.8755	-0.7294	826.17
2386	1	Extremo 1A	1.605	-69.268	1.1E-08	4.8755	-0.7294	865.566
2386	0	Extremo 2A	1.605	-107.484	9E-08	4.876	-0.7294	777.588
2386	0.5	Extremo 2A	1.605	-88.433	9E-08	4.876	-0.7294	826.568
2386	1	Extremo 2A	1.605	-69.382	9E-08	4.876	-0.7294	866.021
2387	0	Extremo 1A	1.605	-18.918	1.4E-08	-0.00024	-0.7294	868.278
2387	0.5	Extremo 1A	1.605	0.133	1.4E-08	-0.00024	-0.7294	872.974
2387	1	Extremo 1A	1.605	19.184	1.4E-08	-0.00024	-0.7294	868.145
2387	0	Extremo 2A	1.605	-19.032	1.1E-07	-2.8E-06	-0.7294	868.736
2387	0.5	Extremo 2A	1.605	0.019	1.1E-07	-2.8E-06	-0.7294	873.489
2387	1	Extremo 2A	1.605	19.07	1.1E-07	-2.8E-06	-0.7294	868.717
2388	0	Extremo 1A	1.605	69.534	1.7E-08	-4.8757	-0.7294	865.427
2388	0.5	Extremo 1A	1.605	88.585	1.7E-08	-4.8757	-0.7294	825.897
2388	1	Extremo 1A	1.605	107.636	1.7E-08	-4.8757	-0.7294	776.842
2388	0	Extremo 2A	1.605	69.42	1.4E-07	-4.8759	-0.7294	866.002
2388	0.5	Extremo 2A	1.605	88.471	1.4E-07	-4.8759	-0.7294	826.53
2388	1	Extremo 2A	1.605	107.521	1.4E-07	-4.8759	-0.7294	777.532
2389	0	Extremo 1A	1.605	157.988	2.2E-08	-9.0216	-0.7294	769.103
2389	0.5	Extremo 1A	1.605	177.039	2.2E-08	-9.0216	-0.7294	685.347
2389	1	Extremo 1A	1.605	196.09	2.2E-08	-9.0216	-0.7294	592.065
2389	0	Extremo 2A	1.605	157.873	1.8E-07	-9.0224	-0.7294	769.795
2389	0.5	Extremo 2A	1.605	176.924	1.8E-07	-9.0224	-0.7294	686.096
2389	1	Extremo 2A	1.605	195.975	1.8E-07	-9.0224	-0.7294	592.871
2390	0	Extremo 1A	1.605	247.099	2.8E-08	-12.2817	-0.7294	580.574
2390	0.5	Extremo 1A	1.605	266.15	2.8E-08	-12.2817	-0.7294	452.262
2390	1	Extremo 1A	1.605	285.2	2.8E-08	-12.2817	-0.7294	314.424
2390	0	Extremo 2A	1.605	246.983	2.3E-07	-12.2832	-0.7294	581.381
2390	0.5	Extremo 2A	1.605	266.034	2.3E-07	-12.2832	-0.7294	453.127
2390	1	Extremo 2A	1.605	285.085	2.3E-07	-12.2832	-0.7294	315.347
2391	0	Extremo 1A	1.605	339.365	3.6E-08	-16.7933	-0.7294	300.991
2391	0.5	Extremo 1A	1.605	358.416	3.6E-08	-16.7933	-0.7294	126.545
2391	1	Extremo 1A	1.605	377.467	3.6E-08	-16.7933	-0.7294	-57.4255
2391	0	Extremo 2A	1.605	339.248	3E-07	-16.7941	-0.7294	301.914
2391	0.5	Extremo 2A	1.605	358.299	3E-07	-16.7941	-0.7294	127.527
2391	1	Extremo 2A	1.605	377.35	3E-07	-16.7941	-0.7294	-56.3853
2392	0	Extremo 1A	1.605	438.216	4.6E-08	-30.6221	-0.7294	-73.3292
2392	0.5	Extremo 1A	1.605	457.267	4.6E-08	-30.6221	-0.7294	-297.2
2392	1	Extremo 1A	1.605	476.318	4.6E-08	-30.6221	-0.7294	-530.596
2392	0	Extremo 2A	1.605	438.094	3.8E-07	-30.6171	-0.7294	-72.2894
2392	0.5	Extremo 2A	1.605	457.145	3.8E-07	-30.6171	-0.7294	-296.099
2392	1	Extremo 2A	1.605	476.196	3.8E-07	-30.6171	-0.7294	-529.434
2393	0	Extremo 1A	1.605	523.788	5.8E-08	-67.1415	-0.7294	-561.891
2393	0.5	Extremo 1A	1.605	542.839	5.8E-08	-67.1415	-0.7294	-828.548
2393	1	Extremo 1A	1.605	561.89	5.8E-08	-67.1415	-0.7294	-1104.73
2393	0	Extremo 2A	1.605	523.666	4.8E-07	-67.1198	-0.7294	-560.723
2393	0.5	Extremo 2A	1.605	542.717	4.8E-07	-67.1198	-0.7294	-827.319
2393	1	Extremo 2A	1.605	561.768	4.8E-07	-67.1198	-0.7294	-1103.44
2394	0	Extremo 1A	1.605	425.102	7.3E-08	-100.88	-0.7294	-1182.41
2394	0.5	Extremo 1A	1.605	444.152	7.3E-08	-100.88	-0.7294	-1399.73
2394	1	Extremo 1A	1.605	463.203	7.3E-08	-100.88	-0.7294	-1626.57
2394	0	Extremo 2A	1.605	425.057	6E-07	-100.841	-0.7294	-1181.1
2394	0.5	Extremo 2A	1.605	444.108	6E-07	-100.841	-0.7294	-1398.39
2394	1	Extremo 2A	1.605	463.159	6E-07	-100.841	-0.7294	-1625.21
2395	0	Extremo 1A	1.605	-463.709	9.3E-08	100.885	-0.7294	-1626.56
2395	0.5	Extremo 1A	1.605	-444.658	9.3E-08	100.885	-0.7294	-1399.47
2395	1	Extremo 1A	1.605	-425.607	9.3E-08	100.885	-0.7294	-1181.9
2395	0	Extremo 2A	1.605	-463.344	7.7E-07	100.842	-0.7294	-1625.2
2395	0.5	Extremo 2A	1.605	-444.293	7.7E-07	100.842	-0.7294	-1398.29
2395	1	Extremo 2A	1.605	-425.243	7.7E-07	100.842	-0.7294	-1180.91
2396	0	Extremo 1A	1.605	-562.396	1.2E-07	67.147	-0.7294	-1104.2
2396	0.5	Extremo 1A	1.605	-543.345	1.2E-07	67.147	-0.7294	-827.769
2396	1	Extremo 1A	1.605	-524.294	1.2E-07	67.147	-0.7294	-560.859
2396	0	Extremo 2A	1.605	-561.953	9.7E-07	67.1209	-0.7294	-1103.25
2396	0.5	Extremo 2A	1.605	-542.903	9.7E-07	67.1209	-0.7294	-827.034
2396	1	Extremo 2A	1.605	-523.852	9.7E-07	67.1209	-0.7294	-560.345
2397	0	Extremo 1A	1.605	-476.824	1.5E-07	30.6275	-0.7294	-529.551
2397	0.5	Extremo 1A	1.605	-457.773	1.5E-07	30.6275	-0.7294	-295.902
2397	1	Extremo 1A	1.605	-438.722	1.5E-07	30.6275	-0.7294	-71.7778
2397	0	Extremo 2A	1.605	-476.381	1.2E-06	30.6182	-0.7294	-529.052
2397	0.5	Extremo 2A	1.605	-457.33	1.2E-06	30.6182	-0.7294	-295.625
2397	1	Extremo 2A	1.605	-438.279	1.2E-06	30.6182	-0.7294	-71.7224
2398	0	Extremo 1A	1.605	-377.973	1.9E-07	16.7984	-0.7294	-55.8604
2398	0.5	Extremo 1A	1.605	-358.922	1.9E-07	16.7984	-0.7294	128.363
2398	1	Extremo 1A	1.605	-339.871	1.9E-07	16.7984	-0.7294	303.062
2398	0	Extremo 2A	1.605	-377.535	1.6E-06	16.795	-0.7294	-55.8139
2398	0.5	Extremo 2A	1.605	-358.484	1.6E-06	16.795	-0.7294	128.191
2398	1	Extremo 2A	1.605	-339.433	1.6E-06	16.795	-0.7294	302.67
2399	0	Extremo 1A	1.605	-285.706	2.4E-07	12.2864	-0.7294	316.508
2399	0.5	Extremo 1A	1.605	-266.655	2.4E-07	12.2864	-0.7294	454.599
2399	1	Extremo 1A	1.605	-247.604	2.4E-07	12.2864	-0.7294	583.164
2399	0	Extremo 2A	1.605	-285.27	2E-06	12.284	-0.7294	316.108
2399	0.5	Extremo 2A	1.605	-266.219	2E-06	12.284	-0.7294	453.981
2399	1	Extremo 2A	1.605	-247.169	2E-06	12.284	-0.7294	582.328
2400	0	Extremo 1A	1.605	-196.596	3.1E-07	9.0256	-0.7294	594.668
2400	0.5	Extremo 1A	1.605	-177.545	3.1E-07	9.0256	-0.7294	688.203
2400	1	Extremo 1A	1.605	-158.494	3.1E-07	9.0256	-0.7294	772.212
2400	0	Extremo 2A	1.605	-196.16	2.5E-06	9.023	-0.7294	593.822
2400	0.5	Extremo 2A	1.605	-177.109	2.5E-06	9.023	-0.7294	687.139
2400	1	Extremo 2A	1.605	-158.058	2.5E-06	9.023	-0.7294	770.931
2401	0	Extremo 1A	1.605	-108.142	3.9E-07	4.8786	-0.7294	779.963
2401	0.5	Extremo 1A	1.605	-89.091	3.9E-07	4.8786	-0.7294	829.272
2401	1	Extremo 1A	1.605	-70.04	3.9E-07	4.8786	-0.7294	869.055
2401	0	Extremo 2A	1.605	-107.707	3.2E-06	4.8762	-0.7294	778.672
2401	0.5	Extremo 2A	1.605	-88.656	3.2E-06	4.8762	-0.7294	827.762
2401	1	Extremo 2A	1.605	-69.605	3.2E-06	4.8762	-0.7294	867.328
2402	0	Extremo 1A	1.605	-19.69	4.9E-07	0.0013	-0.7294	871.784
2402	0.5	Extremo 1A	1.605	-0.639	4.9E-07	0.0013	-0.7294	876.866
2402	1	Extremo 1A	1.605	18.412	4.9E-07	0.0013	-0.7294	872.423
2402	0	Extremo 2A	1.605	-19.255	4E-06	-0.00034	-0.7294	870.046
2402	0.5	Extremo 2A	1.605	-0.204	4E-06	-0.00034	-0.7294	874.911
2402	1	Extremo 2A	1.605	18.847	4E-06	-0.00034	-0.7294	870.25
2403	0	Extremo 1A	1.605	68.762	6.2E-07	-4.8774	-0.7294	869.722
2403	0.5	Extremo 1A	1.605	87.813	6.2E-07	-4.8774	-0.7294	830.578
2403	1	Extremo 1A	1.605	106.863	6.2E-07	-4.8774	-0.7294	781.909
2403	0	Extremo 2A	1.605	69.197	5.1E-06	-4.8772	-0.7294	867.54
2403	0.5	Extremo 2A	1.605	88.248	5.1E-06	-4.8772	-0.7294	828.178
2403	1	Extremo 2A	1.605	107.299	5.1E-06	-4.8772	-0.7294	779.292
2404	0	Extremo 1A	1.605	157.214	7.9E-07	-9.0279	-0.7294	774.183
2404	0.5	Extremo 1A	1.605	176.265	7.9E-07	-9.0279	-0.7294	690.813
2404	1	Extremo 1A	1.605	195.316	7.9E-07	-9.0279	-0.7294	597.918
2404	0	Extremo 2A	1.605	157.65	6.4E-06	-9.0248	-0.7294	771.558
2404	0.5	Extremo 2A	1.605	176.701	6.4E-06	-9.0248	-0.7294	687.971
2404	1	Extremo 2A	1.605	195.752	6.4E-06	-9.0248	-0.7294	594.858
2405	0	Extremo 1A	1.605	246.321	1E-06	-12.2924	-0.7294	586.433
2405	0.5	Extremo 1A	1.605	265.372	1E-06	-12.2924	-0.7294	458.51
2405	1	Extremo 1A	1.605	284.423	1E-06	-12.2924	-0.7294	321.061
2405	0	Extremo 2A	1.605	246.758	8.1E-06	-12.2863	-0.7294	583.369

2405	0.5	Extremo 2A	1.605	265.809	8.1E-06	-12.2863	-0.7294	455.227
2405	1	Extremo 2A	1.605	284.86	8.1E-06	-12.2863	-0.7295	317.56
2406	0	Extremo 1A	1.605	338.574	1.3E-06	-16.799	-0.7294	307.626
2406	0.5	Extremo 1A	1.605	357.624	1.3E-06	-16.799	-0.7294	133.576
2406	1	Extremo 1A	1.605	376.675	1.3E-06	-16.799	-0.7294	-49.9989
2406	0	Extremo 2A	1.605	339.018	1E-05	-16.7944	-0.7294	304.125
2406	0.5	Extremo 2A	1.605	358.069	1E-05	-16.7944	-0.7294	129.854
2406	1	Extremo 2A	1.605	377.12	1E-05	-16.7944	-0.7295	-53.9437
2407	0	Extremo 1A	1.605	437.389	1.6E-06	-30.587	-0.7294	-65.9066
2407	0.5	Extremo 1A	1.605	456.44	1.6E-06	-30.587	-0.7294	-289.364
2407	1	Extremo 1A	1.605	475.491	1.6E-06	-30.587	-0.7294	-522.346
2407	0	Extremo 2A	1.605	437.852	1.3E-05	-30.6022	-0.7294	-69.8483
2407	0.5	Extremo 2A	1.605	456.903	1.3E-05	-30.6022	-0.7294	-293.537
2407	1	Extremo 2A	1.605	475.954	1.3E-05	-30.6022	-0.7295	-526.751
2408	0	Extremo 1A	1.605	522.964	2E-06	-66.9884	-0.7294	-553.601
2408	0.5	Extremo 1A	1.605	542.015	2E-06	-66.9884	-0.7294	-819.845
2408	1	Extremo 1A	1.605	561.066	2E-06	-66.9884	-0.7294	-1095.62
2408	0	Extremo 2A	1.605	523.425	1.6E-05	-67.064	-0.7294	-558.024
2408	0.5	Extremo 2A	1.605	542.476	1.6E-05	-67.064	-0.7294	-824.499
2408	1	Extremo 2A	1.605	561.527	1.6E-05	-67.064	-0.7295	-1100.5
2409	0	Extremo 1A	1.605	424.825	2.6E-06	-100.608	-0.7294	-1173.12
2409	0.5	Extremo 1A	1.605	443.876	2.6E-06	-100.608	-0.7294	-1390.29
2409	1	Extremo 1A	1.605	462.926	2.6E-06	-100.608	-0.7294	-1616.99
2409	0	Extremo 2A	1.605	424.993	2E-05	-100.743	-0.7294	-1178.09
2409	0.5	Extremo 2A	1.605	444.044	2E-05	-100.743	-0.7294	-1395.35
2409	1	Extremo 2A	1.605	463.095	2E-05	-100.743	-0.7295	-1622.14
2410	0	Extremo 1A	1.605	-461.108	3.3E-06	100.584	-0.7294	-1617.02
2410	0.5	Extremo 1A	1.605	-442.057	3.3E-06	100.584	-0.7294	-1391.23
2410	1	Extremo 1A	1.605	-423.006	3.3E-06	100.584	-0.7294	-1174.96
2410	0	Extremo 2A	1.605	-462.477	2.6E-05	100.758	-0.7294	-1622.14
2410	0.5	Extremo 2A	1.605	-443.426	2.6E-05	100.758	-0.7294	-1395.66
2410	1	Extremo 2A	1.605	-424.375	2.6E-05	100.758	-0.7295	-1178.71
2411	0	Extremo 1A	1.605	-559.247	4.1E-06	66.9646	-0.7294	-1097.51
2411	0.5	Extremo 1A	1.605	-540.196	4.1E-06	66.9646	-0.7294	-822.653
2411	1	Extremo 1A	1.605	-521.145	4.1E-06	66.9646	-0.7294	-557.318
2411	0	Extremo 2A	1.605	-560.909	3.2E-05	67.0785	-0.7294	-1101.12
2411	0.5	Extremo 2A	1.605	-541.858	3.2E-05	67.0785	-0.7294	-825.43
2411	1	Extremo 2A	1.605	-522.807	3.2E-05	67.0785	-0.7295	-559.263
2412	0	Extremo 1A	1.605	-473.672	5.2E-06	30.5636	-0.7294	-526.116
2412	0.5	Extremo 1A	1.605	-454.621	5.2E-06	30.5636	-0.7294	-294.043
2412	1	Extremo 1A	1.605	-435.57	5.2E-06	30.5636	-0.7294	-71.4951
2412	0	Extremo 2A	1.605	-475.336	4.1E-05	30.6169	-0.7294	-527.992
2412	0.5	Extremo 2A	1.605	-456.285	4.1E-05	30.6169	-0.7294	-295.087
2412	1	Extremo 2A	1.605	-437.234	4.1E-05	30.6169	-0.7295	-71.7075
2413	0	Extremo 1A	1.605	-374.856	6.6E-06	16.7767	-0.7294	-55.6397
2413	0.5	Extremo 1A	1.605	-355.805	6.6E-06	16.7767	-0.7294	127.026
2413	1	Extremo 1A	1.605	-336.755	6.6E-06	16.7767	-0.7294	300.166
2413	0	Extremo 2A	1.605	-376.502	5.1E-05	16.8091	-0.7294	-55.8051
2413	0.5	Extremo 2A	1.605	-357.451	5.1E-05	16.8091	-0.7294	127.683
2413	1	Extremo 2A	1.605	-338.4	5.1E-05	16.8091	-0.7295	301.646
2414	0	Extremo 1A	1.605	-282.604	8.4E-06	12.2716	-0.7294	313.55
2414	0.5	Extremo 1A	1.605	-263.553	8.4E-06	12.2716	-0.7294	450.089
2414	1	Extremo 1A	1.605	-244.502	8.4E-06	12.2716	-0.7295	577.103
2414	0	Extremo 2A	1.605	-284.242	6.4E-05	12.3011	-0.7294	315.078
2414	0.5	Extremo 2A	1.605	-265.191	6.4E-05	12.3011	-0.7294	452.437
2414	1	Extremo 2A	1.605	-246.14	6.4E-05	12.3011	-0.7295	580.269
2415	0	Extremo 1A	1.605	-193.497	1.1E-05	9.0097	-0.7294	588.537
2415	0.5	Extremo 1A	1.605	-174.446	1.1E-05	9.0097	-0.7294	680.523
2415	1	Extremo 1A	1.605	-155.395	1.1E-05	9.0097	-0.7295	762.983
2415	0	Extremo 2A	1.605	-195.133	8.1E-05	9.0398	-0.7294	591.756
2415	0.5	Extremo 2A	1.605	-176.082	8.1E-05	9.0398	-0.7294	684.56
2415	1	Extremo 2A	1.605	-157.031	8.1E-05	9.0398	-0.7295	767.838
2416	0	Extremo 1A	1.605	-105.044	1.3E-05	4.8635	-0.7294	770.661
2416	0.5	Extremo 1A	1.605	-85.993	1.3E-05	4.8635	-0.7294	818.42
2416	1	Extremo 1A	1.605	-66.942	1.3E-05	4.8635	-0.7295	856.653
2416	0	Extremo 2A	1.605	-106.679	0.0001	4.8922	-0.7294	775.57
2416	0.5	Extremo 2A	1.605	-87.628	0.0001	4.8922	-0.7295	824.147
2416	1	Extremo 2A	1.605	-68.578	0.0001	4.8922	-0.7295	863.198
2417	0	Extremo 1A	1.605	-16.592	1.7E-05	-0.0081	-0.7294	859.31
2417	0.5	Extremo 1A	1.605	2.459	1.7E-05	-0.0081	-0.7294	862.843
2417	1	Extremo 1A	1.605	21.51	1.7E-05	-0.0081	-0.7295	856.851
2417	0	Extremo 2A	1.605	-18.227	0.00013	0.0151	-0.7294	865.908
2417	0.5	Extremo 2A	1.605	0.824	0.00013	0.0151	-0.7295	870.258
2417	1	Extremo 2A	1.605	19.875	0.00013	0.0151	-0.7295	865.084
2418	0	Extremo 1A	1.605	71.86	2.1E-05	-4.8743	-0.7294	854.083
2418	0.5	Extremo 1A	1.605	90.911	2.1E-05	-4.8743	-0.7294	813.391
2418	1	Extremo 1A	1.605	109.962	2.1E-05	-4.8743	-0.7295	763.172
2418	0	Extremo 2A	1.605	70.227	0.00016	-4.8625	-0.7294	862.364
2418	0.5	Extremo 2A	1.605	89.278	0.00016	-4.8625	-0.7295	822.487
2418	1	Extremo 2A	1.605	108.329	0.00016	-4.8625	-0.7295	773.086
2419	0	Extremo 1A	1.605	160.315	2.7E-05	-9.0053	-0.7294	755.393
2419	0.5	Extremo 1A	1.605	179.366	2.7E-05	-9.0053	-0.7294	670.473
2419	1	Extremo 1A	1.605	198.417	2.7E-05	-9.0053	-0.7295	576.028
2419	0	Extremo 2A	1.604	158.684	0.0002	-9.013	-0.7294	765.344
2419	0.5	Extremo 2A	1.604	177.735	0.0002	-9.013	-0.7295	681.239
2419	1	Extremo 2A	1.604	196.786	0.0002	-9.013	-0.7296	587.609
2420	0	Extremo 1A	1.605	249.435	3.4E-05	-12.25	-0.7294	564.515
2420	0.5	Extremo 1A	1.605	268.486	3.4E-05	-12.25	-0.7294	435.035
2420	1	Extremo 1A	1.605	287.537	3.4E-05	-12.25	-0.7295	296.029
2420	0	Extremo 2A	1.604	247.804	0.00025	-12.2848	-0.7293	576.113
2420	0.5	Extremo 2A	1.604	266.854	0.00025	-12.2848	-0.7295	447.449
2420	1	Extremo 2A	1.604	285.905	0.00025	-12.2848	-0.7296	309.259
2421	0	Extremo 1A	1.605	341.742	4.2E-05	-16.7705	-0.7294	282.601
2421	0.5	Extremo 1A	1.605	360.793	4.2E-05	-16.7705	-0.7294	106.967
2421	1	Extremo 1A	1.605	379.844	4.2E-05	-16.7705	-0.7295	-78.1921
2421	0	Extremo 2A	1.604	340.092	0.0003	-16.8274	-0.7293	295.816
2421	0.5	Extremo 2A	1.604	359.143	0.0003	-16.8274	-0.7295	121.007
2421	1	Extremo 2A	1.604	378.194	0.0003	-16.8274	-0.7296	-63.3273
2422	0	Extremo 1A	1.605	440.691	5.3E-05	-30.7068	-0.7294	-94.0816
2422	0.5	Extremo 1A	1.605	459.742	5.3E-05	-30.7068	-0.7294	-319.19
2422	1	Extremo 1A	1.605	478.793	5.3E-05	-30.7068	-0.7295	-553.824
2422	0	Extremo 2A	1.604	438.987	0.00038	-30.7356	-0.7293	-79.2605
2422	0.5	Extremo 2A	1.604	458.038	0.00038	-30.7356	-0.7295	-303.517
2422	1	Extremo 2A	1.604	477.089	0.00038	-30.7356	-0.7296	-537.298
2423	0	Extremo 1A	1.605	526.252	6.7E-05	-67.5478	-0.7294	-585.221
2423	0.5	Extremo 1A	1.605	545.303	6.7E-05	-67.5478	-0.7294	-853.109
2423	1	Extremo 1A	1.605	564.354	6.7E-05	-67.5478	-0.7295	-1130.52
2423	0	Extremo 2A	1.603	524.568	0.00047	-67.4232	-0.7292	-568.698
2423	0.5	Extremo 2A	1.603	543.619	0.00047	-67.4232	-0.7295	-835.744
2423	1	Extremo 2A	1.603	562.67	0.00047	-67.4232	-0.7297	-1112.32
2424	0	Extremo 1A	1.605	426.016	8.4E-05	-101.606	-0.7294	-1208.71
2424	0.5	Extremo 1A	1.605	445.067	8.4E-05	-101.606	-0.7294	-1426.48
2424	1	Extremo 1A	1.605	464.118	8.4E-05	-101.606	-0.7295	-1653.77
2424	0	Extremo 2A	1.603	425.382	0.00058	-101.344	-0.7292	-1190.29
2424	0.5	Extremo 2A	1.603	444.433	0.00058	-101.344	-0.7295	-1407.74
2424	1	Extremo 2A	1.603	463.484	0.00058	-101.344	-0.7297	-1634.72
2425	0	Extremo 1A	1.605	-470.931	0.0001	101.793	-0.7294	-1653.64
2425	0.5	Extremo 1A	1.605	-451.88	0.0001	101.793	-0.7295	-1422.94
2425	1	Extremo 1A	1.605	-432.829	0.0001	101.793	-0.7295	-1201.76
2425	0	Extremo 2A	1.602	-466.091	0.00071	100.873	-0.7291	-1634.86
2425	0.5	Extremo 2A	1.602	-447.04	0.00071	100.873	-0.7295	-1406.58
2425	1	Extremo 2A	1.602	-427.989	0.00071	100.873	-0.7298	-1187.82
2426	0	Extremo 1A	1.605	-571.168	0.00013	67.734	-0.7294	-1123.31
2426	0.5	Extremo 1A	1.605	-552.117	0.00013	67.734	-0.7295	-842.491
2426	1	Extremo 1A	1.605	-533.066	0.00013	67.734	-0.7295	-571.195
2426	0	Extremo 2A	1.601	-565.277	0.00087	66.952	-0.729	-1110.12
2426	0.5	Extremo 2A	1.601	-546.226	0.00087	66.952	-0.7295	-832.248
2426	1	Extremo 2A	1.601	-527.175	0.00087	66.952	-0.7299	-563.898
2427	0	Extremo 1A	1.605	-485.607	0.00016	30.8906	-0.7294	-539.534
2427	0.5	Extremo 1A	1.605	-466.556	0.00016	30.8906	-0.7295	-301.493
2427	1	Extremo 1A	1.605	-447.505	0.00016	30.8906	-0.7295	-72.9776
2427	0	Extremo 2A	1.6	-479.697	0.00106	30.266	-0.7289	-532.774
2427	0.5	Extremo 2A	1.6	-460.646	0.00106	30.266	-0.7294	-297.688
2427	1	Extremo 2A	1.6	-441.595	0.00106	30.266	-0.73	-72.1278
2428	0	Extremo 1A	1.604	-386.658	0.0002	16.9499	-0.7294	-56.8254
2428	0.5	Extremo 1A	1.604	-367.607	0.0002	16.9499	-0.7295	131.741
2428	1	Extremo 1A	1.604	-348.556	0.0002	16.9499	-0.7296	310.781
2428	0	Extremo 2A	1.599	-380.804	0.00129	16.3612	-0.7288	-56.4688
2428	0.5	Extremo 2A	1.599	-361.753	0.00129	16.3612	-0.7294	129.17
2428	1	Extremo 2A	1.599	-342.702	0.00129	16.3612	-0.7301	305.284
2429	0	Extremo 1A	1.604	-294.351	0.00026	12.4217	-0.7293	324.469
2429	0.5	Extremo 1A	1.604	-275.3	0.00026	12.4217	-0.7295	466.882
2429	1	Extremo 1A	1.604	-256.249	0.00026	12.4217	-0.7296	599.769
2429	0	Extremo 2A	1.597	-288.518	0.00157	11.8254	-0.7286	318.455

2429	0.5	Extremo 2A	1.597	-269.467	0.00157	11.8254	-0.7294	457.951
2429	1	Extremo 2A	1.597	-250.416	0.00157	11.8254	-0.7302	587.922
2430	0	Extremo 1A	1.604	-205.23	0.00032	9.1638	-0.7293	611.536
2430	0.5	Extremo 1A	1.604	-186.179	0.00032	9.1638	-0.7295	709.388
2430	1	Extremo 1A	1.604	-167.128	0.00032	9.1638	-0.7296	797.715
2430	0	Extremo 2A	1.595	-199.405	0.00188	8.5669	-0.7285	599.15
2430	0.5	Extremo 2A	1.595	-180.354	0.00188	8.5669	-0.7294	694.09
2430	1	Extremo 2A	1.595	-161.303	0.00188	8.5669	-0.7303	779.504
2431	0	Extremo 1A	1.604	-116.774	0.00039	5.0104	-0.7293	805.738
2431	0.5	Extremo 1A	1.604	-97.723	0.00039	5.0104	-0.7295	859.362
2431	1	Extremo 1A	1.604	-78.672	0.00039	5.0104	-0.7297	903.461
2431	0	Extremo 2A	1.591	-110.959	0.00224	4.442	-0.7282	786.987
2431	0.5	Extremo 2A	1.591	-91.908	0.00224	4.442	-0.7294	837.704
2431	1	Extremo 2A	1.591	-72.857	0.00224	4.442	-0.7305	878.895
2432	0	Extremo 1A	1.603	-28.319	0.00049	0.1065	-0.7292	906.455
2432	0.5	Extremo 1A	1.603	-9.268	0.00049	0.1065	-0.7295	915.852
2432	1	Extremo 1A	1.603	9.783	0.00049	0.1065	-0.7297	915.723
2432	0	Extremo 2A	1.587	-22.527	0.00265	-0.3867	-0.728	881.374
2432	0.5	Extremo 2A	1.587	-3.476	0.00265	-0.3867	-0.7293	887.875
2432	1	Extremo 2A	1.587	15.575	0.00265	-0.3867	-0.7306	884.85
2433	0	Extremo 1A	1.603	60.141	0.0006	-4.8279	-0.7292	913.262
2433	0.5	Extremo 1A	1.603	79.192	0.0006	-4.8279	-0.7295	878.428
2433	1	Extremo 1A	1.603	98.243	0.0006	-4.8279	-0.7298	834.07
2433	0	Extremo 2A	1.582	65.885	0.0031	-5.1705	-0.7277	881.933
2433	0.5	Extremo 2A	1.582	84.936	0.0031	-5.1705	-0.7292	844.227
2433	1	Extremo 2A	1.582	103.987	0.0031	-5.1705	-0.7308	796.996
2434	0	Extremo 1A	1.602	148.603	0.00074	-9.0722	-0.7291	826.531
2434	0.5	Extremo 1A	1.602	167.654	0.00074	-9.0722	-0.7295	747.467
2434	1	Extremo 1A	1.602	186.705	0.00074	-9.0722	-0.7298	658.877
2434	0	Extremo 2A	1.575	154.262	0.00358	-9.1408	-0.7273	789.12
2434	0.5	Extremo 2A	1.575	173.313	0.00358	-9.1408	-0.7291	707.227
2434	1	Extremo 2A	1.575	192.364	0.00358	-9.1408	-0.7309	615.807
2435	0	Extremo 1A	1.601	237.7	0.00091	-12.4638	-0.729	647.482
2435	0.5	Extremo 1A	1.601	256.751	0.00091	-12.4638	-0.7295	523.869
2435	1	Extremo 1A	1.601	275.802	0.00091	-12.4638	-0.7299	390.731
2435	0	Extremo 2A	1.566	243.223	0.00405	-12.0637	-0.7269	604.299
2435	0.5	Extremo 2A	1.566	262.274	0.00405	-12.0637	-0.7289	477.925
2435	1	Extremo 2A	1.566	281.325	0.00405	-12.0637	-0.7309	342.025
2436	0	Extremo 1A	1.6	329.847	0.00111	-17.0599	-0.7289	377.231
2436	0.5	Extremo 1A	1.6	348.898	0.00111	-17.0599	-0.7295	207.545
2436	1	Extremo 1A	1.6	367.949	0.00111	-17.0599	-0.73	28.3332
2436	0	Extremo 2A	1.554	335.195	0.00447	-15.9217	-0.7264	328.811
2436	0.5	Extremo 2A	1.554	354.246	0.00447	-15.9217	-0.7287	156.451
2436	1	Extremo 2A	1.554	373.297	0.00447	-15.9217	-0.7309	-25.4348
2437	0	Extremo 1A	1.599	428.358	0.00136	-30.653	-0.7288	12.2268
2437	0.5	Extremo 1A	1.599	447.409	0.00136	-30.653	-0.7294	-206.715
2437	1	Extremo 1A	1.599	466.46	0.00136	-30.653	-0.7301	-435.182
2437	0	Extremo 2A	1.539	433.542	0.00476	-28.4947	-0.7259	-40.6182
2437	0.5	Extremo 2A	1.539	452.592	0.00476	-28.4947	-0.7283	-262.152
2437	1	Extremo 2A	1.539	471.643	0.00476	-28.4947	-0.7307	-493.211
2438	0	Extremo 1A	1.597	514.026	0.00164	-66.1726	-0.7286	-466.378
2438	0.5	Extremo 1A	1.597	533.076	0.00164	-66.1726	-0.7294	-728.153
2438	1	Extremo 1A	1.597	552.127	0.00164	-66.1726	-0.7302	-999.454
2438	0	Extremo 2A	1.519	518.863	0.00479	-62.814	-0.7254	-522.662
2438	0.5	Extremo 2A	1.519	537.914	0.00479	-62.814	-0.7278	-786.856
2438	1	Extremo 2A	1.519	556.964	0.00479	-62.814	-0.7302	-1060.58
2439	0	Extremo 1A	1.594	421.48	0.00198	-98.9836	-0.7284	-1075.7
2439	0.5	Extremo 1A	1.594	440.531	0.00198	-98.9836	-0.7294	-1291.21
2439	1	Extremo 1A	1.594	459.582	0.00198	-98.9836	-0.7304	-1516.23
2439	0	Extremo 2A	1.494	423.761	0.00438	-94.008	-0.7248	-1134.27
2439	0.5	Extremo 2A	1.494	442.812	0.00438	-94.008	-0.727	-1350.91
2439	1	Extremo 2A	1.494	461.863	0.00438	-94.008	-0.7292	-1577.08
2440	0	Extremo 1A	1.591	-435.272	0.00237	95.9933	-0.7282	-1517.51
2440	0.5	Extremo 1A	1.591	-416.221	0.00237	95.9933	-0.7294	-1304.64
2440	1	Extremo 1A	1.591	-397.17	0.00237	95.9933	-0.7306	-1101.29
2440	0	Extremo 2A	1.462	-445.219	0.00322	105.62	-0.7244	-1573.21
2440	0.5	Extremo 2A	1.462	-426.168	0.00322	105.62	-0.726	-1355.36
2440	1	Extremo 2A	1.462	-407.117	0.00322	105.62	-0.7276	-1147.04
2441	0	Extremo 1A	1.587	-527.819	0.00281	63.191	-0.7279	-1027.6
2441	0.5	Extremo 1A	1.587	-508.768	0.00281	63.191	-0.7293	-768.458
2441	1	Extremo 1A	1.587	-489.717	0.00281	63.191	-0.7307	-518.837
2441	0	Extremo 2A	1.421	-540.316	0.00087	74.3912	-0.724	-1065.62
2441	0.5	Extremo 2A	1.421	-521.265	0.00087	74.3912	-0.7245	-800.221
2441	1	Extremo 2A	1.421	-502.214	0.00087	74.3912	-0.7249	-544.351
2442	0	Extremo 1A	1.581	-442.154	0.0033	27.6917	-0.7276	-490.193
2442	0.5	Extremo 1A	1.581	-423.103	0.0033	27.6917	-0.7292	-273.879
2442	1	Extremo 1A	1.581	-404.052	0.0033	27.6917	-0.7309	-67.0905
2442	0	Extremo 2A	1.37	-454.984	-0.00332	39.9924	-0.7241	-507.197
2442	0.5	Extremo 2A	1.37	-435.933	-0.00332	39.9924	-0.7224	-284.468
2442	1	Extremo 2A	1.37	-416.882	-0.00332	39.9924	-0.7207	-71.2638
2443	0	Extremo 1A	1.574	-343.648	0.00383	14.1375	-0.7272	-53.5213
2443	0.5	Extremo 1A	1.574	-324.597	0.00383	14.1375	-0.7291	113.54
2443	1	Extremo 1A	1.574	-305.546	0.00383	14.1375	-0.731	271.076
2443	0	Extremo 2A	1.306	-356.615	-0.01	27.2711	-0.7247	-48.4379
2443	0.5	Extremo 2A	1.306	-337.564	-0.01	27.2711	-0.7195	125.107
2443	1	Extremo 2A	1.306	-318.513	-0.01	27.2711	-0.7143	289.126
2444	0	Extremo 1A	1.565	-251.514	0.00436	9.6123	-0.7267	282.066
2444	0.5	Extremo 1A	1.565	-232.463	0.00436	9.6123	-0.7289	403.06
2444	1	Extremo 1A	1.565	-213.412	0.00436	9.6123	-0.7311	514.529
2444	0	Extremo 2A	1.228	-264.598	-0.022	23.1516	-0.7262	309.873
2444	0.5	Extremo 2A	1.228	-245.547	-0.022	23.1516	-0.7155	437.409
2444	1	Extremo 2A	1.228	-226.497	-0.022	23.1516	-0.7047	555.42
2445	0	Extremo 1A	1.553	-162.444	0.00486	6.348	-0.7262	523.465
2445	0.5	Extremo 1A	1.553	-143.393	0.00486	6.348	-0.7287	599.924
2445	1	Extremo 1A	1.553	-124.342	0.00486	6.348	-0.7311	666.858
2445	0	Extremo 2A	1.133	-175.552	-0.039	19.7793	-0.7294	574.266
2445	0.5	Extremo 2A	1.133	-156.501	-0.039	19.7793	-0.7099	657.279
2445	1	Extremo 2A	1.133	-137.45	-0.039	19.7793	-0.6903	730.767
2446	0	Extremo 1A	1.537	-74.037	0.00524	2.3324	-0.7257	672.029
2446	0.5	Extremo 1A	1.537	-54.986	0.00524	2.3324	-0.7283	704.285
2446	1	Extremo 1A	1.537	-35.935	0.00524	2.3324	-0.7309	727.015
2446	0	Extremo 2A	1.023	-87.019	-0.066	15.0498	-0.7353	745.64
2446	0.5	Extremo 2A	1.023	-67.968	-0.066	15.0498	-0.7023	784.387
2446	1	Extremo 2A	1.023	-48.917	-0.066	15.0498	-0.6692	813.608
2447	0	Extremo 1A	1.517	14.312	0.00539	-2.1914	-0.7251	727.276
2447	0.5	Extremo 1A	1.517	33.363	0.00539	-2.1914	-0.7278	715.357
2447	1	Extremo 1A	1.517	52.414	0.00539	-2.1914	-0.7305	693.912
2447	0	Extremo 2A	0.898	1.667	-0.107	9.0087	-0.7455	822.939
2447	0.5	Extremo 2A	0.898	20.718	-0.107	9.0087	-0.692	817.342
2447	1	Extremo 2A	0.898	39.769	-0.107	9.0087	-0.6385	802.221
2448	0	Extremo 1A	1.492	102.558	0.00512	-6.3651	-0.7245	689.028
2448	0.5	Extremo 1A	1.492	121.609	0.00512	-6.3651	-0.727	632.986
2448	1	Extremo 1A	1.492	140.66	0.00512	-6.3651	-0.7296	567.419
2448	0	Extremo 2A	0.767	90.552	-0.169	2.1533	-0.7626	805.17
2448	0.5	Extremo 2A	0.767	109.602	-0.169	2.1533	-0.6783	755.131
2448	1	Extremo 2A	0.767	128.653	-0.169	2.1533	-0.5939	695.567
2449	0	Extremo 1A	1.459	190.647	0.00414	-9.2495	-0.7239	558.085
2449	0.5	Extremo 1A	1.459	209.698	0.00414	-9.2495	-0.726	457.998
2449	1	Extremo 1A	1.459	228.749	0.00414	-9.2495	-0.7281	348.387
2449	0	Extremo 2A	0.642	179.705	-0.262	-5.1236	-0.7906	691.894
2449	0.5	Extremo 2A	0.642	198.756	-0.262	-5.1236	-0.6597	597.279
2449	1	Extremo 2A	0.642	217.807	-0.262	-5.1236	-0.5288	493.138
2450	0	Extremo 1A	1.417	279.225	0.00202	-10.4159	-0.7235	336.372
2450	0.5	Extremo 1A	1.417	298.276	0.00202	-10.4159	-0.7245	191.997
2450	1	Extremo 1A	1.417	317.327	0.00202	-10.4159	-0.7255	38.0959
2450	0	Extremo 2A	0.551	269.856	-0.401	-13.056	-0.8326	483.168
2450	0.5	Extremo 2A	0.551	288.907	-0.401	-13.056	-0.6322	343.477
2450	1	Extremo 2A	0.551	307.957	-0.401	-13.056	-0.4318	194.261
2451	0	Extremo 1A	1.365	370.981	-0.0019	-11.8405	-0.7234	26.0082
2451	0.5	Extremo 1A	1.365	390.032	-0.0019	-11.8405	-0.7224	-164.245
2451	1	Extremo 1A	1.365	409.083	-0.0019	-11.8405	-0.7215	-364.024
2451	0	Extremo 2A	0.531	363.55	-0.598	-24.1016	-0.8831	178.528
2451	0.5	Extremo 2A	0.531	382.601	-0.598	-24.1016	-0.5842	-8.0094
2451	1	Extremo 2A	0.531	401.652	-0.598	-24.1016	-0.2854	-204.073
2452	0	Extremo 1A	1.3	469.733	-0.00856	-22.0075	-0.7238	-375.798
2452	0.5	Extremo 1A	1.3	488.784	-0.00856	-22.0075	-0.7195	-615.427
2452	1	Extremo 1A	1.3	507.835	-0.00856	-22.0075	-0.7152	-864.582
2452	0	Extremo 2A	0.618	464.071	-0.823	-46.3571	-0.9072	-227.638
2452	0.5	Extremo 2A	0.618	483.122	-0.823	-46.3571	-0.4954	-464.436
2452	1	Extremo 2A	0.618	502.173	-0.823	-46.3571	-0.0837	-710.76
2453	0	Extremo 1A	1.219	553.792	-0.019	-55.4847	-0.7252	-888.962
2453	0.5	Extremo 1A	1.219	572.843	-0.019	-55.4847	-0.7155	-1170.62
2453	1	Extremo 1A	1.219	591.894	-0.019	-55.4847	-0.7058	-1461.81
2453	0	Extremo 2A	0.802	549.56	-0.935	-92.4181	-0.8324	-756.796

2453	0.5	Extremo 2A	0.802	568.611	-0.935	-92.4181	-0.3647	-1036.34
2453	1	Extremo 2A	0.802	587.662	-0.935	-92.4181	0.1029	-1325.41
2454	0	Extremo 1A	1.122	434.806	-0.036	-84.5799	-0.7281	-1531.59
2454	0.5	Extremo 1A	1.122	453.857	-0.036	-84.5799	-0.7099	-1753.75
2454	1	Extremo 1A	1.122	472.908	-0.036	-84.5799	-0.6917	-1985.44
2454	0	Extremo 2A	0.985	434.775	-0.823	-132.091	-0.6457	-1425.99
2454	0.5	Extremo 2A	0.985	453.826	-0.823	-132.091	-0.234	-1648.14
2454	1	Extremo 2A	0.985	472.877	-0.823	-132.091	0.1776	-1879.82
2455	0	Extremo 1A	1.008	-555.838	-0.063	146.36	-0.7337	-1962.85
2455	0.5	Extremo 1A	1.008	-536.787	-0.063	146.36	-0.7023	-1689.69
2455	1	Extremo 1A	1.008	-517.736	-0.063	146.36	-0.6708	-1426.06
2455	0	Extremo 2A	1.073	-540.097	-0.597	89.2046	-0.444	-1896
2455	0.5	Extremo 2A	1.073	-521.046	-0.597	89.2046	-0.1452	-1630.71
2455	1	Extremo 2A	1.073	-501.995	-0.597	89.2046	0.1535	-1374.95
2456	0	Extremo 1A	0.879	-674.472	-0.103	115.965	-0.7435	-1311.46
2456	0.5	Extremo 1A	0.879	-655.421	-0.103	115.965	-0.6919	-978.985
2456	1	Extremo 1A	0.879	-636.37	-0.103	115.965	-0.6404	-656.037
2456	0	Extremo 2A	1.052	-654.73	-0.4	57.0817	-0.2974	-1303.2
2456	0.5	Extremo 2A	1.052	-635.679	-0.4	57.0817	-0.0973	-980.593
2456	1	Extremo 2A	1.052	-616.628	-0.4	57.0817	0.1028	-667.516
2457	0	Extremo 1A	0.742	-589.616	-0.164	79.5669	-0.7602	-588.07
2457	0.5	Extremo 1A	0.742	-570.565	-0.164	79.5669	-0.6782	-298.025
2457	1	Extremo 1A	0.742	-551.514	-0.164	79.5669	-0.5961	-17.5049
2457	0	Extremo 2A	0.96	-569.845	-0.261	22.7687	-0.2003	-641.646
2457	0.5	Extremo 2A	0.96	-550.794	-0.261	22.7687	-0.0698	-361.486
2457	1	Extremo 2A	0.96	-531.743	-0.261	22.7687	0.0608	-90.852
2458	0	Extremo 1A	0.61	-489.448	-0.256	64.2065	-0.7876	35.4096
2458	0.5	Extremo 1A	0.61	-470.397	-0.256	64.2065	-0.6595	275.371
2458	1	Extremo 1A	0.61	-451.346	-0.256	64.2065	-0.5314	505.807
2458	0	Extremo 2A	0.835	-471.103	-0.168	12.3843	-0.1352	-77.5823
2458	0.5	Extremo 2A	0.835	-452.052	-0.168	12.3843	-0.0512	153.206
2458	1	Extremo 2A	0.835	-433.001	-0.168	12.3843	0.0327	374.47
2459	0	Extremo 1A	0.51	-395.478	-0.394	54.3846	-0.8289	554.742
2459	0.5	Extremo 1A	0.51	-376.427	-0.394	54.3846	-0.6319	747.718
2459	1	Extremo 1A	0.51	-357.376	-0.394	54.3846	-0.4349	931.169
2459	0	Extremo 2A	0.703	-379.492	-0.106	10.8944	-0.0904	388.075
2459	0.5	Extremo 2A	0.703	-360.441	-0.106	10.8944	-0.0375	573.058
2459	1	Extremo 2A	0.703	-341.39	-0.106	10.8944	0.0154	748.516
2460	0	Extremo 1A	0.477	-303.919	-0.59	40.6879	-0.8787	973.006
2460	0.5	Extremo 1A	0.477	-284.868	-0.59	40.6879	-0.5837	1120.2
2460	1	Extremo 1A	0.477	-265.817	-0.59	40.6879	-0.2888	1257.87
2460	0	Extremo 2A	0.577	-291.018	-0.065	9.7119	-0.0595	762.044
2460	0.5	Extremo 2A	0.577	-271.967	-0.065	9.7119	-0.0272	902.79
2460	1	Extremo 2A	0.577	-252.916	-0.065	9.7119	0.0051	1034.01
2461	0	Extremo 1A	0.548	-212.588	-0.814	20.949	-0.9018	1286.46
2461	0.5	Extremo 1A	0.548	-193.537	-0.814	20.949	-0.4947	1387.99
2461	1	Extremo 1A	0.548	-174.486	-0.814	20.949	-0.0875	1480
2461	0	Extremo 2A	0.465	-202.949	-0.037	6.8642	-0.0383	1044.86
2461	0.5	Extremo 2A	0.465	-183.898	-0.037	6.8642	-0.0196	1141.57
2461	1	Extremo 2A	0.465	-164.847	-0.037	6.8642	-0.00093	1228.76
2462	0	Extremo 1A	0.711	-121.514	-0.925	-2.8508	-0.826	1490.17
2462	0.5	Extremo 1A	0.711	-102.463	-0.925	-2.8508	-0.3636	1546.16
2462	1	Extremo 1A	0.711	-83.412	-0.925	-2.8508	0.0989	1592.63
2462	0	Extremo 2A	0.368	-114.615	-0.019	2.7915	-0.0237	1235.21
2462	0.5	Extremo 2A	0.368	-95.564	-0.019	2.7915	-0.014	1287.75
2462	1	Extremo 2A	0.368	-76.514	-0.019	2.7915	-0.0043	1330.77
2463	0	Extremo 1A	0.867	-30.294	-0.812	-26.5373	-0.6382	1582.4
2463	0.5	Extremo 1A	0.867	-11.243	-0.812	-26.5373	-0.2324	1592.78
2463	1	Extremo 1A	0.867	7.808	-0.812	-26.5373	0.1734	1593.64
2463	0	Extremo 2A	0.288	-25.977	-0.00762	-1.6157	-0.0138	1332.19
2463	0.5	Extremo 2A	0.288	-6.926	-0.00762	-1.6157	-0.01	1340.41
2463	1	Extremo 2A	0.288	12.125	-0.00762	-1.6157	-0.0062	1339.11
2464	0	Extremo 1A	0.92	61.651	-0.585	-46.0602	-0.4353	1565.16
2464	0.5	Extremo 1A	0.92	80.702	-0.585	-46.0602	-0.143	1529.57
2464	1	Extremo 1A	0.92	99.753	-0.585	-46.0602	0.1493	1484.46
2464	0	Extremo 2A	0.22	63.206	-6E-06	-5.745	-0.0071	1335.77
2464	0.5	Extremo 2A	0.22	82.257	-6E-06	-5.745	-0.0071	1299.4
2464	1	Extremo 2A	0.22	101.308	-6E-06	-5.745	-0.0071	1253.51
2465	0	Extremo 1A	0.855	154.729	-0.387	-59.906	-0.2881	1442.74
2465	0.5	Extremo 1A	0.855	173.779	-0.387	-59.906	-0.0945	1360.62
2465	1	Extremo 1A	0.855	192.83	-0.387	-59.906	0.099	1268.97
2465	0	Extremo 2A	0.165	154.06	0.00489	-10.0721	-0.0026	1246.24
2465	0.5	Extremo 2A	0.165	173.111	0.00489	-10.0721	-0.0051	1164.45
2465	1	Extremo 2A	0.165	192.161	0.00489	-10.0721	-0.0075	1073.13
2466	0	Extremo 1A	0.708	250.238	-0.25	-70.805	-0.1925	1218.84
2466	0.5	Extremo 1A	0.708	269.289	-0.25	-70.805	-0.0673	1088.96
2466	1	Extremo 1A	0.708	288.34	-0.25	-70.805	0.0578	949.551
2466	0	Extremo 2A	0.118	248.245	0.00792	-17.7717	0.00018	1062
2466	0.5	Extremo 2A	0.118	267.296	0.00792	-17.7717	-0.0038	933.115
2466	1	Extremo 2A	0.118	286.347	0.00792	-17.7717	-0.0077	794.704
2467	0	Extremo 1A	0.516	340.336	-0.168	-84.8692	-0.1337	890.172
2467	0.5	Extremo 1A	0.516	359.387	-0.168	-84.8692	-0.0499	715.241
2467	1	Extremo 1A	0.516	378.438	-0.168	-84.8692	0.034	530.785
2467	0	Extremo 2A	0.079	337.272	0.00924	-34.6166	0.0014	774.421
2467	0.5	Extremo 2A	0.079	356.323	0.00924	-34.6166	-0.0032	601.022
2467	1	Extremo 2A	0.079	375.374	0.00924	-34.6166	-0.0078	418.098
2468	0	Extremo 1A	0.31	351.563	-0.137	-92.4551	-0.1021	452.356
2468	0.5	Extremo 1A	0.31	370.614	-0.137	-92.4551	-0.0334	271.812
2468	1	Extremo 1A	0.31	389.665	-0.137	-92.4551	0.0352	81.7423
2468	0	Extremo 2A	0.045	345.667	0.00782	-50.1208	0.00081	375.128
2468	0.5	Extremo 2A	0.045	364.718	0.00782	-50.1208	-0.0031	197.531
2468	1	Extremo 2A	0.045	383.769	0.00782	-50.1208	-0.007	10.4093
2469	0	Extremo 1A	0.124	17.206	-0.143	4.8221	-0.0748	39.5524
2469	0.5	Extremo 1A	0.124	36.257	-0.143	4.8221	-0.003	26.1866
2469	1	Extremo 1A	0.124	55.308	-0.143	4.8221	0.0687	3.2954
2469	0	Extremo 2A	0.018	3.964	0.00217	34.9026	-0.0011	-1.0439
2469	0.5	Extremo 2A	0.018	23.015	0.00217	34.9026	-0.0022	-7.7888
2469	1	Extremo 2A	0.018	42.066	0.00217	34.9026	-0.0033	-24.0592
2470	0	Extremo 1A	-1.347	51.349	-0.941	8.9933	-0.155	-43.9455
2470	0.5	Extremo 1A	-1.347	59.534	-0.941	8.9933	0.3157	-71.6663
2470	1	Extremo 1A	-1.347	67.718	-0.941	8.9933	0.7863	-103.479
2470	0	Extremo 2A	-1.347	51.349	-0.941	8.9933	-0.155	-43.9455
2470	0.5	Extremo 2A	-1.347	59.534	-0.941	8.9933	0.3157	-71.6663
2470	1	Extremo 2A	-1.347	67.718	-0.941	8.9933	0.7863	-103.479
2472	0	Extremo 1A	5.819	-69.499	-5.321	-11.2143	-3.3185	-106.726
2472	0.5	Extremo 1A	5.819	-61.314	-5.321	-11.2143	-0.6578	-74.0231
2472	1	Extremo 1A	5.819	-53.13	-5.321	-11.2143	2.0029	-45.4121
2472	0	Extremo 2A	5.819	-69.499	-5.321	-11.2143	-3.3185	-106.726
2472	0.5	Extremo 2A	5.819	-61.314	-5.321	-11.2143	-0.6578	-74.0231
2472	1	Extremo 2A	5.819	-53.13	-5.321	-11.2143	2.0029	-45.4121
2473	0	Extremo 1A	-0.014	62.971	-1.196	5.5778	-0.3337	-42.977
2473	0.5	Extremo 1A	-0.014	71.156	-1.196	5.5778	0.2642	-76.5088
2473	1	Extremo 1A	-0.014	79.34	-1.196	5.5778	0.8621	-114.133
2473	0	Extremo 2A	-0.014	62.971	-1.196	5.5778	-0.3337	-42.977
2473	0.5	Extremo 2A	-0.014	71.156	-1.196	5.5778	0.2642	-76.5088
2473	1	Extremo 2A	-0.014	79.34	-1.196	5.5778	0.8621	-114.133
2475	0	Extremo 1A	0.637	-81.621	-6.317	-8.0225	-3.1778	-116.749
2475	0.5	Extremo 1A	0.637	-73.437	-6.317	-8.0225	-0.0193	-77.9848
2475	1	Extremo 1A	0.637	-65.253	-6.317	-8.0225	3.1392	-43.3124
2475	0	Extremo 2A	0.637	-81.621	-6.317	-8.0225	-3.1778	-116.749
2475	0.5	Extremo 2A	0.637	-73.437	-6.317	-8.0225	-0.0193	-77.9848
2475	1	Extremo 2A	0.637	-65.253	-6.317	-8.0225	3.1392	-43.3124
2476	0	Extremo 1A	0.269	64.405	-1.087	1.2404	-0.3241	-48.0462
2476	0.5	Extremo 1A	0.269	72.589	-1.087	1.2404	0.2196	-82.2949
2476	1	Extremo 1A	0.269	80.774	-1.087	1.2404	0.7633	-120.636
2476	0	Extremo 2A	0.269	64.405	-1.087	1.2404	-0.3241	-48.0462
2476	0.5	Extremo 2A	0.269	72.589	-1.087	1.2404	0.2196	-82.2949
2476	1	Extremo 2A	0.269	80.774	-1.087	1.2404	0.7633	-120.636
2478	0	Extremo 1A	-0.705	-81.251	-6.429	-3.5428	-3.7577	-121.297
2478	0.5	Extremo 1A	-0.705	-73.066	-6.429	-3.5428	-0.543	-82.7174
2478	1	Extremo 1A	-0.705	-64.882	-6.429	-3.5428	2.6718	-48.2304
2478	0	Extremo 2A	-0.705	-81.251	-6.429	-3.5428	-3.7577	-121.297
2478	0.5	Extremo 2A	-0.705	-73.066	-6.429	-3.5428	-0.543	-82.7174
2478	1	Extremo 2A	-0.705	-64.882	-6.429	-3.5428	2.6718	-48.2304
2479	0	Extremo 1A	0.243	61.835	-0.877	0.2837	-0.2541	-50.0636
2479	0.5	Extremo 1A	0.243	70.02	-0.877	0.2837	0.1842	-83.0274
2479	1	Extremo 1A	0.243	78.204	-0.877	0.2837	0.6225	-120.083
2479	0	Extremo 2A	0.243	61.835	-0.877	0.2837	-0.2541	-50.0636
2479	0.5	Extremo 2A	0.243	70.02	-0.877	0.2837	0.1842	-83.0274
2479	1	Extremo 2A	0.243	78.204	-0.877	0.2837	0.6225	-120.083
2481	0	Extremo 1A	-1.102	-76.822	-5.376	-2.6887	-3.3685	-118.201
2481	0.5	Extremo 1A	-1.102	-68.637	-5.376	-2.6887	-0.6803	-81.8365
2481	1	Extremo 1A	-1.102	-60.453	-5.376	-2.6887	2.0078	-49.564
2481	0	Extremo 2A	-1.102	-76.822	-5.376	-2.6887	-3.3685	-118.201

2481	0.5	Extremo 2A	-1.102	-68.637	-5.376	-2.6887	-0.6803	-81.8365
2481	1	Extremo 2A	-1.102	-60.453	-5.376	-2.6887	2.0078	-49.564
2482	0	Extremo 1A	0.185	60.441	-0.686	-0.6658	-0.188	-50.294
2482	0.5	Extremo 1A	0.185	68.625	-0.686	-0.6658	0.1553	-82.5605
2482	1	Extremo 1A	0.185	76.81	-0.686	-0.6658	0.4985	-118.919
2482	0	Extremo 2A	0.185	60.441	-0.686	-0.6658	-0.188	-50.294
2482	0.5	Extremo 2A	0.185	68.625	-0.686	-0.6658	0.1553	-82.5605
2482	1	Extremo 2A	0.185	76.81	-0.686	-0.6658	0.4985	-118.919
2484	0	Extremo 1A	-1.034	-74.817	-4.133	-0.9072	-2.6975	-115.835
2484	0.5	Extremo 1A	-1.034	-66.633	-4.133	-0.9072	-0.6312	-80.4729
2484	1	Extremo 1A	-1.034	-58.448	-4.133	-0.9072	1.4352	-49.2028
2484	0	Extremo 2A	-1.034	-74.817	-4.133	-0.9072	-2.6975	-115.835
2484	0.5	Extremo 2A	-1.034	-66.633	-4.133	-0.9072	-0.6312	-80.4729
2484	1	Extremo 2A	-1.034	-58.448	-4.133	-0.9072	1.4352	-49.2028
2485	0	Extremo 1A	0.145	60.044	-0.534	-2.0502	-0.1372	-50.4213
2485	0.5	Extremo 1A	0.145	68.229	-0.534	-2.0502	0.1298	-82.4896
2485	1	Extremo 1A	0.145	76.413	-0.534	-2.0502	0.3968	-118.65
2485	0	Extremo 2A	0.145	60.044	-0.534	-2.0502	-0.1372	-50.4213
2485	0.5	Extremo 2A	0.145	68.229	-0.534	-2.0502	0.1298	-82.4896
2485	1	Extremo 2A	0.145	76.413	-0.534	-2.0502	0.3968	-118.65
2487	0	Extremo 1A	-0.851	-74.305	-3.077	1.8348	-2.0652	-115.257
2487	0.5	Extremo 1A	-0.851	-66.121	-3.077	1.8348	-0.5268	-80.1506
2487	1	Extremo 1A	-0.851	-57.936	-3.077	1.8348	1.0116	-49.1365
2487	0	Extremo 2A	-0.851	-74.305	-3.077	1.8348	-2.0652	-115.257
2487	0.5	Extremo 2A	-0.851	-66.121	-3.077	1.8348	-0.5268	-80.1506
2487	1	Extremo 2A	-0.851	-57.936	-3.077	1.8348	1.0116	-49.1365
2488	0	Extremo 1A	0.117	60.31	-0.412	-3.2852	-0.099	-51.117
2488	0.5	Extremo 1A	0.117	68.494	-0.412	-3.2852	0.1068	-83.318
2488	1	Extremo 1A	0.117	76.679	-0.412	-3.2852	0.3127	-119.611
2488	0	Extremo 2A	0.117	60.31	-0.412	-3.2852	-0.099	-51.117
2488	0.5	Extremo 2A	0.117	68.494	-0.412	-3.2852	0.1068	-83.318
2488	1	Extremo 2A	0.117	76.679	-0.412	-3.2852	0.3127	-119.611
2490	0	Extremo 1A	-0.668	-74.587	-2.267	4.4427	-1.5519	-116.448
2490	0.5	Extremo 1A	-0.668	-66.403	-2.267	4.4427	-0.4182	-81.2003
2490	1	Extremo 1A	-0.668	-58.219	-2.267	4.4427	0.7156	-50.0448
2490	0	Extremo 2A	-0.668	-74.587	-2.267	4.4427	-1.5519	-116.448
2490	0.5	Extremo 2A	-0.668	-66.403	-2.267	4.4427	-0.4182	-81.2003
2490	1	Extremo 2A	-0.668	-58.219	-2.267	4.4427	0.7156	-50.0448
2491	0	Extremo 1A	0.095	62.016	-0.313	-3.3004	-0.0702	-52.7066
2491	0.5	Extremo 1A	0.095	70.2	-0.313	-3.3004	0.0864	-85.7605
2491	1	Extremo 1A	0.095	78.384	-0.313	-3.3004	0.243	-122.907
2491	0	Extremo 2A	0.095	62.016	-0.313	-3.3004	-0.0702	-52.7066
2491	0.5	Extremo 2A	0.095	70.2	-0.313	-3.3004	0.0864	-85.7605
2491	1	Extremo 2A	0.095	78.384	-0.313	-3.3004	0.243	-122.907
2493	0	Extremo 1A	-0.514	-76.549	-1.669	5.2892	-1.1575	-120.769
2493	0.5	Extremo 1A	-0.514	-68.365	-1.669	5.2892	-0.323	-84.5409
2493	1	Extremo 1A	-0.514	-60.181	-1.669	5.2892	0.5115	-52.4045
2493	0	Extremo 2A	-0.514	-76.549	-1.669	5.2892	-1.1575	-120.769
2493	0.5	Extremo 2A	-0.514	-68.365	-1.669	5.2892	-0.323	-84.5409
2493	1	Extremo 2A	-0.514	-60.181	-1.669	5.2892	0.5115	-52.4045
2494	0	Extremo 1A	0.076	67.569	-0.235	-0.6463	-0.0484	-54.5171
2494	0.5	Extremo 1A	0.076	75.754	-0.235	-0.6463	0.0689	-90.3478
2494	1	Extremo 1A	0.076	83.938	-0.235	-0.6463	0.1861	-130.271
2494	0	Extremo 2A	0.076	67.569	-0.235	-0.6463	-0.0484	-54.5171
2494	0.5	Extremo 2A	0.076	75.754	-0.235	-0.6463	0.0689	-90.3478
2494	1	Extremo 2A	0.076	83.938	-0.235	-0.6463	0.1861	-130.271
2496	0	Extremo 1A	-0.391	-83.57	-1.232	1.9607	-0.8614	-131.13
2496	0.5	Extremo 1A	-0.391	-75.386	-1.232	1.9607	-0.2456	-91.3906
2496	1	Extremo 1A	-0.391	-67.202	-1.232	1.9607	0.3702	-55.7438
2496	0	Extremo 2A	-0.391	-83.57	-1.232	1.9607	-0.8614	-131.13
2496	0.5	Extremo 2A	-0.391	-75.386	-1.232	1.9607	-0.2456	-91.3906
2496	1	Extremo 2A	-0.391	-67.202	-1.232	1.9607	0.3702	-55.7438
2497	0	Extremo 1A	0.06	79.044	-0.173	3.8603	-0.0324	-52.5944
2497	0.5	Extremo 1A	0.06	87.228	-0.173	3.8603	0.0541	-94.1625
2497	1	Extremo 1A	0.06	95.413	-0.173	3.8603	0.1406	-139.823
2497	0	Extremo 2A	0.06	79.044	-0.173	3.8603	-0.0324	-52.5944
2497	0.5	Extremo 2A	0.06	87.228	-0.173	3.8603	0.0541	-94.1625
2497	1	Extremo 2A	0.06	95.413	-0.173	3.8603	0.1406	-139.823
2499	0	Extremo 1A	-0.295	-99.778	-0.912	-5.5459	-0.6411	-146.842
2499	0.5	Extremo 1A	-0.295	-91.594	-0.912	-5.5459	-0.1851	-98.9991
2499	1	Extremo 1A	-0.295	-83.409	-0.912	-5.5459	0.2709	-55.2484
2499	0	Extremo 2A	-0.295	-99.778	-0.912	-5.5459	-0.6411	-146.842
2499	0.5	Extremo 2A	-0.295	-91.594	-0.912	-5.5459	-0.1851	-98.9991
2499	1	Extremo 2A	-0.295	-83.409	-0.912	-5.5459	0.2709	-55.2484
2500	0	Extremo 1A	0.046	84.133	-0.126	-0.3556	-0.0208	-44.1252
2500	0.5	Extremo 1A	0.046	92.317	-0.126	-0.3556	0.042	-88.2378
2500	1	Extremo 1A	0.046	100.502	-0.126	-0.3556	0.1048	-136.443
2500	0	Extremo 2A	0.046	84.133	-0.126	-0.3556	-0.0208	-44.1252
2500	0.5	Extremo 2A	0.046	92.317	-0.126	-0.3556	0.042	-88.2378
2500	1	Extremo 2A	0.046	100.502	-0.126	-0.3556	0.1048	-136.443
2502	0	Extremo 1A	-0.222	-108.598	-0.678	-2.7914	-0.4777	-146.538
2502	0.5	Extremo 1A	-0.222	-100.414	-0.678	-2.7914	-0.1388	-94.2846
2502	1	Extremo 1A	-0.222	-92.23	-0.678	-2.7914	0.2002	-46.1237
2502	0	Extremo 2A	-0.222	-108.598	-0.678	-2.7914	-0.4777	-146.538
2502	0.5	Extremo 2A	-0.222	-100.414	-0.678	-2.7914	-0.1388	-94.2846
2502	1	Extremo 2A	-0.222	-92.23	-0.678	-2.7914	0.2002	-46.1237
2503	0	Extremo 1A	0.035	79.102	-0.09	-4.5347	-0.0126	-52.6565
2503	0.5	Extremo 1A	0.035	87.286	-0.09	-4.5347	0.0323	-94.2535
2503	1	Extremo 1A	0.035	95.471	-0.09	-4.5347	0.0772	-139.943
2503	0	Extremo 2A	0.035	79.102	-0.09	-4.5347	-0.0126	-52.6565
2503	0.5	Extremo 2A	0.035	87.286	-0.09	-4.5347	0.0323	-94.2535
2503	1	Extremo 2A	0.035	95.471	-0.09	-4.5347	0.0772	-139.943
2505	0	Extremo 1A	-0.167	-99.811	-0.506	-0.0527	-0.3566	-146.896
2505	0.5	Extremo 1A	-0.167	-91.626	-0.506	-0.0527	-0.1037	-99.0364
2505	1	Extremo 1A	-0.167	-83.442	-0.506	-0.0527	0.1492	-55.2694
2505	0	Extremo 2A	-0.167	-99.811	-0.506	-0.0527	-0.3566	-146.896
2505	0.5	Extremo 2A	-0.167	-91.626	-0.506	-0.0527	-0.1037	-99.0364
2505	1	Extremo 2A	-0.167	-83.442	-0.506	-0.0527	0.1492	-55.2694
2506	0	Extremo 1A	0.026	67.698	-0.063	0.0891	-0.0071	-54.6476
2506	0.5	Extremo 1A	0.026	75.882	-0.063	0.0891	0.0246	-90.5428
2506	1	Extremo 1A	0.026	84.067	-0.063	0.0891	0.0562	-130.53
2506	0	Extremo 2A	0.026	67.698	-0.063	0.0891	-0.0071	-54.6476
2506	0.5	Extremo 2A	0.026	75.882	-0.063	0.0891	0.0246	-90.5428
2506	1	Extremo 2A	0.026	84.067	-0.063	0.0891	0.0562	-130.53
2508	0	Extremo 1A	-0.125	-83.643	-0.378	-7.6078	-0.2666	-131.241
2508	0.5	Extremo 1A	-0.125	-75.459	-0.378	-7.6078	-0.0774	-91.4657
2508	1	Extremo 1A	-0.125	-67.275	-0.378	-7.6078	0.1119	-55.7823
2508	0	Extremo 2A	-0.125	-83.643	-0.378	-7.6078	-0.2666	-131.241
2508	0.5	Extremo 2A	-0.125	-75.459	-0.378	-7.6078	-0.0774	-91.4657
2508	1	Extremo 2A	-0.125	-67.275	-0.378	-7.6078	0.1119	-55.7823
2509	0	Extremo 1A	0.019	62.24	-0.044	2.9555	-0.0033	-52.9111
2509	0.5	Extremo 1A	0.019	70.424	-0.044	2.9555	0.0185	-86.0773
2509	1	Extremo 1A	0.019	78.609	-0.044	2.9555	0.0404	-123.336
2509	0	Extremo 2A	0.019	62.24	-0.044	2.9555	-0.0033	-52.9111
2509	0.5	Extremo 2A	0.019	70.424	-0.044	2.9555	0.0185	-86.0773
2509	1	Extremo 2A	0.019	78.609	-0.044	2.9555	0.0404	-123.336
2511	0	Extremo 1A	-0.094	-76.677	-0.284	-11.0162	-0.1997	-120.937
2511	0.5	Extremo 1A	-0.094	-68.493	-0.284	-11.0162	-0.0577	-84.6442
2511	1	Extremo 1A	-0.094	-60.309	-0.284	-11.0162	0.0843	-52.4439
2511	0	Extremo 2A	-0.094	-76.677	-0.284	-11.0162	-0.1997	-120.937
2511	0.5	Extremo 2A	-0.094	-68.493	-0.284	-11.0162	-0.0577	-84.6442
2511	1	Extremo 2A	-0.094	-60.309	-0.284	-11.0162	0.0843	-52.4439
2512	0	Extremo 1A	0.014	60.648	-0.03	3.2531	-0.00094	-51.3799
2512	0.5	Extremo 1A	0.014	68.833	-0.03	3.2531	0.0139	-83.7502
2512	1	Extremo 1A	0.014	77.017	-0.03	3.2531	0.0286	-120.213
2512	0	Extremo 2A	0.014	60.648	-0.03	3.2531	-0.00094	-51.3799
2512	0.5	Extremo 2A	0.014	68.833	-0.03	3.2531	0.0139	-83.7502
2512	1	Extremo 2A	0.014	77.017	-0.03	3.2531	0.0286	-120.213
2514	0	Extremo 1A	-0.071	-74.776	-0.214	-10.2538	-0.1499	-116.618
2514	0.5	Extremo 1A	-0.071	-66.592	-0.214	-10.2538	-0.043	-81.2759
2514	1	Extremo 1A	-0.071	-58.407	-0.214	-10.2538	0.0638	-50.0262
2514	0	Extremo 2A	-0.071	-74.776	-0.214	-10.2538	-0.1499	-116.618
2514	0.5	Extremo 2A	-0.071	-66.592	-0.214	-10.2538	-0.043	-81.2759
2514	1	Extremo 2A	-0.071	-58.407	-0.214	-10.2538	0.0638	-50.0262
2515	0	Extremo 1A	0.01	60.436	-0.02	2.3766	0.00053	-50.6745
2515	0.5	Extremo 1A	0.01	68.62	-0.02	2.3766	0.0103	-82.9385
2515	1	Extremo 1A	0.01	76.804	-0.02	2.3766	0.02	-119.295
2515	0	Extremo 2A	0.01	60.436	-0.02	2.3766	0.00053	-50.6745
2515	0.5	Extremo 2A	0.01	68.62	-0.02	2.3766	0.0103	-82.9385
2515	1	Extremo 2A	0.01	76.804	-0.02	2.3766	0.02	-119.295
2517	0	Extremo 1A	-0.053	-74.469	-0.161	-7.6116	-0.1127	-115.187
2517	0.5	Extremo 1A	-0.053	-66.285	-0.161	-7.6116	-0.0321	-79.9986
2517	1	Extremo 1A	-0.053	-58.1	-0.161	-7.6116	0.0484	-48.9024
2517	0	Extremo 2A	-0.053	-74.469	-0.161	-7.6116	-0.1127	-115.187

2517	0.5	Extremo 2A	-0.053	-66.285	-0.161	-7.6116	-0.0321	-79.9986
2517	1	Extremo 2A	-0.053	-58.1	-0.161	-7.6116	0.0484	-48.9024
2518	0	Extremo 1A	0.00729	60.528	-0.012	1.1987	0.0014	-50.4465
2518	0.5	Extremo 1A	0.00729	68.712	-0.012	1.1987	0.0076	-82.7566
2518	1	Extremo 1A	0.00729	76.897	-0.012	1.1987	0.0138	-119.159
2518	0	Extremo 2A	0.00729	60.528	-0.012	1.1987	0.0014	-50.4465
2518	0.5	Extremo 2A	0.00729	68.712	-0.012	1.1987	0.0076	-82.7566
2518	1	Extremo 2A	0.00729	76.897	-0.012	1.1987	0.0138	-119.159
2520	0	Extremo 1A	-0.04	-74.495	-0.122	-4.3595	-0.0848	-114.788
2520	0.5	Extremo 1A	-0.04	-66.31	-0.122	-4.3595	-0.024	-79.5866
2520	1	Extremo 1A	-0.04	-58.126	-0.122	-4.3595	0.0368	-48.4775
2520	0	Extremo 2A	-0.04	-74.495	-0.122	-4.3595	-0.0848	-114.788
2520	0.5	Extremo 2A	-0.04	-66.31	-0.122	-4.3595	-0.024	-79.5866
2520	1	Extremo 2A	-0.04	-58.126	-0.122	-4.3595	0.0368	-48.4775
2521	0	Extremo 1A	0.00513	60.601	-0.00751	0.0073	0.0018	-50.3918
2521	0.5	Extremo 1A	0.00513	68.786	-0.00751	0.0073	0.0056	-82.7385
2521	1	Extremo 1A	0.00513	76.97	-0.00751	0.0073	0.0093	-119.178
2521	0	Extremo 2A	0.00513	60.601	-0.00751	0.0073	0.0018	-50.3918
2521	0.5	Extremo 2A	0.00513	68.786	-0.00751	0.0073	0.0056	-82.7385
2521	1	Extremo 2A	0.00513	76.97	-0.00751	0.0073	0.0093	-119.178
2523	0	Extremo 1A	-0.03	-74.533	-0.092	-0.9566	-0.064	-114.697
2523	0.5	Extremo 1A	-0.03	-66.349	-0.092	-0.9566	-0.0179	-79.4764
2523	1	Extremo 1A	-0.03	-58.165	-0.092	-0.9566	0.0281	-48.348
2523	0	Extremo 2A	-0.03	-74.533	-0.092	-0.9566	-0.064	-114.697
2523	0.5	Extremo 2A	-0.03	-66.349	-0.092	-0.9566	-0.0179	-79.4764
2523	1	Extremo 2A	-0.03	-58.165	-0.092	-0.9566	0.0281	-48.348
2524	0	Extremo 1A	0.00355	60.584	-0.00418	-1.1795	0.0019	-50.3814
2524	0.5	Extremo 1A	0.00355	68.768	-0.00418	-1.1795	0.004	-82.7195
2524	1	Extremo 1A	0.00355	76.953	-0.00418	-1.1795	0.0061	-119.15
2524	0	Extremo 2A	0.00355	60.584	-0.00418	-1.1795	0.0019	-50.3814
2524	0.5	Extremo 2A	0.00355	68.768	-0.00418	-1.1795	0.004	-82.7195
2524	1	Extremo 2A	0.00355	76.953	-0.00418	-1.1795	0.0061	-119.15
2526	0	Extremo 1A	-0.023	-74.529	-0.07	2.4689	-0.0483	-114.704
2526	0.5	Extremo 1A	-0.023	-66.345	-0.07	2.4689	-0.0134	-79.485
2526	1	Extremo 1A	-0.023	-58.161	-0.07	2.4689	0.0215	-48.3587
2526	0	Extremo 2A	-0.023	-74.529	-0.07	2.4689	-0.0483	-114.704
2526	0.5	Extremo 2A	-0.023	-66.345	-0.07	2.4689	-0.0134	-79.485
2526	1	Extremo 2A	-0.023	-58.161	-0.07	2.4689	0.0215	-48.3587
2527	0	Extremo 1A	0.00241	60.474	-0.00197	-2.4101	0.0019	-50.4226
2527	0.5	Extremo 1A	0.00241	68.659	-0.00197	-2.4101	0.0029	-82.7057
2527	1	Extremo 1A	0.00241	76.843	-0.00197	-2.4101	0.0039	-119.081
2527	0	Extremo 2A	0.00241	60.474	-0.00197	-2.4101	0.0019	-50.4226
2527	0.5	Extremo 2A	0.00241	68.659	-0.00197	-2.4101	0.0029	-82.7057
2527	1	Extremo 2A	0.00241	76.843	-0.00197	-2.4101	0.0039	-119.081
2529	0	Extremo 1A	-0.017	-74.482	-0.053	5.8633	-0.0365	-114.819
2529	0.5	Extremo 1A	-0.017	-66.298	-0.053	5.8633	-0.0101	-79.6242
2529	1	Extremo 1A	-0.017	-58.114	-0.053	5.8633	0.0164	-48.5214
2529	0	Extremo 2A	-0.017	-74.482	-0.053	5.8633	-0.0365	-114.819
2529	0.5	Extremo 2A	-0.017	-66.298	-0.053	5.8633	-0.0101	-79.6242
2529	1	Extremo 2A	-0.017	-58.114	-0.053	5.8633	0.0164	-48.5214
2530	0	Extremo 1A	0.0016	60.349	-0.00054	-3.6545	0.0018	-50.6673
2530	0.5	Extremo 1A	0.0016	68.533	-0.00054	-3.6545	0.0021	-82.8878
2530	1	Extremo 1A	0.0016	76.718	-0.00054	-3.6545	0.0024	-119.201
2530	0	Extremo 2A	0.0016	60.349	-0.00054	-3.6545	0.0018	-50.6673
2530	0.5	Extremo 2A	0.0016	68.533	-0.00054	-3.6545	0.0021	-82.8878
2530	1	Extremo 2A	0.0016	76.718	-0.00054	-3.6545	0.0024	-119.201
2532	0	Extremo 1A	-0.013	-74.456	-0.04	9.0752	-0.0277	-115.298
2532	0.5	Extremo 1A	-0.013	-66.272	-0.04	9.0752	-0.0076	-80.1162
2532	1	Extremo 1A	-0.013	-58.087	-0.04	9.0752	0.0126	-49.0264
2532	0	Extremo 2A	-0.013	-74.456	-0.04	9.0752	-0.0277	-115.298
2532	0.5	Extremo 2A	-0.013	-66.272	-0.04	9.0752	-0.0076	-80.1162
2532	1	Extremo 2A	-0.013	-58.087	-0.04	9.0752	0.0126	-49.0264
2533	0	Extremo 1A	0.00103	60.579	0.00033	-4.5739	0.0016	-51.4668
2533	0.5	Extremo 1A	0.00103	68.763	0.00033	-4.5739	0.0015	-83.8024
2533	1	Extremo 1A	0.00103	76.948	0.00033	-4.5739	0.0013	-120.23
2533	0	Extremo 2A	0.00103	60.579	0.00033	-4.5739	0.0016	-51.4668
2533	0.5	Extremo 2A	0.00103	68.763	0.00033	-4.5739	0.0015	-83.8024
2533	1	Extremo 2A	0.00103	76.948	0.00033	-4.5739	0.0013	-120.23
2535	0	Extremo 1A	-0.00972	-74.824	-0.031	11.5647	-0.021	-116.987
2535	0.5	Extremo 1A	-0.00972	-66.639	-0.031	11.5647	-0.0057	-81.621
2535	1	Extremo 1A	-0.00972	-58.455	-0.031	11.5647	0.0097	-50.3475
2535	0	Extremo 2A	-0.00972	-74.824	-0.031	11.5647	-0.021	-116.987
2535	0.5	Extremo 2A	-0.00972	-66.639	-0.031	11.5647	-0.0057	-81.621
2535	1	Extremo 2A	-0.00972	-58.455	-0.031	11.5647	0.0097	-50.3475
2536	0	Extremo 1A	0.00063	62.405	0.00084	-4.1563	0.0015	-53.2249
2536	0.5	Extremo 1A	0.00063	70.589	0.00084	-4.1563	0.001	-86.4733
2536	1	Extremo 1A	0.00063	78.773	0.00084	-4.1563	0.00062	-123.814
2536	0	Extremo 2A	0.00063	62.405	0.00084	-4.1563	0.0015	-53.225
2536	0.5	Extremo 2A	0.00063	70.589	0.00084	-4.1563	0.001	-86.4733
2536	1	Extremo 2A	0.00063	78.773	0.00084	-4.1563	0.00062	-123.814
2538	0	Extremo 1A	-0.00736	-77.055	-0.023	11.8464	-0.016	-122.048
2538	0.5	Extremo 1A	-0.00736	-68.87	-0.023	11.8464	-0.0043	-85.5671
2538	1	Extremo 1A	-0.00736	-60.686	-0.023	11.8464	0.0074	-53.1781
2538	0	Extremo 2A	-0.00736	-77.055	-0.023	11.8464	-0.016	-122.048
2538	0.5	Extremo 2A	-0.00736	-68.87	-0.023	11.8464	-0.0043	-85.5671
2538	1	Extremo 2A	-0.00736	-60.686	-0.023	11.8464	0.0074	-53.1781
2539	0	Extremo 1A	0.00036	68.705	0.00109	-0.7847	0.0013	-55.2265
2539	0.5	Extremo 1A	0.00036	76.89	0.00109	-0.7847	0.00072	-91.6252
2539	1	Extremo 1A	0.00036	85.074	0.00109	-0.7847	0.00017	-132.116
2539	0	Extremo 2A	0.00036	68.705	0.00109	-0.7847	0.0013	-55.2265
2539	0.5	Extremo 2A	0.00036	76.89	0.00109	-0.7847	0.00072	-91.6252
2539	1	Extremo 2A	0.00036	85.074	0.00109	-0.7847	0.00017	-132.116
2541	0	Extremo 1A	-0.00558	-85.187	-0.018	7.2474	-0.0121	-134.085
2541	0.5	Extremo 1A	-0.00558	-77.003	-0.018	7.2474	-0.0032	-93.538
2541	1	Extremo 1A	-0.00558	-68.818	-0.018	7.2474	0.0057	-57.0829
2541	0	Extremo 2A	-0.00558	-85.187	-0.018	7.2474	-0.0121	-134.085
2541	0.5	Extremo 2A	-0.00558	-77.003	-0.018	7.2474	-0.0032	-93.538
2541	1	Extremo 2A	-0.00558	-68.818	-0.018	7.2474	0.0057	-57.0829
2542	0	Extremo 1A	0.00018	81.894	0.00118	4.6113	0.0011	-52.9272
2542	0.5	Extremo 1A	0.00018	90.079	0.00118	4.6113	0.00049	-95.9205
2542	1	Extremo 1A	0.00018	98.263	0.00118	4.6113	-9.9E-05	-143.006
2542	0	Extremo 2A	0.00018	81.894	0.00118	4.6113	0.0011	-52.9272
2542	0.5	Extremo 2A	0.00018	90.079	0.00118	4.6113	0.00049	-95.9205
2542	1	Extremo 2A	0.00018	98.263	0.00118	4.6113	-9.9E-05	-143.006
2544	0	Extremo 1A	-0.00424	-104.03	-0.014	-2.2076	-0.0092	-152.351
2544	0.5	Extremo 1A	-0.00424	-95.846	-0.014	-2.2076	-0.0024	-102.381
2544	1	Extremo 1A	-0.00424	-87.662	-0.014	-2.2076	0.0044	-56.5046
2544	0	Extremo 2A	-0.00424	-104.03	-0.014	-2.2076	-0.0092	-152.351
2544	0.5	Extremo 2A	-0.00424	-95.846	-0.014	-2.2076	-0.0024	-102.381
2544	1	Extremo 2A	-0.00424	-87.662	-0.014	-2.2076	0.0044	-56.5046
2545	0	Extremo 1A	6.2E-05	87.732	0.00118	-0.1658	0.00092	-43.0803
2545	0.5	Extremo 1A	6.2E-05	95.917	0.00118	-0.1658	0.00033	-88.9926
2545	1	Extremo 1A	6.2E-05	104.101	0.00118	-0.1658	-0.00026	-138.997
2545	0	Extremo 2A	6.2E-05	87.732	0.00118	-0.1658	0.00092	-43.0803
2545	0.5	Extremo 2A	6.2E-05	95.917	0.00118	-0.1658	0.00033	-88.9926
2545	1	Extremo 2A	6.2E-05	104.101	0.00118	-0.1658	-0.00026	-138.997
2547	0	Extremo 1A	-0.00322	-114.28	-0.01	0.2921	-0.007	-151.971
2547	0.5	Extremo 1A	-0.00322	-106.096	-0.01	0.2921	-0.0018	-96.8768
2547	1	Extremo 1A	-0.00322	-97.911	-0.01	0.2921	0.0034	-45.875
2547	0	Extremo 2A	-0.00322	-114.28	-0.01	0.2921	-0.007	-151.971
2547	0.5	Extremo 2A	-0.00322	-106.096	-0.01	0.2921	-0.0018	-96.8768
2547	1	Extremo 2A	-0.00322	-97.911	-0.01	0.2921	0.0034	-45.875
2548	0	Extremo 1A	-1.1E-05	81.894	0.00111	-4.9434	0.00077	-52.9263
2548	0.5	Extremo 1A	-1.1E-05	90.078	0.00111	-4.9434	0.00022	-95.9193
2548	1	Extremo 1A	-1.1E-05	98.262	0.00111	-4.9434	-0.00034	-143.004
2548	0	Extremo 2A	-1.1E-05	81.894	0.00111	-4.9434	0.00077	-52.9263
2548	0.5	Extremo 2A	-1.1E-05	90.078	0.00111	-4.9434	0.00022	-95.9193
2548	1	Extremo 2A	-1.1E-05	98.263	0.00111	-4.9434	-0.00034	-143.005
2550	0	Extremo 1A	-0.00245	-104.03	-0.00798	2.792	-0.0054	-152.35
2550	0.5	Extremo 1A	-0.00245	-95.846	-0.00798	2.792	-0.0014	-102.381
2550	1	Extremo 1A	-0.00245	-87.661	-0.00798	2.792	0.0026	-56.5044
2550	0	Extremo 2A	-0.00245	-104.03	-0.00798	2.792	-0.0054	-152.35
2550	0.5	Extremo 2A	-0.00245	-95.846	-0.00798	2.792	-0.0014	-102.381
2550	1	Extremo 2A	-0.00245	-87.661	-0.00798	2.792	0.0026	-56.5044
2551	0	Extremo 1A	-5.4E-05	68.704	0.00101	0.4512	0.00064	-55.2246
2551	0.5	Extremo 1A	-5.4E-05	76.888	0.00101	0.4512	0.00014	-91.6225
2551	1	Extremo 1A	-5.4E-05	85.073	0.00101	0.4512	-0.00036	-132.113
2551	0	Extremo 2A	-5.4E-05	68.704	0.00101	0.4512	0.00064	-55.2246
2551	0.5	Extremo 2A	-5.4E-05	76.888	0.00101	0.4512	0.00014	-91.6226
2551	1	Extremo 2A	-5.4E-05	85.073	0.00101	0.4512	-0.00036	-132.113
2553	0	Extremo 1A	-0.00187	-85.186	-0.00612	-6.6627	-0.0041	-134.085
2553	0.5	Extremo 1A	-0.00187	-77.002	-0.00612	-6.6627	-0.0011	-93.5375
2553	1	Extremo 1A	-0.00187	-68.818	-0.00612	-6.6627	0.002	-57.0826
2553	0	Extremo 2A	-0.00187	-85.186	-0.00612	-6.6627	-0.0041	-134.085

2553	0.5	Extremo 2A	-0.00187	-77.002	-0.00612	-6.6627	-0.0011	-93.5375
2553	1	Extremo 2A	-0.00187	-68.818	-0.00612	-6.6627	0.002	-57.0826
2554	0	Extremo 1A	-7.6E-05	62.402	0.0009	3.8199	0.00053	-53.2215
2554	0.5	Extremo 1A	-7.6E-05	70.586	0.0009	3.8199	8.6E-05	-86.4685
2554	1	Extremo 1A	-7.6E-05	78.771	0.0009	3.8199	-0.00036	-123.808
2554	0	Extremo 2A	-7.6E-05	62.402	0.0009	3.8199	0.00053	-53.2215
2554	0.5	Extremo 2A	-7.6E-05	70.586	0.0009	3.8199	8.6E-05	-86.4685
2554	1	Extremo 2A	-7.6E-05	78.771	0.0009	3.8199	-0.00036	-123.808
2556	0	Extremo 1A	-0.00143	-77.054	-0.00469	-11.2613	-0.0031	-122.047
2556	0.5	Extremo 1A	-0.00143	-68.869	-0.00469	-11.2613	-0.0008	-85.5664
2556	1	Extremo 1A	-0.00143	-60.685	-0.00469	-11.2613	0.0016	-53.1779
2556	0	Extremo 2A	-0.00143	-77.054	-0.00469	-11.2613	-0.0031	-122.047
2556	0.5	Extremo 2A	-0.00143	-68.869	-0.00469	-11.2613	-0.0008	-85.5664
2556	1	Extremo 2A	-0.00143	-60.685	-0.00469	-11.2613	0.0016	-53.1779
2557	0	Extremo 1A	-8.6E-05	60.574	0.00078	4.2325	0.00044	-51.4609
2557	0.5	Extremo 1A	-8.6E-05	68.759	0.00078	4.2325	4.9E-05	-83.7942
2557	1	Extremo 1A	-8.6E-05	76.943	0.00078	4.2325	-0.00034	-120.22
2557	0	Extremo 2A	-8.6E-05	60.574	0.00078	4.2325	0.00044	-51.4609
2557	0.5	Extremo 2A	-8.6E-05	68.759	0.00078	4.2325	4.9E-05	-83.7942
2557	1	Extremo 2A	-8.6E-05	76.943	0.00078	4.2325	-0.00034	-120.22
2559	0	Extremo 1A	-0.00109	-74.822	-0.00361	-10.9789	-0.0024	-116.986
2559	0.5	Extremo 1A	-0.00109	-66.638	-0.00361	-10.9789	-0.0006	-81.6204
2559	1	Extremo 1A	-0.00109	-58.454	-0.00361	-10.9789	0.0012	-50.3475
2559	0	Extremo 2A	-0.00109	-74.822	-0.00361	-10.9789	-0.0024	-116.986
2559	0.5	Extremo 2A	-0.00109	-66.638	-0.00361	-10.9789	-0.0006	-81.6204
2559	1	Extremo 2A	-0.00109	-58.454	-0.00361	-10.9789	0.0012	-50.3475
2560	0	Extremo 1A	-8.7E-05	60.341	0.00067	3.3045	0.00036	-50.6575
2560	0.5	Extremo 1A	-8.7E-05	68.526	0.00067	3.3045	2.5E-05	-82.8742
2560	1	Extremo 1A	-8.7E-05	76.71	0.00067	3.3045	-0.00031	-119.183
2560	0	Extremo 2A	-8.7E-05	60.341	0.00067	3.3045	0.00036	-50.6575
2560	0.5	Extremo 2A	-8.7E-05	68.526	0.00067	3.3045	2.5E-05	-82.8742
2560	1	Extremo 2A	-8.7E-05	76.71	0.00067	3.3045	-0.00031	-119.183
2562	0	Extremo 1A	-0.00083	-74.454	-0.00277	-8.4888	-0.0018	-115.297
2562	0.5	Extremo 1A	-0.00083	-66.27	-0.00277	-8.4888	-0.00046	-80.116
2562	1	Extremo 1A	-0.00083	-58.086	-0.00277	-8.4888	0.00093	-49.0271
2562	0	Extremo 2A	-0.00083	-74.454	-0.00277	-8.4888	-0.0018	-115.297
2562	0.5	Extremo 2A	-0.00083	-66.27	-0.00277	-8.4888	-0.00046	-80.116
2562	1	Extremo 2A	-0.00083	-58.086	-0.00277	-8.4888	0.00093	-49.0271
2563	0	Extremo 1A	-8.3E-05	60.461	0.00057	2.0457	0.00029	-50.407
2563	0.5	Extremo 1A	-8.3E-05	68.645	0.00057	2.0457	9.5E-06	-82.6837
2563	1	Extremo 1A	-8.3E-05	76.83	0.00057	2.0457	-0.00028	-119.053
2563	0	Extremo 2A	-8.3E-05	60.461	0.00057	2.0457	0.00029	-50.407
2563	0.5	Extremo 2A	-8.3E-05	68.645	0.00057	2.0457	9.5E-06	-82.6837
2563	1	Extremo 2A	-8.3E-05	76.83	0.00057	2.0457	-0.00028	-119.053
2565	0	Extremo 1A	-0.00064	-74.48	-0.00213	-5.2766	-0.0014	-114.819
2565	0.5	Extremo 1A	-0.00064	-66.296	-0.00213	-5.2766	-0.00035	-79.6255
2565	1	Extremo 1A	-0.00064	-58.111	-0.00213	-5.2766	0.00072	-48.5238
2565	0	Extremo 2A	-0.00064	-74.48	-0.00213	-5.2766	-0.0014	-114.819
2565	0.5	Extremo 2A	-0.00064	-66.296	-0.00213	-5.2766	-0.00035	-79.6255
2565	1	Extremo 2A	-0.00064	-58.111	-0.00213	-5.2766	0.00072	-48.5238
2566	0	Extremo 1A	-7.6E-05	60.562	0.00048	0.7908	0.00024	-50.3575
2566	0.5	Extremo 1A	-7.6E-05	68.746	0.00048	0.7908	-2.9E-07	-82.6845
2566	1	Extremo 1A	-7.6E-05	76.931	0.00048	0.7908	-0.00024	-119.104
2566	0	Extremo 2A	-7.6E-05	60.562	0.00048	0.7909	0.00024	-50.3575
2566	0.5	Extremo 2A	-7.6E-05	68.746	0.00048	0.7909	-2.9E-07	-82.6845
2566	1	Extremo 2A	-7.6E-05	76.931	0.00048	0.7909	-0.00024	-119.104
2568	0	Extremo 1A	-0.00049	-74.526	-0.00164	-1.883	-0.0011	-114.707
2568	0.5	Extremo 1A	-0.00049	-66.342	-0.00164	-1.883	-0.00027	-79.4901
2568	1	Extremo 1A	-0.00049	-58.157	-0.00164	-1.883	0.00056	-48.3654
2568	0	Extremo 2A	-0.00049	-74.526	-0.00164	-1.883	-0.0011	-114.707
2568	0.5	Extremo 2A	-0.00049	-66.342	-0.00164	-1.883	-0.00027	-79.4901
2568	1	Extremo 2A	-0.00049	-58.157	-0.00164	-1.883	0.00056	-48.3654
2569	0	Extremo 1A	-6.8E-05	60.565	0.0004	-0.4351	0.00019	-50.3574
2569	0.5	Extremo 1A	-6.8E-05	68.749	0.0004	-0.4351	-6E-06	-82.6858
2569	1	Extremo 1A	-6.8E-05	76.933	0.0004	-0.4351	-0.00021	-119.106
2569	0	Extremo 2A	-6.8E-05	60.565	0.0004	-0.4351	0.00019	-50.3574
2569	0.5	Extremo 2A	-6.8E-05	68.749	0.0004	-0.4351	-6E-06	-82.6858
2569	1	Extremo 2A	-6.8E-05	76.933	0.0004	-0.4351	-0.00021	-119.106
2571	0	Extremo 1A	-0.00037	-74.528	-0.00127	1.5389	-0.00084	-114.709
2571	0.5	Extremo 1A	-0.00037	-66.344	-0.00127	1.5389	-0.0002	-79.4913
2571	1	Extremo 1A	-0.00037	-58.16	-0.00127	1.5389	0.00043	-48.3654
2571	0	Extremo 2A	-0.00037	-74.528	-0.00127	1.5388	-0.00084	-114.709
2571	0.5	Extremo 2A	-0.00037	-66.344	-0.00127	1.5388	-0.0002	-79.4913
2571	1	Extremo 2A	-0.00037	-58.16	-0.00127	1.5388	0.00043	-48.3654
2572	0	Extremo 1A	-5.9E-05	60.469	0.00033	-1.6863	0.00016	-50.4045
2572	0.5	Extremo 1A	-5.9E-05	68.653	0.00033	-1.6863	-9.1E-06	-82.6849
2572	1	Extremo 1A	-5.9E-05	76.837	0.00033	-1.6863	-0.00018	-119.058
2572	0	Extremo 2A	-5.9E-05	60.469	0.00033	-1.6863	0.00016	-50.4045
2572	0.5	Extremo 2A	-5.9E-05	68.653	0.00033	-1.6863	-9.1E-06	-82.6849
2572	1	Extremo 2A	-5.9E-05	76.837	0.00033	-1.6863	-0.00018	-119.058
2574	0	Extremo 1A	-0.00029	-74.488	-0.00098	4.9287	-0.00064	-114.825
2574	0.5	Extremo 1A	-0.00029	-66.304	-0.00098	4.9287	-0.00016	-79.6273
2574	1	Extremo 1A	-0.00029	-58.119	-0.00098	4.9287	0.00033	-48.5216
2574	0	Extremo 2A	-0.00029	-74.488	-0.00098	4.9287	-0.00064	-114.825
2574	0.5	Extremo 2A	-0.00029	-66.304	-0.00098	4.9287	-0.00016	-79.6273
2574	1	Extremo 2A	-0.00029	-58.119	-0.00098	4.9287	0.00033	-48.5216
2575	0	Extremo 1A	-5.1E-05	60.351	0.00028	-2.9425	0.00013	-50.6433
2575	0.5	Extremo 1A	-5.1E-05	68.535	0.00028	-2.9425	-1E-05	-82.8648
2575	1	Extremo 1A	-5.1E-05	76.72	0.00028	-2.9425	-0.00015	-119.179
2575	0	Extremo 2A	-5.1E-05	60.351	0.00028	-2.9425	0.00013	-50.6433
2575	0.5	Extremo 2A	-5.1E-05	68.535	0.00028	-2.9425	-1E-05	-82.8648
2575	1	Extremo 2A	-5.1E-05	76.72	0.00028	-2.9425	-0.00015	-119.179
2577	0	Extremo 1A	-0.00022	-74.468	-0.00075	8.1369	-0.0005	-115.298
2577	0.5	Extremo 1A	-0.00022	-66.284	-0.00075	8.1369	-0.00012	-80.1098
2577	1	Extremo 1A	-0.00022	-58.099	-0.00075	8.1369	0.00026	-49.0141
2577	0	Extremo 2A	-0.00022	-74.468	-0.00075	8.1369	-0.0005	-115.298
2577	0.5	Extremo 2A	-0.00022	-66.284	-0.00075	8.1369	-0.00012	-80.1098
2577	1	Extremo 2A	-0.00022	-58.099	-0.00075	8.1369	0.00026	-49.0141
2578	0	Extremo 1A	-4.4E-05	60.57	0.00023	-3.885	0.0001	-51.4129
2578	0.5	Extremo 1A	-4.4E-05	68.755	0.00023	-3.885	-1.1E-05	-83.7441
2578	1	Extremo 1A	-4.4E-05	76.939	0.00023	-3.885	-0.00012	-120.168
2578	0	Extremo 2A	-4.4E-05	60.57	0.00023	-3.8849	0.0001	-51.4129
2578	0.5	Extremo 2A	-4.4E-05	68.755	0.00023	-3.8849	-1.1E-05	-83.7441
2578	1	Extremo 2A	-4.4E-05	76.939	0.00023	-3.8849	-0.00012	-120.168
2580	0	Extremo 1A	-0.00017	-74.832	-0.00058	10.6371	-0.00038	-116.948
2580	0.5	Extremo 1A	-0.00017	-66.647	-0.00058	10.6371	-9.1E-05	-81.5779
2580	1	Extremo 1A	-0.00017	-58.463	-0.00058	10.6371	0.0002	-50.3004
2580	0	Extremo 2A	-0.00017	-74.832	-0.00058	10.6371	-0.00038	-116.948
2580	0.5	Extremo 2A	-0.00017	-66.647	-0.00058	10.6371	-9.1E-05	-81.5779
2580	1	Extremo 2A	-0.00017	-58.463	-0.00058	10.6371	0.0002	-50.3004
2581	0	Extremo 1A	-3.7E-05	62.325	0.00019	-3.5433	8.3E-05	-53.1043
2581	0.5	Extremo 1A	-3.7E-05	70.509	0.00019	-3.5433	-1E-05	-86.3128
2581	1	Extremo 1A	-3.7E-05	78.694	0.00019	-3.5433	-0.0001	-123.613
2581	0	Extremo 2A	-3.7E-05	62.325	0.00019	-3.5433	8.3E-05	-53.1043
2581	0.5	Extremo 2A	-3.7E-05	70.509	0.00019	-3.5433	-1E-05	-86.3128
2581	1	Extremo 2A	-3.7E-05	78.694	0.00019	-3.5433	-0.0001	-123.613
2583	0	Extremo 1A	-0.00013	-77.004	-0.00045	10.9864	-0.00029	-121.871
2583	0.5	Extremo 1A	-0.00013	-68.819	-0.00045	10.9864	-6.9E-05	-85.4154
2583	1	Extremo 1A	-0.00013	-60.635	-0.00045	10.9864	0.00016	-53.0519
2583	0	Extremo 2A	-0.00013	-77.004	-0.00045	10.9864	-0.00029	-121.871
2583	0.5	Extremo 2A	-0.00013	-68.819	-0.00045	10.9864	-6.9E-05	-85.4154
2583	1	Extremo 2A	-0.00013	-60.635	-0.00045	10.9864	0.00016	-53.0518
2584	0	Extremo 1A	-3.1E-05	68.397	0.00015	-0.361	6.6E-05	-55.029
2584	0.5	Extremo 1A	-3.1E-05	76.581	0.00015	-0.361	-9.3E-06	-91.2733
2584	1	Extremo 1A	-3.1E-05	84.765	0.00015	-0.361	-8.5E-05	-131.61
2584	0	Extremo 2A	-3.1E-05	68.397	0.00015	-0.361	6.6E-05	-55.029
2584	0.5	Extremo 2A	-3.1E-05	76.581	0.00015	-0.361	-9.3E-06	-91.2733
2584	1	Extremo 2A	-3.1E-05	84.765	0.00015	-0.361	-8.5E-05	-131.61
2586	0	Extremo 1A	-0.0001	-84.897	-0.00035	6.5917	-0.00023	-133.558
2586	0.5	Extremo 1A	-0.0001	-76.713	-0.00035	6.5917	-5.3E-05	-93.1554
2586	1	Extremo 1A	-0.0001	-68.529	-0.00035	6.5917	0.00012	-56.8449
2586	0	Extremo 2A	-0.0001	-84.897	-0.00035	6.5917	-0.00023	-133.558
2586	0.5	Extremo 2A	-0.0001	-76.713	-0.00035	6.5917	-5.3E-05	-93.1553
2586	1	Extremo 2A	-0.0001	-68.529	-0.00035	6.5917	0.00012	-56.8449
2587	0	Extremo 1A	-2.6E-05	81.119	0.00012	4.7639	5.3E-05	-52.8029
2587	0.5	Extremo 1A	-2.6E-05	89.304	0.00012	4.7639	-8.3E-06	-95.4087
2587	1	Extremo 1A	-2.6E-05	97.488	0.00012	4.7639	-7E-05	-142.107
2587	0	Extremo 2A	-2.6E-05	81.119	0.00012	4.7638	5.3E-05	-52.8029
2587	0.5	Extremo 2A	-2.6E-05	89.304	0.00012	4.7638	-8.3E-06	-95.4087
2587	1	Extremo 2A	-2.6E-05	97.488	0.00012	4.7638	-7E-05	-142.107
2589	0	Extremo 1A	-7.8E-05	-103.17	-0.00027	-2.5227	-0.00018	-151.277
2589	0.5	Extremo 1A	-7.8E-05	-94.986	-0.00027	-2.5227	-4.1E-05	-101.738
2589	1	Extremo 1A	-7.8E-05	-86.801	-0.00027	-2.5227	9.4E-05	-56.2915
2589	0	Extremo 2A	-7.8E-05	-103.17	-0.00027	-2.5227	-0.00018	-151.277

2589	0.5	Extremo 2A	-7.8E-05	-94.986	-0.00027	-2.5227	-4.1E-05	-101.738
2589	1	Extremo 2A	-7.8E-05	-86.801	-0.00027	-2.5227	9.4E-05	-56.2915
2590	0	Extremo 1A	-2.1E-05	86.751	1E-04	0.0595	4.2E-05	-43.2943
2590	0.5	Extremo 1A	-2.1E-05	94.936	1E-04	0.0595	-7.3E-06	-88.716
2590	1	Extremo 1A	-2.1E-05	103.12	1E-04	0.0595	-5.7E-05	-138.23
2590	0	Extremo 2A	-2.1E-05	86.751	1E-04	0.0595	4.2E-05	-43.2943
2590	0.5	Extremo 2A	-2.1E-05	94.936	1E-04	0.0595	-7.3E-06	-88.716
2590	1	Extremo 2A	-2.1E-05	103.12	1E-04	0.0595	-5.7E-05	-138.23
2592	0	Extremo 1A	-6E-05	-113.108	-0.00021	-0.0606	-0.00014	-150.917
2592	0.5	Extremo 1A	-6E-05	-104.924	-0.00021	-0.0606	-3.1E-05	-96.4089
2592	1	Extremo 1A	-6E-05	-96.739	-0.00021	-0.0606	7.3E-05	-45.9931
2592	0	Extremo 2A	-6E-05	-113.108	-0.00021	-0.0606	-0.00014	-150.917
2592	0.5	Extremo 2A	-6E-05	-104.924	-0.00021	-0.0606	-3.1E-05	-96.4088
2592	1	Extremo 2A	-6E-05	-96.739	-0.00021	-0.0606	7.3E-05	-45.9931
2593	0	Extremo 1A	-1.7E-05	81.119	8E-05	-4.6448	3.4E-05	-52.8031
2593	0.5	Extremo 1A	-1.7E-05	89.304	8E-05	-4.6448	-6.3E-06	-95.4089
2593	1	Extremo 1A	-1.7E-05	97.488	8E-05	-4.6448	-4.7E-05	-142.107
2593	0	Extremo 2A	-1.7E-05	81.119	8E-05	-4.6448	3.4E-05	-52.8031
2593	0.5	Extremo 2A	-1.7E-05	89.304	8E-05	-4.6448	-6.3E-06	-95.4089
2593	1	Extremo 2A	-1.7E-05	97.488	8E-05	-4.6448	-4.7E-05	-142.107
2595	0	Extremo 1A	-4.6E-05	-103.17	-0.00016	2.4014	-0.00011	-151.278
2595	0.5	Extremo 1A	-4.6E-05	-94.986	-0.00016	2.4014	-2.4E-05	-101.738
2595	1	Extremo 1A	-4.6E-05	-86.801	-0.00016	2.4014	5.7E-05	-56.2916
2595	0	Extremo 2A	-4.6E-05	-103.17	-0.00016	2.4014	-0.00011	-151.277
2595	0.5	Extremo 2A	-4.6E-05	-94.986	-0.00016	2.4014	-2.4E-05	-101.738
2595	1	Extremo 2A	-4.6E-05	-86.801	-0.00016	2.4014	5.7E-05	-56.2916
2596	0	Extremo 1A	-1.4E-05	68.397	6.5E-05	0.4803	2.7E-05	-55.0293
2596	0.5	Extremo 1A	-1.4E-05	76.581	6.5E-05	0.4803	-5.4E-06	-91.2738
2596	1	Extremo 1A	-1.4E-05	84.766	6.5E-05	0.4803	-3.8E-05	-131.611
2596	0	Extremo 2A	-1.4E-05	68.397	6.5E-05	0.4803	2.7E-05	-55.0293
2596	0.5	Extremo 2A	-1.4E-05	76.581	6.5E-05	0.4803	-5.4E-06	-91.2738
2596	1	Extremo 2A	-1.4E-05	84.766	6.5E-05	0.4803	-3.8E-05	-131.61
2598	0	Extremo 1A	-3.6E-05	-84.898	-0.00013	-6.7131	-8.1E-05	-133.558
2598	0.5	Extremo 1A	-3.6E-05	-76.713	-0.00013	-6.7131	-1.9E-05	-93.1556
2598	1	Extremo 1A	-3.6E-05	-68.529	-0.00013	-6.7131	4.4E-05	-56.8451
2598	0	Extremo 2A	-3.6E-05	-84.898	-0.00013	-6.7131	-8.1E-05	-133.558
2598	0.5	Extremo 2A	-3.6E-05	-76.713	-0.00013	-6.7131	-1.9E-05	-93.1556
2598	1	Extremo 2A	-3.6E-05	-68.529	-0.00013	-6.7131	4.4E-05	-56.8451
2599	0	Extremo 1A	-1.2E-05	62.325	5.2E-05	3.6631	2.2E-05	-53.1048
2599	0.5	Extremo 1A	-1.2E-05	70.51	5.2E-05	3.6631	-4.5E-06	-86.3136
2599	1	Extremo 1A	-1.2E-05	78.694	5.2E-05	3.6631	-3.1E-05	-123.615
2599	0	Extremo 2A	-1.2E-05	62.325	5.2E-05	3.6631	2.2E-05	-53.1048
2599	0.5	Extremo 2A	-1.2E-05	70.51	5.2E-05	3.6631	-4.5E-06	-86.3135
2599	1	Extremo 2A	-1.2E-05	78.694	5.2E-05	3.6631	-3.1E-05	-123.615
2601	0	Extremo 1A	-2.8E-05	-77.004	-9.8E-05	-11.1081	-6.3E-05	-121.872
2601	0.5	Extremo 1A	-2.8E-05	-68.82	-9.8E-05	-11.1081	-1.4E-05	-85.4159
2601	1	Extremo 1A	-2.8E-05	-60.635	-9.8E-05	-11.1081	3.5E-05	-53.0522
2601	0	Extremo 2A	-2.8E-05	-77.004	-9.8E-05	-11.1081	-6.3E-05	-121.872
2601	0.5	Extremo 2A	-2.8E-05	-68.82	-9.8E-05	-11.1081	-1.4E-05	-85.4159
2601	1	Extremo 2A	-2.8E-05	-60.635	-9.8E-05	-11.1081	3.5E-05	-53.0522
2602	0	Extremo 1A	-9.5E-06	60.571	4.2E-05	4.0056	1.7E-05	-51.4138
2602	0.5	Extremo 1A	-9.5E-06	68.755	4.2E-05	4.0056	-3.8E-06	-83.7454
2602	1	Extremo 1A	-9.5E-06	76.94	4.2E-05	4.0056	-2.5E-05	-120.169
2602	0	Extremo 2A	-9.5E-06	60.571	4.2E-05	4.0056	1.7E-05	-51.4138
2602	0.5	Extremo 2A	-9.5E-06	68.755	4.2E-05	4.0056	-3.8E-06	-83.7454
2602	1	Extremo 2A	-9.5E-06	76.94	4.2E-05	4.0056	-2.5E-05	-120.169
2604	0	Extremo 1A	-2.2E-05	-74.832	-7.6E-05	-10.7593	-4.9E-05	-116.949
2604	0.5	Extremo 1A	-2.2E-05	-66.648	-7.6E-05	-10.7593	-1.1E-05	-81.5787
2604	1	Extremo 1A	-2.2E-05	-58.463	-7.6E-05	-10.7593	2.7E-05	-50.3009
2604	0	Extremo 2A	-2.2E-05	-74.832	-7.6E-05	-10.7592	-4.9E-05	-116.949
2604	0.5	Extremo 2A	-2.2E-05	-66.648	-7.6E-05	-10.7592	-1.1E-05	-81.5787
2604	1	Extremo 2A	-2.2E-05	-58.463	-7.6E-05	-10.7592	2.7E-05	-50.3009
2605	0	Extremo 1A	-7.7E-06	60.352	3.4E-05	3.0645	1.4E-05	-50.6446
2605	0.5	Extremo 1A	-7.7E-06	68.537	3.4E-05	3.0645	-3.1E-06	-82.8668
2605	1	Extremo 1A	-7.7E-06	76.721	3.4E-05	3.0645	-2E-05	-119.181
2605	0	Extremo 2A	-7.7E-06	60.352	3.4E-05	3.0645	1.4E-05	-50.6446
2605	0.5	Extremo 2A	-7.7E-06	68.537	3.4E-05	3.0645	-3.1E-06	-82.8668
2605	1	Extremo 2A	-7.7E-06	76.721	3.4E-05	3.0645	-2E-05	-119.181
2607	0	Extremo 1A	-1.7E-05	-74.469	-5.9E-05	-8.2599	-3.8E-05	-115.299
2607	0.5	Extremo 1A	-1.7E-05	-66.284	-5.9E-05	-8.2599	-8.5E-06	-80.1109
2607	1	Extremo 1A	-1.7E-05	-58.1	-5.9E-05	-8.2599	2.1E-05	-49.0148
2607	0	Extremo 2A	-1.7E-05	-74.469	-5.9E-05	-8.2598	-3.8E-05	-115.299
2607	0.5	Extremo 2A	-1.7E-05	-66.284	-5.9E-05	-8.2598	-8.5E-06	-80.1109
2607	1	Extremo 2A	-1.7E-05	-58.1	-5.9E-05	-8.2598	2.1E-05	-49.0148
2608	0	Extremo 1A	-6.2E-06	60.471	2.7E-05	1.8105	1.1E-05	-50.4065
2608	0.5	Extremo 1A	-6.2E-06	68.655	2.7E-05	1.8105	-2.6E-06	-82.688
2608	1	Extremo 1A	-6.2E-06	76.84	2.7E-05	1.8105	-1.6E-05	-119.062
2608	0	Extremo 2A	-6.2E-06	60.471	2.7E-05	1.8104	1.1E-05	-50.4065
2608	0.5	Extremo 2A	-6.2E-06	68.655	2.7E-05	1.8104	-2.6E-06	-82.688
2608	1	Extremo 2A	-6.2E-06	76.84	2.7E-05	1.8104	-1.6E-05	-119.062
2610	0	Extremo 1A	-1.3E-05	-74.489	-4.6E-05	-5.053	-2.9E-05	-114.828
2610	0.5	Extremo 1A	-1.3E-05	-66.305	-4.6E-05	-5.053	-6.5E-06	-79.629
2610	1	Extremo 1A	-1.3E-05	-58.121	-4.6E-05	-5.053	1.6E-05	-48.5226
2610	0	Extremo 2A	-1.3E-05	-74.489	-4.6E-05	-5.0529	-2.9E-05	-114.828
2610	0.5	Extremo 2A	-1.3E-05	-66.305	-4.6E-05	-5.0529	-6.5E-06	-79.629
2610	1	Extremo 2A	-1.3E-05	-58.121	-4.6E-05	-5.0529	1.6E-05	-48.5226
2611	0	Extremo 1A	-5E-06	60.568	2.2E-05	0.5627	8.6E-06	-50.36
2611	0.5	Extremo 1A	-5E-06	68.752	2.2E-05	0.5627	-2.1E-06	-82.6901
2611	1	Extremo 1A	-5E-06	76.937	2.2E-05	0.5627	-1.3E-05	-119.112
2611	0	Extremo 2A	-5E-06	60.568	2.2E-05	0.5627	8.6E-06	-50.36
2611	0.5	Extremo 2A	-5E-06	68.752	2.2E-05	0.5627	-2.1E-06	-82.6901
2611	1	Extremo 2A	-5E-06	76.937	2.2E-05	0.5627	-1.3E-05	-119.112
2613	0	Extremo 1A	-1E-05	-74.531	-3.6E-05	-1.6652	-2.3E-05	-114.713
2613	0.5	Extremo 1A	-1E-05	-66.346	-3.6E-05	-1.6652	-5.1E-06	-79.4938
2613	1	Extremo 1A	-1E-05	-58.162	-3.6E-05	-1.6652	1.3E-05	-48.3667
2613	0	Extremo 2A	-1E-05	-74.531	-3.6E-05	-1.6651	-2.3E-05	-114.713
2613	0.5	Extremo 2A	-1E-05	-66.346	-3.6E-05	-1.6651	-5.1E-06	-79.4938
2613	1	Extremo 2A	-1E-05	-58.162	-3.6E-05	-1.6651	1.3E-05	-48.3667
2614	0	Extremo 1A	-4.1E-06	60.567	1.7E-05	-0.6582	6.9E-06	-50.3602
2614	0.5	Extremo 1A	-4.1E-06	68.752	1.7E-05	-0.6582	-1.7E-06	-82.6899
2614	1	Extremo 1A	-4.1E-06	76.936	1.7E-05	-0.6582	-1E-05	-119.112
2614	0	Extremo 2A	-4.1E-06	60.567	1.7E-05	-0.6583	6.9E-06	-50.3602
2614	0.5	Extremo 2A	-4.1E-06	68.752	1.7E-05	-0.6583	-1.7E-06	-82.6899
2614	1	Extremo 2A	-4.1E-06	76.936	1.7E-05	-0.6583	-1E-05	-119.112
2616	0	Extremo 1A	-7.8E-06	-74.53	-2.8E-05	1.7534	-1.8E-05	-114.712
2616	0.5	Extremo 1A	-7.8E-06	-66.346	-2.8E-05	1.7534	-3.9E-06	-79.4934
2616	1	Extremo 1A	-7.8E-06	-58.161	-2.8E-05	1.7534	1E-05	-48.3666
2616	0	Extremo 2A	-7.8E-06	-74.53	-2.8E-05	1.7535	-1.8E-05	-114.712
2616	0.5	Extremo 2A	-7.8E-06	-66.346	-2.8E-05	1.7535	-3.9E-06	-79.4934
2616	1	Extremo 2A	-7.8E-06	-58.161	-2.8E-05	1.7535	1E-05	-48.3666
2617	0	Extremo 1A	-3.3E-06	60.469	1.4E-05	-1.9067	5.4E-06	-50.4076
2617	0.5	Extremo 1A	-3.3E-06	68.653	1.4E-05	-1.9067	-1.4E-06	-82.6882
2617	1	Extremo 1A	-3.3E-06	76.838	1.4E-05	-1.9067	-8.3E-06	-119.061
2617	0	Extremo 2A	-3.3E-06	60.469	1.4E-05	-1.9067	5.4E-06	-50.4076
2617	0.5	Extremo 2A	-3.3E-06	68.653	1.4E-05	-1.9067	-1.4E-06	-82.6882
2617	1	Extremo 2A	-3.3E-06	76.838	1.4E-05	-1.9067	-8.3E-06	-119.061
2619	0	Extremo 1A	-6E-06	-74.487	-2.2E-05	5.1425	-1.4E-05	-114.826
2619	0.5	Extremo 1A	-6E-06	-66.303	-2.2E-05	5.1425	-3E-06	-79.6281
2619	1	Extremo 1A	-6E-06	-58.118	-2.2E-05	5.1425	7.8E-06	-48.5228
2619	0	Extremo 2A	-6E-06	-74.487	-2.2E-05	5.1426	-1.4E-05	-114.826
2619	0.5	Extremo 2A	-6E-06	-66.303	-2.2E-05	5.1426	-3E-06	-79.6281
2619	1	Extremo 2A	-6E-06	-58.118	-2.2E-05	5.1426	7.8E-06	-48.5228
2620	0	Extremo 1A	-2.6E-06	60.35	1.1E-05	-3.1607	4.3E-06	-50.6492
2620	0.5	Extremo 1A	-2.6E-06	68.535	1.1E-05	-3.1607	-1.2E-06	-82.8705
2620	1	Extremo 1A	-2.6E-06	76.719	1.1E-05	-3.1607	-6.6E-06	-119.184
2620	0	Extremo 2A	-2.6E-06	60.35	1.1E-05	-3.1607	4.3E-06	-50.6493
2620	0.5	Extremo 2A	-2.6E-06	68.535	1.1E-05	-3.1607	-1.2E-06	-82.8705
2620	1	Extremo 2A	-2.6E-06	76.719	1.1E-05	-3.1607	-6.6E-06	-119.184
2622	0	Extremo 1A	-4.7E-06	-74.465	-1.7E-05	8.3511	-1.1E-05	-115.298
2622	0.5	Extremo 1A	-4.7E-06	-66.28	-1.7E-05	8.3511	-2.3E-06	-80.1115
2622	1	Extremo 1A	-4.7E-06	-58.096	-1.7E-05	8.3511	6.1E-06	-49.0174
2622	0	Extremo 2A	-4.7E-06	-74.465	-1.7E-05	8.3512	-1.1E-05	-115.298
2622	0.5	Extremo 2A	-4.7E-06	-66.28	-1.7E-05	8.3512	-2.3E-06	-80.1115
2622	1	Extremo 2A	-4.7E-06	-58.096	-1.7E-05	8.3512	6.1E-06	-49.0174
2623	0	Extremo 1A	-2.1E-06	60.573	8.7E-06	-4.0967	3.4E-06	-51.4279
2623	0.5	Extremo 1A	-2.1E-06	68.758	8.7E-06	-4.0967	-9.4E-07	-83.7606
2623	1	Extremo 1A	-2.1E-06	76.942	8.7E-06	-4.0967	-5.3E-06	-120.186
2623	0	Extremo 2A	-2.1E-06	60.573	8.7E-06	-4.0967	3.4E-06	-51.4279
2623	0.5	Extremo 2A	-2.1E-06	68.758	8.7E-06	-4.0967	-9.4E-07	-83.7607
2623	1	Extremo 2A	-2.1E-06	76.942	8.7E-06	-4.0967	-5.3E-06	-120.186
2625	0	Extremo 1A	-3.6E-06	-74.829	-1.3E-05	10.8491	-8.4E-06	-116.956
2625	0.5	Extremo 1A	-3.6E-06	-66.644	-1.3E-05	10.8491	-1.8E-06	-81.588
2625	1	Extremo 1A	-3.6E-06	-58.46	-1.3E-05	10.8491	4.7E-06	-50.3119
2625	0	Extremo 2A	-3.6E-06	-74.829	-1.3E-05	10.8492	-8.4E-06	-116.956

2625	0.5	Extremo 2A	-3.6E-06	-66.644	-1.3E-05	10.8492	-1.8E-06	-81.588
2625	1	Extremo 2A	-3.6E-06	-58.46	-1.3E-05	10.8492	4.7E-06	-50.3119
2626	0	Extremo 1A	-1.7E-06	62.348	6.9E-06	-3.7332	2.7E-06	-53.138
2626	0.5	Extremo 1A	-1.7E-06	70.532	6.9E-06	-3.7332	-7.6E-07	-86.3579
2626	1	Extremo 1A	-1.7E-06	78.716	6.9E-06	-3.7332	-4.2E-06	-123.67
2626	0	Extremo 2A	-1.7E-06	62.348	6.9E-06	-3.7332	2.7E-06	-53.138
2626	0.5	Extremo 2A	-1.7E-06	70.532	6.9E-06	-3.7332	-7.6E-07	-86.3579
2626	1	Extremo 2A	-1.7E-06	78.716	6.9E-06	-3.7332	-4.2E-06	-123.67
2628	0	Extremo 1A	-2.8E-06	-77.015	-1E-05	11.1826	-6.5E-06	-121.914
2628	0.5	Extremo 1A	-2.8E-06	-68.831	-1E-05	11.1826	-1.4E-06	-85.4524
2628	1	Extremo 1A	-2.8E-06	-60.647	-1E-05	11.1826	3.7E-06	-53.083
2628	0	Extremo 2A	-2.8E-06	-77.015	-1E-05	11.1826	-6.5E-06	-121.914
2628	0.5	Extremo 2A	-2.8E-06	-68.831	-1E-05	11.1826	-1.4E-06	-85.4524
2628	1	Extremo 2A	-2.8E-06	-60.647	-1E-05	11.1826	3.7E-06	-53.083
2629	0	Extremo 1A	-1.3E-06	68.481	5.5E-06	-0.4978	2.1E-06	-55.084
2629	0.5	Extremo 1A	-1.3E-06	76.666	5.5E-06	-0.4978	-6.1E-07	-91.3707
2629	1	Extremo 1A	-1.3E-06	84.85	5.5E-06	-0.4978	-3.4E-06	-131.75
2629	0	Extremo 2A	-1.3E-06	68.481	5.5E-06	-0.4978	2.1E-06	-55.084
2629	0.5	Extremo 2A	-1.3E-06	76.666	5.5E-06	-0.4978	-6.1E-07	-91.3708
2629	1	Extremo 2A	-1.3E-06	84.85	5.5E-06	-0.4978	-3.4E-06	-131.75
2631	0	Extremo 1A	-2.2E-06	-84.97	-8E-06	6.7378	-5.1E-06	-133.69
2631	0.5	Extremo 1A	-2.2E-06	-76.786	-8E-06	6.7378	-1.1E-06	-93.2509
2631	1	Extremo 1A	-2.2E-06	-68.601	-8E-06	6.7378	2.9E-06	-56.9042
2631	0	Extremo 2A	-2.2E-06	-84.97	-8E-06	6.7377	-5.1E-06	-133.69
2631	0.5	Extremo 2A	-2.2E-06	-76.786	-8E-06	6.7377	-1.1E-06	-93.251
2631	1	Extremo 2A	-2.2E-06	-68.601	-8E-06	6.7377	2.9E-06	-56.9043
2632	0	Extremo 1A	-1.1E-06	81.329	4.4E-06	4.703	1.7E-06	-52.839
2632	0.5	Extremo 1A	-1.1E-06	89.514	4.4E-06	4.703	-4.9E-07	-95.5496
2632	1	Extremo 1A	-1.1E-06	97.698	4.4E-06	4.703	-2.7E-06	-142.353
2632	0	Extremo 2A	-1.1E-06	81.329	4.4E-06	4.7031	1.7E-06	-52.839
2632	0.5	Extremo 2A	-1.1E-06	89.514	4.4E-06	4.7031	-4.9E-07	-95.5498
2632	1	Extremo 2A	-1.1E-06	97.698	4.4E-06	4.7031	-2.7E-06	-142.353
2634	0	Extremo 1A	-1.7E-06	-103.39	-6.2E-06	-2.461	-4E-06	-151.549
2634	0.5	Extremo 1A	-1.7E-06	-95.205	-6.2E-06	-2.461	-8.4E-07	-101.9
2634	1	Extremo 1A	-1.7E-06	-87.021	-6.2E-06	-2.461	2.3E-06	-56.3438
2634	0	Extremo 2A	-1.7E-06	-103.39	-6.2E-06	-2.461	-4E-06	-151.549
2634	0.5	Extremo 2A	-1.7E-06	-95.205	-6.2E-06	-2.461	-8.4E-07	-101.901
2634	1	Extremo 2A	-1.7E-06	-87.021	-6.2E-06	-2.461	2.3E-06	-56.3439
2635	0	Extremo 1A	-8.5E-07	87.016	3.5E-06	-0.0164	1.3E-06	-43.2404
2635	0.5	Extremo 1A	-8.5E-07	95.201	3.5E-06	-0.0164	-4E-07	-88.7947
2635	1	Extremo 1A	-8.5E-07	103.385	3.5E-06	-0.0164	-2.1E-06	-138.441
2635	0	Extremo 2A	-8.5E-07	87.017	3.5E-06	-0.0164	1.3E-06	-43.2403
2635	0.5	Extremo 2A	-8.5E-07	95.201	3.5E-06	-0.0164	-4E-07	-88.7948
2635	1	Extremo 2A	-8.5E-07	103.385	3.5E-06	-0.0164	-2.1E-06	-138.441
2637	0	Extremo 1A	-1.3E-06	-113.408	-4.9E-06	0.0154	-3.1E-06	-151.183
2637	0.5	Extremo 1A	-1.3E-06	-105.224	-4.9E-06	0.0154	-6.6E-07	-96.5251
2637	1	Extremo 1A	-1.3E-06	-97.039	-4.9E-06	0.0154	1.8E-06	-45.9594
2637	0	Extremo 2A	-1.3E-06	-113.408	-4.9E-06	0.0153	-3.1E-06	-151.183
2637	0.5	Extremo 2A	-1.3E-06	-105.224	-4.9E-06	0.0153	-6.6E-07	-96.5252
2637	1	Extremo 2A	-1.3E-06	-97.039	-4.9E-06	0.0153	1.8E-06	-45.9594
2638	0	Extremo 1A	-6.8E-07	81.329	2.8E-06	-4.7359	1.1E-06	-52.8389
2638	0.5	Extremo 1A	-6.8E-07	89.514	2.8E-06	-4.7359	-3.2E-07	-95.5496
2638	1	Extremo 1A	-6.8E-07	97.698	2.8E-06	-4.7359	-1.7E-06	-142.352
2638	0	Extremo 2A	-6.8E-07	81.329	2.8E-06	-4.7358	1.1E-06	-52.8389
2638	0.5	Extremo 2A	-6.8E-07	89.514	2.8E-06	-4.7358	-3.2E-07	-95.5497
2638	1	Extremo 2A	-6.8E-07	97.698	2.8E-06	-4.7358	-1.7E-06	-142.353
2640	0	Extremo 1A	-1E-06	-103.39	-3.8E-06	2.4917	-2.4E-06	-151.549
2640	0.5	Extremo 1A	-1E-06	-95.205	-3.8E-06	2.4917	-5.1E-07	-101.9
2640	1	Extremo 1A	-1E-06	-87.021	-3.8E-06	2.4917	1.4E-06	-56.3438
2640	0	Extremo 2A	-1E-06	-103.39	-3.8E-06	2.4916	-2.4E-06	-151.549
2640	0.5	Extremo 2A	-1E-06	-95.205	-3.8E-06	2.4916	-5.1E-07	-101.9
2640	1	Extremo 2A	-1E-06	-87.021	-3.8E-06	2.4916	1.4E-06	-56.3438
2641	0	Extremo 1A	-5.4E-07	68.481	2.2E-06	0.4649	8.4E-07	-55.0839
2641	0.5	Extremo 1A	-5.4E-07	76.666	2.2E-06	0.4649	-2.5E-07	-91.3706
2641	1	Extremo 1A	-5.4E-07	84.85	2.2E-06	0.4649	-1.3E-06	-131.75
2641	0	Extremo 2A	-5.4E-07	68.481	2.2E-06	0.465	8.4E-07	-55.0839
2641	0.5	Extremo 2A	-5.4E-07	76.666	2.2E-06	0.465	-2.5E-07	-91.3707
2641	1	Extremo 2A	-5.4E-07	84.85	2.2E-06	0.465	-1.3E-06	-131.75
2643	0	Extremo 1A	-8.1E-07	-84.97	-3E-06	-6.707	-1.9E-06	-133.69
2643	0.5	Extremo 1A	-8.1E-07	-76.786	-3E-06	-6.707	-4E-07	-93.2508
2643	1	Extremo 1A	-8.1E-07	-68.601	-3E-06	-6.707	1.1E-06	-56.9042
2643	0	Extremo 2A	-8.1E-07	-84.97	-3E-06	-6.7071	-1.9E-06	-133.69
2643	0.5	Extremo 2A	-8.1E-07	-76.786	-3E-06	-6.7071	-4E-07	-93.2509
2643	1	Extremo 2A	-8.1E-07	-68.601	-3E-06	-6.7071	1.1E-06	-56.9042
2644	0	Extremo 1A	-4.3E-07	62.348	1.7E-06	3.7002	6.6E-07	-53.1378
2644	0.5	Extremo 1A	-4.3E-07	70.532	1.7E-06	3.7002	-2E-07	-86.3577
2644	1	Extremo 1A	-4.3E-07	78.716	1.7E-06	3.7002	-1.1E-06	-123.67
2644	0	Extremo 2A	-4.3E-07	62.348	1.7E-06	3.7003	6.6E-07	-53.1379
2644	0.5	Extremo 2A	-4.3E-07	70.532	1.7E-06	3.7003	-2E-07	-86.3577
2644	1	Extremo 2A	-4.3E-07	78.716	1.7E-06	3.7003	-1.1E-06	-123.67
2646	0	Extremo 1A	-6.3E-07	-77.015	-2.3E-06	-11.1517	-1.5E-06	-121.914
2646	0.5	Extremo 1A	-6.3E-07	-68.831	-2.3E-06	-11.1517	-3.1E-07	-85.4522
2646	1	Extremo 1A	-6.3E-07	-60.646	-2.3E-06	-11.1517	8.5E-07	-53.0829
2646	0	Extremo 2A	-6.3E-07	-77.015	-2.3E-06	-11.1519	-1.5E-06	-121.914
2646	0.5	Extremo 2A	-6.3E-07	-68.831	-2.3E-06	-11.1519	-3.1E-07	-85.4523
2646	1	Extremo 2A	-6.3E-07	-60.646	-2.3E-06	-11.1519	8.5E-07	-53.0829
2647	0	Extremo 1A	-3.4E-07	60.573	1.4E-06	4.0634	5.2E-07	-51.4277
2647	0.5	Extremo 1A	-3.4E-07	68.757	1.4E-06	4.0634	-1.6E-07	-83.7603
2647	1	Extremo 1A	-3.4E-07	76.942	1.4E-06	4.0634	-8.5E-07	-120.185
2647	0	Extremo 2A	-3.4E-07	60.573	1.4E-06	4.0636	5.2E-07	-51.4277
2647	0.5	Extremo 2A	-3.4E-07	68.757	1.4E-06	4.0636	-1.6E-07	-83.7604
2647	1	Extremo 2A	-3.4E-07	76.942	1.4E-06	4.0636	-8.5E-07	-120.185
2649	0	Extremo 1A	-4.9E-07	-74.829	-1.8E-06	-10.8181	-1.1E-06	-116.956
2649	0.5	Extremo 1A	-4.9E-07	-66.644	-1.8E-06	-10.8181	-2.4E-07	-81.5877
2649	1	Extremo 1A	-4.9E-07	-58.46	-1.8E-06	-10.8181	6.6E-07	-50.3117
2649	0	Extremo 2A	-4.9E-07	-74.829	-1.8E-06	-10.8183	-1.1E-06	-116.956
2649	0.5	Extremo 2A	-4.9E-07	-66.644	-1.8E-06	-10.8183	-2.4E-07	-81.5877
2649	1	Extremo 2A	-4.9E-07	-58.46	-1.8E-06	-10.8183	6.6E-07	-50.3117
2650	0	Extremo 1A	-2.7E-07	60.35	1.1E-06	3.1271	4.1E-07	-50.6489
2650	0.5	Extremo 1A	-2.7E-07	68.534	1.1E-06	3.1271	-1.3E-07	-82.87
2650	1	Extremo 1A	-2.7E-07	76.719	1.1E-06	3.1271	-6.7E-07	-119.183
2650	0	Extremo 2A	-2.7E-07	60.35	1.1E-06	3.1273	4.1E-07	-50.649
2650	0.5	Extremo 2A	-2.7E-07	68.534	1.1E-06	3.1273	-1.3E-07	-82.87
2650	1	Extremo 2A	-2.7E-07	76.719	1.1E-06	3.1273	-6.7E-07	-119.183
2652	0	Extremo 1A	-3.9E-07	-74.465	-1.4E-06	-8.3199	-8.9E-07	-115.297
2652	0.5	Extremo 1A	-3.9E-07	-66.28	-1.4E-06	-8.3199	-1.9E-07	-80.1112
2652	1	Extremo 1A	-3.9E-07	-58.096	-1.4E-06	-8.3199	5.2E-07	-49.0172
2652	0	Extremo 2A	-3.9E-07	-74.465	-1.4E-06	-8.3201	-8.9E-07	-115.297
2652	0.5	Extremo 2A	-3.9E-07	-66.28	-1.4E-06	-8.3201	-1.9E-07	-80.1112
2652	1	Extremo 2A	-3.9E-07	-58.096	-1.4E-06	-8.3201	5.2E-07	-49.0172
2653	0	Extremo 1A	-2.1E-07	60.469	8.6E-07	1.8726	3.3E-07	-50.4071
2653	0.5	Extremo 1A	-2.1E-07	68.653	8.6E-07	1.8726	-1E-07	-82.6875
2653	1	Extremo 1A	-2.1E-07	76.837	8.6E-07	1.8726	-5.3E-07	-119.06
2653	0	Extremo 2A	-2.1E-07	60.469	8.6E-07	1.8728	3.3E-07	-50.4072
2653	0.5	Extremo 2A	-2.1E-07	68.653	8.6E-07	1.8728	-1E-07	-82.6875
2653	1	Extremo 2A	-2.1E-07	76.837	8.6E-07	1.8728	-5.3E-07	-119.06
2655	0	Extremo 1A	-3E-07	-74.487	-1.1E-06	-5.1109	-7E-07	-114.825
2655	0.5	Extremo 1A	-3E-07	-66.302	-1.1E-06	-5.1109	-1.5E-07	-79.6275
2655	1	Extremo 1A	-3E-07	-58.118	-1.1E-06	-5.1109	4.1E-07	-48.5225
2655	0	Extremo 2A	-3E-07	-74.487	-1.1E-06	-5.1111	-7E-07	-114.825
2655	0.5	Extremo 2A	-3E-07	-66.302	-1.1E-06	-5.1111	-1.5E-07	-79.6275
2655	1	Extremo 2A	-3E-07	-58.118	-1.1E-06	-5.1111	4.1E-07	-48.5225
2656	0	Extremo 1A	-1.7E-07	60.567	6.8E-07	0.6234	2.6E-07	-50.3596
2656	0.5	Extremo 1A	-1.7E-07	68.751	6.8E-07	0.6234	-8.2E-08	-82.689
2656	1	Extremo 1A	-1.7E-07	76.935	6.8E-07	0.6234	-4.2E-07	-119.111
2656	0	Extremo 2A	-1.7E-07	60.567	6.8E-07	0.6236	2.6E-07	-50.3596
2656	0.5	Extremo 2A	-1.7E-07	68.751	6.8E-07	0.6236	-8.2E-08	-82.689
2656	1	Extremo 2A	-1.7E-07	76.935	6.8E-07	0.6236	-4.2E-07	-119.111
2658	0	Extremo 1A	-2.3E-07	-74.529	-8.6E-07	-1.7212	-5.4E-07	-114.711
2658	0.5	Extremo 1A	-2.3E-07	-66.345	-8.6E-07	-1.7212	-1.1E-07	-79.4925
2658	1	Extremo 1A	-2.3E-07	-58.161	-8.6E-07	-1.7212	3.2E-07	-48.3661
2658	0	Extremo 2A	-2.3E-07	-74.529	-8.6E-07	-1.7213	-5.4E-07	-114.711
2658	0.5	Extremo 2A	-2.3E-07	-66.345	-8.6E-07	-1.7213	-1.1E-07	-79.4925
2658	1	Extremo 2A	-2.3E-07	-58.161	-8.6E-07	-1.7213	3.2E-07	-48.3661
2659	0	Extremo 1A	-1.3E-07	60.567	5.4E-07	-0.5987	2E-07	-50.3596
2659	0.5	Extremo 1A	-1.3E-07	68.751	5.4E-07	-0.5987	-6.5E-08	-82.689
2659	1	Extremo 1A	-1.3E-07	76.935	5.4E-07	-0.5987	-3.3E-07	-119.111
2659	0	Extremo 2A	-1.3E-07	60.567	5.4E-07	-0.5985	2E-07	-50.3596
2659	0.5	Extremo 2A	-1.3E-07	68.751	5.4E-07	-0.5985	-6.5E-08	-82.689
2659	1	Extremo 2A	-1.3E-07	76.935	5.4E-07	-0.5985	-3.3E-07	-119.111
2661	0	Extremo 1A	-1.8E-07	-74.53	-6.8E-07	1.6985	-4.3E-07	-114.711
2661	0.5	Extremo 1A	-1.8E-07	-66.345	-6.8E-07	1.6985	-8.8E-08	-79.4927
2661	1	Extremo 1A	-1.8E-07	-58.161	-6.8E-07	1.6985	2.5E-07	-48.3662
2661	0	Extremo 2A	-1.8E-07	-74.53	-6.8E-07	1.6983	-4.3E-07	-114.711

2661	0.5	Extremo 2A	-1.8E-07	-66.345	-6.8E-07	1.6983	-8.8E-08	-79.4927
2661	1	Extremo 2A	-1.8E-07	-58.161	-6.8E-07	1.6983	2.5E-07	-48.3662
2662	0	Extremo 1A	-1.1E-07	60.469	4.2E-07	-1.8477	1.6E-07	-50.4068
2662	0.5	Extremo 1A	-1.1E-07	68.653	4.2E-07	-1.8477	-5.2E-08	-82.6874
2662	1	Extremo 1A	-1.1E-07	76.838	4.2E-07	-1.8477	-2.6E-07	-119.06
2662	0	Extremo 2A	-1.1E-07	60.469	4.2E-07	-1.8475	1.6E-07	-50.4068
2662	0.5	Extremo 2A	-1.1E-07	68.653	4.2E-07	-1.8475	-5.2E-08	-82.6874
2662	1	Extremo 2A	-1.1E-07	76.838	4.2E-07	-1.8475	-2.6E-07	-119.06
2664	0	Extremo 1A	-1.4E-07	-74.487	-5.3E-07	5.0879	-3.3E-07	-114.825
2664	0.5	Extremo 1A	-1.4E-07	-66.303	-5.3E-07	5.0879	-6.9E-08	-79.6278
2664	1	Extremo 1A	-1.4E-07	-58.118	-5.3E-07	5.0879	2E-07	-48.5224
2664	0	Extremo 2A	-1.4E-07	-74.487	-5.3E-07	5.0877	-3.3E-07	-114.825
2664	0.5	Extremo 2A	-1.4E-07	-66.303	-5.3E-07	5.0877	-6.9E-08	-79.6278
2664	1	Extremo 2A	-1.4E-07	-58.118	-5.3E-07	5.0877	2E-07	-48.5224
2665	0	Extremo 1A	-8.5E-08	60.35	3.3E-07	-3.1023	1.3E-07	-50.6477
2665	0.5	Extremo 1A	-8.5E-08	68.535	3.3E-07	-3.1023	-4.1E-08	-82.869
2665	1	Extremo 1A	-8.5E-08	76.719	3.3E-07	-3.1023	-2.1E-07	-119.183
2665	0	Extremo 2A	-8.5E-08	60.35	3.3E-07	-3.1021	1.3E-07	-50.6477
2665	0.5	Extremo 2A	-8.5E-08	68.535	3.3E-07	-3.1021	-4.1E-08	-82.869
2665	1	Extremo 2A	-8.5E-08	76.719	3.3E-07	-3.1021	-2.1E-07	-119.183
2667	0	Extremo 1A	-1.1E-07	-74.466	-4.1E-07	8.2964	-2.6E-07	-115.298
2667	0.5	Extremo 1A	-1.1E-07	-66.281	-4.1E-07	8.2964	-5.4E-08	-80.1111
2667	1	Extremo 1A	-1.1E-07	-58.097	-4.1E-07	8.2964	1.5E-07	-49.0166
2667	0	Extremo 2A	-1.1E-07	-74.466	-4.1E-07	8.2962	-2.6E-07	-115.298
2667	0.5	Extremo 2A	-1.1E-07	-66.281	-4.1E-07	8.2962	-5.4E-08	-80.1111
2667	1	Extremo 2A	-1.1E-07	-58.097	-4.1E-07	8.2962	1.5E-07	-49.0165
2668	0	Extremo 1A	-6.7E-08	60.572	2.6E-07	-4.0399	9.9E-08	-51.424
2668	0.5	Extremo 1A	-6.7E-08	68.757	2.6E-07	-4.0399	-3.3E-08	-83.7563
2668	1	Extremo 1A	-6.7E-08	76.941	2.6E-07	-4.0399	-1.6E-07	-120.181
2668	0	Extremo 2A	-6.7E-08	60.572	2.6E-07	-4.0398	9.9E-08	-51.424
2668	0.5	Extremo 2A	-6.7E-08	68.757	2.6E-07	-4.0398	-3.3E-08	-83.7563
2668	1	Extremo 2A	-6.7E-08	76.941	2.6E-07	-4.0398	-1.6E-07	-120.181
2670	0	Extremo 1A	-8.8E-08	-74.829	-3.2E-07	10.7949	-2E-07	-116.954
2670	0.5	Extremo 1A	-8.8E-08	-66.645	-3.2E-07	10.7949	-4.2E-08	-81.5854
2670	1	Extremo 1A	-8.8E-08	-58.461	-3.2E-07	10.7949	1.2E-07	-50.309
2670	0	Extremo 2A	-8.8E-08	-74.829	-3.2E-07	10.7948	-2E-07	-116.954
2670	0.5	Extremo 2A	-8.8E-08	-66.645	-3.2E-07	10.7948	-4.2E-08	-81.5854
2670	1	Extremo 2A	-8.8E-08	-58.461	-3.2E-07	10.7948	1.2E-07	-50.3089
2671	0	Extremo 1A	-5.3E-08	62.342	2.1E-07	-3.6822	7.8E-08	-53.1292
2671	0.5	Extremo 1A	-5.3E-08	70.526	2.1E-07	-3.6822	-2.6E-08	-86.3461
2671	1	Extremo 1A	-5.3E-08	78.71	2.1E-07	-3.6822	-1.3E-07	-123.655
2671	0	Extremo 2A	-5.3E-08	62.342	2.1E-07	-3.6821	7.8E-08	-53.1291
2671	0.5	Extremo 2A	-5.3E-08	70.526	2.1E-07	-3.6821	-2.6E-08	-86.346
2671	1	Extremo 2A	-5.3E-08	78.71	2.1E-07	-3.6821	-1.3E-07	-123.655
2673	0	Extremo 1A	-6.8E-08	-77.012	-2.5E-07	11.1324	-1.6E-07	-121.903
2673	0.5	Extremo 1A	-6.8E-08	-68.828	-2.5E-07	11.1324	-3.3E-08	-85.443
2673	1	Extremo 1A	-6.8E-08	-60.644	-2.5E-07	11.1324	9.4E-08	-53.075
2673	0	Extremo 2A	-6.9E-08	-77.012	-2.5E-07	11.1323	-1.6E-07	-121.903
2673	0.5	Extremo 2A	-6.9E-08	-68.828	-2.5E-07	11.1323	-3.3E-08	-85.4429
2673	1	Extremo 2A	-6.9E-08	-60.644	-2.5E-07	11.1323	9.4E-08	-53.075
2674	0	Extremo 1A	-4.2E-08	68.459	1.6E-07	-0.4606	6.1E-08	-55.0696
2674	0.5	Extremo 1A	-4.2E-08	76.644	1.6E-07	-0.4606	-2.1E-08	-91.3454
2674	1	Extremo 1A	-4.2E-08	84.828	1.6E-07	-0.4606	-1E-07	-131.713
2674	0	Extremo 2A	-4.2E-08	68.459	1.6E-07	-0.4607	6.1E-08	-55.0695
2674	0.5	Extremo 2A	-4.2E-08	76.643	1.6E-07	-0.4607	-2.1E-08	-91.3451
2674	1	Extremo 2A	-4.2E-08	84.828	1.6E-07	-0.4607	-1E-07	-131.713
2676	0	Extremo 1A	-5.4E-08	-84.951	-2E-07	6.7004	-1.2E-07	-133.656
2676	0.5	Extremo 1A	-5.4E-08	-76.767	-2E-07	6.7004	-2.5E-08	-93.2265
2676	1	Extremo 1A	-5.4E-08	-68.583	-2E-07	6.7004	7.4E-08	-56.8891
2676	0	Extremo 2A	-5.4E-08	-84.951	-2E-07	6.7004	-1.2E-07	-133.656
2676	0.5	Extremo 2A	-5.4E-08	-76.767	-2E-07	6.7004	-2.5E-08	-93.2262
2676	1	Extremo 2A	-5.4E-08	-68.582	-2E-07	6.7004	7.4E-08	-56.8889
2677	0	Extremo 1A	-3.3E-08	81.275	1.3E-07	4.7204	4.8E-08	-52.8295
2677	0.5	Extremo 1A	-3.3E-08	89.459	1.3E-07	4.7204	-1.6E-08	-95.513
2677	1	Extremo 1A	-3.3E-08	97.644	1.3E-07	4.7204	-8.1E-08	-142.289
2677	0	Extremo 2A	-3.3E-08	81.274	1.3E-07	4.7201	4.8E-08	-52.8294
2677	0.5	Extremo 2A	-3.3E-08	89.459	1.3E-07	4.7201	-1.6E-08	-95.5126
2677	1	Extremo 2A	-3.3E-08	97.643	1.3E-07	4.7201	-8.1E-08	-142.288
2679	0	Extremo 1A	-4.2E-08	-103.333	-1.6E-07	-2.4768	-9.8E-08	-151.479
2679	0.5	Extremo 1A	-4.2E-08	-95.149	-1.6E-07	-2.4768	-2E-08	-101.859
2679	1	Extremo 1A	-4.2E-08	-86.965	-1.6E-07	-2.4768	5.8E-08	-56.3305
2679	0	Extremo 2A	-4.2E-08	-103.333	-1.6E-07	-2.4765	-9.7E-08	-151.479
2679	0.5	Extremo 2A	-4.2E-08	-95.148	-1.6E-07	-2.4765	-2E-08	-101.858
2679	1	Extremo 2A	-4.2E-08	-86.964	-1.6E-07	-2.4765	5.8E-08	-56.3303
2680	0	Extremo 1A	-2.6E-08	86.948	1E-07	0.0047	3.8E-08	-43.2542
2680	0.5	Extremo 1A	-2.6E-08	95.132	1E-07	0.0047	-1.3E-08	-88.7742
2680	1	Extremo 1A	-2.6E-08	103.316	1E-07	0.0047	-6.4E-08	-138.386
2680	0	Extremo 2A	-2.6E-08	86.947	1E-07	0.0044	3.8E-08	-43.2544
2680	0.5	Extremo 2A	-2.6E-08	95.131	1E-07	0.0044	-1.3E-08	-88.7739
2680	1	Extremo 2A	-2.6E-08	103.316	1E-07	0.0044	-6.4E-08	-138.386
2682	0	Extremo 1A	-3.3E-08	-113.331	-1.2E-07	-0.0043	-7.6E-08	-151.115
2682	0.5	Extremo 1A	-3.3E-08	-105.147	-1.2E-07	-0.0043	-1.6E-08	-96.4954
2682	1	Extremo 1A	-3.3E-08	-96.962	-1.2E-07	-0.0043	4.5E-08	-45.9682
2682	0	Extremo 2A	-3.3E-08	-113.33	-1.2E-07	-0.0041	-7.6E-08	-151.114
2682	0.5	Extremo 2A	-3.3E-08	-105.146	-1.2E-07	-0.0041	-1.5E-08	-96.4951
2682	1	Extremo 2A	-3.3E-08	-96.961	-1.2E-07	-0.0041	4.5E-08	-45.9683
2683	0	Extremo 1A	-2.1E-08	81.275	8E-08	-4.711	3E-08	-52.8295
2683	0.5	Extremo 1A	-2.1E-08	89.459	8E-08	-4.711	-1E-08	-95.513
2683	1	Extremo 1A	-2.1E-08	97.644	8E-08	-4.711	-5E-08	-142.289
2683	0	Extremo 2A	-2.1E-08	81.274	8E-08	-4.7112	3E-08	-52.8294
2683	0.5	Extremo 2A	-2.1E-08	89.459	8E-08	-4.7112	-1E-08	-95.5126
2683	1	Extremo 2A	-2.1E-08	97.643	8E-08	-4.7112	-5E-08	-142.288
2685	0	Extremo 1A	-2.6E-08	-103.333	-9.6E-08	2.4681	-6E-08	-151.479
2685	0.5	Extremo 1A	-2.6E-08	-95.149	-9.6E-08	2.4681	-1.2E-08	-101.859
2685	1	Extremo 1A	-2.6E-08	-86.965	-9.6E-08	2.4681	3.6E-08	-56.3305
2685	0	Extremo 2A	-2.6E-08	-103.333	-9.5E-08	2.4683	-6E-08	-151.479
2685	0.5	Extremo 2A	-2.6E-08	-95.148	-9.5E-08	2.4683	-1.2E-08	-101.858
2685	1	Extremo 2A	-2.6E-08	-86.964	-9.5E-08	2.4683	3.5E-08	-56.3303
2686	0	Extremo 1A	-1.6E-08	68.459	6.3E-08	0.47	2.4E-08	-55.0697
2686	0.5	Extremo 1A	-1.6E-08	76.644	6.3E-08	0.47	-8.1E-09	-91.3454
2686	1	Extremo 1A	-1.6E-08	84.828	6.3E-08	0.47	-4E-08	-131.713
2686	0	Extremo 2A	-1.6E-08	68.459	6.3E-08	0.4696	2.3E-08	-55.0695
2686	0.5	Extremo 2A	-1.6E-08	76.643	6.3E-08	0.4696	-8E-09	-91.3451
2686	1	Extremo 2A	-1.6E-08	84.828	6.3E-08	0.4696	-3.9E-08	-131.713
2688	0	Extremo 1A	-2E-08	-84.951	-7.5E-08	-6.709	-4.7E-08	-133.656
2688	0.5	Extremo 1A	-2E-08	-76.767	-7.5E-08	-6.709	-9.5E-09	-93.2265
2688	1	Extremo 1A	-2E-08	-68.583	-7.5E-08	-6.709	2.8E-08	-56.8891
2688	0	Extremo 2A	-2E-08	-84.951	-7.4E-08	-6.7086	-4.7E-08	-133.656
2688	0.5	Extremo 2A	-2E-08	-76.767	-7.4E-08	-6.7086	-9.4E-09	-93.2262
2688	1	Extremo 2A	-2E-08	-68.582	-7.4E-08	-6.7086	2.8E-08	-56.8889
2689	0	Extremo 1A	-1.3E-08	62.342	5E-08	3.6916	1.8E-08	-53.1292
2689	0.5	Extremo 1A	-1.3E-08	70.526	5E-08	3.6916	-6.4E-09	-86.3462
2689	1	Extremo 1A	-1.3E-08	78.71	5E-08	3.6916	-3.1E-08	-123.655
2689	0	Extremo 2A	-1.3E-08	62.342	4.9E-08	3.691	1.8E-08	-53.1291
2689	0.5	Extremo 2A	-1.3E-08	70.526	4.9E-08	3.691	-6.3E-09	-86.346
2689	1	Extremo 2A	-1.3E-08	78.71	4.9E-08	3.691	-3.1E-08	-123.655
2691	0	Extremo 1A	-1.6E-08	-77.012	-5.9E-08	-11.1411	-3.7E-08	-121.903
2691	0.5	Extremo 1A	-1.6E-08	-68.828	-5.9E-08	-11.1411	-7.4E-09	-85.443
2691	1	Extremo 1A	-1.6E-08	-60.644	-5.9E-08	-11.1411	2.2E-08	-53.0751
2691	0	Extremo 2A	-1.6E-08	-77.012	-5.8E-08	-11.1405	-3.6E-08	-121.903
2691	0.5	Extremo 2A	-1.6E-08	-68.828	-5.8E-08	-11.1405	-7.3E-09	-85.4429
2691	1	Extremo 2A	-1.6E-08	-60.644	-5.8E-08	-11.1405	2.2E-08	-53.075
2692	0	Extremo 1A	-1E-08	60.572	3.9E-08	4.0494	1.4E-08	-51.4241
2692	0.5	Extremo 1A	-1E-08	68.757	3.9E-08	4.0494	-5E-09	-83.7564
2692	1	Extremo 1A	-1E-08	76.941	3.9E-08	4.0494	-2.5E-08	-120.181
2692	0	Extremo 2A	-1E-08	60.572	3.8E-08	4.0488	1.4E-08	-51.424
2692	0.5	Extremo 2A	-1E-08	68.757	3.8E-08	4.0488	-4.9E-09	-83.7564
2692	1	Extremo 2A	-1E-08	76.941	3.8E-08	4.0488	-2.4E-08	-120.181
2694	0	Extremo 1A	-1.2E-08	-74.83	-4.6E-08	-10.8037	-2.9E-08	-116.954
2694	0.5	Extremo 1A	-1.2E-08	-66.645	-4.6E-08	-10.8037	-5.8E-09	-81.5855
2694	1	Extremo 1A	-1.2E-08	-58.461	-4.6E-08	-10.8037	1.7E-08	-50.309
2694	0	Extremo 2A	-1.3E-08	-74.83	-4.5E-08	-10.803	-2.8E-08	-116.954
2694	0.5	Extremo 2A	-1.3E-08	-66.645	-4.5E-08	-10.803	-5.7E-09	-81.5854
2694	1	Extremo 2A	-1.3E-08	-58.461	-4.5E-08	-10.803	1.7E-08	-50.309
2695	0	Extremo 1A	-8E-09	60.35	3.1E-08	3.1118	1.1E-08	-50.6478
2695	0.5	Extremo 1A	-8E-09	68.535	3.1E-08	3.1118	-4E-09	-82.8691
2695	1	Extremo 1A	-8E-09	76.719	3.1E-08	3.1118	-1.9E-08	-119.183
2695	0	Extremo 2A	-8.3E-09	60.35	2.9E-08	3.1112	1.1E-08	-50.6478
2695	0.5	Extremo 2A	-8.3E-09	68.535	2.9E-08	3.1112	-3.8E-09	-82.8691
2695	1	Extremo 2A	-8.3E-09	76.719	2.9E-08	3.1112	-1.9E-08	-119.183
2697	0	Extremo 1A	-9.7E-09	-74.466	-3.6E-08	-8.3052	-2.3E-08	-115.298
2697	0.5	Extremo 1A	-9.7E-09	-66.281	-3.6E-08	-8.3052	-4.5E-09	-80.1112
2697	1	Extremo 1A	-9.7E-09	-58.097	-3.6E-08	-8.3052	1.4E-08	-49.0166
2697	0	Extremo 2A	-1E-08	-74.466	-3.5E-08	-8.3046	-2.2E-08	-115.298

2697	0.5	Extremo 2A	-1E-08	-66.281	-3.5E-08	-8.3046	-4.4E-09	-80.1112
2697	1	Extremo 2A	-1E-08	-58.097	-3.5E-08	-8.3046	1.3E-08	-49.0166
2698	0	Extremo 1A	-6.3E-09	60.469	2.4E-08	1.8574	8.9E-09	-50.407
2698	0.5	Extremo 1A	-6.3E-09	68.654	2.4E-08	1.8574	-3.1E-09	-82.6876
2698	1	Extremo 1A	-6.3E-09	76.838	2.4E-08	1.8574	-1.5E-08	-119.061
2698	0	Extremo 2A	-6.7E-09	60.469	2.3E-08	1.8567	8.3E-09	-50.407
2698	0.5	Extremo 2A	-6.7E-09	68.654	2.3E-08	1.8567	-2.9E-09	-82.6876
2698	1	Extremo 2A	-6.7E-09	76.838	2.3E-08	1.8567	-1.4E-08	-119.061
2700	0	Extremo 1A	-7.6E-09	-74.487	-2.8E-08	-5.0968	-1.8E-08	-114.826
2700	0.5	Extremo 1A	-7.6E-09	-66.303	-2.8E-08	-5.0968	-3.5E-09	-79.6279
2700	1	Extremo 1A	-7.6E-09	-58.119	-2.8E-08	-5.0968	1.1E-08	-48.5225
2700	0	Extremo 2A	-8E-09	-74.487	-2.7E-08	-5.0961	-1.7E-08	-114.826
2700	0.5	Extremo 2A	-8E-09	-66.303	-2.7E-08	-5.0961	-3.3E-09	-79.6279
2700	1	Extremo 2A	-8E-09	-58.119	-2.7E-08	-5.0961	1E-08	-48.5225
2701	0	Extremo 1A	-5E-09	60.567	1.9E-08	0.6086	6.9E-09	-50.3597
2701	0.5	Extremo 1A	-5E-09	68.751	1.9E-08	0.6086	-2.4E-09	-82.6893
2701	1	Extremo 1A	-5E-09	76.936	1.9E-08	0.6086	-1.2E-08	-119.111
2701	0	Extremo 2A	-5.5E-09	60.567	1.7E-08	0.6079	6.2E-09	-50.3597
2701	0.5	Extremo 2A	-5.5E-09	68.751	1.7E-08	0.6079	-2.2E-09	-82.6893
2701	1	Extremo 2A	-5.5E-09	76.936	1.7E-08	0.6079	-1.1E-08	-119.111
2703	0	Extremo 1A	-6E-09	-74.53	-2.2E-08	-1.7076	-1.4E-08	-114.712
2703	0.5	Extremo 1A	-6E-09	-66.345	-2.2E-08	-1.7076	-2.8E-09	-79.4929
2703	1	Extremo 1A	-6E-09	-58.161	-2.2E-08	-1.7076	8.3E-09	-48.3663
2703	0	Extremo 2A	-6.5E-09	-74.53	-2E-08	-1.7069	-1.3E-08	-114.712
2703	0.5	Extremo 2A	-6.5E-09	-66.345	-2E-08	-1.7069	-2.5E-09	-79.4929
2703	1	Extremo 2A	-6.5E-09	-58.161	-2E-08	-1.7069	7.6E-09	-48.3663
2704	0	Extremo 1A	-4E-09	60.567	1.5E-08	-0.6132	5.4E-09	-50.3598
2704	0.5	Extremo 1A	-4E-09	68.751	1.5E-08	-0.6132	-1.9E-09	-82.6893
2704	1	Extremo 1A	-4E-09	76.936	1.5E-08	-0.6132	-9.2E-09	-119.111
2704	0	Extremo 2A	-4.6E-09	60.567	1.2E-08	-0.6139	4.5E-09	-50.3597
2704	0.5	Extremo 2A	-4.6E-09	68.751	1.2E-08	-0.6139	-1.6E-09	-82.6893
2704	1	Extremo 2A	-4.6E-09	76.936	1.2E-08	-0.6139	-7.7E-09	-119.111
2706	0	Extremo 1A	-4.7E-09	-74.53	-1.7E-08	1.7118	-1.1E-08	-114.712
2706	0.5	Extremo 1A	-4.7E-09	-66.345	-1.7E-08	1.7118	-2.1E-09	-79.4929
2706	1	Extremo 1A	-4.7E-09	-58.161	-1.7E-08	1.7118	6.5E-09	-48.3663
2706	0	Extremo 2A	-5.4E-09	-74.53	-1.5E-08	1.7124	-9.2E-09	-114.712
2706	0.5	Extremo 2A	-5.4E-09	-66.345	-1.5E-08	1.7124	-1.8E-09	-79.4929
2706	1	Extremo 2A	-5.4E-09	-58.161	-1.5E-08	1.7124	5.5E-09	-48.3663
2707	0	Extremo 1A	-3.2E-09	60.469	1.1E-08	-1.862	4.1E-09	-50.407
2707	0.5	Extremo 1A	-3.2E-09	68.653	1.1E-08	-1.862	-1.5E-09	-82.6876
2707	1	Extremo 1A	-3.2E-09	76.838	1.1E-08	-1.862	-7.1E-09	-119.061
2707	0	Extremo 2A	-3.9E-09	60.469	8.3E-09	-1.8628	3E-09	-50.407
2707	0.5	Extremo 2A	-3.9E-09	68.653	8.3E-09	-1.8628	-1.1E-09	-82.6876
2707	1	Extremo 2A	-3.9E-09	76.838	8.3E-09	-1.8628	-5.2E-09	-119.061
2709	0	Extremo 1A	-3.7E-09	-74.487	-1.3E-08	5.101	-8.4E-09	-114.825
2709	0.5	Extremo 1A	-3.7E-09	-66.303	-1.3E-08	5.101	-1.7E-09	-79.6279
2709	1	Extremo 1A	-3.7E-09	-58.118	-1.3E-08	5.101	5.1E-09	-48.5226
2709	0	Extremo 2A	-4.6E-09	-74.487	-1E-08	5.1017	-6.3E-09	-114.825
2709	0.5	Extremo 2A	-4.6E-09	-66.303	-1E-08	5.1017	-1.2E-09	-79.6279
2709	1	Extremo 2A	-4.6E-09	-58.118	-1E-08	5.1017	3.8E-09	-48.5226
2710	0	Extremo 1A	-2.6E-09	60.35	8.6E-09	-3.1164	3.1E-09	-50.648
2710	0.5	Extremo 1A	-2.6E-09	68.535	8.6E-09	-3.1164	-1.1E-09	-82.8693
2710	1	Extremo 1A	-2.6E-09	76.719	8.6E-09	-3.1164	-5.4E-09	-119.183
2710	0	Extremo 2A	-3.5E-09	60.35	4.8E-09	-3.1172	1.8E-09	-50.6481
2710	0.5	Extremo 2A	-3.5E-09	68.535	4.8E-09	-3.1172	-6.6E-10	-82.8694
2710	1	Extremo 2A	-3.5E-09	76.719	4.8E-09	-3.1172	-3.1E-09	-119.183
2712	0	Extremo 1A	-3E-09	-74.465	-1E-08	8.3095	-6.5E-09	-115.298
2712	0.5	Extremo 1A	-3E-09	-66.281	-1E-08	8.3095	-1.3E-09	-80.1112
2712	1	Extremo 1A	-3E-09	-58.097	-1E-08	8.3095	3.9E-09	-49.0167
2712	0	Extremo 2A	-4.2E-09	-74.465	-6.2E-09	8.3103	-3.8E-09	-115.298
2712	0.5	Extremo 2A	-4.2E-09	-66.281	-6.2E-09	8.3103	-7.4E-10	-80.1112
2712	1	Extremo 2A	-4.2E-09	-58.097	-6.2E-09	8.3103	2.3E-09	-49.0168
2713	0	Extremo 1A	-2.1E-09	60.573	6.4E-09	-4.0537	2.4E-09	-51.4248
2713	0.5	Extremo 1A	-2.1E-09	68.757	6.4E-09	-4.0537	-8.6E-10	-83.7572
2713	1	Extremo 1A	-2.1E-09	76.941	6.4E-09	-4.0537	-4.1E-09	-120.182
2713	0	Extremo 2A	-3.3E-09	60.573	1.7E-09	-4.0544	5.9E-10	-51.4249
2713	0.5	Extremo 2A	-3.3E-09	68.757	1.7E-09	-4.0544	-2.5E-10	-83.7573
2713	1	Extremo 2A	-3.3E-09	76.941	1.7E-09	-4.0544	-1.1E-09	-120.182
2715	0	Extremo 1A	-2.4E-09	-74.829	-8E-09	10.8079	-5E-09	-116.955
2715	0.5	Extremo 1A	-2.4E-09	-66.645	-8E-09	10.8079	-9.7E-10	-81.5859
2715	1	Extremo 1A	-2.4E-09	-58.461	-8E-09	10.8079	3E-09	-50.3095
2715	0	Extremo 2A	-3.9E-09	-74.829	-2.5E-09	10.8086	-1.5E-09	-116.955
2715	0.5	Extremo 2A	-3.9E-09	-66.645	-2.5E-09	10.8086	-2.8E-10	-81.586
2715	1	Extremo 2A	-3.9E-09	-58.461	-2.5E-09	10.8086	9.8E-10	-50.3096
2716	0	Extremo 1A	-1.7E-09	62.343	4.7E-09	-3.6949	1.7E-09	-53.1308
2716	0.5	Extremo 1A	-1.7E-09	70.527	4.7E-09	-3.6949	-6.4E-10	-86.3483
2716	1	Extremo 1A	-1.7E-09	78.712	4.7E-09	-3.6949	-3E-09	-123.658
2716	0	Extremo 2A	-3.3E-09	62.343	-1.3E-09	-3.6953	-5.4E-10	-53.1312
2716	0.5	Extremo 2A	-3.3E-09	70.527	-1.3E-09	-3.6953	1.4E-10	-86.3488
2716	1	Extremo 2A	-3.3E-09	78.712	-1.3E-09	-3.6953	8.1E-10	-123.659
2718	0	Extremo 1A	-2E-09	-77.013	-6E-09	11.1447	-3.7E-09	-121.905
2718	0.5	Extremo 1A	-2E-09	-68.829	-6E-09	11.1447	-7.2E-10	-85.4447
2718	1	Extremo 1A	-2E-09	-60.644	-6E-09	11.1447	2.3E-09	-53.0765
2718	0	Extremo 2A	-3.9E-09	-77.013	9.8E-10	11.1452	6.5E-10	-121.906
2718	0.5	Extremo 2A	-3.9E-09	-68.829	9.8E-10	11.1452	1.6E-10	-85.4451
2718	1	Extremo 2A	-3.9E-09	-60.644	9.8E-10	11.1452	-3.3E-10	-53.0769
2719	0	Extremo 1A	-1.5E-09	68.463	3.2E-09	-0.4708	1.2E-09	-55.0723
2719	0.5	Extremo 1A	-1.5E-09	76.648	3.2E-09	-0.4708	-4.5E-10	-91.3501
2719	1	Extremo 1A	-1.5E-09	84.832	3.2E-09	-0.4708	-2.1E-09	-131.72
2719	0	Extremo 2A	-3.4E-09	68.464	-4.4E-09	-0.4706	-1.7E-09	-55.0729
2719	0.5	Extremo 2A	-3.4E-09	76.649	-4.4E-09	-0.4706	5.3E-10	-91.3512
2719	1	Extremo 2A	-3.4E-09	84.833	-4.4E-09	-0.4706	2.7E-09	-131.722
2721	0	Extremo 1A	-1.7E-09	-84.955	-4.3E-09	6.7103	-2.7E-09	-133.662
2721	0.5	Extremo 1A	-1.7E-09	-76.77	-4.3E-09	6.7103	-5.1E-10	-93.231
2721	1	Extremo 1A	-1.7E-09	-68.586	-4.3E-09	6.7103	1.7E-09	-56.8918
2721	0	Extremo 2A	-4.1E-09	-84.956	4.6E-09	6.7102	2.9E-09	-133.664
2721	0.5	Extremo 2A	-4.1E-09	-76.771	4.6E-09	6.7102	6.2E-10	-93.2321
2721	1	Extremo 2A	-4.1E-09	-68.587	4.6E-09	6.7102	-1.7E-09	-56.8925
2722	0	Extremo 1A	-1.3E-09	81.285	2E-09	4.7139	6.9E-10	-52.8313
2722	0.5	Extremo 1A	-1.3E-09	89.469	2E-09	4.7139	-2.8E-10	-95.5198
2722	1	Extremo 1A	-1.3E-09	97.654	2E-09	4.7139	-1.3E-09	-142.301
2722	0	Extremo 2A	-3.8E-09	81.287	-7.7E-09	4.715	-2.9E-09	-52.8317
2722	0.5	Extremo 2A	-3.8E-09	89.472	-7.7E-09	4.715	9.5E-10	-95.5214
2722	1	Extremo 2A	-3.8E-09	97.656	-7.7E-09	4.715	4.8E-09	-142.303
2724	0	Extremo 1A	-1.5E-09	-103.344	-2.9E-09	-2.4709	-1.8E-09	-151.492
2724	0.5	Extremo 1A	-1.5E-09	-95.159	-2.9E-09	-2.4709	-3.3E-10	-101.867
2724	1	Extremo 1A	-1.5E-09	-86.975	-2.9E-09	-2.4709	1.1E-09	-56.3329
2724	0	Extremo 2A	-4.5E-09	-103.346	8.4E-09	-2.4719	5.3E-09	-151.495
2724	0.5	Extremo 2A	-4.5E-09	-95.162	8.4E-09	-2.4719	1.1E-09	-101.868
2724	1	Extremo 2A	-4.5E-09	-86.977	8.4E-09	-2.4719	-3.1E-09	-56.3335
2725	0	Extremo 1A	-1.2E-09	86.96	8.2E-10	-0.0025	2.8E-10	-43.2516
2725	0.5	Extremo 1A	-1.2E-09	95.145	8.2E-10	-0.0025	-1.4E-10	-88.7779
2725	1	Extremo 1A	-1.2E-09	103.329	8.2E-10	-0.0025	-5.5E-10	-138.396
2725	0	Extremo 2A	-4.3E-09	86.964	-1.1E-08	-0.0016	-4.3E-09	-43.251
2725	0.5	Extremo 2A	-4.3E-09	95.148	-1.1E-08	-0.0016	1.4E-09	-88.7789
2725	1	Extremo 2A	-4.3E-09	103.332	-1.1E-08	-0.0016	7.2E-09	-138.399
2727	0	Extremo 1A	-1.4E-09	-113.345	-1.6E-09	0.0023	-9.8E-10	-151.127
2727	0.5	Extremo 1A	-1.4E-09	-105.161	-1.6E-09	0.0023	-1.7E-10	-96.5009
2727	1	Extremo 1A	-1.4E-09	-96.976	-1.6E-09	0.0023	6.4E-10	-45.9666
2727	0	Extremo 2A	-5.2E-09	-113.349	1.3E-08	0.0015	8.1E-09	-151.13
2727	0.5	Extremo 2A	-5.2E-09	-105.164	1.3E-08	0.0015	1.7E-09	-96.5022
2727	1	Extremo 2A	-5.2E-09	-96.98	1.3E-08	0.0015	-4.8E-09	-45.9662
2728	0	Extremo 1A	-1.1E-09	81.285	-2.4E-10	-4.7189	-1.2E-10	-52.8313
2728	0.5	Extremo 1A	-1.1E-09	89.469	-2.4E-10	-4.7189	2.3E-12	-95.5198
2728	1	Extremo 1A	-1.1E-09	97.654	-2.4E-10	-4.7189	1.2E-10	-142.301
2728	0	Extremo 2A	-5.1E-09	81.287	-1.6E-08	-4.7182	-5.9E-09	-52.8317
2728	0.5	Extremo 2A	-5.1E-09	89.472	-1.6E-08	-4.7182	2E-09	-95.5214
2728	1	Extremo 2A	-5.1E-09	97.656	-1.6E-08	-4.7182	9.9E-09	-142.303
2730	0	Extremo 1A	-1.3E-09	-103.344	-4.2E-10	2.4755	-2.3E-10	-151.492
2730	0.5	Extremo 1A	-1.3E-09	-95.159	-4.2E-10	2.4755	-2E-11	-101.867
2730	1	Extremo 1A	-1.3E-09	-86.975	-4.2E-10	2.4755	1.9E-10	-56.3329
2730	0	Extremo 2A	-6.3E-09	-103.346	1.8E-08	2.4748	1.1E-08	-151.495
2730	0.5	Extremo 2A	-6.3E-09	-95.162	1.8E-08	2.4748	2.3E-09	-101.868
2730	1	Extremo 2A	-6.3E-09	-86.977	1.8E-08	2.4748	-6.7E-09	-56.3335
2731	0	Extremo 1A	-1.1E-09	68.463	-1.3E-09	0.4658	-5.1E-10	-55.0723
2731	0.5	Extremo 1A	-1.1E-09	76.648	-1.3E-09	0.4658	1.4E-10	-91.3501
2731	1	Extremo 1A	-1.1E-09	84.832	-1.3E-09	0.4658	7.9E-10	-131.72
2731	0	Extremo 2A	-6.2E-09	68.464	-2.1E-08	0.4674	-7.9E-09	-55.0729
2731	0.5	Extremo 2A	-6.2E-09	76.649	-2.1E-08	0.4674	2.6E-09	-91.3512
2731	1	Extremo 2A	-6.2E-09	84.833	-2.1E-08	0.4674	1.3E-08	-131.722
2733	0	Extremo 1A	-1.3E-09	-84.955	7.7E-10	-6.7056	5.2E-10	-133.662
2733	0.5	Extremo 1A	-1.3E-09	-76.77	7.7E-10	-6.7056	1.3E-10	-93.231
2733	1	Extremo 1A	-1.3E-09	-68.586	7.7E-10	-6.7056	-2.6E-10	-56.8918
2733	0	Extremo 2A	-7.7E-09	-84.956	2.4E-08	-6.7073	1.5E-08	-133.664

2733	0.5	Extremo 2A	-7.7E-09	-76.771	2.4E-08	-6.7073	3.1E-09	-93.2321
2733	1	Extremo 2A	-7.7E-09	-68.587	2.4E-08	-6.7073	-9E-09	-56.8925
2734	0	Extremo 1A	-1.2E-09	62.343	-2.4E-09	3.6899	-9.2E-10	-53.1308
2734	0.5	Extremo 1A	-1.2E-09	70.527	-2.4E-09	3.6899	2.8E-10	-86.3483
2734	1	Extremo 1A	-1.2E-09	78.712	-2.4E-09	3.6899	1.5E-09	-123.658
2734	0	Extremo 2A	-7.6E-09	62.343	-2.7E-08	3.6921	-1E-08	-53.1312
2734	0.5	Extremo 2A	-7.6E-09	70.527	-2.7E-08	3.6921	3.4E-09	-86.3488
2734	1	Extremo 2A	-7.6E-09	78.712	-2.7E-08	3.6921	1.7E-08	-123.659
2736	0	Extremo 1A	-1.5E-09	-77.013	2E-09	-11.14	1.3E-09	-121.905
2736	0.5	Extremo 1A	-1.5E-09	-68.829	2E-09	-11.14	2.9E-10	-85.4447
2736	1	Extremo 1A	-1.5E-09	-60.644	2E-09	-11.14	-7.3E-10	-53.0765
2736	0	Extremo 2A	-9.6E-09	-77.013	3.2E-08	-11.1423	2E-08	-121.906
2736	0.5	Extremo 2A	-9.6E-09	-68.829	3.2E-08	-11.1423	4.1E-09	-85.4451
2736	1	Extremo 2A	-9.6E-09	-60.644	3.2E-08	-11.1423	-1.2E-08	-53.0769
2737	0	Extremo 1A	-1.4E-09	60.573	-3.6E-09	4.0487	-1.4E-09	-51.4247
2737	0.5	Extremo 1A	-1.4E-09	68.757	-3.6E-09	4.0487	4.4E-10	-83.7571
2737	1	Extremo 1A	-1.4E-09	76.941	-3.6E-09	4.0487	2.3E-09	-120.182
2737	0	Extremo 2A	-9.5E-09	60.573	-3.5E-08	4.0512	-1.3E-08	-51.4249
2737	0.5	Extremo 2A	-9.5E-09	68.757	-3.5E-08	4.0512	4.4E-09	-83.7573
2737	1	Extremo 2A	-9.5E-09	76.941	-3.5E-08	4.0512	2.2E-08	-120.182
2739	0	Extremo 1A	-1.7E-09	-74.829	3.4E-09	-10.8033	2.2E-09	-116.954
2739	0.5	Extremo 1A	-1.7E-09	-66.645	3.4E-09	-10.8033	4.7E-10	-81.5859
2739	1	Extremo 1A	-1.7E-09	-58.461	3.4E-09	-10.8033	-1.3E-09	-50.3095
2739	0	Extremo 2A	-1.2E-08	-74.829	4.2E-08	-10.8057	2.6E-08	-116.955
2739	0.5	Extremo 2A	-1.2E-08	-66.645	4.2E-08	-10.8057	5.4E-09	-81.586
2739	1	Extremo 2A	-1.2E-08	-58.461	4.2E-08	-10.8057	-1.6E-08	-50.3096
2740	0	Extremo 1A	-1.7E-09	60.35	-5E-09	3.1113	-1.9E-09	-50.648
2740	0.5	Extremo 1A	-1.7E-09	68.535	-5E-09	3.1113	6.2E-10	-82.8693
2740	1	Extremo 1A	-1.7E-09	76.719	-5E-09	3.1113	3.1E-09	-119.183
2740	0	Extremo 2A	-1.2E-08	60.35	-4.5E-08	3.1139	-1.7E-08	-50.6481
2740	0.5	Extremo 2A	-1.2E-08	68.535	-4.5E-08	3.1139	5.6E-09	-82.8693
2740	1	Extremo 2A	-1.2E-08	76.719	-4.5E-08	3.1139	2.8E-08	-119.183
2742	0	Extremo 1A	-2E-09	-74.465	5.1E-09	-8.3049	3.2E-09	-115.298
2742	0.5	Extremo 1A	-2E-09	-66.281	5.1E-09	-8.3049	6.7E-10	-80.1111
2742	1	Extremo 1A	-2E-09	-58.097	5.1E-09	-8.3049	-1.9E-09	-49.0167
2742	0	Extremo 2A	-1.5E-08	-74.465	5.4E-08	-8.3073	3.4E-08	-115.298
2742	0.5	Extremo 2A	-1.5E-08	-66.281	5.4E-08	-8.3073	7E-09	-80.1112
2742	1	Extremo 2A	-1.5E-08	-58.097	5.4E-08	-8.3073	-2E-08	-49.0167
2743	0	Extremo 1A	-2E-09	60.469	-6.7E-09	1.8568	-2.5E-09	-50.407
2743	0.5	Extremo 1A	-2E-09	68.653	-6.7E-09	1.8568	8.4E-10	-82.6876
2743	1	Extremo 1A	-2E-09	76.838	-6.7E-09	1.8568	4.2E-09	-119.06
2743	0	Extremo 2A	-1.5E-08	60.469	-5.8E-08	1.8595	-2.2E-08	-50.407
2743	0.5	Extremo 2A	-1.5E-08	68.653	-5.8E-08	1.8595	7.2E-09	-82.6876
2743	1	Extremo 2A	-1.5E-08	76.838	-5.8E-08	1.8595	3.6E-08	-119.06
2745	0	Extremo 1A	-2.4E-09	-74.487	7E-09	-5.0963	4.4E-09	-114.825
2745	0.5	Extremo 1A	-2.4E-09	-66.303	7E-09	-5.0963	9.2E-10	-79.6278
2745	1	Extremo 1A	-2.4E-09	-58.118	7E-09	-5.0963	-2.6E-09	-48.5225
2745	0	Extremo 2A	-1.9E-08	-74.487	7E-08	-5.0987	4.4E-08	-114.825
2745	0.5	Extremo 2A	-1.9E-08	-66.303	7E-08	-5.0987	9E-09	-79.6278
2745	1	Extremo 2A	-1.9E-08	-58.118	7E-08	-5.0987	-2.6E-08	-48.5225
2746	0	Extremo 1A	-2.4E-09	60.567	-8.8E-09	0.6078	-3.3E-09	-50.3597
2746	0.5	Extremo 1A	-2.4E-09	68.751	-8.8E-09	0.6078	1.1E-09	-82.6892
2746	1	Extremo 1A	-2.4E-09	76.936	-8.8E-09	0.6078	5.5E-09	-119.111
2746	0	Extremo 2A	-1.9E-08	60.567	-7.3E-08	0.6105	-2.8E-08	-50.3597
2746	0.5	Extremo 2A	-1.9E-08	68.751	-7.3E-08	0.6105	9.1E-09	-82.6892
2746	1	Extremo 2A	-1.9E-08	76.936	-7.3E-08	0.6105	4.6E-08	-119.111
2748	0	Extremo 1A	-2.9E-09	-74.53	9.4E-09	-1.7069	5.9E-09	-114.712
2748	0.5	Extremo 1A	-2.9E-09	-66.345	9.4E-09	-1.7069	1.2E-09	-79.4927
2748	1	Extremo 1A	-2.9E-09	-58.161	9.4E-09	-1.7069	-3.5E-09	-48.3662
2748	0	Extremo 2A	-2.5E-08	-74.53	9E-08	-1.7093	5.6E-08	-114.712
2748	0.5	Extremo 2A	-2.5E-08	-66.345	9E-08	-1.7093	1.2E-08	-79.4928
2748	1	Extremo 2A	-2.5E-08	-58.161	9E-08	-1.7093	-3.3E-08	-48.3662
2749	0	Extremo 1A	-3E-09	60.567	-1.1E-08	-0.6141	-4.2E-09	-50.3597
2749	0.5	Extremo 1A	-3E-09	68.751	-1.1E-08	-0.6141	1.4E-09	-82.6891
2749	1	Extremo 1A	-3E-09	76.935	-1.1E-08	-0.6141	7.1E-09	-119.111
2749	0	Extremo 2A	-2.4E-08	60.567	-9.3E-08	-0.6114	-3.5E-08	-50.3597
2749	0.5	Extremo 2A	-2.4E-08	68.751	-9.3E-08	-0.6114	1.1E-08	-82.6892
2749	1	Extremo 2A	-2.4E-08	76.936	-9.3E-08	-0.6114	5.8E-08	-119.111
2751	0	Extremo 1A	-3.7E-09	-74.53	1.2E-08	1.7126	7.8E-09	-114.711
2751	0.5	Extremo 1A	-3.7E-09	-66.345	1.2E-08	1.7126	1.6E-09	-79.4927
2751	1	Extremo 1A	-3.7E-09	-58.161	1.2E-08	1.7126	-4.6E-09	-48.3662
2751	0	Extremo 2A	-3.2E-08	-74.53	1.1E-07	1.7101	7.2E-08	-114.712
2751	0.5	Extremo 2A	-3.2E-08	-66.345	1.1E-07	1.7101	1.5E-08	-79.4928
2751	1	Extremo 2A	-3.2E-08	-58.161	1.1E-07	1.7101	-4.3E-08	-48.3662
2752	0	Extremo 1A	-3.8E-09	60.469	-1.4E-08	-1.8631	-5.4E-09	-50.407
2752	0.5	Extremo 1A	-3.8E-09	68.653	-1.4E-08	-1.8631	1.8E-09	-82.6876
2752	1	Extremo 1A	-3.8E-09	76.838	-1.4E-08	-1.8631	9E-09	-119.06
2752	0	Extremo 2A	-3E-08	60.469	-1.2E-07	-1.8603	-4.5E-08	-50.407
2752	0.5	Extremo 2A	-3E-08	68.653	-1.2E-07	-1.8603	1.4E-08	-82.6876
2752	1	Extremo 2A	-3E-08	76.838	-1.2E-07	-1.8603	7.3E-08	-119.06
2754	0	Extremo 1A	-4.6E-09	-74.487	1.6E-08	5.1021	1E-08	-114.825
2754	0.5	Extremo 1A	-4.6E-09	-66.303	1.6E-08	5.1021	2.1E-09	-79.6277
2754	1	Extremo 1A	-4.6E-09	-58.118	1.6E-08	5.1021	-6E-09	-48.5225
2754	0	Extremo 2A	-4E-08	-74.487	1.5E-07	5.0995	9.3E-08	-114.825
2754	0.5	Extremo 2A	-4E-08	-66.303	1.5E-07	5.0995	1.9E-08	-79.6278
2754	1	Extremo 2A	-4E-08	-58.118	1.5E-07	5.0995	-5.4E-08	-48.5225
2755	0	Extremo 1A	-4.7E-09	60.35	-1.8E-08	-3.1176	-6.9E-09	-50.6483
2755	0.5	Extremo 1A	-4.7E-09	68.535	-1.8E-08	-3.1176	2.3E-09	-82.8695
2755	1	Extremo 1A	-4.7E-09	76.719	-1.8E-08	-3.1176	1.2E-08	-119.183
2755	0	Extremo 2A	-3.8E-08	60.35	-1.5E-07	-3.1148	-5.7E-08	-50.6481
2755	0.5	Extremo 2A	-3.8E-08	68.535	-1.5E-07	-3.1148	1.8E-08	-82.8694
2755	1	Extremo 2A	-3.8E-08	76.719	-1.5E-07	-3.1148	9.3E-08	-119.183
2757	0	Extremo 1A	-5.9E-09	-74.465	2.1E-08	8.3108	1.3E-08	-115.298
2757	0.5	Extremo 1A	-5.9E-09	-66.281	2.1E-08	8.3108	2.7E-09	-80.1112
2757	1	Extremo 1A	-5.9E-09	-58.096	2.1E-08	8.3108	-7.8E-09	-49.0169
2757	0	Extremo 2A	-5.1E-08	-74.465	1.9E-07	8.3081	1.2E-07	-115.298
2757	0.5	Extremo 2A	-5.1E-08	-66.281	1.9E-07	8.3081	2.5E-08	-80.1112
2757	1	Extremo 2A	-5.1E-08	-58.097	1.9E-07	8.3081	-7E-08	-49.0168
2758	0	Extremo 1A	-6E-09	60.573	-2.3E-08	-4.0546	-8.7E-09	-51.4257
2758	0.5	Extremo 1A	-6E-09	68.757	-2.3E-08	-4.0546	2.9E-09	-83.7581
2758	1	Extremo 1A	-6E-09	76.941	-2.3E-08	-4.0546	1.5E-08	-120.183
2758	0	Extremo 2A	-4.7E-08	60.573	-1.9E-07	-4.052	-7.2E-08	-51.425
2758	0.5	Extremo 2A	-4.7E-08	68.757	-1.9E-07	-4.052	2.3E-08	-83.7575
2758	1	Extremo 2A	-4.7E-08	76.941	-1.9E-07	-4.052	1.2E-07	-120.182
2760	0	Extremo 1A	-7.5E-09	-74.829	2.7E-08	10.8091	1.7E-08	-116.955
2760	0.5	Extremo 1A	-7.5E-09	-66.645	2.7E-08	10.8091	3.5E-09	-81.5864
2760	1	Extremo 1A	-7.5E-09	-58.46	2.7E-08	10.8091	-1E-08	-50.3102
2760	0	Extremo 2A	-6.6E-08	-74.829	2.4E-07	10.8065	1.5E-07	-116.955
2760	0.5	Extremo 2A	-6.6E-08	-66.645	2.4E-07	10.8065	3.2E-08	-81.586
2760	1	Extremo 2A	-6.6E-08	-58.46	2.4E-07	10.8065	-8.9E-08	-50.3097
2761	0	Extremo 1A	-7.6E-09	62.344	-3E-08	-3.6944	-1.1E-08	-53.133
2761	0.5	Extremo 1A	-7.6E-09	70.529	-3E-08	-3.6944	3.7E-09	-86.3512
2761	1	Extremo 1A	-7.6E-09	78.713	-3E-08	-3.6944	1.9E-08	-123.662
2761	0	Extremo 2A	-6E-08	62.343	-2.4E-07	-3.6928	-9.1E-08	-53.1315
2761	0.5	Extremo 2A	-6E-08	70.528	-2.4E-07	-3.6928	2.9E-08	-86.3492
2761	1	Extremo 2A	-6E-08	78.712	-2.4E-07	-3.6928	1.5E-07	-123.659
2763	0	Extremo 1A	-9.5E-09	-77.014	3.5E-08	11.1449	2.2E-08	-121.908
2763	0.5	Extremo 1A	-9.5E-09	-68.829	3.5E-08	11.1449	4.4E-09	-85.447
2763	1	Extremo 1A	-9.5E-09	-60.645	3.5E-08	11.1449	-1.3E-08	-53.0785
2763	0	Extremo 2A	-8.4E-08	-77.013	3.1E-07	11.143	1.9E-07	-121.906
2763	0.5	Extremo 2A	-8.4E-08	-68.829	3.1E-07	11.143	4.1E-08	-85.4454
2763	1	Extremo 2A	-8.4E-08	-60.644	3.1E-07	11.143	-1.1E-07	-53.0771
2764	0	Extremo 1A	-9.5E-09	68.469	-3.8E-08	-0.4668	-1.4E-08	-55.0759
2764	0.5	Extremo 1A	-9.5E-09	76.653	-3.8E-08	-0.4668	4.7E-09	-91.3564
2764	1	Extremo 1A	-9.5E-09	84.838	-3.8E-08	-0.4668	2.3E-08	-131.729
2764	0	Extremo 2A	-7.5E-08	68.465	-3E-07	-0.4675	-1.2E-07	-55.0734
2764	0.5	Extremo 2A	-7.5E-08	76.65	-3E-07	-0.4675	3.6E-08	-91.3521
2764	1	Extremo 2A	-7.5E-08	84.834	-3E-07	-0.4675	1.9E-07	-131.723
2766	0	Extremo 1A	-1.2E-08	-84.959	4.4E-08	6.7073	2.8E-08	-133.671
2766	0.5	Extremo 1A	-1.2E-08	-76.775	4.4E-08	6.7073	5.7E-09	-93.2371
2766	1	Extremo 1A	-1.2E-08	-68.591	4.4E-08	6.7073	-1.6E-08	-56.8956
2766	0	Extremo 2A	-1.1E-07	-84.956	3.9E-07	6.7076	2.5E-07	-133.665
2766	0.5	Extremo 2A	-1.1E-07	-76.772	3.9E-07	6.7076	5.2E-08	-93.2329
2766	1	Extremo 2A	-1.1E-07	-68.588	3.9E-07	6.7076	-1.5E-07	-56.893
2767	0	Extremo 1A	-1.2E-08	81.298	-4.8E-08	4.7228	-1.8E-08	-52.8336
2767	0.5	Extremo 1A	-1.2E-08	89.483	-4.8E-08	4.7228	5.9E-09	-95.529
2767	1	Extremo 1A	-1.2E-08	97.667	-4.8E-08	4.7228	3E-08	-142.317
2767	0	Extremo 2A	-9.5E-08	81.289	-3.8E-07	4.7188	-1.5E-07	-52.832
2767	0.5	Extremo 2A	-9.5E-08	89.474	-3.8E-07	4.7188	4.5E-08	-95.5227
2767	1	Extremo 2A	-9.5E-08	97.658	-3.8E-07	4.7188	2.4E-07	-142.306
2769	0	Extremo 1A	-1.5E-08	-103.358	5.7E-08	-2.4792	3.6E-08	-151.51
2769	0.5	Extremo 1A	-1.5E-08	-95.173	5.7E-08	-2.4792	7.3E-09	-101.877
2769	1	Extremo 1A	-1.5E-08	-86.989	5.7E-08	-2.4792	-2.1E-08	-56.3363
2769	0	Extremo 2A	-1.4E-07	-103.348	5.1E-07	-2.4753	3.2E-07	-151.498

2769	0.5	Extremo 2A	-1.4E-07	-95.164	5.1E-07	-2.4753	6.7E-08	-101.87
2769	1	Extremo 2A	-1.4E-07	-86.979	5.1E-07	-2.4753	-1.9E-07	-56.334
2770	0	Extremo 1A	-1.5E-08	86.978	-6E-08	0.0055	-2.3E-08	-43.2482
2770	0.5	Extremo 1A	-1.5E-08	95.162	-6E-08	0.0055	7.5E-09	-88.7831
2770	1	Extremo 1A	-1.5E-08	103.346	-6E-08	0.0055	3.8E-08	-138.41
2770	0	Extremo 2A	-1.2E-07	86.966	-4.8E-07	0.0021	-1.8E-07	-43.2506
2770	0.5	Extremo 2A	-1.2E-07	95.15	-4.8E-07	0.0021	5.6E-08	-88.7796
2770	1	Extremo 2A	-1.2E-07	103.335	-4.8E-07	0.0021	3E-07	-138.401
2772	0	Extremo 1A	-2E-08	-113.364	7.3E-08	-0.0051	4.6E-08	-151.145
2772	0.5	Extremo 1A	-2E-08	-105.18	7.3E-08	-0.0051	9.4E-09	-96.5084
2772	1	Extremo 1A	-2E-08	-96.996	7.3E-08	-0.0051	-2.7E-08	-45.9644
2772	0	Extremo 2A	-1.8E-07	-113.351	6.5E-07	-0.0018	4.1E-07	-151.133
2772	0.5	Extremo 2A	-1.8E-07	-105.167	6.5E-07	-0.0018	8.6E-08	-96.5032
2772	1	Extremo 2A	-1.8E-07	-96.982	6.5E-07	-0.0018	-2.4E-07	-45.9659
2773	0	Extremo 1A	-1.9E-08	81.299	-7.6E-08	-4.7119	-2.9E-08	-52.8336
2773	0.5	Extremo 1A	-1.9E-08	89.483	-7.6E-08	-4.7119	9.5E-09	-95.529
2773	1	Extremo 1A	-1.9E-08	97.667	-7.6E-08	-4.7119	4.8E-08	-142.317
2773	0	Extremo 2A	-1.5E-07	81.289	-6.1E-07	-4.7146	-2.3E-07	-52.832
2773	0.5	Extremo 2A	-1.5E-07	89.474	-6.1E-07	-4.7146	7E-08	-95.5227
2773	1	Extremo 2A	-1.5E-07	97.658	-6.1E-07	-4.7146	3.7E-07	-142.306
2775	0	Extremo 1A	-2.5E-08	-103.358	9.3E-08	2.4691	5.8E-08	-151.51
2775	0.5	Extremo 1A	-2.5E-08	-95.173	9.3E-08	2.4691	1.2E-08	-101.877
2775	1	Extremo 1A	-2.5E-08	-86.989	9.3E-08	2.4691	-3.4E-08	-56.3363
2775	0	Extremo 2A	-2.3E-07	-103.348	8.3E-07	2.4718	5.3E-07	-151.498
2775	0.5	Extremo 2A	-2.3E-07	-95.164	8.3E-07	2.4718	1.1E-07	-101.87
2775	1	Extremo 2A	-2.3E-07	-86.979	8.3E-07	2.4718	-3E-07	-56.334
2776	0	Extremo 1A	-2.4E-08	68.469	-9.7E-08	0.4778	-3.6E-08	-55.0759
2776	0.5	Extremo 1A	-2.4E-08	76.653	-9.7E-08	0.4778	1.2E-08	-91.3564
2776	1	Extremo 1A	-2.4E-08	84.838	-9.7E-08	0.4778	6E-08	-131.729
2776	0	Extremo 2A	-1.9E-07	68.465	-7.7E-07	0.4717	-3E-07	-55.0735
2776	0.5	Extremo 2A	-1.9E-07	76.65	-7.7E-07	0.4717	8.8E-08	-91.3521
2776	1	Extremo 2A	-1.9E-07	84.834	-7.7E-07	0.4717	4.7E-07	-131.723
2778	0	Extremo 1A	-3.2E-08	-84.959	1.2E-07	-6.7175	7.5E-08	-133.671
2778	0.5	Extremo 1A	-3.2E-08	-76.775	1.2E-07	-6.7175	1.5E-08	-93.2371
2778	1	Extremo 1A	-3.2E-08	-68.591	1.2E-07	-6.7175	-4.4E-08	-56.8957
2778	0	Extremo 2A	-2.9E-07	-84.956	1.1E-06	-6.7111	6.7E-07	-133.665
2778	0.5	Extremo 2A	-2.9E-07	-76.772	1.1E-06	-6.7111	1.4E-07	-93.2329
2778	1	Extremo 2A	-2.9E-07	-68.588	1.1E-06	-6.7111	-3.9E-07	-56.893
2779	0	Extremo 1A	-3.1E-08	62.344	-1.2E-07	3.7054	-4.6E-08	-53.133
2779	0.5	Extremo 1A	-3.1E-08	70.529	-1.2E-07	3.7054	1.5E-08	-86.3513
2779	1	Extremo 1A	-3.1E-08	78.713	-1.2E-07	3.7054	7.6E-08	-123.662
2779	0	Extremo 2A	-2.4E-07	62.343	-9.7E-07	3.697	-3.7E-07	-53.1315
2779	0.5	Extremo 2A	-2.4E-07	70.528	-9.7E-07	3.697	1.1E-07	-86.3493
2779	1	Extremo 2A	-2.4E-07	78.712	-9.7E-07	3.697	5.9E-07	-123.659
2781	0	Extremo 1A	-4.1E-08	-77.014	1.5E-07	-11.1551	9.6E-08	-121.908
2781	0.5	Extremo 1A	-4.1E-08	-68.829	1.5E-07	-11.1551	2E-08	-85.4471
2781	1	Extremo 1A	-4.1E-08	-60.645	1.5E-07	-11.1551	-5.6E-08	-53.0785
2781	0	Extremo 2A	-3.8E-07	-77.013	1.4E-06	-11.1465	8.6E-07	-121.906
2781	0.5	Extremo 2A	-3.8E-07	-68.829	1.4E-06	-11.1465	1.8E-07	-85.4454
2781	1	Extremo 2A	-3.8E-07	-60.644	1.4E-06	-11.1465	-5E-07	-53.0771
2782	0	Extremo 1A	-3.9E-08	60.573	-1.5E-07	4.0657	-5.8E-08	-51.4257
2782	0.5	Extremo 1A	-3.9E-08	68.757	-1.5E-07	4.0657	1.9E-08	-83.7582
2782	1	Extremo 1A	-3.9E-08	76.942	-1.5E-07	4.0657	9.6E-08	-120.183
2782	0	Extremo 2A	-3E-07	60.573	-1.2E-06	4.0562	-4.7E-07	-51.4251
2782	0.5	Extremo 2A	-3E-07	68.757	-1.2E-06	4.0562	1.4E-07	-83.7575
2782	1	Extremo 2A	-3E-07	76.941	-1.2E-06	4.0562	7.4E-07	-120.182
2784	0	Extremo 1A	-5.3E-08	-74.829	1.9E-07	-10.8194	1.2E-07	-116.955
2784	0.5	Extremo 1A	-5.3E-08	-66.645	1.9E-07	-10.8194	2.5E-08	-81.5865
2784	1	Extremo 1A	-5.3E-08	-58.46	1.9E-07	-10.8194	-7.2E-08	-50.3102
2784	0	Extremo 2A	-4.8E-07	-74.829	1.7E-06	-10.8101	1.1E-06	-116.955
2784	0.5	Extremo 2A	-4.8E-07	-66.645	1.7E-06	-10.8101	2.4E-07	-81.5861
2784	1	Extremo 2A	-4.8E-07	-58.461	1.7E-06	-10.8101	-6.3E-07	-50.3097
2785	0	Extremo 1A	-4.9E-08	60.35	-2E-07	3.1287	-7.4E-08	-50.6484
2785	0.5	Extremo 1A	-4.9E-08	68.535	-2E-07	3.1287	2.4E-08	-82.8697
2785	1	Extremo 1A	-4.9E-08	76.719	-2E-07	3.1287	1.2E-07	-119.183
2785	0	Extremo 2A	-3.7E-07	60.35	-1.5E-06	3.119	-6E-07	-50.6481
2785	0.5	Extremo 2A	-3.7E-07	68.535	-1.5E-06	3.119	1.7E-07	-82.8694
2785	1	Extremo 2A	-3.7E-07	76.719	-1.5E-06	3.119	9.4E-07	-119.183
2787	0	Extremo 1A	-6.8E-08	-74.465	2.5E-07	-8.3211	1.6E-07	-115.298
2787	0.5	Extremo 1A	-6.8E-08	-66.281	2.5E-07	-8.3211	3.3E-08	-80.1113
2787	1	Extremo 1A	-6.8E-08	-58.096	2.5E-07	-8.3211	-9.2E-08	-49.0169
2787	0	Extremo 2A	-6.2E-07	-74.465	2.2E-06	-8.3117	1.4E-06	-115.298
2787	0.5	Extremo 2A	-6.2E-07	-66.281	2.2E-06	-8.3117	3.1E-07	-80.1112
2787	1	Extremo 2A	-6.2E-07	-58.097	2.2E-06	-8.3117	-8.1E-07	-49.0168
2788	0	Extremo 1A	-6.2E-08	60.469	-2.5E-07	1.8744	-9.4E-08	-50.4072
2788	0.5	Extremo 1A	-6.2E-08	68.653	-2.5E-07	1.8744	3E-08	-82.6878
2788	1	Extremo 1A	-6.2E-08	76.838	-2.5E-07	1.8744	1.5E-07	-119.061
2788	0	Extremo 2A	-4.6E-07	60.469	-1.9E-06	1.8646	-7.5E-07	-50.407
2788	0.5	Extremo 2A	-4.6E-07	68.653	-1.9E-06	1.8646	2.1E-07	-82.6877
2788	1	Extremo 2A	-4.6E-07	76.838	-1.9E-06	1.8646	1.2E-06	-119.061
2790	0	Extremo 1A	-8.7E-08	-74.487	3.2E-07	-5.1125	2E-07	-114.825
2790	0.5	Extremo 1A	-8.7E-08	-66.303	3.2E-07	-5.1125	4.2E-08	-79.6279
2790	1	Extremo 1A	-8.7E-08	-58.118	3.2E-07	-5.1125	-1.2E-07	-48.5226
2790	0	Extremo 2A	-8E-07	-74.487	2.9E-06	-5.1031	1.8E-06	-114.825
2790	0.5	Extremo 2A	-8E-07	-66.303	2.9E-06	-5.1031	3.9E-07	-79.6279
2790	1	Extremo 2A	-8E-07	-58.118	2.9E-06	-5.1031	-1E-06	-48.5226
2791	0	Extremo 1A	-7.8E-08	60.567	-3.1E-07	0.6257	-1.2E-07	-50.3599
2791	0.5	Extremo 1A	-7.8E-08	68.751	-3.1E-07	0.6257	3.7E-08	-82.6894
2791	1	Extremo 1A	-7.8E-08	76.936	-3.1E-07	0.6257	1.9E-07	-119.111
2791	0	Extremo 2A	-5.8E-07	60.567	-2.4E-06	0.6158	-9.5E-07	-50.3597
2791	0.5	Extremo 2A	-5.8E-07	68.751	-2.4E-06	0.6158	2.6E-07	-82.6893
2791	1	Extremo 2A	-5.8E-07	76.936	-2.4E-06	0.6158	1.5E-06	-119.111
2793	0	Extremo 1A	-1.1E-07	-74.53	4.1E-07	-1.7233	2.6E-07	-114.712
2793	0.5	Extremo 1A	-1.1E-07	-66.345	4.1E-07	-1.7233	5.4E-08	-79.493
2793	1	Extremo 1A	-1.1E-07	-58.161	4.1E-07	-1.7233	-1.5E-07	-48.3664
2793	0	Extremo 2A	-1E-06	-74.53	3.7E-06	-1.7139	2.3E-06	-114.712
2793	0.5	Extremo 2A	-1E-06	-66.345	3.7E-06	-1.7139	5.1E-07	-79.4929
2793	1	Extremo 2A	-1E-06	-58.161	3.7E-06	-1.7139	-1.3E-06	-48.3663
2794	0	Extremo 1A	-9.8E-08	60.567	-3.9E-07	-0.5959	-1.5E-07	-50.3598
2794	0.5	Extremo 1A	-9.8E-08	68.752	-3.9E-07	-0.5959	4.7E-08	-82.6895
2794	1	Extremo 1A	-9.8E-08	76.936	-3.9E-07	-0.5959	2.4E-07	-119.111
2794	0	Extremo 2A	-7.2E-07	60.567	-3E-06	-0.606	-1.2E-06	-50.3597
2794	0.5	Extremo 2A	-7.2E-07	68.751	-3E-06	-0.606	3.2E-07	-82.6893
2794	1	Extremo 2A	-7.2E-07	76.936	-3E-06	-0.606	1.8E-06	-119.111
2796	0	Extremo 1A	-1.4E-07	-74.53	5.2E-07	1.6959	3.3E-07	-114.712
2796	0.5	Extremo 1A	-1.4E-07	-66.346	5.2E-07	1.6959	6.9E-08	-79.4932
2796	1	Extremo 1A	-1.4E-07	-58.161	5.2E-07	1.6959	-1.9E-07	-48.3664
2796	0	Extremo 2A	-1.3E-06	-74.53	4.7E-06	1.7054	3E-06	-114.712
2796	0.5	Extremo 2A	-1.3E-06	-66.345	4.7E-06	1.7054	6.6E-07	-79.493
2796	1	Extremo 2A	-1.3E-06	-58.161	4.7E-06	1.7054	-1.7E-06	-48.3663
2797	0	Extremo 1A	-1.2E-07	60.47	-5E-07	-1.8445	-1.9E-07	-50.4068
2797	0.5	Extremo 1A	-1.2E-07	68.654	-5E-07	-1.8445	5.9E-08	-82.6877
2797	1	Extremo 1A	-1.2E-07	76.838	-5E-07	-1.8445	3.1E-07	-119.061
2797	0	Extremo 2A	-9E-07	60.469	-3.8E-06	-1.8549	-1.5E-06	-50.4069
2797	0.5	Extremo 2A	-9E-07	68.654	-3.8E-06	-1.8549	3.9E-07	-82.6875
2797	1	Extremo 2A	-9E-07	76.838	-3.8E-06	-1.8549	2.3E-06	-119.06
2799	0	Extremo 1A	-1.8E-07	-74.488	6.7E-07	5.0847	4.2E-07	-114.826
2799	0.5	Extremo 1A	-1.8E-07	-66.304	6.7E-07	5.0847	8.9E-08	-79.6282
2799	1	Extremo 1A	-1.8E-07	-58.119	6.7E-07	5.0847	-2.4E-07	-48.5226
2799	0	Extremo 2A	-1.7E-06	-74.487	6.1E-06	5.0946	3.9E-06	-114.826
2799	0.5	Extremo 2A	-1.7E-06	-66.303	6.1E-06	5.0946	8.5E-07	-79.6281
2799	1	Extremo 2A	-1.7E-06	-58.119	6.1E-06	5.0946	-2.2E-06	-48.5226
2800	0	Extremo 1A	-1.6E-07	60.351	-6.3E-07	-3.0988	-2.4E-07	-50.6469
2800	0.5	Extremo 1A	-1.6E-07	68.535	-6.3E-07	-3.0988	7.3E-08	-82.8685
2800	1	Extremo 1A	-1.6E-07	76.72	-6.3E-07	-3.0988	3.9E-07	-119.182
2800	0	Extremo 2A	-1.1E-06	60.35	-4.8E-06	-3.1094	-1.9E-06	-50.6475
2800	0.5	Extremo 2A	-1.1E-06	68.535	-4.8E-06	-3.1094	4.8E-07	-82.8689
2800	1	Extremo 2A	-1.1E-06	76.719	-4.8E-06	-3.1094	2.9E-06	-119.182
2802	0	Extremo 1A	-2.3E-07	-74.467	8.5E-07	8.2927	5.4E-07	-115.298
2802	0.5	Extremo 1A	-2.3E-07	-66.282	8.5E-07	8.2927	1.1E-07	-80.1111
2802	1	Extremo 1A	-2.3E-07	-58.098	8.5E-07	8.2927	-3.1E-07	-49.0161
2802	0	Extremo 2A	-2.2E-06	-74.466	7.8E-06	8.3028	5E-06	-115.298
2802	0.5	Extremo 2A	-2.2E-06	-66.281	7.8E-06	8.3028	1.1E-06	-80.1113
2802	1	Extremo 2A	-2.2E-06	-58.097	7.8E-06	8.3028	-2.8E-06	-49.0166
2803	0	Extremo 1A	-2E-07	60.572	-7.9E-07	-4.0373	-3.1E-07	-51.4213
2803	0.5	Extremo 1A	-2E-07	68.756	-7.9E-07	-4.0373	9.1E-08	-83.7534
2803	1	Extremo 1A	-2E-07	76.941	-7.9E-07	-4.0373	4.9E-07	-120.178
2803	0	Extremo 2A	-1.4E-06	60.572	-6E-06	-4.0473	-2.4E-06	-51.4235
2803	0.5	Extremo 2A	-1.4E-06	68.757	-6E-06	-4.0473	5.8E-07	-83.7557
2803	1	Extremo 2A	-1.4E-06	76.941	-6E-06	-4.0473	3.6E-06	-120.18
2805	0	Extremo 1A	-3E-07	-74.83	1.1E-06	10.7914	6.9E-07	-116.953
2805	0.5	Extremo 1A	-3E-07	-66.646	1.1E-06	10.7914	1.5E-07	-81.5837
2805	1	Extremo 1A	-3E-07	-58.461	1.1E-06	10.7914	-4E-07	-50.3069
2805	0	Extremo 2A	-2.8E-06	-74.83	0.00001	10.8012	6.4E-06	-116.954

2805	0.5	Extremo 2A	-2.8E-06	-66.645	0.00001	10.8012	1.4E-06	-81.5854
2805	1	Extremo 2A	-2.8E-06	-58.461	0.00001	10.8012	-3.6E-06	-50.3088
2806	0	Extremo 1A	-2.5E-07	62.337	-1E-06	-3.6837	-3.9E-07	-53.1226
2806	0.5	Extremo 1A	-2.5E-07	70.522	-1E-06	-3.6837	1.1E-07	-86.3374
2806	1	Extremo 1A	-2.5E-07	78.706	-1E-06	-3.6837	6.1E-07	-123.644
2806	0	Extremo 2A	-1.7E-06	62.341	-7.5E-06	-3.6904	-3E-06	-53.1279
2806	0.5	Extremo 2A	-1.7E-06	70.525	-7.5E-06	-3.6904	7.1E-07	-86.3444
2806	1	Extremo 2A	-1.7E-06	78.709	-7.5E-06	-3.6904	4.4E-06	-123.653
2808	0	Extremo 1A	-3.9E-07	-77.01	1.4E-06	11.1319	8.9E-07	-121.895
2808	0.5	Extremo 1A	-3.9E-07	-68.826	1.4E-06	11.1319	1.9E-07	-85.4358
2808	1	Extremo 1A	-3.9E-07	-60.641	1.4E-06	11.1319	-5.1E-07	-53.069
2808	0	Extremo 2A	-3.6E-06	-77.012	1.3E-05	11.1388	8.3E-06	-121.902
2808	0.5	Extremo 2A	-3.6E-06	-68.828	1.3E-05	11.1388	1.8E-06	-85.4423
2808	1	Extremo 2A	-3.6E-06	-60.644	1.3E-05	11.1388	-4.6E-06	-53.0744
2809	0	Extremo 1A	-3.1E-07	68.442	-1.3E-06	-0.4725	-4.9E-07	-55.0588
2809	0.5	Extremo 1A	-3.1E-07	76.627	-1.3E-06	-0.4725	1.4E-07	-91.3261
2809	1	Extremo 1A	-3.1E-07	84.811	-1.3E-06	-0.4725	7.7E-07	-131.686
2809	0	Extremo 2A	-2.1E-06	68.456	-9.3E-06	-0.4709	-3.8E-06	-55.0676
2809	0.5	Extremo 2A	-2.1E-06	76.641	-9.3E-06	-0.4709	8.5E-07	-91.3418
2809	1	Extremo 2A	-2.1E-06	84.825	-9.3E-06	-0.4709	5.5E-06	-131.708
2811	0	Extremo 1A	-5E-07	-84.937	1.8E-06	6.7096	1.1E-06	-133.63
2811	0.5	Extremo 1A	-5E-07	-76.753	1.8E-06	6.7096	2.4E-07	-93.2076
2811	1	Extremo 1A	-5E-07	-68.568	1.8E-06	6.7096	-6.5E-07	-56.8774
2811	0	Extremo 2A	-4.7E-06	-84.95	1.7E-05	6.7078	1.1E-05	-133.653
2811	0.5	Extremo 2A	-4.7E-06	-76.765	1.7E-05	6.7078	2.4E-06	-93.2242
2811	1	Extremo 2A	-4.7E-06	-68.581	1.7E-05	6.7078	-5.9E-06	-56.8877
2812	0	Extremo 1A	-3.9E-07	81.233	-1.6E-06	4.6934	-6.2E-07	-52.8224
2812	0.5	Extremo 1A	-3.9E-07	89.417	-1.6E-06	4.6934	1.8E-07	-95.485
2812	1	Extremo 1A	-3.9E-07	97.602	-1.6E-06	4.6934	9.7E-07	-142.24
2812	0	Extremo 2A	-2.6E-06	81.268	-1.2E-05	4.7072	-4.8E-06	-52.828
2812	0.5	Extremo 2A	-2.6E-06	89.452	-1.2E-05	4.7072	1E-06	-95.5079
2812	1	Extremo 2A	-2.6E-06	97.636	-1.2E-05	4.7072	6.8E-06	-142.28
2814	0	Extremo 1A	-6.4E-07	-103.29	2.3E-06	-2.4509	1.5E-06	-151.426
2814	0.5	Extremo 1A	-6.4E-07	-95.105	2.3E-06	-2.4509	3.1E-07	-101.827
2814	1	Extremo 1A	-6.4E-07	-86.921	2.3E-06	-2.4509	-8.4E-07	-56.3202
2814	0	Extremo 2A	-6E-06	-103.327	2.1E-05	-2.4675	1.4E-05	-151.472
2814	0.5	Extremo 2A	-6E-06	-95.143	2.1E-05	-2.4675	3.1E-06	-101.855
2814	1	Extremo 2A	-6E-06	-86.959	2.1E-05	-2.4675	-7.6E-06	-56.3294
2815	0	Extremo 1A	-4.8E-07	86.895	-2E-06	-0.0193	-7.8E-07	-43.2649
2815	0.5	Extremo 1A	-4.8E-07	95.079	-2E-06	-0.0193	2.2E-07	-88.7585
2815	1	Extremo 1A	-4.8E-07	103.264	-2E-06	-0.0193	1.2E-06	-138.344
2815	0	Extremo 2A	-3.2E-06	86.939	-1.4E-05	-0.0086	-6E-06	-43.2555
2815	0.5	Extremo 2A	-3.2E-06	95.123	-1.4E-05	-0.0086	1.2E-06	-88.771
2815	1	Extremo 2A	-3.2E-06	103.307	-1.4E-05	-0.0086	8.4E-06	-138.379
2817	0	Extremo 1A	-8.2E-07	-113.271	2.9E-06	0.0187	1.9E-06	-151.062
2817	0.5	Extremo 1A	-8.2E-07	-105.087	2.9E-06	0.0187	4E-07	-96.4724
2817	1	Extremo 1A	-8.2E-07	-96.903	2.9E-06	0.0187	-1.1E-06	-45.9749
2817	0	Extremo 2A	-7.8E-06	-113.323	2.7E-05	0.004	1.8E-05	-151.108
2817	0.5	Extremo 2A	-7.8E-06	-105.138	2.7E-05	0.004	4E-06	-96.4927
2817	1	Extremo 2A	-7.8E-06	-96.954	2.7E-05	0.004	-9.7E-06	-45.9696
2818	0	Extremo 1A	-6E-07	81.233	-2.5E-06	-4.7321	-9.8E-07	-52.8223
2818	0.5	Extremo 1A	-6E-07	89.417	-2.5E-06	-4.7321	2.7E-07	-95.4849
2818	1	Extremo 1A	-6E-07	97.602	-2.5E-06	-4.7321	1.5E-06	-142.24
2818	0	Extremo 2A	-3.9E-06	81.268	-1.8E-05	-4.7243	-7.5E-06	-52.828
2818	0.5	Extremo 2A	-3.9E-06	89.452	-1.8E-05	-4.7243	1.4E-06	-95.5079
2818	1	Extremo 2A	-3.9E-06	97.636	-1.8E-05	-4.7243	1E-05	-142.28
2820	0	Extremo 1A	-1.1E-06	-103.29	3.8E-06	2.4883	2.4E-06	-151.426
2820	0.5	Extremo 1A	-1.1E-06	-95.105	3.8E-06	2.4883	5.2E-07	-101.827
2820	1	Extremo 1A	-1.1E-06	-86.921	3.8E-06	2.4883	-1.4E-06	-56.3201
2820	0	Extremo 2A	-1E-05	-103.327	3.5E-05	2.4754	2.3E-05	-151.472
2820	0.5	Extremo 2A	-1E-05	-95.143	3.5E-05	2.4754	5.2E-06	-101.855
2820	1	Extremo 2A	-1E-05	-86.959	3.5E-05	2.4754	-1.2E-05	-56.3293
2821	0	Extremo 1A	-7.5E-07	68.442	-3.2E-06	0.4338	-1.2E-06	-55.0587
2821	0.5	Extremo 1A	-7.5E-07	76.627	-3.2E-06	0.4338	3.3E-07	-91.326
2821	1	Extremo 1A	-7.5E-07	84.811	-3.2E-06	0.4338	1.9E-06	-131.686
2821	0	Extremo 2A	-4.8E-06	68.456	-2.2E-05	0.4537	-9.4E-06	-55.0676
2821	0.5	Extremo 2A	-4.8E-06	76.641	-2.2E-05	0.4537	1.7E-06	-91.3418
2821	1	Extremo 2A	-4.8E-06	84.825	-2.2E-05	0.4537	1.3E-05	-131.708
2823	0	Extremo 1A	-1.4E-06	-84.937	4.9E-06	-6.6722	3.1E-06	-133.63
2823	0.5	Extremo 1A	-1.4E-06	-76.753	4.9E-06	-6.6722	6.7E-07	-93.2075
2823	1	Extremo 1A	-1.4E-06	-68.568	4.9E-06	-6.6722	-1.8E-06	-56.8773
2823	0	Extremo 2A	-1.3E-05	-84.95	4.6E-05	-6.6998	3E-05	-133.653
2823	0.5	Extremo 2A	-1.3E-05	-76.765	4.6E-05	-6.6998	6.8E-06	-93.2242
2823	1	Extremo 2A	-1.3E-05	-68.581	4.6E-05	-6.6998	-1.6E-05	-56.8876
2824	0	Extremo 1A	-9.4E-07	62.337	-4E-06	3.6448	-1.6E-06	-53.1225
2824	0.5	Extremo 1A	-9.4E-07	70.521	-4E-06	3.6448	4.1E-07	-86.3371
2824	1	Extremo 1A	-9.4E-07	78.706	-4E-06	3.6448	2.4E-06	-123.644
2824	0	Extremo 2A	-5.8E-06	62.341	-2.7E-05	3.6733	-1.2E-05	-53.1279
2824	0.5	Extremo 2A	-5.8E-06	70.525	-2.7E-05	3.6733	1.9E-06	-86.3444
2824	1	Extremo 2A	-5.8E-06	78.709	-2.7E-05	3.6733	1.6E-05	-123.653
2826	0	Extremo 1A	-1.7E-06	-77.01	6.2E-06	-11.0943	4E-06	-121.895
2826	0.5	Extremo 1A	-1.7E-06	-68.826	6.2E-06	-11.0943	8.7E-07	-85.4357
2826	1	Extremo 1A	-1.7E-06	-60.641	6.2E-06	-11.0943	-2.2E-06	-53.0689
2826	0	Extremo 2A	-1.7E-05	-77.012	5.9E-05	-11.1308	3.8E-05	-121.902
2826	0.5	Extremo 2A	-1.7E-05	-68.828	5.9E-05	-11.1308	8.8E-06	-85.4422
2826	1	Extremo 2A	-1.7E-05	-60.644	5.9E-05	-11.1308	-2.1E-05	-53.0744
2827	0	Extremo 1A	-1.2E-06	60.572	-5E-06	3.9982	-2E-06	-51.421
2827	0.5	Extremo 1A	-1.2E-06	68.756	-5E-06	3.9982	5E-07	-83.753
2827	1	Extremo 1A	-1.2E-06	76.941	-5E-06	3.9982	3E-06	-120.177
2827	0	Extremo 2A	-7E-06	60.572	-3.4E-05	4.0301	-1.5E-05	-51.4235
2827	0.5	Extremo 2A	-7E-06	68.757	-3.4E-05	4.0301	2.2E-06	-83.7557
2827	1	Extremo 2A	-7E-06	76.941	-3.4E-05	4.0301	1.9E-05	-120.18
2829	0	Extremo 1A	-2.2E-06	-74.83	8E-06	-10.7537	5.1E-06	-116.952
2829	0.5	Extremo 1A	-2.2E-06	-66.646	8E-06	-10.7537	1.1E-06	-81.5834
2829	1	Extremo 1A	-2.2E-06	-58.461	8E-06	-10.7537	-2.9E-06	-50.3067
2829	0	Extremo 2A	-2.2E-05	-74.83	7.6E-05	-10.7931	4.9E-05	-116.954
2829	0.5	Extremo 2A	-2.2E-05	-66.645	7.6E-05	-10.7931	1.2E-05	-81.5853
2829	1	Extremo 2A	-2.2E-05	-58.461	7.6E-05	-10.7931	-2.6E-05	-50.3087
2830	0	Extremo 1A	-1.4E-06	60.351	-6.2E-06	3.0592	-2.5E-06	-50.6465
2830	0.5	Extremo 1A	-1.4E-06	68.535	-6.2E-06	3.0592	6.1E-07	-82.8679
2830	1	Extremo 1A	-1.4E-06	76.719	-6.2E-06	3.0592	3.7E-06	-119.181
2830	0	Extremo 2A	-8.3E-06	60.35	-4.1E-05	3.0922	-1.8E-05	-50.6476
2830	0.5	Extremo 2A	-8.3E-06	68.535	-4.1E-05	3.0922	2.4E-06	-82.8689
2830	1	Extremo 2A	-8.3E-06	76.719	-4.1E-05	3.0922	2.3E-05	-119.182
2832	0	Extremo 1A	-2.9E-06	-74.466	1E-05	-8.2548	6.6E-06	-115.298
2832	0.5	Extremo 1A	-2.9E-06	-66.282	1E-05	-8.2548	1.5E-06	-80.1107
2832	1	Extremo 1A	-2.9E-06	-58.097	1E-05	-8.2548	-3.7E-06	-49.0159
2832	0	Extremo 2A	-2.8E-05	-74.466	9.8E-05	-8.2945	6.4E-05	-115.298
2832	0.5	Extremo 2A	-2.8E-05	-66.281	9.8E-05	-8.2945	1.5E-05	-80.111
2832	1	Extremo 2A	-2.8E-05	-58.097	9.8E-05	-8.2945	-3.4E-05	-49.0164
2833	0	Extremo 1A	-1.8E-06	60.469	-7.7E-06	1.8043	-3.1E-06	-50.4063
2833	0.5	Extremo 1A	-1.8E-06	68.653	-7.7E-06	1.8043	7.4E-07	-82.6868
2833	1	Extremo 1A	-1.8E-06	76.838	-7.7E-06	1.8043	4.6E-06	-119.06
2833	0	Extremo 2A	-9.9E-06	60.469	-5.1E-05	1.8377	-2.3E-05	-50.407
2833	0.5	Extremo 2A	-9.9E-06	68.654	-5.1E-05	1.8377	2.5E-06	-82.6877
2833	1	Extremo 2A	-9.9E-06	76.838	-5.1E-05	1.8377	2.8E-05	-119.061
2835	0	Extremo 1A	-3.7E-06	-74.487	1.3E-05	-5.0463	8.5E-06	-114.825
2835	0.5	Extremo 1A	-3.7E-06	-66.303	1.3E-05	-5.0463	1.9E-06	-79.6276
2835	1	Extremo 1A	-3.7E-06	-58.119	1.3E-05	-5.0463	-4.7E-06	-48.5222
2835	0	Extremo 2A	-3.7E-05	-74.487	0.00013	-5.0859	8.3E-05	-114.825
2835	0.5	Extremo 2A	-3.7E-05	-66.303	0.00013	-5.0859	2E-05	-79.6275
2835	1	Extremo 2A	-3.7E-05	-58.118	0.00013	-5.0859	-4.4E-05	-48.5222
2836	0	Extremo 1A	-2.2E-06	60.566	-9.7E-06	0.5547	-3.9E-06	-50.3591
2836	0.5	Extremo 1A	-2.2E-06	68.751	-9.7E-06	0.5547	9E-07	-82.6883
2836	1	Extremo 1A	-2.2E-06	76.935	-9.7E-06	0.5547	5.7E-06	-119.11
2836	0	Extremo 2A	-1.2E-05	60.567	-6.2E-05	0.5889	-2.8E-05	-50.36
2836	0.5	Extremo 2A	-1.2E-05	68.751	-6.2E-05	0.5889	2.5E-06	-82.6896
2836	1	Extremo 2A	-1.2E-05	76.936	-6.2E-05	0.5889	3.3E-05	-119.111
2838	0	Extremo 1A	-4.8E-06	-74.529	1.7E-05	-1.6567	1.1E-05	-114.711
2838	0.5	Extremo 1A	-4.8E-06	-66.345	1.7E-05	-1.6567	2.4E-06	-79.4922
2838	1	Extremo 1A	-4.8E-06	-58.16	1.7E-05	-1.6567	-6.1E-06	-48.3659
2838	0	Extremo 2A	-4.8E-05	-74.529	0.00016	-1.6962	0.00011	-114.711
2838	0.5	Extremo 2A	-4.8E-05	-66.345	0.00016	-1.6962	2.6E-05	-79.4921
2838	1	Extremo 2A	-4.8E-05	-58.161	0.00016	-1.6962	-5.6E-05	-48.3657
2839	0	Extremo 1A	-2.7E-06	60.565	-1.2E-05	-0.6683	-5E-06	-50.3592
2839	0.5	Extremo 1A	-2.7E-06	68.75	-1.2E-05	-0.6683	1.1E-06	-82.688
2839	1	Extremo 1A	-2.7E-06	76.934	-1.2E-05	-0.6683	7.1E-06	-119.109
2839	0	Extremo 2A	-1.4E-05	60.567	-7.5E-05	-0.6325	-3.5E-05	-50.3605
2839	0.5	Extremo 2A	-1.4E-05	68.751	-7.5E-05	-0.6325	2.3E-06	-82.6901
2839	1	Extremo 2A	-1.4E-05	76.936	-7.5E-05	-0.6325	4E-05	-119.112
2841	0	Extremo 1A	-6.2E-06	-74.528	2.2E-05	1.7636	1.4E-05	-114.71
2841	0.5	Extremo 1A	-6.2E-06	-66.344	2.2E-05	1.7636	3.2E-06	-79.4917
2841	1	Extremo 1A	-6.2E-06	-58.16	2.2E-05	1.7636	-7.8E-06	-48.3658
2841	0	Extremo 2A	-6.2E-05	-74.529	0.00021	1.7241	0.00014	-114.71

2841	0.5	Extremo 2A	-6.2E-05	-66.344	0.00021	1.7241	3.3E-05	-79.4914
2841	1	Extremo 2A	-6.2E-05	-58.16	0.00021	1.7241	-7.3E-05	-48.3653
2842	0	Extremo 1A	-3.3E-06	60.467	-1.5E-05	-1.9188	-6.2E-06	-50.4074
2842	0.5	Extremo 1A	-3.3E-06	68.651	-1.5E-05	-1.9188	1.3E-06	-82.6869
2842	1	Extremo 1A	-3.3E-06	76.836	-1.5E-05	-1.9188	8.8E-06	-119.059
2842	0	Extremo 2A	-1.6E-05	60.469	-9E-05	-1.8806	-4.3E-05	-50.4088
2842	0.5	Extremo 2A	-1.6E-05	68.654	-9E-05	-1.8806	1.7E-06	-82.6896
2842	1	Extremo 2A	-1.6E-05	76.838	-9E-05	-1.8806	4.7E-05	-119.063
2844	0	Extremo 1A	-8E-06	-74.485	2.8E-05	5.1545	1.8E-05	-114.823
2844	0.5	Extremo 1A	-8E-06	-66.3	2.8E-05	5.1545	4.1E-06	-79.6267
2844	1	Extremo 1A	-8E-06	-58.116	2.8E-05	5.1545	-1E-05	-48.5226
2844	0	Extremo 2A	-8.1E-05	-74.486	0.00027	5.1151	0.00018	-114.822
2844	0.5	Extremo 2A	-8.1E-05	-66.301	0.00027	5.1151	4.4E-05	-79.6256
2844	1	Extremo 2A	-8.1E-05	-58.117	0.00027	5.1151	-9.4E-05	-48.5211
2845	0	Extremo 1A	-4.1E-06	60.348	-1.9E-05	-3.174	-7.8E-06	-50.6517
2845	0.5	Extremo 1A	-4.1E-06	68.532	-1.9E-05	-3.174	1.5E-06	-82.8717
2845	1	Extremo 1A	-4.1E-06	76.717	-1.9E-05	-3.174	1.1E-05	-119.184
2845	0	Extremo 2A	-1.7E-05	60.352	-0.00011	-3.1329	-5.4E-05	-50.6521
2845	0.5	Extremo 2A	-1.7E-05	68.536	-0.00011	-3.1329	5.9E-07	-82.8739
2845	1	Extremo 2A	-1.7E-05	76.72	-0.00011	-3.1329	5.5E-05	-119.188
2847	0	Extremo 1A	-1E-05	-74.462	3.6E-05	8.3647	2.3E-05	-115.297
2847	0.5	Extremo 1A	-1E-05	-66.277	3.6E-05	8.3647	5.3E-06	-80.1119
2847	1	Extremo 1A	-1E-05	-58.093	3.6E-05	8.3647	-1.3E-05	-49.0194
2847	0	Extremo 2A	-0.00011	-74.463	0.00036	8.3264	0.00024	-115.293
2847	0.5	Extremo 2A	-0.00011	-66.278	0.00036	8.3264	5.7E-05	-80.1081
2847	1	Extremo 2A	-0.00011	-58.094	0.00036	8.3264	-0.00012	-49.0151
2848	0	Extremo 1A	-5E-06	60.574	-2.3E-05	-4.1074	-9.8E-06	-51.4372
2848	0.5	Extremo 1A	-5E-06	68.758	-2.3E-05	-4.1074	1.8E-06	-83.7703
2848	1	Extremo 1A	-5E-06	76.943	-2.3E-05	-4.1074	1.3E-05	-120.196
2848	0	Extremo 2A	-1.9E-05	60.577	-0.00013	-4.0647	-6.6E-05	-51.4336
2848	0.5	Extremo 2A	-1.9E-05	68.761	-0.00013	-4.0647	-1.4E-06	-83.768
2848	1	Extremo 2A	-1.9E-05	76.945	-0.00013	-4.0647	6.3E-05	-120.195
2850	0	Extremo 1A	-1.3E-05	-74.826	4.7E-05	10.8614	3E-05	-116.963
2850	0.5	Extremo 1A	-1.3E-05	-66.642	4.7E-05	10.8614	6.9E-06	-81.5954
2850	1	Extremo 1A	-1.3E-05	-58.458	4.7E-05	10.8614	-1.6E-05	-50.3205
2850	0	Extremo 2A	-0.00014	-74.825	0.00046	10.8282	0.00031	-116.95
2850	0.5	Extremo 2A	-0.00014	-66.641	0.00046	10.8282	7.5E-05	-81.5831
2850	1	Extremo 2A	-0.00014	-58.457	0.00046	10.8282	-0.00016	-50.3087
2851	0	Extremo 1A	-6.1E-06	62.363	-2.9E-05	-3.73	-1.2E-05	-53.1611
2851	0.5	Extremo 1A	-6.1E-06	70.547	-2.9E-05	-3.73	2.1E-06	-86.3887
2851	1	Extremo 1A	-6.1E-06	78.732	-2.9E-05	-3.73	1.6E-05	-123.708
2851	0	Extremo 2A	-2E-05	62.356	-0.00015	-3.6925	-8.1E-05	-53.1481
2851	0.5	Extremo 2A	-2E-05	70.54	-0.00015	-3.6925	-4.7E-06	-86.3722
2851	1	Extremo 2A	-2E-05	78.725	-0.00015	-3.6925	7.1E-05	-123.688
2853	0	Extremo 1A	-1.7E-05	-77.024	6E-05	11.1826	3.9E-05	-121.947
2853	0.5	Extremo 1A	-1.7E-05	-68.84	6E-05	11.1826	9E-06	-85.4809
2853	1	Extremo 1A	-1.7E-05	-60.656	6E-05	11.1826	-2.1E-05	-53.1069
2853	0	Extremo 2A	-0.00018	-77.011	0.0006	11.1669	0.0004	-121.906
2853	0.5	Extremo 2A	-0.00018	-68.827	0.0006	11.1669	9.8E-05	-85.4465
2853	1	Extremo 2A	-0.00018	-60.642	0.0006	11.1669	-0.0002	-53.0794
2854	0	Extremo 1A	-7.3E-06	68.542	-3.5E-05	-0.4576	-1.5E-05	-55.1227
2854	0.5	Extremo 1A	-7.3E-06	76.726	-3.5E-05	-0.4576	2.3E-06	-91.4397
2854	1	Extremo 1A	-7.3E-06	84.911	-3.5E-05	-0.4576	2E-05	-131.849
2854	0	Extremo 2A	-2E-05	68.501	-0.00018	-0.4412	-9.9E-05	-55.099
2854	0.5	Extremo 2A	-2E-05	76.685	-0.00018	-0.4412	-9.9E-06	-91.3955
2854	1	Extremo 2A	-2E-05	84.87	-0.00018	-0.4412	7.9E-05	-131.784
2856	0	Extremo 1A	-2.2E-05	-85.025	7.8E-05	6.699	5.1E-05	-133.791
2856	0.5	Extremo 1A	-2.2E-05	-76.841	7.8E-05	6.699	1.2E-05	-93.3241
2856	1	Extremo 1A	-2.2E-05	-68.657	7.8E-05	6.699	-2.7E-05	-56.9497
2856	0	Extremo 2A	-0.00023	-84.967	0.00078	6.728	0.00052	-133.683
2856	0.5	Extremo 2A	-0.00023	-76.782	0.00078	6.728	0.00013	-93.2455
2856	1	Extremo 2A	-0.00023	-68.598	0.00078	6.728	-0.00026	-56.9005
2857	0	Extremo 1A	-8.8E-06	81.481	-4.3E-05	4.7967	-1.9E-05	-52.8637
2857	0.5	Extremo 1A	-8.8E-06	89.666	-4.3E-05	4.7967	2.6E-06	-95.6506
2857	1	Extremo 1A	-8.8E-06	97.85	-4.3E-05	4.7967	2.4E-05	-142.53
2857	0	Extremo 2A	-1.8E-05	81.369	-0.0002	4.7814	-0.00012	-52.8527
2857	0.5	Extremo 2A	-1.8E-05	89.553	-0.0002	4.7814	-1.8E-05	-95.5832
2857	1	Extremo 2A	-1.8E-05	97.738	-0.0002	4.7814	8.4E-05	-142.406
2859	0	Extremo 1A	-2.9E-05	-103.556	0.0001	-2.5649	6.6E-05	-151.756
2859	0.5	Extremo 1A	-2.9E-05	-95.371	0.0001	-2.5649	1.5E-05	-102.024
2859	1	Extremo 1A	-2.9E-05	-87.187	0.0001	-2.5649	-3.5E-05	-56.3845
2859	0	Extremo 2A	-0.00031	-103.393	0.00101	-2.4641	0.00068	-151.547
2859	0.5	Extremo 2A	-0.00031	-95.208	0.00101	-2.4641	0.00017	-101.896
2859	1	Extremo 2A	-0.00031	-87.024	0.00101	-2.4641	-0.00034	-56.3383
2860	0	Extremo 1A	-1E-05	87.209	-5.3E-05	0.0639	-2.4E-05	-43.1992
2860	0.5	Extremo 1A	-1E-05	95.394	-5.3E-05	0.0639	2.8E-06	-88.8499
2860	1	Extremo 1A	-1E-05	103.578	-5.3E-05	0.0639	2.9E-05	-138.593
2860	0	Extremo 2A	-1.4E-05	87.065	-0.00023	0.0723	-0.00015	-43.2417
2860	0.5	Extremo 2A	-1.4E-05	95.249	-0.00023	0.0723	-3E-05	-88.8202
2860	1	Extremo 2A	-1.4E-05	103.434	-0.00023	0.0723	8.6E-05	-138.491
2862	0	Extremo 1A	-3.8E-05	-113.635	0.00013	-0.0802	8.5E-05	-151.386
2862	0.5	Extremo 1A	-3.8E-05	-105.45	0.00013	-0.0802	0.00002	-96.6149
2862	1	Extremo 1A	-3.8E-05	-97.266	0.00013	-0.0802	-4.5E-05	-45.9358
2862	0	Extremo 2A	-0.0004	-113.415	0.00132	0.0265	0.00088	-151.179
2862	0.5	Extremo 2A	-0.0004	-105.231	0.00132	0.0265	0.00022	-96.5176
2862	1	Extremo 2A	-0.0004	-97.046	0.00132	0.0265	-0.00044	-45.9484
2863	0	Extremo 1A	-1.2E-05	81.482	-6.5E-05	-4.6688	-2.9E-05	-52.8639
2863	0.5	Extremo 1A	-1.2E-05	89.666	-6.5E-05	-4.6688	2.9E-06	-95.6509
2863	1	Extremo 1A	-1.2E-05	97.85	-6.5E-05	-4.6688	3.5E-05	-142.53
2863	0	Extremo 2A	-4.3E-06	81.369	-0.00026	-4.6369	-0.00017	-52.8525
2863	0.5	Extremo 2A	-4.3E-06	89.553	-0.00026	-4.6369	-4.7E-05	-95.5829
2863	1	Extremo 2A	-4.3E-06	97.737	-0.00026	-4.6369	8.1E-05	-142.406
2865	0	Extremo 1A	-4.9E-05	-103.556	0.00017	2.4045	0.00011	-151.756
2865	0.5	Extremo 1A	-4.9E-05	-95.371	0.00017	2.4045	2.6E-05	-102.024
2865	1	Extremo 1A	-4.9E-05	-87.187	0.00017	2.4045	-5.8E-05	-56.3845
2865	0	Extremo 2A	-0.00052	-103.393	0.00172	2.517	0.0012	-151.547
2865	0.5	Extremo 2A	-0.00052	-95.208	0.00172	2.517	0.0003	-101.897
2865	1	Extremo 2A	-0.00052	-87.024	0.00172	2.517	-0.00057	-56.3385
2866	0	Extremo 1A	-1.4E-05	68.542	-7.9E-05	0.5859	-3.7E-05	-55.1232
2866	0.5	Extremo 1A	-1.4E-05	76.727	-7.9E-05	0.5859	2.7E-06	-91.4404
2866	1	Extremo 1A	-1.4E-05	84.911	-7.9E-05	0.5859	4.2E-05	-131.85
2866	0	Extremo 2A	1.2E-05	68.501	-0.00027	0.5854	-0.00021	-55.0986
2866	0.5	Extremo 2A	1.2E-05	76.685	-0.00027	0.5854	-7.2E-05	-91.395
2866	1	Extremo 2A	1.2E-05	84.869	-0.00027	0.5854	6.5E-05	-131.784
2868	0	Extremo 1A	-6.4E-05	-85.026	0.00022	-6.8595	0.00014	-133.791
2868	0.5	Extremo 1A	-6.4E-05	-76.841	0.00022	-6.8595	3.4E-05	-93.3244
2868	1	Extremo 1A	-6.4E-05	-68.657	0.00022	-6.8595	-7.5E-05	-56.9499
2868	0	Extremo 2A	-0.00069	-84.967	0.00224	-6.6754	0.0015	-133.684
2868	0.5	Extremo 2A	-0.00069	-76.783	0.00224	-6.6754	0.00039	-93.2462
2868	1	Extremo 2A	-0.00069	-68.598	0.00224	-6.6754	-0.00073	-56.901
2869	0	Extremo 1A	-1.7E-05	62.364	-9.5E-05	3.859	-4.5E-05	-53.1619
2869	0.5	Extremo 1A	-1.7E-05	70.548	-9.5E-05	3.859	2.3E-06	-86.3898
2869	1	Extremo 1A	-1.7E-05	78.732	-9.5E-05	3.859	5E-05	-123.71
2869	0	Extremo 2A	3.9E-05	62.355	-0.00028	3.8362	-0.00025	-53.1472
2869	0.5	Extremo 2A	3.9E-05	70.54	-0.00028	3.8362	-0.00011	-86.3711
2869	1	Extremo 2A	3.9E-05	78.724	-0.00028	3.8362	3.1E-05	-123.687
2871	0	Extremo 1A	-8.3E-05	-77.025	0.00028	-11.3434	0.00019	-121.948
2871	0.5	Extremo 1A	-8.3E-05	-68.84	0.00028	-11.3434	4.5E-05	-85.4813
2871	1	Extremo 1A	-8.3E-05	-60.656	0.00028	-11.3434	-9.6E-05	-53.1072
2871	0	Extremo 2A	-0.0009	-77.011	0.00293	-11.115	0.002	-121.907
2871	0.5	Extremo 2A	-0.0009	-68.827	0.00293	-11.115	0.00051	-85.4478
2871	1	Extremo 2A	-0.0009	-60.643	0.00293	-11.115	-0.00095	-53.0803
2872	0	Extremo 1A	-1.9E-05	60.575	-0.00011	4.2376	-5.6E-05	-51.4386
2872	0.5	Extremo 1A	-1.9E-05	68.759	-0.00011	4.2376	1.2E-06	-83.7723
2872	1	Extremo 1A	-1.9E-05	76.944	-0.00011	4.2376	5.8E-05	-120.198
2872	0	Extremo 2A	8E-05	60.576	-0.00026	4.2072	-0.00029	-51.4318
2872	0.5	Extremo 2A	8E-05	68.76	-0.00026	4.2072	-0.00016	-83.7658
2872	1	Extremo 2A	8E-05	76.945	-0.00026	4.2072	-2.8E-05	-120.192
2874	0	Extremo 1A	-0.00011	-74.827	0.00037	-11.0226	0.00024	-116.964
2874	0.5	Extremo 1A	-0.00011	-66.643	0.00037	-11.0226	5.8E-05	-81.5961
2874	1	Extremo 1A	-0.00011	-58.458	0.00037	-11.0226	-0.00012	-50.3208
2874	0	Extremo 2A	-0.00119	-74.826	0.00383	-10.7777	0.0026	-116.953
2874	0.5	Extremo 2A	-0.00119	-66.642	0.00383	-10.7777	0.00068	-81.5854
2874	1	Extremo 2A	-0.00119	-58.458	0.00383	-10.7777	-0.0012	-50.3105
2875	0	Extremo 1A	-2.1E-05	60.35	-0.00014	3.3062	-6.9E-05	-50.6539
2875	0.5	Extremo 1A	-2.1E-05	68.534	-0.00014	3.3062	-6.4E-07	-82.8749
2875	1	Extremo 1A	-2.1E-05	76.719	-0.00014	3.3062	6.8E-05	-119.188
2875	0	Extremo 2A	0.00014	60.35	-0.00021	3.2732	-0.00034	-50.6488
2875	0.5	Extremo 2A	0.00014	68.534	-0.00021	3.2732	-0.00023	-82.8698
2875	1	Extremo 2A	0.00014	76.719	-0.00021	3.2732	-0.00013	-119.183
2877	0	Extremo 1A	-0.00014	-74.462	0.00047	-8.5266	0.00031	-115.298
2877	0.5	Extremo 1A	-0.00014	-66.278	0.00047	-8.5266	7.7E-05	-80.1128
2877	1	Extremo 1A	-0.00014	-58.094	0.00047	-8.5266	-0.00016	-49.0198
2877	0	Extremo 2A	-0.00157	-74.464	0.00501	-8.2783	0.0034	-115.298

2877	0.5	Extremo 2A	-0.00157	-66.28	0.00501	-8.2783	0.0009	-80.1123
2877	1	Extremo 2A	-0.00157	-58.096	0.00501	-8.2783	-0.0016	-49.0183
2878	0	Extremo 1A	-2.2E-05	60.47	-0.00016	2.0543	-8.5E-05	-50.4108
2878	0.5	Extremo 1A	-2.2E-05	68.654	-0.00016	2.0543	-3.8E-06	-82.6918
2878	1	Extremo 1A	-2.2E-05	76.839	-0.00016	2.0543	7.7E-05	-119.065
2878	0	Extremo 2A	0.00024	60.466	-0.0001	2.0167	-0.00038	-50.4026
2878	0.5	Extremo 2A	0.00024	68.651	-0.0001	2.0167	-0.00033	-82.6819
2878	1	Extremo 2A	0.00024	76.835	-0.0001	2.0167	-0.00028	-119.053
2880	0	Extremo 1A	-0.00018	-74.486	0.00061	-5.3173	0.00041	-114.825
2880	0.5	Extremo 1A	-0.00018	-66.302	0.00061	-5.3173	0.0001	-79.6277
2880	1	Extremo 1A	-0.00018	-58.117	0.00061	-5.3173	-0.00021	-48.523
2880	0	Extremo 2A	-0.00206	-74.489	0.00656	-5.0716	0.0045	-114.832
2880	0.5	Extremo 2A	-0.00206	-66.305	0.00656	-5.0716	0.0012	-79.6333
2880	1	Extremo 2A	-0.00206	-58.12	0.00656	-5.0716	-0.0021	-48.5271
2881	0	Extremo 1A	-2.3E-05	60.571	-0.00019	0.8093	-0.0001	-50.3642
2881	0.5	Extremo 1A	-2.3E-05	68.755	-0.00019	0.8093	-8.7E-06	-82.6956
2881	1	Extremo 1A	-2.3E-05	76.939	-0.00019	0.8093	8.6E-05	-119.119
2881	0	Extremo 2A	0.00037	60.561	9.3E-05	0.7607	-0.00043	-50.3491
2881	0.5	Extremo 2A	0.00037	68.745	9.3E-05	0.7607	-0.00047	-82.6757
2881	1	Extremo 2A	0.00037	76.93	9.3E-05	0.7607	-0.00052	-119.095
2883	0	Extremo 1A	-0.00024	-74.53	0.0008	-1.9276	0.00053	-114.712
2883	0.5	Extremo 1A	-0.00024	-66.346	0.0008	-1.9276	0.00013	-79.4928
2883	1	Extremo 1A	-0.00024	-58.162	0.0008	-1.9276	-0.00027	-48.3659
2883	0	Extremo 2A	-0.00272	-74.535	0.00861	-1.6891	0.0059	-114.727
2883	0.5	Extremo 2A	-0.00272	-66.351	0.00861	-1.6891	0.0016	-79.5053
2883	1	Extremo 2A	-0.00272	-58.166	0.00861	-1.6891	-0.0027	-48.376
2884	0	Extremo 1A	-2.2E-05	60.575	-0.00022	-0.4051	-0.00013	-50.3657
2884	0.5	Extremo 1A	-2.2E-05	68.759	-0.00022	-0.4051	-1.6E-05	-82.6991
2884	1	Extremo 1A	-2.2E-05	76.943	-0.00022	-0.4051	9.3E-05	-119.125
2884	0	Extremo 2A	0.00057	60.556	0.00041	-0.4758	-0.00046	-50.3392
2884	0.5	Extremo 2A	0.00057	68.74	0.00041	-0.4758	-0.00067	-82.6632
2884	1	Extremo 2A	0.00057	76.924	0.00041	-0.4758	-0.00087	-119.079
2886	0	Extremo 1A	-0.00031	-74.533	0.00104	1.491	0.00069	-114.713
2886	0.5	Extremo 1A	-0.00031	-66.348	0.00104	1.491	0.00017	-79.4926
2886	1	Extremo 1A	-0.00031	-58.164	0.00104	1.491	-0.00035	-48.3645
2886	0	Extremo 2A	-0.0036	-74.541	0.011	1.7155	0.0078	-114.741
2886	0.5	Extremo 2A	-0.0036	-66.357	0.011	1.7155	0.0021	-79.5169
2886	1	Extremo 2A	-0.0036	-58.172	0.011	1.7155	-0.0035	-48.3846
2887	0	Extremo 1A	-1.8E-05	60.482	-0.00025	-1.6423	-0.00015	-50.4127
2887	0.5	Extremo 1A	-1.8E-05	68.667	-0.00025	-1.6423	-2.8E-05	-82.6999
2887	1	Extremo 1A	-1.8E-05	76.851	-0.00025	-1.6423	9.7E-05	-119.079
2887	0	Extremo 2A	0.00084	60.448	0.00092	-1.7527	-0.00048	-50.3692
2887	0.5	Extremo 2A	0.00084	68.632	0.00092	-1.7527	-0.00094	-82.6393
2887	1	Extremo 2A	0.00084	76.817	0.00092	-1.7527	-0.0014	-119.002
2889	0	Extremo 1A	-0.00041	-74.493	0.00135	4.8791	0.0009	-114.825
2889	0.5	Extremo 1A	-0.00041	-66.309	0.00135	4.8791	0.00023	-79.6243
2889	1	Extremo 1A	-0.00041	-58.124	0.00135	4.8791	-0.00045	-48.5161
2889	0	Extremo 2A	-0.00476	-74.509	0.015	5.0765	0.0102	-114.88
2889	0.5	Extremo 2A	-0.00476	-66.325	0.015	5.0765	0.0028	-79.6712
2889	1	Extremo 2A	-0.00476	-58.14	0.015	5.0765	-0.0046	-48.5548
2890	0	Extremo 1A	-9.5E-06	60.368	-0.00028	-2.8832	-0.00018	-50.6464
2890	0.5	Extremo 1A	-9.5E-06	68.552	-0.00028	-2.8832	-4.5E-05	-82.8765
2890	1	Extremo 1A	-9.5E-06	76.737	-0.00028	-2.8832	9.4E-05	-119.199
2890	0	Extremo 2A	0.00124	60.31	0.00169	-3.0601	-0.00046	-50.5797
2890	0.5	Extremo 2A	0.00124	68.494	0.00169	-3.0601	-0.0013	-82.7807
2890	1	Extremo 2A	0.00124	76.679	0.00169	-3.0601	-0.0021	-119.074
2892	0	Extremo 1A	-0.00054	-74.473	0.00176	8.0907	0.0012	-115.285
2892	0.5	Extremo 1A	-0.00054	-66.289	0.00176	8.0907	0.0003	-80.094
2892	1	Extremo 1A	-0.00054	-58.105	0.00176	8.0907	-0.00058	-48.9956
2892	0	Extremo 2A	-0.00631	-74.506	0.02	8.2341	0.0135	-115.392
2892	0.5	Extremo 2A	-0.00631	-66.322	0.02	8.2341	0.0038	-80.1853
2892	1	Extremo 2A	-0.00631	-58.137	0.02	8.2341	-0.006	-49.0707
2893	0	Extremo 1A	5.6E-06	60.583	-0.0003	-3.8172	-0.00022	-51.3976
2893	0.5	Extremo 1A	5.6E-06	68.767	-0.0003	-3.8172	-6.9E-05	-83.735
2893	1	Extremo 1A	5.6E-06	76.951	-0.0003	-3.8172	8.2E-05	-120.165
2893	0	Extremo 2A	0.00178	60.492	0.00283	-4.0971	-0.00039	-51.3043
2893	0.5	Extremo 2A	0.00178	68.676	0.00283	-4.0971	-0.0018	-83.5962
2893	1	Extremo 2A	0.00178	76.86	0.00283	-4.0971	-0.0032	-119.98
2895	0	Extremo 1A	-0.0007	-74.827	0.0023	10.6127	0.0015	-116.892
2895	0.5	Extremo 1A	-0.0007	-66.643	0.0023	10.6127	0.0004	-81.5245
2895	1	Extremo 1A	-0.0007	-58.459	0.0023	10.6127	-0.00075	-50.2491
2895	0	Extremo 2A	-0.00838	-74.901	0.026	10.6456	0.0179	-117.111
2895	0.5	Extremo 2A	-0.00838	-66.716	0.026	10.6456	0.005	-81.7063
2895	1	Extremo 2A	-0.00838	-58.532	0.026	10.6456	-0.0079	-50.3943
2896	0	Extremo 1A	3.1E-05	62.294	-0.00031	-3.4981	-0.00026	-53.0474
2896	0.5	Extremo 1A	3.1E-05	70.479	-0.00031	-3.4981	-0.00011	-86.2406
2896	1	Extremo 1A	3.1E-05	78.663	-0.00031	-3.4981	5.2E-05	-123.526
2896	0	Extremo 2A	0.00254	62.174	0.00452	-3.9213	-0.00023	-52.9306
2896	0.5	Extremo 2A	0.00254	70.358	0.00452	-3.9213	-0.0025	-86.0637
2896	1	Extremo 2A	0.00254	78.543	0.00452	-3.9213	-0.0047	-123.289
2898	0	Extremo 1A	-0.00092	-76.944	0.003	11.0386	0.002	-121.691
2898	0.5	Extremo 1A	-0.00092	-68.76	0.003	11.0386	0.00052	-85.2647
2898	1	Extremo 1A	-0.00092	-60.576	0.003	11.0386	-0.00097	-52.9308
2898	0	Extremo 2A	-0.011	-77.13	0.034	10.8435	0.0237	-122.145
2898	0.5	Extremo 2A	-0.011	-68.945	0.034	10.8435	0.0067	-85.6263
2898	1	Extremo 2A	-0.011	-60.761	0.034	10.8435	-0.0103	-53.1999
2899	0	Extremo 1A	7E-05	68.215	-0.00031	-0.4083	-0.00031	-54.9247
2899	0.5	Extremo 1A	7E-05	76.4	-0.00031	-0.4083	-0.00016	-91.0784
2899	1	Extremo 1A	7E-05	84.584	-0.00031	-0.4083	-2.8E-06	-131.324
2899	0	Extremo 2A	0.00358	68.109	0.00695	-1.0075	6.8E-05	-54.786
2899	0.5	Extremo 2A	0.00358	76.294	0.00695	-1.0075	-0.0034	-90.8867
2899	1	Extremo 2A	0.00358	84.478	0.00695	-1.0075	-0.0069	-131.08
2901	0	Extremo 1A	-0.00121	-84.639	0.00392	6.8407	0.0027	-133.082
2901	0.5	Extremo 1A	-0.00121	-76.454	0.00392	6.8407	0.00069	-92.809
2901	1	Extremo 1A	-0.00121	-68.27	0.00392	6.8407	-0.0013	-56.6279
2901	0	Extremo 2A	-0.015	-85.124	0.045	6.2069	0.0314	-133.995
2901	0.5	Extremo 2A	-0.015	-76.94	0.045	6.2069	0.009	-93.4789
2901	1	Extremo 2A	-0.015	-68.755	0.045	6.2069	-0.0134	-57.0552
2902	0	Extremo 1A	0.00013	80.622	-0.00026	4.5762	-0.00036	-52.7541
2902	0.5	Extremo 1A	0.00013	88.806	-0.00026	4.5762	-0.00023	-95.111
2902	1	Extremo 1A	0.00013	96.99	-0.00026	4.5762	-9.5E-05	-141.56
2902	0	Extremo 2A	0.005	80.619	0.01	3.7601	0.00057	-52.5538
2902	0.5	Extremo 2A	0.005	88.804	0.01	3.7601	-0.0046	-94.9096
2902	1	Extremo 2A	0.005	96.988	0.01	3.7601	-0.0098	-141.358
2904	0	Extremo 1A	-0.0016	-102.451	0.00512	-1.9574	0.0035	-150.355
2904	0.5	Extremo 1A	-0.0016	-94.267	0.00512	-1.9574	0.00092	-101.175
2904	1	Extremo 1A	-0.0016	-86.083	0.00512	-1.9574	-0.0016	-56.088
2904	0	Extremo 2A	-0.02	-103.55	0.059	-3.2393	0.0417	-151.897
2904	0.5	Extremo 2A	-0.02	-95.366	0.059	-3.2393	0.0121	-102.168
2904	1	Extremo 2A	-0.02	-87.181	0.059	-3.2393	-0.0176	-56.5312
2905	0	Extremo 1A	0.00022	86.113	-0.00017	-0.0236	-0.00041	-43.4818
2905	0.5	Extremo 1A	0.00022	94.297	-0.00017	-0.0236	-0.00033	-88.5844
2905	1	Extremo 1A	0.00022	102.482	-0.00017	-0.0236	-0.00024	-137.779
2905	0	Extremo 2A	0.00693	86.161	0.015	-1.2177	0.0014	-43.1533
2905	0.5	Extremo 2A	0.00693	94.345	0.015	-1.2177	-0.0063	-88.2797
2905	1	Extremo 2A	0.00693	102.529	0.015	-1.2177	-0.014	-137.498
2907	0	Extremo 1A	-0.0021	-112.139	0.0067	0.5304	0.0046	-150.003
2907	0.5	Extremo 1A	-0.0021	-103.955	0.0067	0.5304	0.0012	-95.9797
2907	1	Extremo 1A	-0.0021	-95.77	0.0067	0.5304	-0.0021	-46.0485
2907	0	Extremo 2A	-0.026	-113.565	0.079	-1.086	0.0555	-151.569
2907	0.5	Extremo 2A	-0.026	-105.381	0.079	-1.086	0.0162	-96.8321
2907	1	Extremo 2A	-0.026	-97.196	0.079	-1.086	-0.0231	-46.1879
2908	0	Extremo 1A	0.00035	80.62	1E-05	-4.6244	-0.00046	-52.7522
2908	0.5	Extremo 1A	0.00035	88.805	1E-05	-4.6244	-0.00047	-95.1084
2908	1	Extremo 1A	0.00035	96.989	1E-05	-4.6244	-0.00047	-141.557
2908	0	Extremo 2A	0.00952	80.624	0.022	-6.1919	0.0026	-52.5608
2908	0.5	Extremo 2A	0.00952	88.809	0.022	-6.1919	-0.0085	-94.919
2908	1	Extremo 2A	0.00952	96.993	0.022	-6.1919	-0.0196	-141.37
2910	0	Extremo 1A	-0.00278	-102.451	0.00879	3.0181	0.006	-150.355
2910	0.5	Extremo 1A	-0.00278	-94.267	0.00879	3.0181	0.0016	-101.176
2910	1	Extremo 1A	-0.00278	-86.082	0.00879	3.0181	-0.0028	-56.0884
2910	0	Extremo 2A	-0.035	-103.551	0.104	1.0677	0.0739	-151.896
2910	0.5	Extremo 2A	-0.035	-95.366	0.104	1.0677	0.0218	-102.167
2910	1	Extremo 2A	-0.035	-87.182	0.104	1.0677	-0.0303	-56.5301
2911	0	Extremo 1A	0.00055	68.212	0.00031	0.3571	-0.00051	-54.9202
2911	0.5	Extremo 1A	0.00055	76.397	0.00031	0.3571	-0.00066	-91.0725
2911	1	Extremo 1A	0.00055	84.581	0.00031	0.3571	-0.00082	-131.317
2911	0	Extremo 2A	0.013	68.12	0.032	-1.4126	0.0045	-54.8018
2911	0.5	Extremo 2A	0.013	76.305	0.032	-1.4126	-0.0114	-90.9081
2911	1	Extremo 2A	0.013	84.489	0.032	-1.4126	-0.0272	-131.107
2913	0	Extremo 1A	-0.00367	-84.639	0.012	-5.7805	0.0079	-133.083
2913	0.5	Extremo 1A	-0.00367	-76.454	0.012	-5.7805	0.0021	-92.8101
2913	1	Extremo 1A	-0.00367	-68.27	0.012	-5.7805	-0.0036	-56.629
2913	0	Extremo 2A	-0.047	-85.124	0.138	-8.3769	0.0987	-133.993

2913	0.5	Extremo 2A	-0.047	-76.94	0.138	-8.3769	0.0295	-93.4764
2913	1	Extremo 2A	-0.047	-68.756	0.138	-8.3769	-0.0397	-57.0524
2914	0	Extremo 1A	0.00082	62.289	0.00079	3.4406	-0.00053	-53.0391
2914	0.5	Extremo 1A	0.00082	70.473	0.00079	3.4406	-0.00093	-86.2295
2914	1	Extremo 1A	0.00082	78.657	0.00079	3.4406	-0.0013	-123.512
2914	0	Extremo 2A	0.018	62.195	0.045	1.5241	0.0074	-52.9594
2914	0.5	Extremo 2A	0.018	70.379	0.045	1.5241	-0.0151	-86.1029
2914	1	Extremo 2A	0.018	78.563	0.045	1.5241	-0.0376	-123.339
2916	0	Extremo 1A	-0.00485	-76.945	0.015	-9.9798	0.0104	-121.694
2916	0.5	Extremo 1A	-0.00485	-68.76	0.015	-9.9798	0.0029	-85.2674
2916	1	Extremo 1A	-0.00485	-60.576	0.015	-9.9798	-0.0047	-52.9334
2916	0	Extremo 2A	-0.064	-77.13	0.184	-13.0096	0.1319	-122.139
2916	0.5	Extremo 2A	-0.064	-68.945	0.184	-13.0096	0.0399	-85.62
2916	1	Extremo 2A	-0.064	-60.761	0.184	-13.0096	-0.0522	-53.1936
2917	0	Extremo 1A	0.00121	60.573	0.00153	3.7483	-0.00053	-51.3828
2917	0.5	Extremo 1A	0.00121	68.757	0.00153	3.7483	-0.0013	-83.7153
2917	1	Extremo 1A	0.00121	76.942	0.00153	3.7483	-0.0021	-120.14
2917	0	Extremo 2A	0.024	60.527	0.063	1.7408	0.0115	-51.3536
2917	0.5	Extremo 2A	0.024	68.712	0.063	1.7408	-0.02	-83.6634
2917	1	Extremo 2A	0.024	76.896	0.063	1.7408	-0.0515	-120.065
2919	0	Extremo 1A	-0.00643	-74.828	0.02	-9.5569	0.0138	-116.899
2919	0.5	Extremo 1A	-0.00643	-66.644	0.02	-9.5569	0.0038	-81.5305
2919	1	Extremo 1A	-0.00643	-58.46	0.02	-9.5569	-0.0061	-50.2546
2919	0	Extremo 2A	-0.086	-74.899	0.245	-12.8025	0.1768	-117.096
2919	0.5	Extremo 2A	-0.086	-66.714	0.245	-12.8025	0.0541	-81.6923
2919	1	Extremo 2A	-0.086	-58.53	0.245	-12.8025	-0.0686	-50.3812
2920	0	Extremo 1A	0.00175	60.351	0.00265	2.794	-0.00048	-50.6208
2920	0.5	Extremo 1A	0.00175	68.535	0.00265	2.794	-0.0018	-82.8423
2920	1	Extremo 1A	0.00175	76.72	0.00265	2.794	-0.0031	-119.156
2920	0	Extremo 2A	0.031	60.37	0.088	0.7737	0.0176	-50.6611
2920	0.5	Extremo 2A	0.031	68.555	0.088	0.7737	-0.0262	-82.8924
2920	1	Extremo 2A	0.031	76.739	0.088	0.7737	-0.07	-119.216
2922	0	Extremo 1A	-0.00853	-74.476	0.026	-7.0416	0.0182	-115.299
2922	0.5	Extremo 1A	-0.00853	-66.292	0.026	-7.0416	0.0051	-80.1066
2922	1	Extremo 1A	-0.00853	-58.108	0.026	-7.0416	-0.008	-49.0068
2922	0	Extremo 2A	-0.116	-74.5	0.328	-10.3717	0.2376	-115.36
2922	0.5	Extremo 2A	-0.116	-66.315	0.328	-10.3717	0.0737	-80.1564
2922	1	Extremo 2A	-0.116	-58.131	0.328	-10.3717	-0.0903	-49.0448
2923	0	Extremo 1A	0.0025	60.452	0.00429	1.5172	-0.00034	-50.3689
2923	0.5	Extremo 1A	0.0025	68.636	0.00429	1.5172	-0.0025	-82.641
2923	1	Extremo 1A	0.0025	76.821	0.00429	1.5172	-0.0046	-119.005
2923	0	Extremo 2A	0.042	60.549	0.121	-0.4171	0.0263	-50.5004
2923	0.5	Extremo 2A	0.042	68.733	0.121	-0.4171	-0.0341	-82.8209
2923	1	Extremo 2A	0.042	76.918	0.121	-0.4171	-0.0944	-119.234
2925	0	Extremo 1A	-0.011	-74.5	0.035	-3.8438	0.0241	-114.854
2925	0.5	Extremo 1A	-0.011	-66.316	0.035	-3.8438	0.0068	-79.65
2925	1	Extremo 1A	-0.011	-58.131	0.035	-3.8438	-0.0105	-48.5383
2925	0	Extremo 2A	-0.157	-74.494	0.44	-7.1751	0.3207	-114.815
2925	0.5	Extremo 2A	-0.157	-66.309	0.44	-7.1751	0.1008	-79.6145
2925	1	Extremo 2A	-0.157	-58.125	0.44	-7.1751	-0.1191	-48.5059
2926	0	Extremo 1A	0.00353	60.522	0.00668	0.2172	-6.4E-05	-50.2922
2926	0.5	Extremo 1A	0.00353	68.706	0.00668	0.2172	-0.0034	-82.5992
2926	1	Extremo 1A	0.00353	76.89	0.00668	0.2172	-0.0067	-118.998
2926	0	Extremo 2A	0.055	60.72	0.165	-1.5036	0.0387	-50.5454
2926	0.5	Extremo 2A	0.055	68.905	0.165	-1.5036	-0.0438	-82.9517
2926	1	Extremo 2A	0.055	77.089	0.165	-1.5036	-0.1264	-119.45
2928	0	Extremo 1A	-0.015	-74.547	0.046	-0.4833	0.032	-114.771
2928	0.5	Extremo 1A	-0.015	-66.363	0.046	-0.4833	0.0091	-79.5435
2928	1	Extremo 1A	-0.015	-58.178	0.046	-0.4833	-0.0137	-48.4082
2928	0	Extremo 2A	-0.214	-74.509	0.594	-3.7391	0.4356	-114.619
2928	0.5	Extremo 2A	-0.214	-66.324	0.594	-3.7391	0.1388	-79.4112
2928	1	Extremo 2A	-0.214	-58.14	0.594	-3.7391	-0.1579	-48.2952
2929	0	Extremo 1A	0.00495	60.478	0.01	-1.1057	0.00041	-50.2445
2929	0.5	Extremo 1A	0.00495	68.662	0.01	-1.1057	-0.0046	-82.5296
2929	1	Extremo 1A	0.00495	76.847	0.01	-1.1057	-0.0097	-118.907
2929	0	Extremo 2A	0.072	60.824	0.224	-2.4368	0.0564	-50.6632
2929	0.5	Extremo 2A	0.072	69.008	0.224	-2.4368	-0.0557	-83.1211
2929	1	Extremo 2A	0.072	77.192	0.224	-2.4368	-0.1677	-119.671
2931	0	Extremo 1A	-0.02	-74.56	0.06	2.8806	0.0424	-114.827
2931	0.5	Extremo 1A	-0.02	-66.375	0.06	2.8806	0.0122	-79.5928
2931	1	Extremo 1A	-0.02	-58.191	0.06	2.8806	-0.018	-48.4513
2931	0	Extremo 2A	-0.291	-74.473	0.81	-0.1956	0.5982	-114.507
2931	0.5	Extremo 2A	-0.291	-66.289	0.81	-0.1956	0.1933	-79.3162
2931	1	Extremo 2A	-0.291	-58.104	0.81	-0.1956	-0.2117	-48.2179
2932	0	Extremo 1A	0.00687	60.311	0.015	-2.533	0.0012	-50.2249
2932	0.5	Extremo 1A	0.00687	68.495	0.015	-2.533	-0.0063	-82.4262
2932	1	Extremo 1A	0.00687	76.679	0.015	-2.533	-0.0138	-118.72
2932	0	Extremo 2A	0.093	60.871	0.302	-3.2253	0.0813	-50.863
2932	0.5	Extremo 2A	0.093	69.056	0.302	-3.2253	-0.0697	-83.3448
2932	1	Extremo 2A	0.093	77.24	0.302	-3.2253	-0.2207	-119.919
2934	0	Extremo 1A	-0.027	-74.544	0.08	6.1607	0.0564	-115.051
2934	0.5	Extremo 1A	-0.027	-66.36	0.08	6.1607	0.0164	-79.8254
2934	1	Extremo 1A	-0.027	-58.175	0.08	6.1607	-0.0236	-48.6917
2934	0	Extremo 2A	-0.4	-74.384	1.127	3.4334	0.8366	-114.454
2934	0.5	Extremo 2A	-0.4	-66.199	1.127	3.4334	0.2733	-79.3078
2934	1	Extremo 2A	-0.4	-58.015	1.127	3.4334	-0.2901	-48.2543
2935	0	Extremo 1A	0.00946	60.089	0.022	-4.0752	0.0024	-50.3877
2935	0.5	Extremo 1A	0.00946	68.273	0.022	-4.0752	-0.0085	-82.4782
2935	1	Extremo 1A	0.00946	76.457	0.022	-4.0752	-0.0194	-118.661
2935	0	Extremo 2A	0.12	60.949	0.402	-3.7907	0.1152	-51.2923
2935	0.5	Extremo 2A	0.12	69.133	0.402	-3.7907	-0.0859	-83.8128
2935	1	Extremo 2A	0.12	77.318	0.402	-3.7907	-0.287	-120.426
2937	0	Extremo 1A	-0.036	-74.586	0.106	9.1434	0.0752	-115.76
2937	0.5	Extremo 1A	-0.036	-66.402	0.106	9.1434	0.0221	-80.5132
2937	1	Extremo 1A	-0.036	-58.218	0.106	9.1434	-0.0309	-49.3583
2937	0	Extremo 2A	-0.551	-74.313	1.621	7.058	1.2066	-114.671
2937	0.5	Extremo 2A	-0.551	-66.129	1.621	7.058	0.3961	-79.5603
2937	1	Extremo 2A	-0.551	-57.944	1.621	7.058	-0.4144	-48.542
2938	0	Extremo 1A	0.013	60.194	0.031	-5.4265	0.0042	-51.106
2938	0.5	Extremo 1A	0.013	68.379	0.031	-5.4265	-0.0114	-83.2493
2938	1	Extremo 1A	0.013	76.563	0.031	-5.4265	-0.027	-119.485
2938	0	Extremo 2A	0.144	61.419	0.524	-3.7556	0.1582	-52.2799
2938	0.5	Extremo 2A	0.144	69.603	0.524	-3.7556	-0.1039	-85.0353
2938	1	Extremo 2A	0.144	77.787	0.524	-3.7556	-0.3659	-121.883
2940	0	Extremo 1A	-0.048	-75.134	0.141	11.1508	0.1003	-117.952
2940	0.5	Extremo 1A	-0.048	-66.949	0.141	11.1508	0.0299	-82.4308
2940	1	Extremo 1A	-0.048	-58.765	0.141	11.1508	-0.0405	-51.0024
2940	0	Extremo 2A	-0.753	-74.617	2.46	10.2571	1.8274	-115.832
2940	0.5	Extremo 2A	-0.753	-66.433	2.46	10.2571	0.5972	-80.5696
2940	1	Extremo 2A	-0.753	-58.248	2.46	10.2571	-0.633	-49.3994
2941	0	Extremo 1A	0.017	61.952	0.044	-5.5642	0.007	-52.8234
2941	0.5	Extremo 1A	0.017	70.137	0.044	-5.5642	-0.0152	-85.8455
2941	1	Extremo 1A	0.017	78.321	0.044	-5.5642	-0.0373	-122.96
2941	0	Extremo 2A	0.139	63.495	0.651	-2.1158	0.204	-54.1769
2941	0.5	Extremo 2A	0.139	71.679	0.651	-2.1158	-0.1217	-87.9704
2941	1	Extremo 2A	0.139	79.864	0.651	-2.1158	-0.4474	-125.856
2943	0	Extremo 1A	-0.065	-77.888	0.187	10.4074	0.134	-124.118
2943	0.5	Extremo 1A	-0.065	-69.703	0.187	10.4074	0.0404	-87.2208
2943	1	Extremo 1A	-0.065	-61.519	0.187	10.4074	-0.0532	-54.4153
2943	0	Extremo 2A	-0.928	-75.819	4.033	11.9396	2.9712	-119.007
2943	0.5	Extremo 2A	-0.928	-67.635	4.033	11.9396	0.9546	-83.1434
2943	1	Extremo 2A	-0.928	-59.45	4.033	11.9396	-1.0619	-51.3721
2944	0	Extremo 1A	0.024	68.479	0.062	-2.7933	0.0111	-54.8072
2944	0.5	Extremo 1A	0.024	76.664	0.062	-2.7933	-0.0201	-91.093
2944	1	Extremo 1A	0.024	84.848	0.062	-2.7933	-0.0512	-131.471
2944	0	Extremo 2A	0.062	70.055	0.74	2.6291	0.2359	-56.1536
2944	0.5	Extremo 2A	0.062	78.239	0.74	2.6291	-0.134	-93.2272
2944	1	Extremo 2A	0.062	86.424	0.74	2.6291	-0.5039	-134.393
2946	0	Extremo 1A	-0.087	-87.473	0.25	3.7885	0.1795	-138.356
2946	0.5	Extremo 1A	-0.087	-79.289	0.25	3.7885	0.0548	-96.6653
2946	1	Extremo 1A	-0.087	-71.104	0.25	3.7885	-0.07	-59.067
2946	0	Extremo 2A	-0.495	-74.73	7.324	9.354	5.2374	-123.238
2946	0.5	Extremo 2A	-0.495	-66.545	7.324	9.354	1.5756	-87.9196
2946	1	Extremo 2A	-0.495	-58.361	7.324	9.354	-2.0862	-56.6929
2947	0	Extremo 1A	0.031	82.45	0.087	1.9156	0.017	-52.2367
2947	0.5	Extremo 1A	0.031	90.635	0.087	1.9156	-0.0264	-95.5079
2947	1	Extremo 1A	0.031	98.819	0.087	1.9156	-0.0698	-142.871
2947	0	Extremo 2A	-0.062	83.561	0.74	9.1705	0.2359	-53.4015
2947	0.5	Extremo 2A	-0.062	91.745	0.74	9.1705	-0.134	-97.2281
2947	1	Extremo 2A	-0.062	99.93	0.74	9.1705	-0.5038	-145.147
2949	0	Extremo 1A	-0.118	-109.342	0.333	-8.666	0.2412	-159.675
2949	0.5	Extremo 1A	-0.118	-101.158	0.333	-8.666	0.0746	-107.05
2949	1	Extremo 1A	-0.118	-92.973	0.333	-8.666	-0.0921	-58.5168
2949	0	Extremo 2A	0.494	-98.095	7.324	1.4162	5.2375	-146.188

2949	0.5	Extremo 2A	0.494	-89.91	7.324	1.4162	1.5756	-99.187
2949	1	Extremo 2A	0.494	-81.726	7.324	1.4162	-2.0862	-56.2779
2950	0	Extremo 1A	0.042	88.689	0.12	-4.4058	0.0257	-41.6856
2950	0.5	Extremo 1A	0.042	96.873	0.12	-4.4058	-0.0343	-88.076
2950	1	Extremo 1A	0.042	105.057	0.12	-4.4058	-0.0943	-138.559
2950	0	Extremo 2A	-0.139	89.136	0.651	4.3302	0.2039	-42.5804
2950	0.5	Extremo 2A	-0.139	97.321	0.651	4.3302	-0.1217	-89.1948
2950	1	Extremo 2A	-0.139	105.505	0.651	4.3302	-0.4474	-139.901
2952	0	Extremo 1A	-0.159	-121.194	0.447	-7.5239	0.3254	-159.319
2952	0.5	Extremo 1A	-0.159	-113.01	0.447	-7.5239	0.102	-100.768
2952	1	Extremo 1A	-0.159	-104.825	0.447	-7.5239	-0.1214	-46.309
2952	0	Extremo 2A	0.928	-122.221	4.034	6.5271	2.9715	-157.298
2952	0.5	Extremo 2A	0.928	-114.037	4.034	6.5271	0.9547	-98.2337
2952	1	Extremo 2A	0.928	-105.852	4.034	6.5271	-1.0621	-43.2614
2953	0	Extremo 1A	0.055	82.616	0.164	-10.6056	0.038	-52.4495
2953	0.5	Extremo 1A	0.055	90.8	0.164	-10.6056	-0.0442	-95.8033
2953	1	Extremo 1A	0.055	98.984	0.164	-10.6056	-0.1263	-143.249
2953	0	Extremo 2A	-0.144	82.554	0.524	-1.0815	0.1581	-52.7163
2953	0.5	Extremo 2A	-0.144	90.739	0.524	-1.0815	-0.1039	-96.0395
2953	1	Extremo 2A	-0.144	98.923	0.524	-1.0815	-0.3658	-143.455
2955	0	Extremo 1A	-0.217	-109.285	0.603	-6.3142	0.4418	-159.486
2955	0.5	Extremo 1A	-0.217	-101.101	0.603	-6.3142	0.1405	-106.889
2955	1	Extremo 1A	-0.217	-92.916	0.603	-6.3142	-0.1609	-58.3851
2955	0	Extremo 2A	0.753	-111.477	2.461	9.4056	1.8279	-161.171
2955	0.5	Extremo 2A	0.753	-103.292	2.461	9.4056	0.5973	-107.479
2955	1	Extremo 2A	0.753	-95.108	2.461	9.4056	-0.6332	-57.8786
2956	0	Extremo 1A	0.072	68.849	0.223	-5.5061	0.0556	-55.2686
2956	0.5	Extremo 1A	0.072	77.033	0.223	-5.5061	-0.0562	-91.7391
2956	1	Extremo 1A	0.072	85.218	0.223	-5.5061	-0.1679	-132.302
2956	0	Extremo 2A	-0.12	68.514	0.402	3.9822	0.115	-55.0155
2956	0.5	Extremo 2A	-0.12	76.699	0.402	3.9822	-0.0859	-91.3187
2956	1	Extremo 2A	-0.12	84.883	0.402	3.9822	-0.2869	-131.714
2958	0	Extremo 1A	-0.295	-87.34	0.822	-18.5416	0.6064	-137.913
2958	0.5	Extremo 1A	-0.295	-79.155	0.822	-18.5416	0.1954	-96.2893
2958	1	Extremo 1A	-0.295	-70.971	0.822	-18.5416	-0.2155	-58.7577
2958	0	Extremo 2A	0.551	-88.51	1.622	-3.4934	1.2072	-139.631
2958	0.5	Extremo 2A	0.551	-80.326	1.622	-3.4934	0.3963	-97.4216
2958	1	Extremo 2A	0.551	-72.142	1.622	-3.4934	-0.4147	-59.3048
2959	0	Extremo 1A	0.094	62.606	0.301	-1.998	0.0803	-53.5991
2959	0.5	Extremo 1A	0.094	70.79	0.301	-1.998	-0.0704	-86.948
2959	1	Extremo 1A	0.094	78.974	0.301	-1.998	-0.2211	-124.389
2959	0	Extremo 2A	-0.093	61.973	0.302	6.8772	0.0811	-52.9099
2959	0.5	Extremo 2A	-0.093	70.158	0.302	6.8772	-0.0697	-85.9427
2959	1	Extremo 2A	-0.093	78.342	0.302	6.8772	-0.2205	-123.068
2961	0	Extremo 1A	-0.405	-77.635	1.142	-24.6912	0.8473	-123.271
2961	0.5	Extremo 1A	-0.405	-69.451	1.142	-24.6912	0.2761	-86.499
2961	1	Extremo 1A	-0.405	-61.266	1.142	-24.6912	-0.2951	-53.8197
2961	0	Extremo 2A	0.399	-78.305	1.128	-10.676	0.8375	-124.815
2961	0.5	Extremo 2A	0.399	-70.121	1.128	-10.676	0.2735	-87.708
2961	1	Extremo 2A	0.399	-61.936	1.128	-10.676	-0.2905	-54.6936
2962	0	Extremo 1A	0.121	61.248	0.402	-0.9323	0.114	-52.2733
2962	0.5	Extremo 1A	0.121	69.433	0.402	-0.9323	-0.0869	-84.9437
2962	1	Extremo 1A	0.121	77.617	0.402	-0.9323	-0.2879	-121.706
2962	0	Extremo 2A	-0.072	60.211	0.224	6.7831	0.0562	-51.1411
2962	0.5	Extremo 2A	-0.072	68.395	0.224	6.7831	-0.0557	-83.2926
2962	1	Extremo 2A	-0.072	76.579	0.224	6.7831	-0.1676	-119.536
2964	0	Extremo 1A	-0.557	-74.687	1.642	-24.5531	1.2207	-116.394
2964	0.5	Extremo 1A	-0.557	-66.502	1.642	-24.5531	0.3999	-81.0967
2964	1	Extremo 1A	-0.557	-58.318	1.642	-24.5531	-0.4209	-49.8917
2964	0	Extremo 2A	0.291	-75.302	0.812	-11.7492	0.5994	-118.29
2964	0.5	Extremo 2A	0.291	-67.117	0.812	-11.7492	0.1935	-82.6849
2964	1	Extremo 2A	0.291	-58.933	0.812	-11.7492	-0.2123	-51.1723
2965	0	Extremo 1A	0.145	61.665	0.525	-0.4853	0.1569	-51.9936
2965	0.5	Extremo 1A	0.145	69.85	0.525	-0.4853	-0.1053	-84.8724
2965	1	Extremo 1A	0.145	78.034	0.525	-0.4853	-0.3676	-121.843
2965	0	Extremo 2A	-0.055	60.097	0.165	5.4469	0.0384	-50.3977
2965	0.5	Extremo 2A	-0.055	68.281	0.165	5.4469	-0.0439	-82.4922
2965	1	Extremo 2A	-0.055	76.465	0.165	5.4469	-0.1262	-118.679
2967	0	Extremo 1A	-0.762	-73.732	2.488	-20.9	1.846	-112.776
2967	0.5	Extremo 1A	-0.762	-65.547	2.488	-20.9	0.6023	-77.9566
2967	1	Extremo 1A	-0.762	-57.363	2.488	-20.9	-0.6415	-47.2291
2967	0	Extremo 2A	0.213	-74.651	0.596	-9.8984	0.4372	-115.905
2967	0.5	Extremo 2A	0.213	-66.466	0.596	-9.8984	0.1392	-80.6254
2967	1	Extremo 2A	0.213	-58.282	0.596	-9.8984	-0.1587	-49.4384
2968	0	Extremo 1A	0.14	62.449	0.653	0.4248	0.2027	-52.2212
2968	0.5	Extremo 1A	0.14	70.633	0.653	0.4248	-0.1238	-85.4916
2968	1	Extremo 1A	0.14	78.817	0.653	0.4248	-0.4502	-122.854
2968	0	Extremo 2A	-0.042	60.304	0.12	3.9042	0.0259	-50.2166
2968	0.5	Extremo 2A	-0.042	68.489	0.12	3.9042	-0.0341	-82.4149
2968	1	Extremo 2A	-0.042	76.673	0.12	3.9042	-0.0942	-118.705
2970	0	Extremo 1A	-0.94	-71.775	4.069	-14.6503	2.9958	-108.344
2970	0.5	Extremo 1A	-0.94	-63.591	4.069	-14.6503	0.9614	-74.5029
2970	1	Extremo 1A	-0.94	-55.406	4.069	-14.6503	-1.0729	-44.7536
2970	0	Extremo 2A	0.156	-74.552	0.443	-6.9706	0.3228	-115.076
2970	0.5	Extremo 2A	0.156	-66.367	0.443	-6.9706	0.1013	-79.8465
2970	1	Extremo 2A	0.156	-58.183	0.443	-6.9706	-0.1202	-48.7088
2971	0	Extremo 1A	0.064	62.99	0.743	1.9746	0.2346	-52.4409
2971	0.5	Extremo 1A	0.064	71.174	0.743	1.9746	-0.1368	-85.982
2971	1	Extremo 1A	0.064	79.359	0.743	1.9746	-0.5082	-123.615
2971	0	Extremo 2A	-0.031	60.453	0.087	2.4619	0.0171	-50.2179
2971	0.5	Extremo 2A	-0.031	68.637	0.087	2.4619	-0.0263	-82.4903
2971	1	Extremo 2A	-0.031	76.821	0.087	2.4619	-0.0697	-118.855
2973	0	Extremo 1A	-0.51	-60.305	7.37	-5.8735	5.2698	-96.8594
2973	0.5	Extremo 1A	-0.51	-52.12	7.37	-5.8735	1.5846	-68.7532
2973	1	Extremo 1A	-0.51	-43.936	7.37	-5.8735	-2.1005	-44.7392
2973	0	Extremo 2A	0.115	-74.523	0.332	-3.6802	0.2404	-114.757
2973	0.5	Extremo 2A	0.115	-66.338	0.332	-3.6802	0.0744	-79.542
2973	1	Extremo 2A	0.115	-58.154	0.332	-3.6802	-0.0916	-48.4189
2974	0	Extremo 1A	-0.058	62.96	0.745	3.7812	0.2346	-52.3884
2974	0.5	Extremo 1A	-0.058	71.144	0.745	3.7812	-0.1379	-85.9143
2974	1	Extremo 1A	-0.058	79.328	0.745	3.7812	-0.5105	-123.532
2974	0	Extremo 2A	-0.024	60.478	0.062	1.1137	0.011	-50.2458
2974	0.5	Extremo 2A	-0.024	68.663	0.062	1.1137	-0.0201	-82.5311
2974	1	Extremo 2A	-0.024	76.847	0.062	1.1137	-0.0512	-118.909
2976	0	Extremo 1A	0.474	-60.296	7.385	4.072	5.2803	-96.8604
2976	0.5	Extremo 1A	0.474	-52.111	7.385	4.072	1.5877	-68.7587
2976	1	Extremo 1A	0.474	-43.927	7.385	4.072	-2.1049	-44.7493
2976	0	Extremo 2A	0.084	-74.467	0.251	-0.2587	0.1804	-114.615
2976	0.5	Extremo 2A	0.084	-66.283	0.251	-0.2587	0.055	-79.4271
2976	1	Extremo 2A	0.084	-58.098	0.251	-0.2587	-0.0704	-48.332
2977	0	Extremo 1A	-0.133	62.371	0.66	5.2709	0.203	-52.0434
2977	0.5	Extremo 1A	-0.133	70.555	0.66	5.2709	-0.1271	-85.2751
2977	1	Extremo 1A	-0.133	78.74	0.66	5.2709	-0.4573	-122.599
2977	0	Extremo 2A	-0.018	60.416	0.044	-0.2016	0.0067	-50.2983
2977	0.5	Extremo 2A	-0.018	68.601	0.044	-0.2016	-0.0153	-82.5524
2977	1	Extremo 2A	-0.018	76.785	0.044	-0.2016	-0.0374	-118.899
2979	0	Extremo 1A	0.901	-71.787	4.114	12.7921	3.0282	-108.406
2979	0.5	Extremo 1A	0.901	-63.603	4.114	12.7921	0.9709	-74.5589
2979	1	Extremo 1A	0.901	-55.418	4.114	12.7921	-1.0863	-44.8036
2979	0	Extremo 2A	0.062	-74.395	0.191	3.1813	0.1367	-114.635
2979	0.5	Extremo 2A	0.062	-66.211	0.191	3.1813	0.0411	-79.4835
2979	1	Extremo 2A	0.062	-58.026	0.191	3.1813	-0.0545	-48.4244
2980	0	Extremo 1A	-0.136	61.605	0.538	6.0639	0.1578	-51.587
2980	0.5	Extremo 1A	-0.136	69.79	0.538	6.0639	-0.1113	-84.4357
2980	1	Extremo 1A	-0.136	77.974	0.538	6.0639	-0.3804	-121.377
2980	0	Extremo 2A	-0.013	60.426	0.031	-1.4366	0.0038	-50.4799
2980	0.5	Extremo 2A	-0.013	68.611	0.031	-1.4366	-0.0117	-82.7392
2980	1	Extremo 2A	-0.013	76.795	0.031	-1.4366	-0.0272	-119.091
2982	0	Extremo 1A	0.717	-73.952	2.567	18.8206	1.9027	-113.116
2982	0.5	Extremo 1A	0.717	-65.767	2.567	18.8206	0.6191	-78.1864
2982	1	Extremo 1A	0.717	-57.583	2.567	18.8206	-0.6646	-47.3489
2982	0	Extremo 2A	0.045	-74.461	0.148	6.414	0.1049	-115.12
2982	0.5	Extremo 2A	0.045	-66.277	0.148	6.414	0.0311	-79.9354
2982	1	Extremo 2A	0.045	-58.093	0.148	6.414	-0.0426	-48.843
2983	0	Extremo 1A	-0.107	61.351	0.425	6.2548	0.1163	-51.2371
2983	0.5	Extremo 1A	-0.107	69.536	0.425	6.2548	-0.0961	-83.9589
2983	1	Extremo 1A	-0.107	77.72	0.425	6.2548	-0.3085	-120.773
2983	0	Extremo 2A	-0.00901	61.021	0.022	-2.2756	0.0018	-50.8908
2983	0.5	Extremo 2A	-0.00901	69.206	0.022	-2.2756	-0.009	-83.4475
2983	1	Extremo 2A	-0.00901	77.39	0.022	-2.2756	-0.0198	-120.096
2985	0	Extremo 1A	0.503	-75.665	1.76	21.9172	1.3057	-117.38
2985	0.5	Extremo 1A	0.503	-67.481	1.76	21.9172	0.4254	-81.5935
2985	1	Extremo 1A	0.503	-59.296	1.76	21.9172	-0.4548	-49.8993
2985	0	Extremo 2A	0.032	-75.294	0.116	8.8285	0.082	-116.937

2985	0.5	Extremo 2A	0.032	-67.109	0.116	8.8285	0.024	-81.3361
2985	1	Extremo 2A	0.032	-58.925	0.116	8.8285	-0.034	-49.8275
2986	0	Extremo 1A	-0.071	62.791	0.339	6.3217	0.0856	-50.6237
2986	0.5	Extremo 1A	-0.071	70.975	0.339	6.3217	-0.0837	-84.0652
2986	1	Extremo 1A	-0.071	79.16	0.339	6.3217	-0.253	-121.599
2986	0	Extremo 2A	-0.00559	63.352	0.015	-2.1885	0.00064	-51.0666
2986	0.5	Extremo 2A	-0.00559	71.536	0.015	-2.1885	-0.007	-84.7885
2986	1	Extremo 2A	-0.00559	79.72	0.015	-2.1885	-0.0147	-122.603
2988	0	Extremo 1A	0.338	-80.369	1.305	21.4576	0.9655	-124.605
2988	0.5	Extremo 1A	0.338	-72.184	1.305	21.4576	0.3128	-86.467
2988	1	Extremo 1A	0.338	-64	1.305	21.4576	-0.3399	-52.4209
2988	0	Extremo 2A	0.022	-78.612	0.093	9.3208	0.0657	-121.5
2988	0.5	Extremo 2A	0.022	-70.427	0.093	9.3208	0.0191	-84.2404
2988	1	Extremo 2A	0.022	-62.243	0.093	9.3208	-0.0276	-51.0729
2989	0	Extremo 1A	-0.035	66.558	0.283	5.6983	0.0655	-47.553
2989	0.5	Extremo 1A	-0.035	74.743	0.283	5.6983	-0.0758	-82.8781
2989	1	Extremo 1A	-0.035	82.927	0.283	5.6983	-0.2171	-122.296
2989	0	Extremo 2A	-0.00205	68.112	0.012	-1.8049	0.00015	-48.7381
2989	0.5	Extremo 2A	-0.00205	76.297	0.012	-1.8049	-0.0059	-84.8402
2989	1	Extremo 2A	-0.00205	84.481	0.012	-1.8049	-0.0119	-125.035
2991	0	Extremo 1A	0.228	-90.636	1.026	17.7663	0.7611	-134.469
2991	0.5	Extremo 1A	0.228	-82.451	1.026	17.7663	0.248	-91.1972
2991	1	Extremo 1A	0.228	-74.267	1.026	17.7663	-0.2651	-52.0177
2991	0	Extremo 2A	0.016	-86.313	0.077	7.9798	0.0543	-128.042
2991	0.5	Extremo 2A	0.016	-78.129	0.077	7.9798	0.016	-86.9316
2991	1	Extremo 2A	0.016	-69.944	0.077	7.9798	-0.0223	-49.9134
2992	0	Extremo 1A	-0.037	65.265	0.245	-0.7299	0.0468	-40.3517
2992	0.5	Extremo 1A	-0.037	73.45	0.245	-0.7299	-0.0759	-75.0305
2992	1	Extremo 1A	-0.037	81.634	0.245	-0.7299	-0.1986	-113.802
2992	0	Extremo 2A	-0.00032	67.906	0.011	-6.4694	-0.00011	-42.1548
2992	0.5	Extremo 2A	-0.00032	76.09	0.011	-6.4694	-0.0056	-78.1538
2992	1	Extremo 2A	-0.00032	84.275	0.011	-6.4694	-0.0111	-118.245
2994	0	Extremo 1A	0.255	-95.472	0.812	19.8064	0.6283	-132.811
2994	0.5	Extremo 1A	0.255	-87.287	0.812	19.8064	0.2221	-87.1216
2994	1	Extremo 1A	0.255	-79.103	0.812	19.8064	-0.1841	-45.5241
2994	0	Extremo 2A	0.02	-88.994	0.061	12.0565	0.0454	-124.448
2994	0.5	Extremo 2A	0.02	-80.809	0.061	12.0565	0.0147	-81.9975
2994	1	Extremo 2A	0.02	-72.625	0.061	12.0565	-0.016	-43.6388
2995	0	Extremo 1A	-0.273	53.258	0.189	-6.5924	0.0039	-42.2944
2995	0.5	Extremo 1A	-0.273	61.442	0.189	-6.5924	-0.0907	-70.9695
2995	1	Extremo 1A	-0.273	69.627	0.189	-6.5924	-0.1853	-103.737
2995	0	Extremo 2A	-0.015	55.746	0.00974	-10.3242	-0.002	-45.0106
2995	0.5	Extremo 2A	-0.015	63.93	0.00974	-10.3242	-0.0068	-74.9296
2995	1	Extremo 2A	-0.015	72.115	0.00974	-10.3242	-0.0117	-108.941
2997	0	Extremo 1A	0.891	-80.944	0.561	20.609	0.5297	-125.127
2997	0.5	Extremo 1A	0.891	-72.76	0.561	20.609	0.2494	-86.701
2997	1	Extremo 1A	0.891	-64.576	0.561	20.609	-0.0309	-52.3671
2997	0	Extremo 2A	0.065	-75.505	0.042	14.9457	0.0374	-115.659
2997	0.5	Extremo 2A	0.065	-67.321	0.042	14.9457	0.0165	-79.953
2997	1	Extremo 2A	0.065	-59.136	0.042	14.9457	-0.0044	-48.3388
2998	0	Extremo 1A	-37.627	217.672	-0.493	13.8002	-0.3811	48.3261
2998	0.5	Extremo 1A	-37.627	239.469	-0.493	13.8002	-0.1346	-65.9592
2998	1	Extremo 1A	-37.627	261.267	-0.493	13.8002	0.112	-191.143
2998	0	Extremo 2A	-37.627	217.672	-0.493	13.8002	-0.3811	48.3261
2998	0.5	Extremo 2A	-37.627	239.469	-0.493	13.8002	-0.1346	-65.9592
2998	1	Extremo 2A	-37.627	261.267	-0.493	13.8002	0.112	-191.143
2999	0	Extremo 1A	118.358	-435.109	-0.131	23.2979	-0.2958	-190.58
2999	0.5	Extremo 1A	118.358	-413.311	-0.131	23.2979	-0.2304	21.5248
2999	1	Extremo 1A	118.358	-391.514	-0.131	23.2979	-0.1649	222.731
2999	0	Extremo 2A	118.358	-435.109	-0.131	23.2979	-0.2958	-190.58
2999	0.5	Extremo 2A	118.358	-413.311	-0.131	23.2979	-0.2304	21.5248
2999	1	Extremo 2A	118.358	-391.514	-0.131	23.2979	-0.1649	222.731
3000	0	Extremo 1A	86.721	-187.116	0.135	23.6545	-0.3271	178.588
3000	0.5	Extremo 1A	86.721	-165.319	0.135	23.6545	-0.3944	266.696
3000	1	Extremo 1A	86.721	-143.521	0.135	23.6545	-0.4617	343.907
3000	0	Extremo 2A	86.721	-187.117	0.135	23.6545	-0.3271	178.588
3000	0.5	Extremo 2A	86.721	-165.319	0.135	23.6545	-0.3944	266.697
3000	1	Extremo 2A	86.721	-143.522	0.135	23.6545	-0.4617	343.907
3001	0	Extremo 1A	70.057	-65.309	0.203	15.8128	-0.4227	327.534
3001	0.5	Extremo 1A	70.057	-43.512	0.203	15.8128	-0.524	354.739
3001	1	Extremo 1A	70.057	-21.714	0.203	15.8128	-0.6253	371.045
3001	0	Extremo 2A	70.057	-65.309	0.203	15.8128	-0.4227	327.534
3001	0.5	Extremo 2A	70.057	-43.512	0.203	15.8128	-0.524	354.739
3001	1	Extremo 2A	70.057	-21.714	0.203	15.8128	-0.6253	371.045
3002	0	Extremo 1A	60.846	33.057	0.203	4.9536	-0.4982	365.762
3002	0.5	Extremo 1A	60.846	54.854	0.203	4.9536	-0.5995	343.785
3002	1	Extremo 1A	60.846	76.652	0.203	4.9536	-0.7008	310.908
3002	0	Extremo 2A	60.846	33.057	0.203	4.9536	-0.4982	365.762
3002	0.5	Extremo 2A	60.846	54.854	0.203	4.9536	-0.5995	343.785
3002	1	Extremo 2A	60.846	76.652	0.203	4.9536	-0.7008	310.908
3003	0	Extremo 1A	55.485	128.141	0.189	-6.728	-0.5468	307.56
3003	0.5	Extremo 1A	55.485	149.939	0.189	-6.728	-0.6412	238.04
3003	1	Extremo 1A	55.485	171.736	0.189	-6.728	-0.7355	157.621
3003	0	Extremo 2A	55.485	128.141	0.189	-6.728	-0.5468	307.56
3003	0.5	Extremo 2A	55.485	149.939	0.189	-6.728	-0.6412	238.04
3003	1	Extremo 2A	55.485	171.736	0.189	-6.728	-0.7355	157.621
3004	0	Extremo 1A	52.205	223.315	0.173	-18.9187	-0.5792	155.501
3004	0.5	Extremo 1A	52.205	245.113	0.173	-18.9187	-0.6658	38.3943
3004	1	Extremo 1A	52.205	266.91	0.173	-18.9187	-0.7524	-89.6114
3004	0	Extremo 2A	52.205	223.315	0.173	-18.9187	-0.5792	155.502
3004	0.5	Extremo 2A	52.205	245.113	0.173	-18.9187	-0.6658	38.3947
3004	1	Extremo 2A	52.205	266.91	0.173	-18.9187	-0.7524	-89.6111
3005	0	Extremo 1A	50.107	327.486	0.157	-30.0605	-0.603	-82.0241
3005	0.5	Extremo 1A	50.107	349.284	0.157	-30.0605	-0.6817	-251.217
3005	1	Extremo 1A	50.107	371.081	0.157	-30.0605	-0.7604	-431.308
3005	0	Extremo 2A	50.107	327.486	0.157	-30.0605	-0.603	-82.0237
3005	0.5	Extremo 2A	50.107	349.284	0.157	-30.0605	-0.6817	-251.216
3005	1	Extremo 2A	50.107	371.081	0.157	-30.0605	-0.7604	-431.307
3006	0	Extremo 1A	48.714	503.973	0.141	-32.6062	-0.6223	-383.925
3006	0.5	Extremo 1A	48.714	525.771	0.141	-32.6062	-0.6928	-641.361
3006	1	Extremo 1A	48.714	547.568	0.141	-32.6062	-0.7634	-909.696
3006	0	Extremo 2A	48.714	503.973	0.141	-32.6062	-0.6223	-383.925
3006	0.5	Extremo 2A	48.714	525.771	0.141	-32.6062	-0.6928	-641.36
3006	1	Extremo 2A	48.714	547.568	0.141	-32.6062	-0.7634	-909.695
3007	0	Extremo 1A	47.763	1074.14	0.125	-11.4211	-0.6387	-770.388
3007	0.5	Extremo 1A	47.763	1095.94	0.125	-11.4211	-0.701	-1312.91
3007	1	Extremo 1A	47.763	1117.74	0.125	-11.4211	-0.7634	-1866.33
3007	0	Extremo 2A	47.763	1074.14	0.125	-11.421	-0.6387	-770.388
3007	0.5	Extremo 2A	47.763	1095.94	0.125	-11.421	-0.701	-1312.91
3007	1	Extremo 2A	47.763	1117.74	0.125	-11.421	-0.7634	-1866.32
3008	0	Extremo 1A	47.1	-1222.91	0.109	30.2278	-0.653	-1865.87
3008	0.5	Extremo 1A	47.1	-1201.12	0.109	30.2278	-0.7073	-1259.86
3008	1	Extremo 1A	47.1	-1179.32	0.109	30.2278	-0.7615	-664.755
3008	0	Extremo 2A	47.1	-1222.91	0.109	30.2278	-0.653	-1865.87
3008	0.5	Extremo 2A	47.1	-1201.12	0.109	30.2278	-0.7073	-1259.86
3008	1	Extremo 2A	47.1	-1179.32	0.109	30.2278	-0.7615	-664.755
3009	0	Extremo 1A	46.63	-652.778	0.093	51.545	-0.6655	-803.136
3009	0.5	Extremo 1A	46.63	-630.981	0.093	51.545	-0.7121	-482.196
3009	1	Extremo 1A	46.63	-609.183	0.093	51.545	-0.7586	-172.155
3009	0	Extremo 2A	46.63	-652.778	0.093	51.545	-0.6655	-803.136
3009	0.5	Extremo 2A	46.63	-630.981	0.093	51.545	-0.7121	-482.196
3009	1	Extremo 2A	46.63	-609.183	0.093	51.545	-0.7586	-172.155
3010	0	Extremo 1A	46.293	-476.353	0.079	49.3027	-0.6763	-218.565
3010	0.5	Extremo 1A	46.293	-454.555	0.079	49.3027	-0.7158	14.1619
3010	1	Extremo 1A	46.293	-432.758	0.079	49.3027	-0.7553	235.99
3010	0	Extremo 2A	46.293	-476.353	0.079	49.3027	-0.6763	-218.565
3010	0.5	Extremo 2A	46.293	-454.555	0.079	49.3027	-0.7158	14.1621
3010	1	Extremo 2A	46.293	-432.758	0.079	49.3027	-0.7553	235.99
3011	0	Extremo 1A	46.049	-372.255	0.066	38.729	-0.6856	229.441
3011	0.5	Extremo 1A	46.049	-350.458	0.066	38.729	-0.7187	410.12
3011	1	Extremo 1A	46.049	-328.66	0.066	38.729	-0.7519	579.899
3011	0	Extremo 2A	46.049	-372.255	0.066	38.729	-0.6856	229.442
3011	0.5	Extremo 2A	46.049	-350.458	0.066	38.729	-0.7187	410.12
3011	1	Extremo 2A	46.049	-328.66	0.066	38.729	-0.7519	579.899
3012	0	Extremo 1A	45.871	-277.132	0.055	27.5227	-0.6934	583.034
3012	0.5	Extremo 1A	45.871	-255.334	0.055	27.5227	-0.721	716.151
3012	1	Extremo 1A	45.871	-233.537	0.055	27.5227	-0.7486	838.369
3012	0	Extremo 2A	45.871	-277.132	0.055	27.5227	-0.6934	583.034
3012	0.5	Extremo 2A	45.871	-255.334	0.055	27.5227	-0.721	716.151
3012	1	Extremo 2A	45.871	-233.537	0.055	27.5227	-0.7486	838.369
3013	0	Extremo 1A	45.741	-182.282	0.046	17.331	-0.7001	842.077
3013	0.5	Extremo 1A	45.741	-160.485	0.046	17.331	-0.7228	927.769
3013	1	Extremo 1A	45.741	-138.687	0.046	17.331	-0.7456	1002.56
3013	0	Extremo 2A	45.741	-182.282	0.046	17.331	-0.7001	842.077

3013	0.5	Extremo 2A	45.741	-160.485	0.046	17.331	-0.7228	927.768
3013	1	Extremo 2A	45.741	-138.687	0.046	17.331	-0.7456	1002.56
3014	0	Extremo 1A	45.646	-87.182	0.037	7.9113	-0.7056	1004.71
3014	0.5	Extremo 1A	45.646	-65.385	0.037	7.9113	-0.7242	1042.86
3014	1	Extremo 1A	45.646	-43.587	0.037	7.9113	-0.7429	1070.1
3014	0	Extremo 2A	45.646	-87.182	0.037	7.9113	-0.7056	1004.71
3014	0.5	Extremo 2A	45.646	-65.384	0.037	7.9113	-0.7242	1042.86
3014	1	Extremo 2A	45.646	-43.587	0.037	7.9113	-0.7429	1070.1
3015	0	Extremo 1A	45.575	8.014	0.03	-1.1777	-0.7101	1070.31
3015	0.5	Extremo 1A	45.575	29.811	0.03	-1.1777	-0.7254	1060.85
3015	1	Extremo 1A	45.575	51.609	0.03	-1.1777	-0.7406	1040.5
3015	0	Extremo 2A	45.575	8.014	0.03	-1.1777	-0.7101	1070.31
3015	0.5	Extremo 2A	45.575	29.811	0.03	-1.1777	-0.7254	1060.85
3015	1	Extremo 2A	45.575	51.609	0.03	-1.1777	-0.7406	1040.5
3016	0	Extremo 1A	45.523	103.233	0.025	-10.2837	-0.7139	1038.71
3016	0.5	Extremo 1A	45.523	125.03	0.025	-10.2837	-0.7263	981.649
3016	1	Extremo 1A	45.523	146.828	0.025	-10.2837	-0.7386	913.685
3016	0	Extremo 2A	45.523	103.233	0.025	-10.2837	-0.7139	1038.71
3016	0.5	Extremo 2A	45.523	125.03	0.025	-10.2837	-0.7263	981.648
3016	1	Extremo 2A	45.523	146.828	0.025	-10.2837	-0.7386	913.684
3017	0	Extremo 1A	45.484	198.396	0.02	-19.7697	-0.717	909.959
3017	0.5	Extremo 1A	45.484	220.193	0.02	-19.7697	-0.7269	805.312
3017	1	Extremo 1A	45.484	241.991	0.02	-19.7697	-0.7369	689.766
3017	0	Extremo 2A	45.484	198.396	0.02	-19.7697	-0.717	909.958
3017	0.5	Extremo 2A	45.484	220.193	0.02	-19.7697	-0.7269	805.311
3017	1	Extremo 2A	45.484	241.991	0.02	-19.7697	-0.7369	689.765
3018	0	Extremo 1A	45.456	293.332	0.016	-30.1159	-0.7194	684.545
3018	0.5	Extremo 1A	45.456	315.13	0.016	-30.1159	-0.7275	532.429
3018	1	Extremo 1A	45.456	336.927	0.016	-30.1159	-0.7355	369.415
3018	0	Extremo 2A	45.456	293.332	0.016	-30.1159	-0.7194	684.544
3018	0.5	Extremo 2A	45.456	315.13	0.016	-30.1159	-0.7275	532.428
3018	1	Extremo 2A	45.456	336.927	0.016	-30.1159	-0.7355	369.414
3019	0	Extremo 1A	45.434	388.676	0.013	-41.5629	-0.7214	365.175
3019	0.5	Extremo 1A	45.434	410.474	0.013	-41.5629	-0.7279	165.387
3019	1	Extremo 1A	45.434	432.271	0.013	-41.5629	-0.7344	-45.2988
3019	0	Extremo 2A	45.434	388.676	0.013	-41.5629	-0.7214	365.174
3019	0.5	Extremo 2A	45.434	410.474	0.013	-41.5629	-0.7279	165.386
3019	1	Extremo 2A	45.434	432.271	0.013	-41.5629	-0.7344	-45.3001
3020	0	Extremo 1A	45.419	494.59	0.01	-52.1368	-0.7231	-37.9649
3020	0.5	Extremo 1A	45.419	516.388	0.01	-52.1368	-0.7283	-290.709
3020	1	Extremo 1A	45.419	538.185	0.01	-52.1368	-0.7334	-554.353
3020	0	Extremo 2A	45.419	494.59	0.01	-52.1368	-0.7231	-37.9662
3020	0.5	Extremo 2A	45.419	516.388	0.01	-52.1368	-0.7283	-290.711
3020	1	Extremo 2A	45.419	538.185	0.01	-52.1368	-0.7334	-554.354
3021	0	Extremo 1A	45.407	684.829	0.00829	-52.819	-0.7244	-500.362
3021	0.5	Extremo 1A	45.407	706.627	0.00829	-52.819	-0.7285	-848.226
3021	1	Extremo 1A	45.407	728.424	0.00829	-52.819	-0.7327	-1206.99
3021	0	Extremo 2A	45.407	684.829	0.00829	-52.819	-0.7244	-500.363
3021	0.5	Extremo 2A	45.407	706.627	0.00829	-52.819	-0.7285	-848.227
3021	1	Extremo 2A	45.407	728.424	0.00829	-52.819	-0.7327	-1206.99
3022	0	Extremo 1A	45.398	1333.39	0.00662	-25.8715	-0.7254	-1045.77
3022	0.5	Extremo 1A	45.398	1355.19	0.00662	-25.8715	-0.7287	-1717.92
3022	1	Extremo 1A	45.398	1376.98	0.00662	-25.8715	-0.732	-2400.96
3022	0	Extremo 2A	45.398	1333.39	0.00662	-25.8715	-0.7254	-1045.77
3022	0.5	Extremo 2A	45.398	1355.19	0.00662	-25.8715	-0.7287	-1717.92
3022	1	Extremo 2A	45.398	1376.98	0.00662	-25.8715	-0.732	-2400.96
3023	0	Extremo 1A	45.391	-1355.07	0.00527	24.8713	-0.7262	-2401.23
3023	0.5	Extremo 1A	45.391	-1333.28	0.00527	24.8713	-0.7289	-1729.14
3023	1	Extremo 1A	45.391	-1311.48	0.00527	24.8713	-0.7315	-1067.95
3023	0	Extremo 2A	45.391	-1355.07	0.00527	24.8713	-0.7262	-2401.23
3023	0.5	Extremo 2A	45.391	-1333.28	0.00527	24.8713	-0.7289	-1729.14
3023	1	Extremo 2A	45.391	-1311.48	0.00527	24.8713	-0.7315	-1067.96
3024	0	Extremo 1A	45.386	-706.512	0.00419	51.8179	-0.7269	-1229.71
3024	0.5	Extremo 1A	45.386	-684.715	0.00419	51.8179	-0.729	-881.905
3024	1	Extremo 1A	45.386	-662.917	0.00419	51.8179	-0.7311	-544.997
3024	0	Extremo 2A	45.386	-706.513	0.00419	51.8179	-0.7269	-1229.71
3024	0.5	Extremo 2A	45.386	-684.715	0.00419	51.8179	-0.729	-881.906
3024	1	Extremo 2A	45.386	-662.918	0.00419	51.8179	-0.7311	-544.998
3025	0	Extremo 1A	45.383	-516.271	0.00333	51.1338	-0.7274	-599.53
3025	0.5	Extremo 1A	45.383	-494.474	0.00333	51.1338	-0.7291	-346.843
3025	1	Extremo 1A	45.383	-472.676	0.00333	51.1338	-0.7308	-105.056
3025	0	Extremo 2A	45.383	-516.272	0.00333	51.1338	-0.7274	-599.53
3025	0.5	Extremo 2A	45.383	-494.474	0.00333	51.1338	-0.7291	-346.844
3025	1	Extremo 2A	45.383	-472.677	0.00333	51.1338	-0.7308	-105.056
3026	0	Extremo 1A	45.38	-410.353	0.00264	40.5571	-0.7279	-112.932
3026	0.5	Extremo 1A	45.38	-388.556	0.00264	40.5571	-0.7292	86.7955
3026	1	Extremo 1A	45.38	-366.758	0.00264	40.5571	-0.7305	275.624
3026	0	Extremo 2A	45.38	-410.354	0.00264	40.5571	-0.7279	-112.932
3026	0.5	Extremo 2A	45.38	-388.556	0.00264	40.5571	-0.7292	86.7957
3026	1	Extremo 2A	45.38	-366.759	0.00264	40.5571	-0.7305	275.624
3027	0	Extremo 1A	45.378	-315.001	0.0021	29.1068	-0.7282	279.322
3027	0.5	Extremo 1A	45.378	-293.204	0.0021	29.1068	-0.7292	431.373
3027	1	Extremo 1A	45.378	-271.406	0.0021	29.1068	-0.7303	572.526
3027	0	Extremo 2A	45.378	-315.002	0.0021	29.1069	-0.7282	279.322
3027	0.5	Extremo 2A	45.378	-293.204	0.0021	29.1069	-0.7292	431.374
3027	1	Extremo 2A	45.378	-271.407	0.0021	29.1069	-0.7303	572.527
3028	0	Extremo 1A	45.376	-220.05	0.00166	18.757	-0.7285	577.203
3028	0.5	Extremo 1A	45.376	-198.253	0.00166	18.757	-0.7293	681.779
3028	1	Extremo 1A	45.376	-176.455	0.00166	18.757	-0.7301	775.456
3028	0	Extremo 2A	45.376	-220.051	0.00166	18.757	-0.7285	577.204
3028	0.5	Extremo 2A	45.376	-198.254	0.00166	18.757	-0.7293	681.781
3028	1	Extremo 2A	45.376	-176.456	0.00166	18.757	-0.7301	775.458
3029	0	Extremo 1A	45.375	-124.861	0.00131	9.2678	-0.7287	778.637
3029	0.5	Extremo 1A	45.375	-103.064	0.00131	9.2678	-0.7293	835.618
3029	1	Extremo 1A	45.375	-81.266	0.00131	9.2678	-0.73	881.701
3029	0	Extremo 2A	45.375	-124.862	0.00131	9.2678	-0.7287	778.639
3029	0.5	Extremo 2A	45.375	-103.064	0.00131	9.2678	-0.7293	835.62
3029	1	Extremo 2A	45.375	-81.267	0.00131	9.2678	-0.73	881.703
3030	0	Extremo 1A	45.374	-29.597	0.00104	0.1586	-0.7288	882.934
3030	0.5	Extremo 1A	45.374	-7.8	0.00104	0.1586	-0.7293	892.283
3030	1	Extremo 1A	45.374	13.998	0.00104	0.1586	-0.7299	890.733
3030	0	Extremo 2A	45.374	-29.598	0.00104	0.1586	-0.7288	882.936
3030	0.5	Extremo 2A	45.374	-7.8	0.00104	0.1586	-0.7293	892.285
3030	1	Extremo 2A	45.374	13.997	0.00104	0.1586	-0.7299	890.736
3031	0	Extremo 1A	45.374	65.671	0.00082	-8.937	-0.729	889.971
3031	0.5	Extremo 1A	45.374	87.469	0.00082	-8.937	-0.7294	851.686
3031	1	Extremo 1A	45.374	109.266	0.00082	-8.937	-0.7298	802.502
3031	0	Extremo 2A	45.374	65.671	0.00082	-8.937	-0.729	889.974
3031	0.5	Extremo 2A	45.374	87.468	0.00082	-8.937	-0.7294	851.689
3031	1	Extremo 2A	45.374	109.266	0.00082	-8.937	-0.7298	802.505
3032	0	Extremo 1A	45.373	160.88	0.00065	-18.3779	-0.7291	799.796
3032	0.5	Extremo 1A	45.373	182.677	0.00065	-18.3779	-0.7294	713.907
3032	1	Extremo 1A	45.373	204.475	0.00065	-18.3779	-0.7297	617.119
3032	0	Extremo 2A	45.373	160.879	0.00065	-18.3779	-0.7291	799.799
3032	0.5	Extremo 2A	45.373	182.677	0.00065	-18.3779	-0.7294	713.91
3032	1	Extremo 2A	45.373	204.474	0.00065	-18.3779	-0.7297	617.123
3033	0	Extremo 1A	45.373	255.882	0.00051	-28.6223	-0.7291	612.911
3033	0.5	Extremo 1A	45.373	277.679	0.00051	-28.6223	-0.7294	479.521
3033	1	Extremo 1A	45.373	299.477	0.00051	-28.6223	-0.7297	335.232
3033	0	Extremo 2A	45.373	255.881	0.00051	-28.6222	-0.7291	612.915
3033	0.5	Extremo 2A	45.373	277.679	0.00051	-28.6222	-0.7294	479.525
3033	1	Extremo 2A	45.373	299.476	0.00051	-28.6222	-0.7297	335.236
3034	0	Extremo 1A	45.373	351.318	0.0004	-39.8841	-0.7292	331.925
3034	0.5	Extremo 1A	45.373	373.115	0.0004	-39.8841	-0.7294	150.817
3034	1	Extremo 1A	45.373	394.913	0.0004	-39.8841	-0.7296	-41.1905
3034	0	Extremo 2A	45.373	351.317	0.0004	-39.8841	-0.7292	331.929
3034	0.5	Extremo 2A	45.373	373.115	0.0004	-39.8841	-0.7294	150.821
3034	1	Extremo 2A	45.373	394.912	0.0004	-39.8841	-0.7296	-41.1855
3035	0	Extremo 1A	45.372	457.066	0.00032	-50.2215	-0.7293	-33.3356
3035	0.5	Extremo 1A	45.372	478.863	0.00032	-50.2215	-0.7294	-267.318
3035	1	Extremo 1A	45.372	500.661	0.00032	-50.2215	-0.7296	-512.199
3035	0	Extremo 2A	45.372	457.065	0.00032	-50.2214	-0.7293	-33.3306
3035	0.5	Extremo 2A	45.372	478.863	0.00032	-50.2214	-0.7294	-267.313
3035	1	Extremo 2A	45.372	500.66	0.00032	-50.2214	-0.7296	-512.194
3036	0	Extremo 1A	45.372	644.62	0.00025	-50.8648	-0.7293	-459.209
3036	0.5	Extremo 1A	45.372	666.417	0.00025	-50.8648	-0.7294	-786.968
3036	1	Extremo 1A	45.372	688.215	0.00025	-50.8648	-0.7295	-1125.63
3036	0	Extremo 2A	45.372	644.619	0.00025	-50.8648	-0.7293	-459.203
3036	0.5	Extremo 2A	45.372	666.417	0.00025	-50.8648	-0.7294	-786.962
3036	1	Extremo 2A	45.372	688.214	0.00025	-50.8648	-0.7295	-1125.62
3037	0	Extremo 1A	45.372	1276.4	0.0002	-24.6244	-0.7293	-968.857
3037	0.5	Extremo 1A	45.372	1298.19	0.0002	-24.6244	-0.7294	-1612.5
3037	1	Extremo 1A	45.372	1319.99	0.0002	-24.6244	-0.7295	-2267.05
3037	0	Extremo 2A	45.372	1276.39	0.0002	-24.6244	-0.7293	-968.852

3037	0.5	Extremo 2A	45.372	1298.19	0.0002	-24.6244	-0.7294	-1612.5
3037	1	Extremo 2A	45.372	1319.99	0.0002	-24.6244	-0.7295	-2267.04
3038	0	Extremo 1A	45.372	-1325.74	0.00016	24.7223	-0.7294	-2266.97
3038	0.5	Extremo 1A	45.372	-1303.94	0.00016	24.7223	-0.7294	-1609.55
3038	1	Extremo 1A	45.372	-1282.15	0.00016	24.7223	-0.7295	-963.026
3038	0	Extremo 2A	45.372	-1325.74	0.00016	24.7223	-0.7294	-2266.96
3038	0.5	Extremo 2A	45.372	-1303.94	0.00016	24.7223	-0.7294	-1609.54
3038	1	Extremo 2A	45.372	-1282.14	0.00016	24.7223	-0.7295	-963.022
3039	0	Extremo 1A	45.372	-693.964	0.00012	50.9631	-0.7294	-1119.63
3039	0.5	Extremo 1A	45.372	-672.166	0.00012	50.9631	-0.7294	-778.098
3039	1	Extremo 1A	45.372	-650.369	0.00012	50.9631	-0.7295	-447.465
3039	0	Extremo 2A	45.372	-693.961	0.00012	50.963	-0.7294	-1119.63
3039	0.5	Extremo 2A	45.372	-672.164	0.00012	50.963	-0.7294	-778.095
3039	1	Extremo 2A	45.372	-650.366	0.00012	50.963	-0.7295	-447.462
3040	0	Extremo 1A	45.372	-506.41	9.7E-05	50.3205	-0.7294	-500.29
3040	0.5	Extremo 1A	45.372	-484.612	9.7E-05	50.3205	-0.7294	-252.535
3040	1	Extremo 1A	45.372	-462.815	9.7E-05	50.3205	-0.7295	-15.678
3040	0	Extremo 2A	45.372	-506.408	9.7E-05	50.3204	-0.7294	-500.288
3040	0.5	Extremo 2A	45.372	-484.61	9.7E-05	50.3204	-0.7294	-252.533
3040	1	Extremo 2A	45.372	-462.813	9.7E-05	50.3204	-0.7295	-15.6778
3041	0	Extremo 1A	45.372	-400.662	7.7E-05	39.9845	-0.7294	-23.368
3041	0.5	Extremo 1A	45.372	-378.864	7.7E-05	39.9845	-0.7294	171.513
3041	1	Extremo 1A	45.372	-357.067	7.7E-05	39.9845	-0.7295	355.496
3041	0	Extremo 2A	45.372	-400.659	7.7E-05	39.9845	-0.7294	-23.3677
3041	0.5	Extremo 2A	45.372	-378.862	7.7E-05	39.9845	-0.7294	171.513
3041	1	Extremo 2A	45.372	-357.064	7.7E-05	39.9845	-0.7295	355.494
3042	0	Extremo 1A	45.372	-305.226	6E-05	28.7249	-0.7294	358.969
3042	0.5	Extremo 1A	45.372	-283.428	6E-05	28.7249	-0.7294	506.132
3042	1	Extremo 1A	45.372	-261.631	6E-05	28.7249	-0.7295	642.397
3042	0	Extremo 2A	45.372	-305.224	6E-05	28.7249	-0.7294	358.967
3042	0.5	Extremo 2A	45.372	-283.426	6E-05	28.7249	-0.7294	506.129
3042	1	Extremo 2A	45.372	-261.629	6E-05	28.7249	-0.7295	642.393
3043	0	Extremo 1A	45.372	-210.224	4.7E-05	18.4842	-0.7294	646.771
3043	0.5	Extremo 1A	45.372	-188.427	4.7E-05	18.4842	-0.7294	746.434
3043	1	Extremo 1A	45.372	-166.629	4.7E-05	18.4842	-0.7295	835.198
3043	0	Extremo 2A	45.372	-210.222	4.7E-05	18.4842	-0.7294	646.767
3043	0.5	Extremo 2A	45.372	-188.425	4.7E-05	18.4842	-0.7294	746.429
3043	1	Extremo 2A	45.372	-166.627	4.7E-05	18.4842	-0.7295	835.192
3044	0	Extremo 1A	45.372	-115.017	3.7E-05	9.0494	-0.7294	838.071
3044	0.5	Extremo 1A	45.372	-93.219	3.7E-05	9.0494	-0.7294	890.13
3044	1	Extremo 1A	45.372	-71.422	3.7E-05	9.0494	-0.7295	931.29
3044	0	Extremo 2A	45.372	-115.015	3.7E-05	9.0494	-0.7294	838.065
3044	0.5	Extremo 2A	45.372	-93.217	3.7E-05	9.0494	-0.7294	890.123
3044	1	Extremo 2A	45.372	-71.42	3.7E-05	9.0494	-0.7295	931.282
3045	0	Extremo 1A	45.372	-19.748	2.9E-05	-0.0354	-0.7294	932.223
3045	0.5	Extremo 1A	45.372	2.049	2.9E-05	-0.0354	-0.7294	936.648
3045	1	Extremo 1A	45.372	23.847	2.9E-05	-0.0354	-0.7295	930.174
3045	0	Extremo 2A	45.372	-19.746	2.9E-05	-0.0355	-0.7294	932.214
3045	0.5	Extremo 2A	45.372	2.051	2.9E-05	-0.0355	-0.7294	936.638
3045	1	Extremo 2A	45.372	23.849	2.9E-05	-0.0355	-0.7295	930.163
3046	0	Extremo 1A	45.372	75.519	2.3E-05	-9.1243	-0.7294	929.115
3046	0.5	Extremo 1A	45.372	97.316	2.3E-05	-9.1243	-0.7294	885.906
3046	1	Extremo 1A	45.372	119.114	2.3E-05	-9.1243	-0.7295	831.799
3046	0	Extremo 2A	45.372	75.521	2.3E-05	-9.1244	-0.7294	929.104
3046	0.5	Extremo 2A	45.372	97.318	2.3E-05	-9.1244	-0.7294	885.895
3046	1	Extremo 2A	45.372	119.116	2.3E-05	-9.1244	-0.7295	831.786
3047	0	Extremo 1A	45.372	170.72	1.8E-05	-18.5733	-0.7294	828.798
3047	0.5	Extremo 1A	45.372	192.517	1.8E-05	-18.5733	-0.7294	737.989
3047	1	Extremo 1A	45.372	214.315	1.8E-05	-18.5733	-0.7295	636.281
3047	0	Extremo 2A	45.372	170.722	1.8E-05	-18.5734	-0.7294	828.785
3047	0.5	Extremo 2A	45.372	192.519	1.8E-05	-18.5734	-0.7294	737.975
3047	1	Extremo 2A	45.372	214.317	1.8E-05	-18.5734	-0.7295	636.266
3048	0	Extremo 1A	45.372	265.704	1.4E-05	-28.8451	-0.7294	631.78
3048	0.5	Extremo 1A	45.372	287.502	1.4E-05	-28.8451	-0.7294	493.479
3048	1	Extremo 1A	45.372	309.299	1.4E-05	-28.8451	-0.7295	344.279
3048	0	Extremo 2A	45.372	265.706	1.4E-05	-28.8452	-0.7294	631.765
3048	0.5	Extremo 2A	45.372	287.504	1.4E-05	-28.8452	-0.7294	493.463
3048	1	Extremo 2A	45.372	309.301	1.4E-05	-28.8452	-0.7295	344.262
3049	0	Extremo 1A	45.372	361.111	1.1E-05	-40.1605	-0.7294	340.699
3049	0.5	Extremo 1A	45.372	382.908	1.1E-05	-40.1605	-0.7294	154.695
3049	1	Extremo 1A	45.372	404.706	1.1E-05	-40.1605	-0.7295	-42.2089
3049	0	Extremo 2A	45.372	361.113	1.1E-05	-40.1607	-0.7294	340.682
3049	0.5	Extremo 2A	45.372	382.91	1.1E-05	-40.1607	-0.7294	154.677
3049	1	Extremo 2A	45.372	404.708	1.1E-05	-40.1607	-0.7295	-42.2279
3050	0	Extremo 1A	45.372	466.89	8.9E-06	-50.571	-0.7294	-34.5191
3050	0.5	Extremo 1A	45.372	488.688	8.9E-06	-50.571	-0.7294	-273.414
3050	1	Extremo 1A	45.372	510.485	8.9E-06	-50.571	-0.7294	-523.207
3050	0	Extremo 2A	45.372	466.893	8.9E-06	-50.5712	-0.7294	-34.5381
3050	0.5	Extremo 2A	45.372	488.69	8.9E-06	-50.5712	-0.7294	-273.434
3050	1	Extremo 2A	45.372	510.488	8.9E-06	-50.5712	-0.7294	-523.228
3051	0	Extremo 1A	45.372	655.121	7E-06	-51.2442	-0.7294	-469.986
3051	0.5	Extremo 1A	45.372	676.919	7E-06	-51.2442	-0.7294	-802.996
3051	1	Extremo 1A	45.372	698.716	7E-06	-51.2442	-0.7294	-1146.9
3051	0	Extremo 2A	45.372	655.124	7E-06	-51.2444	-0.7294	-470.007
3051	0.5	Extremo 2A	45.372	676.922	7E-06	-51.2444	-0.7294	-803.018
3051	1	Extremo 2A	45.372	698.719	7E-06	-51.2444	-0.7294	-1146.93
3052	0	Extremo 1A	45.372	1291.22	5.5E-06	-24.8482	-0.7294	-989.007
3052	0.5	Extremo 1A	45.372	1313.02	5.5E-06	-24.8482	-0.7294	-1640.07
3052	1	Extremo 1A	45.372	1334.82	5.5E-06	-24.8482	-0.7294	-2302.03
3052	0	Extremo 2A	45.372	1291.23	5.5E-06	-24.8483	-0.7294	-989.029
3052	0.5	Extremo 2A	45.372	1313.03	5.5E-06	-24.8483	-0.7294	-1640.09
3052	1	Extremo 2A	45.372	1334.82	5.5E-06	-24.8483	-0.7294	-2302.05
3053	0	Extremo 1A	45.372	-1333.3	4.3E-06	24.8293	-0.7294	-2302.05
3053	0.5	Extremo 1A	45.372	-1311.5	4.3E-06	24.8293	-0.7294	-1640.85
3053	1	Extremo 1A	45.372	-1289.7	4.3E-06	24.8293	-0.7294	-990.551
3053	0	Extremo 2A	45.372	-1333.31	4.3E-06	24.8294	-0.7294	-2302.08
3053	0.5	Extremo 2A	45.372	-1311.51	4.3E-06	24.8294	-0.7294	-1640.87
3053	1	Extremo 2A	45.372	-1289.71	4.3E-06	24.8294	-0.7294	-990.567
3054	0	Extremo 1A	45.372	-697.195	3.4E-06	51.2252	-0.7294	-1148.49
3054	0.5	Extremo 1A	45.372	-675.398	3.4E-06	51.2252	-0.7294	-805.345
3054	1	Extremo 1A	45.372	-653.6	3.4E-06	51.2252	-0.7294	-473.095
3054	0	Extremo 2A	45.372	-697.204	3.4E-06	51.2255	-0.7294	-1148.51
3054	0.5	Extremo 2A	45.372	-675.406	3.4E-06	51.2255	-0.7294	-805.358
3054	1	Extremo 2A	45.372	-653.609	3.4E-06	51.2255	-0.7294	-473.104
3055	0	Extremo 1A	45.372	-508.964	2.7E-06	50.5518	-0.7294	-526.361
3055	0.5	Extremo 1A	45.372	-487.167	2.7E-06	50.5518	-0.7294	-277.328
3055	1	Extremo 1A	45.372	-465.369	2.7E-06	50.5518	-0.7294	-39.1943
3055	0	Extremo 2A	45.372	-508.972	2.7E-06	50.5521	-0.7294	-526.37
3055	0.5	Extremo 2A	45.372	-487.175	2.7E-06	50.5521	-0.7294	-277.333
3055	1	Extremo 2A	45.372	-465.377	2.7E-06	50.5521	-0.7294	-39.1953
3056	0	Extremo 1A	45.372	-403.184	2.1E-06	40.1409	-0.7294	-46.9287
3056	0.5	Extremo 1A	45.372	-381.387	2.1E-06	40.1409	-0.7294	149.214
3056	1	Extremo 1A	45.372	-359.589	2.1E-06	40.1409	-0.7294	334.458
3056	0	Extremo 2A	45.372	-403.192	2.1E-06	40.1411	-0.7294	-46.9295
3056	0.5	Extremo 2A	45.372	-381.395	2.1E-06	40.1411	-0.7294	149.217
3056	1	Extremo 2A	45.372	-359.597	2.1E-06	40.1411	-0.7294	334.465
3057	0	Extremo 1A	45.372	-307.778	1.7E-06	28.8248	-0.7294	337.993
3057	0.5	Extremo 1A	45.372	-285.98	1.7E-06	28.8248	-0.7294	486.432
3057	1	Extremo 1A	45.372	-264.183	1.7E-06	28.8248	-0.7294	623.973
3057	0	Extremo 2A	45.372	-307.786	1.7E-06	28.825	-0.7294	338
3057	0.5	Extremo 2A	45.372	-285.988	1.7E-06	28.825	-0.7294	486.443
3057	1	Extremo 2A	45.372	-264.191	1.7E-06	28.825	-0.7294	623.988
3058	0	Extremo 1A	45.372	-212.793	1.3E-06	18.552	-0.7294	628.429
3058	0.5	Extremo 1A	45.372	-190.996	1.3E-06	18.552	-0.7294	729.376
3058	1	Extremo 1A	45.372	-169.198	1.3E-06	18.552	-0.7294	819.424
3058	0	Extremo 2A	45.372	-212.801	1.3E-06	18.5521	-0.7294	628.444
3058	0.5	Extremo 2A	45.372	-191.004	1.3E-06	18.5521	-0.7294	729.395
3058	1	Extremo 2A	45.372	-169.206	1.3E-06	18.5521	-0.7294	819.448
3059	0	Extremo 1A	45.372	-117.593	1E-06	9.1011	-0.7294	822.38
3059	0.5	Extremo 1A	45.372	-95.795	1E-06	9.1011	-0.7294	875.727
3059	1	Extremo 1A	45.372	-73.998	1E-06	9.1011	-0.7294	918.175
3059	0	Extremo 2A	45.372	-117.6	1E-06	9.1012	-0.7294	822.404
3059	0.5	Extremo 2A	45.372	-95.803	1E-06	9.1012	-0.7294	875.754
3059	1	Extremo 2A	45.372	-74.005	1E-06	9.1012	-0.7294	918.207
3060	0	Extremo 1A	45.372	-22.326	8E-07	0.0089	-0.7294	919.188
3060	0.5	Extremo 1A	45.372	-0.529	8E-07	0.0089	-0.7294	924.901
3060	1	Extremo 1A	45.372	21.269	8E-07	0.0089	-0.7294	919.716
3060	0	Extremo 2A	45.372	-22.334	8E-07	0.009	-0.7294	919.219
3060	0.5	Extremo 2A	45.372	-0.537	8E-07	0.009	-0.7294	924.937
3060	1	Extremo 2A	45.372	21.261	8E-07	0.009	-0.7294	919.756
3061	0	Extremo 1A	45.372	72.941	6.3E-07	-9.0823	-0.7294	918.736
3061	0.5	Extremo 1A	45.372	94.738	6.3E-07	-9.0823	-0.7294	876.817
3061	1	Extremo 1A	45.372	116.536	6.3E-07	-9.0823	-0.7294	823.998
3061	0	Extremo 2A	45.372	72.933	6.3E-07	-9.0821	-0.7294	918.776

3061	0.5	Extremo 2A	45.372	94.73	6.3E-07	-9.0821	-0.7294	876.861
3061	1	Extremo 2A	45.372	116.528	6.3E-07	-9.0821	-0.7294	824.046
3062	0	Extremo 1A	45.372	168.143	5E-07	-18.5294	-0.7294	821.076
3062	0.5	Extremo 1A	45.372	189.941	5E-07	-18.5294	-0.7294	731.555
3062	1	Extremo 1A	45.372	211.738	5E-07	-18.5294	-0.7294	631.135
3062	0	Extremo 2A	45.372	168.135	5E-07	-18.5292	-0.7294	821.124
3062	0.5	Extremo 2A	45.372	189.933	5E-07	-18.5292	-0.7294	731.607
3062	1	Extremo 2A	45.372	211.73	5E-07	-18.5292	-0.7294	631.191
3063	0	Extremo 1A	45.372	263.132	3.9E-07	-28.7941	-0.7294	626.712
3063	0.5	Extremo 1A	45.372	284.93	3.9E-07	-28.7941	-0.7294	489.696
3063	1	Extremo 1A	45.372	306.727	3.9E-07	-28.7941	-0.7294	341.782
3063	0	Extremo 2A	45.372	263.124	3.9E-07	-28.7938	-0.7294	626.768
3063	0.5	Extremo 2A	45.372	284.922	3.9E-07	-28.7938	-0.7294	489.757
3063	1	Extremo 2A	45.372	306.719	3.9E-07	-28.7938	-0.7294	341.846
3064	0	Extremo 1A	45.372	358.547	3.1E-07	-40.0956	-0.7294	338.276
3064	0.5	Extremo 1A	45.372	380.344	3.1E-07	-40.0956	-0.7294	153.553
3064	1	Extremo 1A	45.372	402.142	3.1E-07	-40.0956	-0.7294	-42.0687
3064	0	Extremo 2A	45.372	358.539	3.1E-07	-40.0951	-0.7294	338.34
3064	0.5	Extremo 2A	45.372	380.336	3.1E-07	-40.0951	-0.7294	153.621
3064	1	Extremo 2A	45.372	402.134	3.1E-07	-40.0951	-0.7294	-41.9965
3065	0	Extremo 1A	45.372	464.319	2.4E-07	-50.4867	-0.7294	-34.334
3065	0.5	Extremo 1A	45.372	486.116	2.4E-07	-50.4867	-0.7294	-271.943
3065	1	Extremo 1A	45.372	507.914	2.4E-07	-50.4867	-0.7294	-520.45
3065	0	Extremo 2A	45.372	464.311	2.4E-07	-50.486	-0.7294	-34.262
3065	0.5	Extremo 2A	45.372	486.108	2.4E-07	-50.486	-0.7294	-271.867
3065	1	Extremo 2A	45.372	507.906	2.4E-07	-50.486	-0.7294	-520.37
3066	0	Extremo 1A	45.372	652.376	1.9E-07	-51.1514	-0.7294	-467.286
3066	0.5	Extremo 1A	45.372	674.174	1.9E-07	-51.1514	-0.7294	-798.924
3066	1	Extremo 1A	45.372	695.971	1.9E-07	-51.1514	-0.7294	-1141.46
3066	0	Extremo 2A	45.372	652.366	1.9E-07	-51.1506	-0.7294	-467.208
3066	0.5	Extremo 2A	45.372	674.164	1.9E-07	-51.1506	-0.7294	-798.84
3066	1	Extremo 2A	45.372	695.961	1.9E-07	-51.1506	-0.7294	-1141.37
3067	0	Extremo 1A	45.372	1287.36	1.5E-07	-24.7943	-0.7294	-983.851
3067	0.5	Extremo 1A	45.372	1309.16	1.5E-07	-24.7943	-0.7294	-1632.98
3067	1	Extremo 1A	45.372	1330.96	1.5E-07	-24.7943	-0.7294	-2293.01
3067	0	Extremo 2A	45.372	1287.34	1.5E-07	-24.7939	-0.7294	-983.767
3067	0.5	Extremo 2A	45.372	1309.14	1.5E-07	-24.7939	-0.7294	-1632.89
3067	1	Extremo 2A	45.372	1330.94	1.5E-07	-24.7939	-0.7294	-2292.9
3068	0	Extremo 1A	45.372	-1331.39	1.2E-07	24.7993	-0.7294	-2293.01
3068	0.5	Extremo 1A	45.372	-1309.59	1.2E-07	24.7993	-0.7294	-1632.76
3068	1	Extremo 1A	45.372	-1287.8	1.2E-07	24.7993	-0.7294	-983.413
3068	0	Extremo 2A	45.372	-1331.35	1.2E-07	24.7987	-0.7294	-2292.9
3068	0.5	Extremo 2A	45.372	-1309.55	1.2E-07	24.7987	-0.7294	-1632.68
3068	1	Extremo 2A	45.372	-1287.75	1.2E-07	24.7987	-0.7294	-983.351
3069	0	Extremo 1A	45.372	-696.403	9.3E-08	51.1565	-0.7294	-1141.01
3069	0.5	Extremo 1A	45.372	-674.605	9.3E-08	51.1565	-0.7294	-798.258
3069	1	Extremo 1A	45.372	-652.808	9.3E-08	51.1565	-0.7294	-466.404
3069	0	Extremo 2A	45.372	-696.371	9.2E-08	51.1554	-0.7294	-1140.94
3069	0.5	Extremo 2A	45.372	-674.573	9.2E-08	51.1554	-0.7294	-798.208
3069	1	Extremo 2A	45.372	-652.776	9.2E-08	51.1554	-0.7294	-466.371
3070	0	Extremo 1A	45.372	-508.345	7.3E-08	50.4919	-0.7294	-519.556
3070	0.5	Extremo 1A	45.372	-486.548	7.3E-08	50.4919	-0.7294	-270.833
3070	1	Extremo 1A	45.372	-464.75	7.3E-08	50.4919	-0.7294	-33.008
3070	0	Extremo 2A	45.372	-508.315	7.2E-08	50.4909	-0.7294	-519.522
3070	0.5	Extremo 2A	45.372	-486.518	7.2E-08	50.4909	-0.7294	-270.814
3070	1	Extremo 2A	45.372	-464.72	7.2E-08	50.4909	-0.7294	-33.0043
3071	0	Extremo 1A	45.372	-402.573	5.8E-08	40.1008	-0.7294	-40.73
3071	0.5	Extremo 1A	45.372	-380.776	5.8E-08	40.1008	-0.7294	155.107
3071	1	Extremo 1A	45.372	-358.978	5.8E-08	40.1008	-0.7294	340.046
3071	0	Extremo 2A	45.372	-402.543	5.7E-08	40.1001	-0.7294	-40.7268
3071	0.5	Extremo 2A	45.372	-380.746	5.7E-08	40.1001	-0.7294	155.095
3071	1	Extremo 2A	45.372	-358.948	5.7E-08	40.1001	-0.7294	340.019
3072	0	Extremo 1A	45.372	-307.159	4.5E-08	28.7996	-0.7294	343.565
3072	0.5	Extremo 1A	45.372	-285.361	4.5E-08	28.7996	-0.7294	491.695
3072	1	Extremo 1A	45.372	-263.564	4.5E-08	28.7996	-0.7294	628.926
3072	0	Extremo 2A	45.372	-307.129	4.4E-08	28.799	-0.7294	343.537
3072	0.5	Extremo 2A	45.372	-285.331	4.4E-08	28.799	-0.7294	491.652
3072	1	Extremo 2A	45.372	-263.534	4.4E-08	28.799	-0.7294	628.869
3073	0	Extremo 1A	45.372	-212.17	3.6E-08	18.5352	-0.7294	633.362
3073	0.5	Extremo 1A	45.372	-190.372	3.6E-08	18.5352	-0.7294	733.997
3073	1	Extremo 1A	45.372	-168.575	3.6E-08	18.5352	-0.7294	823.734
3073	0	Extremo 2A	45.372	-212.14	3.4E-08	18.5347	-0.7294	633.303
3073	0.5	Extremo 2A	45.372	-190.342	3.4E-08	18.5347	-0.7294	733.924
3073	1	Extremo 2A	45.372	-168.545	3.4E-08	18.5347	-0.7294	823.645
3074	0	Extremo 1A	45.372	-116.967	2.8E-08	9.0886	-0.7294	826.67
3074	0.5	Extremo 1A	45.372	-95.17	2.8E-08	9.0886	-0.7294	879.704
3074	1	Extremo 1A	45.372	-73.372	2.8E-08	9.0886	-0.7294	921.839
3074	0	Extremo 2A	45.372	-116.937	2.6E-08	9.0881	-0.7294	826.58
3074	0.5	Extremo 2A	45.372	-95.139	2.6E-08	9.0881	-0.7294	879.599
3074	1	Extremo 2A	45.372	-73.342	2.6E-08	9.0881	-0.7294	921.719
3075	0	Extremo 1A	45.372	-21.7	2.2E-08	-0.0016	-0.7294	922.832
3075	0.5	Extremo 1A	45.372	0.097	2.2E-08	-0.0016	-0.7294	928.233
3075	1	Extremo 1A	45.372	21.895	2.2E-08	-0.0016	-0.7294	922.735
3075	0	Extremo 2A	45.372	-21.67	2E-08	-0.0021	-0.7294	922.711
3075	0.5	Extremo 2A	45.372	0.128	2E-08	-0.0021	-0.7294	928.097
3075	1	Extremo 2A	45.372	21.925	2E-08	-0.0021	-0.7294	922.584
3076	0	Extremo 1A	45.372	73.567	1.7E-08	-9.092	-0.7294	921.736
3076	0.5	Extremo 1A	45.372	95.364	1.7E-08	-9.092	-0.7294	879.503
3076	1	Extremo 1A	45.372	117.162	1.7E-08	-9.092	-0.7294	826.371
3076	0	Extremo 2A	45.372	73.597	1.4E-08	-9.0926	-0.7294	921.584
3076	0.5	Extremo 2A	45.372	95.394	1.4E-08	-9.0926	-0.7294	879.336
3076	1	Extremo 2A	45.372	117.192	1.4E-08	-9.0926	-0.7294	826.189
3077	0	Extremo 1A	45.372	168.769	1.4E-08	-18.5393	-0.7294	823.43
3077	0.5	Extremo 1A	45.372	190.567	1.4E-08	-18.5393	-0.7294	733.596
3077	1	Extremo 1A	45.372	212.364	1.4E-08	-18.5393	-0.7294	632.863
3077	0	Extremo 2A	45.372	168.799	9.5E-09	-18.5401	-0.7294	823.247
3077	0.5	Extremo 2A	45.372	190.597	9.5E-09	-18.5401	-0.7294	733.398
3077	1	Extremo 2A	45.372	212.394	9.5E-09	-18.5401	-0.7294	632.65
3078	0	Extremo 1A	45.372	263.757	1.1E-08	-28.8052	-0.7294	628.421
3078	0.5	Extremo 1A	45.372	285.555	1.1E-08	-28.8052	-0.7294	491.093
3078	1	Extremo 1A	45.372	307.352	1.1E-08	-28.8052	-0.7294	342.867
3078	0	Extremo 2A	45.372	263.787	5.3E-09	-28.8064	-0.7294	628.207
3078	0.5	Extremo 2A	45.372	285.585	5.3E-09	-28.8064	-0.7294	490.865
3078	1	Extremo 2A	45.372	307.382	5.3E-09	-28.8064	-0.7294	342.623
3079	0	Extremo 1A	45.372	359.17	8.2E-09	-40.1092	-0.7294	339.342
3079	0.5	Extremo 1A	45.372	380.968	8.2E-09	-40.1092	-0.7294	154.308
3079	1	Extremo 1A	45.372	402.765	8.2E-09	-40.1092	-0.7294	-41.6258
3079	0	Extremo 2A	45.372	359.2	1.4E-09	-40.111	-0.7294	339.098
3079	0.5	Extremo 2A	45.372	380.997	1.4E-09	-40.111	-0.7294	154.048
3079	1	Extremo 2A	45.372	402.795	1.4E-09	-40.111	-0.7294	-41.8998
3080	0	Extremo 1A	45.372	464.944	6.2E-09	-50.5039	-0.7294	-33.9039
3080	0.5	Extremo 1A	45.372	486.741	6.2E-09	-50.5039	-0.7294	-271.825
3080	1	Extremo 1A	45.372	508.539	6.2E-09	-50.5039	-0.7294	-520.645
3080	0	Extremo 2A	45.372	464.974	-2.5E-09	-50.5066	-0.7294	-34.1774
3080	0.5	Extremo 2A	45.372	486.771	-2.5E-09	-50.5066	-0.7294	-272.114
3080	1	Extremo 2A	45.372	508.569	-2.5E-09	-50.5066	-0.7294	-520.949
3081	0	Extremo 1A	45.372	653.033	4.5E-09	-51.1701	-0.7294	-467.475
3081	0.5	Extremo 1A	45.372	674.831	4.5E-09	-51.1701	-0.7294	-799.441
3081	1	Extremo 1A	45.372	696.628	4.5E-09	-51.1701	-0.7294	-1142.31
3081	0	Extremo 2A	45.372	653.071	-6.5E-09	-51.1732	-0.7294	-467.773
3081	0.5	Extremo 2A	45.372	674.868	-6.5E-09	-51.1732	-0.7294	-799.758
3081	1	Extremo 2A	45.372	696.666	-6.5E-09	-51.1732	-0.7294	-1142.64
3082	0	Extremo 1A	45.372	1288.23	3E-09	-24.8059	-0.7294	-984.648
3082	0.5	Extremo 1A	45.372	1310.02	3E-09	-24.8059	-0.7294	-1634.21
3082	1	Extremo 1A	45.372	1331.82	3E-09	-24.8059	-0.7294	-2294.67
3082	0	Extremo 2A	45.372	1288.31	-1.1E-08	-24.8072	-0.7294	-984.968
3082	0.5	Extremo 2A	45.372	1310.11	-1.1E-08	-24.8072	-0.7294	-1634.57
3082	1	Extremo 2A	45.372	1331.91	-1.1E-08	-24.8072	-0.7294	-2295.08
3083	0	Extremo 1A	45.372	-1331.59	1.6E-09	24.8032	-0.7294	-2294.67
3083	0.5	Extremo 1A	45.372	-1309.79	1.6E-09	24.8032	-0.7294	-1634.33
3083	1	Extremo 1A	45.372	-1288	1.6E-09	24.8032	-0.7294	-984.882
3083	0	Extremo 2A	45.372	-1331.76	-1.6E-08	24.8056	-0.7294	-2295.08
3083	0.5	Extremo 2A	45.372	-1309.97	-1.6E-08	24.8056	-0.7294	-1634.65
3083	1	Extremo 2A	45.372	-1288.17	-1.6E-08	24.8056	-0.7294	-985.117
3084	0	Extremo 1A	45.372	-696.398	2.8E-10	51.1674	-0.7294	-1142.55
3084	0.5	Extremo 1A	45.372	-674.6	2.8E-10	51.1674	-0.7294	-799.797
3084	1	Extremo 1A	45.372	-652.803	2.8E-10	51.1674	-0.7294	-467.946
3084	0	Extremo 2A	45.372	-696.52	-2.2E-08	51.1716	-0.7294	-1142.79
3084	0.5	Extremo 2A	45.372	-674.722	-2.2E-08	51.1716	-0.7294	-799.984
3084	1	Extremo 2A	45.372	-652.925	-2.2E-08	51.1716	-0.7294	-468.072
3085	0	Extremo 1A	45.372	-508.308	-1.1E-09	50.5012	-0.7294	-521.123
3085	0.5	Extremo 1A	45.372	-486.511	-1.1E-09	50.5012	-0.7294	-272.419
3085	1	Extremo 1A	45.372	-464.713	-1.1E-09	50.5012	-0.7294	-34.6125
3085	0	Extremo 2A	45.372	-508.422	-3E-08	50.5049	-0.7294	-521.252

3085	0.5	Extremo 2A	45.372	-486.625	-3E-08	50.5049	-0.7294	-272.49
3085	1	Extremo 2A	45.372	-464.827	-3E-08	50.5049	-0.7294	-34.6267
3086	0	Extremo 1A	45.372	-402.535	-2.6E-09	40.1064	-0.7294	-42.3412
3086	0.5	Extremo 1A	45.372	-380.737	-2.6E-09	40.1064	-0.7294	153.477
3086	1	Extremo 1A	45.372	-358.94	-2.6E-09	40.1064	-0.7294	338.396
3086	0	Extremo 2A	45.372	-402.649	-3.9E-08	40.1093	-0.7294	-42.3534
3086	0.5	Extremo 2A	45.372	-380.851	-3.9E-08	40.1093	-0.7294	153.522
3086	1	Extremo 2A	45.372	-359.054	-3.9E-08	40.1093	-0.7294	338.498
3087	0	Extremo 1A	45.372	-307.122	-4.2E-09	28.8023	-0.7294	341.914
3087	0.5	Extremo 1A	45.372	-285.324	-4.2E-09	28.8023	-0.7294	490.025
3087	1	Extremo 1A	45.372	-263.527	-4.2E-09	28.8023	-0.7294	627.238
3087	0	Extremo 2A	45.372	-307.236	-5.1E-08	28.8046	-0.7294	342.019
3087	0.5	Extremo 2A	45.372	-285.438	-5.1E-08	28.8046	-0.7294	490.187
3087	1	Extremo 2A	45.372	-263.641	-5.1E-08	28.8046	-0.7294	627.457
3088	0	Extremo 1A	45.372	-212.134	-6.2E-09	18.5362	-0.7294	631.673
3088	0.5	Extremo 1A	45.372	-190.336	-6.2E-09	18.5362	-0.7294	732.29
3088	1	Extremo 1A	45.372	-168.539	-6.2E-09	18.5362	-0.7294	822.009
3088	0	Extremo 2A	45.372	-212.248	-6.6E-08	18.5382	-0.7294	631.896
3088	0.5	Extremo 2A	45.372	-190.451	-6.6E-08	18.5382	-0.7294	732.57
3088	1	Extremo 2A	45.372	-168.653	-6.6E-08	18.5382	-0.7294	822.346
3089	0	Extremo 1A	45.372	-116.931	-8.5E-09	9.0887	-0.7294	824.944
3089	0.5	Extremo 1A	45.372	-95.134	-8.5E-09	9.0887	-0.7294	877.96
3089	1	Extremo 1A	45.372	-73.336	-8.5E-09	9.0887	-0.7294	920.077
3089	0	Extremo 2A	45.372	-117.046	-8.4E-08	9.0905	-0.7294	825.284
3089	0.5	Extremo 2A	45.372	-95.248	-8.4E-08	9.0905	-0.7294	878.358
3089	1	Extremo 2A	45.372	-73.451	-8.4E-08	9.0905	-0.7294	920.532
3090	0	Extremo 1A	45.372	-21.664	-1.1E-08	-0.0022	-0.7294	921.069
3090	0.5	Extremo 1A	45.372	0.133	-1.1E-08	-0.0022	-0.7294	926.452
3090	1	Extremo 1A	45.372	21.931	-1.1E-08	-0.0022	-0.7294	920.936
3090	0	Extremo 2A	45.372	-21.779	-1.1E-07	-0.00028	-0.7294	921.528
3090	0.5	Extremo 2A	45.372	0.019	-1.1E-07	-0.00028	-0.7294	926.968
3090	1	Extremo 2A	45.372	21.816	-1.1E-07	-0.00028	-0.7294	921.509
3091	0	Extremo 1A	45.372	73.602	-1.5E-08	-9.0934	-0.7294	919.936
3091	0.5	Extremo 1A	45.372	95.4	-1.5E-08	-9.0934	-0.7294	877.686
3091	1	Extremo 1A	45.372	117.197	-1.5E-08	-9.0934	-0.7294	824.536
3091	0	Extremo 2A	45.372	73.488	-1.4E-07	-9.0911	-0.7294	920.513
3091	0.5	Extremo 2A	45.372	95.285	-1.4E-07	-9.0911	-0.7294	878.319
3091	1	Extremo 2A	45.372	117.083	-1.4E-07	-9.0911	-0.7294	825.227
3092	0	Extremo 1A	45.372	168.804	-2E-08	-18.5419	-0.7294	821.594
3092	0.5	Extremo 1A	45.372	190.602	-2E-08	-18.5419	-0.7294	731.742
3092	1	Extremo 1A	45.372	212.399	-2E-08	-18.5419	-0.7294	630.992
3092	0	Extremo 2A	45.372	168.69	-1.8E-07	-18.5389	-0.7294	822.288
3092	0.5	Extremo 2A	45.372	190.487	-1.8E-07	-18.5389	-0.7294	732.494
3092	1	Extremo 2A	45.372	212.285	-1.8E-07	-18.5389	-0.7294	631.801
3093	0	Extremo 1A	45.372	263.791	-2.5E-08	-28.81	-0.7294	626.549
3093	0.5	Extremo 1A	45.372	285.589	-2.5E-08	-28.81	-0.7294	489.204
3093	1	Extremo 1A	45.372	307.386	-2.5E-08	-28.81	-0.7294	340.96
3093	0	Extremo 2A	45.372	263.678	-2.2E-07	-28.8056	-0.7294	627.361
3093	0.5	Extremo 2A	45.372	285.475	-2.2E-07	-28.8056	-0.7294	490.073
3093	1	Extremo 2A	45.372	307.273	-2.2E-07	-28.8056	-0.7294	341.886
3094	0	Extremo 1A	45.372	359.202	-3.3E-08	-40.1178	-0.7294	337.436
3094	0.5	Extremo 1A	45.372	381	-3.3E-08	-40.1178	-0.7294	152.385
3094	1	Extremo 1A	45.372	402.797	-3.3E-08	-40.1178	-0.7294	-43.564
3094	0	Extremo 2A	45.372	359.09	-2.8E-07	-40.1109	-0.7294	338.364
3094	0.5	Extremo 2A	45.372	380.888	-2.8E-07	-40.1109	-0.7294	153.37
3094	1	Extremo 2A	45.372	402.685	-2.8E-07	-40.1109	-0.7294	-42.5235
3095	0	Extremo 1A	45.372	464.977	-4.2E-08	-50.5175	-0.7294	-35.8353
3095	0.5	Extremo 1A	45.372	486.775	-4.2E-08	-50.5175	-0.7294	-273.774
3095	1	Extremo 1A	45.372	508.572	-4.2E-08	-50.5175	-0.7294	-522.61
3095	0	Extremo 2A	45.372	464.864	-3.6E-07	-50.5073	-0.7294	-34.7969
3095	0.5	Extremo 2A	45.372	486.662	-3.6E-07	-50.5073	-0.7294	-272.678
3095	1	Extremo 2A	45.372	508.459	-3.6E-07	-50.5073	-0.7294	-521.458
3096	0	Extremo 1A	45.372	653.111	-5.4E-08	-51.186	-0.7294	-469.408
3096	0.5	Extremo 1A	45.372	674.908	-5.4E-08	-51.186	-0.7294	-801.413
3096	1	Extremo 1A	45.372	696.706	-5.4E-08	-51.186	-0.7294	-1144.32
3096	0	Extremo 2A	45.372	652.967	-4.6E-07	-51.1743	-0.7294	-468.275
3096	0.5	Extremo 2A	45.372	674.765	-4.6E-07	-51.1743	-0.7294	-800.208
3096	1	Extremo 2A	45.372	696.562	-4.6E-07	-51.1743	-0.7294	-1143.04
3097	0	Extremo 1A	45.372	1288.58	-6.9E-08	-24.812	-0.7294	-986.568
3097	0.5	Extremo 1A	45.372	1310.38	-6.9E-08	-24.812	-0.7294	-1636.31
3097	1	Extremo 1A	45.372	1332.18	-6.9E-08	-24.812	-0.7294	-2296.95
3097	0	Extremo 2A	45.372	1288.25	-5.9E-07	-24.8072	-0.7294	-985.351
3097	0.5	Extremo 2A	45.372	1310.05	-5.9E-07	-24.8072	-0.7294	-1634.92
3097	1	Extremo 2A	45.372	1331.84	-5.9E-07	-24.8072	-0.7294	-2295.4
3098	0	Extremo 1A	45.372	-1332.68	-8.8E-08	24.8181	-0.7294	-2296.94
3098	0.5	Extremo 1A	45.372	-1310.89	-8.8E-08	24.8181	-0.7294	-1636.05
3098	1	Extremo 1A	45.372	-1289.09	-8.8E-08	24.8181	-0.7294	-986.055
3098	0	Extremo 2A	45.372	-1332.03	-7.5E-07	24.8084	-0.7294	-2295.39
3098	0.5	Extremo 2A	45.372	-1310.23	-7.5E-07	24.8084	-0.7294	-1634.83
3098	1	Extremo 2A	45.372	-1288.43	-7.5E-07	24.8084	-0.7294	-985.164
3099	0	Extremo 1A	45.372	-697.21	-1.1E-07	51.1921	-0.7294	-1143.79
3099	0.5	Extremo 1A	45.372	-675.413	-1.1E-07	51.1921	-0.7294	-800.633
3099	1	Extremo 1A	45.372	-653.615	-1.1E-07	51.1921	-0.7294	-468.376
3099	0	Extremo 2A	45.372	-696.746	-9.5E-07	51.1756	-0.7294	-1142.85
3099	0.5	Extremo 2A	45.372	-674.949	-9.5E-07	51.1756	-0.7294	-799.924
3099	1	Extremo 2A	45.372	-653.151	-9.5E-07	51.1756	-0.7294	-467.899
3100	0	Extremo 1A	45.372	-509.077	-1.4E-07	50.5237	-0.7294	-521.564
3100	0.5	Extremo 1A	45.372	-487.28	-1.4E-07	50.5237	-0.7294	-272.475
3100	1	Extremo 1A	45.372	-465.482	-1.4E-07	50.5237	-0.7294	-34.2841
3100	0	Extremo 2A	45.372	-508.643	-1.2E-06	50.5085	-0.7294	-521.076
3100	0.5	Extremo 2A	45.372	-486.846	-1.2E-06	50.5085	-0.7294	-272.204
3100	1	Extremo 2A	45.372	-465.048	-1.2E-06	50.5085	-0.7294	-34.2302
3101	0	Extremo 1A	45.372	-403.302	-1.8E-07	40.1241	-0.7294	-41.9978
3101	0.5	Extremo 1A	45.372	-381.504	-1.8E-07	40.1241	-0.7294	154.204
3101	1	Extremo 1A	45.372	-359.707	-1.8E-07	40.1241	-0.7294	339.507
3101	0	Extremo 2A	45.372	-402.869	-1.5E-06	40.1122	-0.7294	-41.9514
3101	0.5	Extremo 2A	45.372	-381.072	-1.5E-06	40.1122	-0.7294	154.034
3101	1	Extremo 2A	45.372	-359.274	-1.5E-06	40.1122	-0.7294	339.12
3102	0	Extremo 1A	45.372	-307.891	-2.3E-07	28.8165	-0.7294	343.046
3102	0.5	Extremo 1A	45.372	-286.093	-2.3E-07	28.8165	-0.7294	491.542
3102	1	Extremo 1A	45.372	-264.296	-2.3E-07	28.8165	-0.7294	629.139
3102	0	Extremo 2A	45.372	-307.457	-2E-06	28.807	-0.7294	342.648
3102	0.5	Extremo 2A	45.372	-285.659	-2E-06	28.807	-0.7294	490.927
3102	1	Extremo 2A	45.372	-263.862	-2E-06	28.807	-0.7294	628.307
3103	0	Extremo 1A	45.372	-212.904	-2.9E-07	18.5488	-0.7294	633.598
3103	0.5	Extremo 1A	45.372	-191.106	-2.9E-07	18.5488	-0.7294	734.6
3103	1	Extremo 1A	45.372	-169.309	-2.9E-07	18.5488	-0.7294	824.704
3103	0	Extremo 2A	45.372	-212.469	-2.5E-06	18.5405	-0.7294	632.753
3103	0.5	Extremo 2A	45.372	-190.672	-2.5E-06	18.5405	-0.7294	733.538
3103	1	Extremo 2A	45.372	-168.874	-2.5E-06	18.5405	-0.7294	823.424
3104	0	Extremo 1A	45.372	-117.702	-3.7E-07	9.1009	-0.7294	827.662
3104	0.5	Extremo 1A	45.372	-95.904	-3.7E-07	9.1009	-0.7294	881.063
3104	1	Extremo 1A	45.372	-74.107	-3.7E-07	9.1009	-0.7294	923.566
3104	0	Extremo 2A	45.372	-117.267	-3.2E-06	9.093	-0.7294	826.369
3104	0.5	Extremo 2A	45.372	-95.469	-3.2E-06	9.093	-0.7294	879.553
3104	1	Extremo 2A	45.372	-73.672	-3.2E-06	9.093	-0.7294	921.839
3105	0	Extremo 1A	45.372	-22.435	-4.8E-07	0.0108	-0.7294	924.582
3105	0.5	Extremo 1A	45.372	-0.638	-4.8E-07	0.0108	-0.7294	930.35
3105	1	Extremo 1A	45.372	21.16	-4.8E-07	0.0108	-0.7294	925.219
3105	0	Extremo 2A	45.372	-22	-4E-06	0.0026	-0.7294	922.841
3105	0.5	Extremo 2A	45.372	-0.203	-4E-06	0.0026	-0.7294	928.392
3105	1	Extremo 2A	45.372	21.595	-4E-06	0.0026	-0.7294	923.044
3106	0	Extremo 1A	45.372	72.832	-6E-07	-9.078	-0.7294	924.243
3106	0.5	Extremo 1A	45.372	94.63	-6E-07	-9.078	-0.7294	882.377
3106	1	Extremo 1A	45.372	116.427	-6E-07	-9.078	-0.7294	829.613
3106	0	Extremo 2A	45.372	73.267	-5.1E-06	-9.0873	-0.7294	922.054
3106	0.5	Extremo 2A	45.372	95.065	-5.1E-06	-9.0873	-0.7294	879.971
3106	1	Extremo 2A	45.372	116.862	-5.1E-06	-9.0873	-0.7294	826.989
3107	0	Extremo 1A	45.372	168.036	-7.7E-07	-18.5214	-0.7294	826.695
3107	0.5	Extremo 1A	45.372	189.834	-7.7E-07	-18.5214	-0.7294	737.227
3107	1	Extremo 1A	45.372	211.631	-7.7E-07	-18.5214	-0.7294	636.861
3107	0	Extremo 2A	45.372	168.47	-6.5E-06	-18.5332	-0.7294	824.057
3107	0.5	Extremo 2A	45.372	190.268	-6.5E-06	-18.5332	-0.7294	734.373
3107	1	Extremo 2A	45.372	212.065	-6.5E-06	-18.5332	-0.7294	633.79
3108	0	Extremo 1A	45.372	263.029	-9.8E-07	-28.7794	-0.7294	632.442
3108	0.5	Extremo 1A	45.372	284.826	-9.8E-07	-28.7794	-0.7294	495.479
3108	1	Extremo 1A	45.372	306.624	-9.8E-07	-28.7794	-0.7294	347.616
3108	0	Extremo 2A	45.372	263.46	-8.2E-06	-28.7962	-0.7294	629.357
3108	0.5	Extremo 2A	45.372	285.258	-8.2E-06	-28.7962	-0.7294	492.178
3108	1	Extremo 2A	45.372	307.055	-8.2E-06	-28.7962	-0.7294	344.1
3109	0	Extremo 1A	45.372	358.449	-1.2E-06	-40.0693	-0.7294	344.11
3109	0.5	Extremo 1A	45.372	380.247	-1.2E-06	-40.0693	-0.7294	159.436
3109	1	Extremo 1A	45.372	402.044	-1.2E-06	-40.0693	-0.7294	-36.1369
3109	0	Extremo 2A	45.372	358.877	-1E-05	-40.0949	-0.7294	340.583

3109	0.5	Extremo 2A	45.372	380.674	-1E-05	-40.0949	-0.7294	155.696
3109	1	Extremo 2A	45.372	402.472	-1E-05	-40.0949	-0.7294	-40.0907
3110	0	Extremo 1A	45.372	464.215	-1.6E-06	-50.4454	-0.7294	-28.4229
3110	0.5	Extremo 1A	45.372	486.013	-1.6E-06	-50.4454	-0.7294	-265.98
3110	1	Extremo 1A	45.372	507.81	-1.6E-06	-50.4454	-0.7294	-514.436
3110	0	Extremo 2A	45.372	464.649	-1.3E-05	-50.4822	-0.7295	-32.3687
3110	0.5	Extremo 2A	45.372	486.447	-1.3E-05	-50.4822	-0.7294	-270.143
3110	1	Extremo 2A	45.372	508.244	-1.3E-05	-50.4822	-0.7294	-518.816
3111	0	Extremo 1A	45.372	652.138	-2E-06	-51.1037	-0.7294	-461.371
3111	0.5	Extremo 1A	45.372	673.936	-2E-06	-51.1037	-0.7294	-792.889
3111	1	Extremo 1A	45.372	695.733	-2E-06	-51.1037	-0.7294	-1135.31
3111	0	Extremo 2A	45.372	652.69	-1.7E-05	-51.1433	-0.7295	-465.676
3111	0.5	Extremo 2A	45.372	674.487	-1.7E-05	-51.1433	-0.7294	-797.47
3111	1	Extremo 2A	45.372	696.285	-1.7E-05	-51.1433	-0.7294	-1140.16
3112	0	Extremo 1A	45.372	1286.27	-2.6E-06	-24.7771	-0.7294	-977.975
3112	0.5	Extremo 1A	45.372	1308.07	-2.6E-06	-24.7771	-0.7294	-1626.56
3112	1	Extremo 1A	45.372	1329.86	-2.6E-06	-24.7771	-0.7294	-2286.04
3112	0	Extremo 2A	45.372	1287.56	-2.1E-05	-24.787	-0.7295	-982.605
3112	0.5	Extremo 2A	45.372	1309.35	-2.1E-05	-24.787	-0.7294	-1631.83
3112	1	Extremo 2A	45.372	1331.15	-2.1E-05	-24.787	-0.7294	-2291.96
3113	0	Extremo 1A	45.372	-1328.04	-3.3E-06	24.7512	-0.7294	-2286.07
3113	0.5	Extremo 1A	45.372	-1306.25	-3.3E-06	24.7512	-0.7294	-1627.49
3113	1	Extremo 1A	45.372	-1284.45	-3.3E-06	24.7512	-0.7294	-979.821
3113	0	Extremo 2A	45.372	-1330.55	-2.7E-05	24.8011	-0.7295	-2291.97
3113	0.5	Extremo 2A	45.372	-1308.75	-2.7E-05	24.8011	-0.7294	-1632.14
3113	1	Extremo 2A	45.372	-1286.96	-2.7E-05	24.8011	-0.7294	-983.214
3114	0	Extremo 1A	45.372	-693.914	-4.1E-06	51.0777	-0.7294	-1137.21
3114	0.5	Extremo 1A	45.372	-672.117	-4.1E-06	51.0777	-0.7294	-795.697
3114	1	Extremo 1A	45.372	-650.319	-4.1E-06	51.0777	-0.7294	-465.088
3114	0	Extremo 2A	45.372	-695.685	-3.4E-05	51.1573	-0.7295	-1140.79
3114	0.5	Extremo 2A	45.372	-673.888	-3.4E-05	51.1573	-0.7294	-798.4
3114	1	Extremo 2A	45.372	-652.09	-3.4E-05	51.1573	-0.7294	-466.906
3115	0	Extremo 1A	45.372	-505.991	-5.3E-06	50.4192	-0.7294	-518.206
3115	0.5	Extremo 1A	45.372	-484.193	-5.3E-06	50.4192	-0.7294	-270.66
3115	1	Extremo 1A	45.372	-462.396	-5.3E-06	50.4192	-0.7294	-34.013
3115	0	Extremo 2A	45.372	-507.645	-4.4E-05	50.496	-0.7295	-520.066
3115	0.5	Extremo 2A	45.372	-485.847	-4.4E-05	50.496	-0.7294	-271.693
3115	1	Extremo 2A	45.372	-464.05	-4.4E-05	50.496	-0.7294	-34.2187
3116	0	Extremo 1A	45.372	-400.225	-6.7E-06	40.0427	-0.7294	-41.7799
3116	0.5	Extremo 1A	45.372	-378.427	-6.7E-06	40.0427	-0.7294	152.883
3116	1	Extremo 1A	45.372	-356.63	-6.7E-06	40.0427	-0.7294	336.647
3116	0	Extremo 2A	45.372	-401.872	-5.5E-05	40.1085	-0.7295	-41.9613
3116	0.5	Extremo 2A	45.372	-380.075	-5.5E-05	40.1085	-0.7294	153.525
3116	1	Extremo 2A	45.372	-358.277	-5.5E-05	40.1085	-0.7294	338.113
3117	0	Extremo 1A	45.372	-304.804	-8.5E-06	28.7519	-0.7294	340.101
3117	0.5	Extremo 1A	45.372	-283.007	-8.5E-06	28.7519	-0.7294	487.053
3117	1	Extremo 1A	45.372	-261.209	-8.5E-06	28.7519	-0.7294	623.108
3117	0	Extremo 2A	45.372	-306.456	-7E-05	28.8093	-0.7295	341.609
3117	0.5	Extremo 2A	45.372	-284.659	-7E-05	28.8093	-0.7294	489.388
3117	1	Extremo 2A	45.372	-262.861	-7E-05	28.8093	-0.7294	626.268
3118	0	Extremo 1A	45.372	-209.812	-1.1E-05	18.4927	-0.7294	627.473
3118	0.5	Extremo 1A	45.372	-188.014	-1.1E-05	18.4927	-0.7294	726.93
3118	1	Extremo 1A	45.372	-166.217	-1.1E-05	18.4927	-0.7294	815.487
3118	0	Extremo 2A	45.372	-211.466	-8.9E-05	18.5455	-0.7295	630.679
3118	0.5	Extremo 2A	45.372	-189.669	-8.9E-05	18.5455	-0.7294	730.963
3118	1	Extremo 2A	45.372	-167.871	-8.9E-05	18.5455	-0.7294	820.348
3119	0	Extremo 1A	45.372	-114.608	-1.4E-05	9.0472	-0.7295	818.352
3119	0.5	Extremo 1A	45.372	-92.81	-1.4E-05	9.0472	-0.7294	870.206
3119	1	Extremo 1A	45.372	-71.013	-1.4E-05	9.0472	-0.7294	911.162
3119	0	Extremo 2A	45.372	-116.264	-0.00011	9.0981	-0.7295	823.259
3119	0.5	Extremo 2A	45.372	-94.467	-0.00011	9.0981	-0.7294	875.941
3119	1	Extremo 2A	45.372	-72.669	-0.00011	9.0981	-0.7294	917.725
3120	0	Extremo 1A	45.372	-19.341	-1.7E-05	-0.0454	-0.7295	912.084
3120	0.5	Extremo 1A	45.372	2.457	-1.7E-05	-0.0454	-0.7294	916.305
3120	1	Extremo 1A	45.372	24.254	-1.7E-05	-0.0454	-0.7294	909.627
3120	0	Extremo 2A	45.372	-20.999	-0.00014	0.0055	-0.7295	918.693
3120	0.5	Extremo 2A	45.372	0.799	-0.00014	0.0055	-0.7294	923.743
3120	1	Extremo 2A	45.372	22.596	-0.00014	0.0055	-0.7294	917.895
3121	0	Extremo 1A	45.372	75.924	-2.2E-05	-9.1425	-0.7295	908.556
3121	0.5	Extremo 1A	45.372	97.722	-2.2E-05	-9.1425	-0.7294	865.144
3121	1	Extremo 1A	45.372	119.519	-2.2E-05	-9.1425	-0.7294	810.834
3121	0	Extremo 2A	45.372	74.264	-0.00018	-9.0902	-0.7295	916.87
3121	0.5	Extremo 2A	45.372	96.062	-0.00018	-9.0902	-0.7294	874.288
3121	1	Extremo 2A	45.372	117.859	-0.00018	-9.0902	-0.7293	820.808
3122	0	Extremo 1A	45.372	171.121	-2.8E-05	-18.6044	-0.7295	807.818
3122	0.5	Extremo 1A	45.372	192.919	-2.8E-05	-18.6044	-0.7294	716.808
3122	1	Extremo 1A	45.372	214.716	-2.8E-05	-18.6044	-0.7294	614.899
3122	0	Extremo 2A	45.372	169.458	-0.00023	-18.5479	-0.7295	817.839
3122	0.5	Extremo 2A	45.372	191.256	-0.00023	-18.5479	-0.7294	727.66
3122	1	Extremo 2A	45.372	213.053	-0.00023	-18.5479	-0.7293	626.583
3123	0	Extremo 1A	45.372	266.095	-3.6E-05	-28.8993	-0.7295	610.383
3123	0.5	Extremo 1A	45.372	287.892	-3.6E-05	-28.8993	-0.7294	471.887
3123	1	Extremo 1A	45.372	309.69	-3.6E-05	-28.8993	-0.7294	322.491
3123	0	Extremo 2A	45.372	264.43	-0.00029	-28.834	-0.7296	622.112
3123	0.5	Extremo 2A	45.372	286.228	-0.00029	-28.834	-0.7294	484.448
3123	1	Extremo 2A	45.372	308.025	-0.00029	-28.834	-0.7293	335.885
3124	0	Extremo 1A	45.372	361.484	-4.5E-05	-40.254	-0.7295	318.912
3124	0.5	Extremo 1A	45.372	383.281	-4.5E-05	-40.254	-0.7294	132.721
3124	1	Extremo 1A	45.372	405.079	-4.5E-05	-40.254	-0.7294	-64.3694
3124	0	Extremo 2A	45.373	359.814	-0.00037	-40.1746	-0.7296	332.335
3124	0.5	Extremo 2A	45.373	381.611	-0.00037	-40.1746	-0.7294	146.979
3124	1	Extremo 2A	45.373	403.409	-0.00037	-40.1746	-0.7292	-49.2765
3125	0	Extremo 1A	45.372	467.294	-5.7E-05	-50.7144	-0.7295	-56.6
3125	0.5	Extremo 1A	45.372	489.091	-5.7E-05	-50.7144	-0.7294	-295.696
3125	1	Extremo 1A	45.372	510.889	-5.7E-05	-50.7144	-0.7294	-545.691
3125	0	Extremo 2A	45.373	465.558	-0.00046	-50.6272	-0.7296	-41.5516
3125	0.5	Extremo 2A	45.373	487.356	-0.00046	-50.6272	-0.7294	-279.78
3125	1	Extremo 2A	45.373	509.153	-0.00046	-50.6272	-0.7292	-528.907
3126	0	Extremo 1A	45.372	656.042	-7.3E-05	-51.4004	-0.7295	-492.095
3126	0.5	Extremo 1A	45.372	677.839	-7.3E-05	-51.4004	-0.7294	-825.565
3126	1	Extremo 1A	45.372	699.637	-7.3E-05	-51.4004	-0.7294	-1169.93
3126	0	Extremo 2A	45.373	653.774	-0.00059	-51.3619	-0.7297	-475.623
3126	0.5	Extremo 2A	45.373	675.571	-0.00059	-51.3619	-0.7294	-807.959
3126	1	Extremo 2A	45.373	697.369	-0.00059	-51.3619	-0.7291	-1151.19
3127	0	Extremo 1A	45.372	1295.39	-9.2E-05	-24.8736	-0.7295	-1010.99
3127	0.5	Extremo 1A	45.372	1317.19	-9.2E-05	-24.8736	-0.7294	-1664.14
3127	1	Extremo 1A	45.372	1338.99	-9.2E-05	-24.8736	-0.7294	-2328.18
3127	0	Extremo 2A	45.374	1290.06	-0.00074	-25.0387	-0.7297	-993.163
3127	0.5	Extremo 2A	45.374	1311.86	-0.00074	-25.0387	-0.7294	-1643.64
3127	1	Extremo 2A	45.374	1333.66	-0.00074	-25.0387	-0.729	-2305.02
3128	0	Extremo 1A	45.372	-1345.88	-0.00012	25.0679	-0.7295	-2328.09
3128	0.5	Extremo 1A	45.372	-1324.09	-0.00012	25.0679	-0.7294	-1660.6
3128	1	Extremo 1A	45.372	-1302.29	-0.00012	25.0679	-0.7294	-1004
3128	0	Extremo 2A	45.375	-1335.85	-0.00093	24.5671	-0.7298	-2304.96
3128	0.5	Extremo 2A	45.375	-1314.06	-0.00093	24.5671	-0.7293	-1642.48
3128	1	Extremo 2A	45.375	-1292.26	-0.00093	24.5671	-0.7289	-990.9
3129	0	Extremo 1A	45.372	-706.532	-0.00015	51.595	-0.7295	-1162.76
3129	0.5	Extremo 1A	45.372	-684.734	-0.00015	51.595	-0.7294	-814.943
3129	1	Extremo 1A	45.372	-662.937	-0.00015	51.595	-0.7294	-478.025
3129	0	Extremo 2A	45.376	-699.565	-0.00118	50.8909	-0.7299	-1148.8
3129	0.5	Extremo 2A	45.376	-677.767	-0.00118	50.8909	-0.7293	-804.466
3129	1	Extremo 2A	45.376	-655.97	-0.00118	50.8909	-0.7287	-471.031
3130	0	Extremo 1A	45.372	-517.783	-0.00019	50.9099	-0.7295	-531.435
3130	0.5	Extremo 1A	45.372	-495.986	-0.00019	50.9099	-0.7294	-277.992
3130	1	Extremo 1A	45.372	-474.188	-0.00019	50.9099	-0.7293	-35.4488
3130	0	Extremo 2A	45.377	-511.348	-0.00148	50.1576	-0.73	-524.183
3130	0.5	Extremo 2A	45.377	-489.55	-0.00148	50.1576	-0.7293	-273.959
3130	1	Extremo 2A	45.377	-467.753	-0.00148	50.1576	-0.7285	-34.6331
3131	0	Extremo 1A	45.372	-411.974	-0.00024	40.4508	-0.7295	-43.031
3131	0.5	Extremo 1A	45.372	-390.177	-0.00024	40.4508	-0.7294	157.507
3131	1	Extremo 1A	45.372	-368.379	-0.00024	40.4508	-0.7293	347.146
3131	0	Extremo 2A	45.379	-405.6	-0.00186	39.708	-0.7302	-42.2245
3131	0.5	Extremo 2A	45.379	-383.803	-0.00186	39.708	-0.7292	155.126
3131	1	Extremo 2A	45.379	-362.005	-0.00186	39.708	-0.7283	341.579
3132	0	Extremo 1A	45.372	-316.587	-0.0003	29.0981	-0.7296	350.912
3132	0.5	Extremo 1A	45.372	-294.789	-0.0003	29.0981	-0.7294	503.756
3132	1	Extremo 1A	45.372	-272.992	-0.0003	29.0981	-0.7293	645.701
3132	0	Extremo 2A	45.382	-310.212	-0.00234	28.3729	-0.7303	345.263
3132	0.5	Extremo 2A	45.382	-288.414	-0.00234	28.3729	-0.7292	494.919
3132	1	Extremo 2A	45.382	-266.617	-0.00234	28.3729	-0.728	633.677
3133	0	Extremo 1A	45.373	-221.615	-0.00038	18.8062	-0.7296	650.405
3133	0.5	Extremo 1A	45.373	-199.817	-0.00038	18.8062	-0.7294	755.763
3133	1	Extremo 1A	45.373	-178.02	-0.00038	18.8062	-0.7292	850.223
3133	0	Extremo 2A	45.385	-215.229	-0.00293	18.0974	-0.7306	638.285

3133	0.5	Extremo 2A	45.385	-193.432	-0.00293	18.0974	-0.7291	740.45
3133	1	Extremo 2A	45.385	-171.634	-0.00293	18.0974	-0.7276	831.716
3134	0	Extremo 1A	45.373	-126.422	-0.00048	9.3489	-0.7296	853.428
3134	0.5	Extremo 1A	45.373	-104.625	-0.00048	9.3489	-0.7294	911.19
3134	1	Extremo 1A	45.373	-82.827	-0.00048	9.3489	-0.7292	958.053
3134	0	Extremo 2A	45.389	-120.015	-0.00366	8.6599	-0.7308	834.826
3134	0.5	Extremo 2A	45.389	-98.217	-0.00366	8.6599	-0.729	889.384
3134	1	Extremo 2A	45.389	-76.42	-0.00366	8.6599	-0.7272	933.044
3135	0	Extremo 1A	45.373	-31.163	-0.00061	0.2594	-0.7297	959.316
3135	0.5	Extremo 1A	45.373	-9.365	-0.00061	0.2594	-0.7294	969.448
3135	1	Extremo 1A	45.373	12.432	-0.00061	0.2594	-0.7291	968.681
3135	0	Extremo 2A	45.395	-24.713	-0.00456	-0.3969	-0.7312	934.217
3135	0.5	Extremo 2A	45.395	-2.915	-0.00456	-0.3969	-0.7289	941.124
3135	1	Extremo 2A	45.395	18.882	-0.00456	-0.3969	-0.7266	937.132
3136	0	Extremo 1A	45.374	64.096	-0.00077	-8.8187	-0.7298	967.954
3136	0.5	Extremo 1A	45.374	85.894	-0.00077	-8.8187	-0.7294	930.456
3136	1	Extremo 1A	45.374	107.691	-0.00077	-8.8187	-0.729	882.06
3136	0	Extremo 2A	45.403	70.628	-0.00568	-9.4151	-0.7316	936.325
3136	0.5	Extremo 2A	45.403	92.425	-0.00568	-9.4151	-0.7287	895.562
3136	1	Extremo 2A	45.403	114.223	-0.00568	-9.4151	-0.7259	843.9
3137	0	Extremo 1A	45.375	159.293	-0.00097	-18.2352	-0.7298	879.394
3137	0.5	Extremo 1A	45.375	181.091	-0.00097	-18.2352	-0.7293	794.298
3137	1	Extremo 1A	45.375	202.888	-0.00097	-18.2352	-0.7289	698.303
3137	0	Extremo 2A	45.414	165.974	-0.00704	-18.7199	-0.732	841.172
3137	0.5	Extremo 2A	45.414	187.772	-0.00704	-18.7199	-0.7285	752.736
3137	1	Extremo 2A	45.414	209.569	-0.00704	-18.7199	-0.725	653.4
3138	0	Extremo 1A	45.376	254.286	-0.00122	-28.4371	-0.7299	694.128
3138	0.5	Extremo 1A	45.376	276.084	-0.00122	-28.4371	-0.7293	561.535
3138	1	Extremo 1A	45.376	297.881	-0.00122	-28.4371	-0.7287	418.044
3138	0	Extremo 2A	45.428	261.24	-0.00869	-28.7127	-0.7326	649.206
3138	0.5	Extremo 2A	45.428	283.038	-0.00869	-28.7127	-0.7283	513.137
3138	1	Extremo 2A	45.428	304.835	-0.00869	-28.7127	-0.7239	366.168
3139	0	Extremo 1A	45.377	349.699	-0.00153	-39.634	-0.73	414.701
3139	0.5	Extremo 1A	45.377	371.496	-0.00153	-39.634	-0.7293	234.403
3139	1	Extremo 1A	45.377	393.294	-0.00153	-39.634	-0.7285	43.2051
3139	0	Extremo 2A	45.448	357.165	-0.011	-39.5097	-0.7333	362.928
3139	0.5	Extremo 2A	45.448	378.963	-0.011	-39.5097	-0.7279	178.896
3139	1	Extremo 2A	45.448	400.76	-0.011	-39.5097	-0.7226	-16.0344
3140	0	Extremo 1A	45.379	455.159	-0.00193	-49.9345	-0.7302	50.6991
3140	0.5	Extremo 1A	45.379	476.957	-0.00193	-49.9345	-0.7292	-182.33
3140	1	Extremo 1A	45.379	498.754	-0.00193	-49.9345	-0.7283	-426.258
3140	0	Extremo 2A	45.474	463.806	-0.013	-49.0152	-0.7341	-8.0332
3140	0.5	Extremo 2A	45.474	485.604	-0.013	-49.0152	-0.7275	-245.386
3140	1	Extremo 2A	45.474	507.401	-0.013	-49.0152	-0.721	-493.637
3141	0	Extremo 1A	45.382	640.364	-0.00242	-50.7913	-0.7304	-374.806
3141	0.5	Extremo 1A	45.382	662.161	-0.00242	-50.7913	-0.7292	-700.438
3141	1	Extremo 1A	45.382	683.959	-0.00242	-50.7913	-0.728	-1036.97
3141	0	Extremo 2A	45.509	653.124	-0.016	-48.2699	-0.735	-440.356
3141	0.5	Extremo 2A	45.509	674.921	-0.016	-48.2699	-0.727	-772.367
3141	1	Extremo 2A	45.509	696.719	-0.016	-48.2699	-0.7191	-1115.28
3142	0	Extremo 1A	45.385	1258.62	-0.00303	-25.4469	-0.7306	-884.387
3142	0.5	Extremo 1A	45.385	1280.42	-0.00303	-25.4469	-0.7291	-1519.15
3142	1	Extremo 1A	45.385	1302.21	-0.00303	-25.4469	-0.7276	-2164.8
3142	0	Extremo 2A	45.557	1289.41	-0.019	-19.9876	-0.7359	-958.006
3142	0.5	Extremo 2A	45.557	1311.2	-0.019	-19.9876	-0.7264	-1608.16
3142	1	Extremo 2A	45.557	1333	-0.019	-19.9876	-0.7168	-2269.21
3143	0	Extremo 1A	45.39	-1275.73	-0.00379	22.4199	-0.7309	-2165.01
3143	0.5	Extremo 1A	45.39	-1253.93	-0.00379	22.4199	-0.729	-1532.59
3143	1	Extremo 1A	45.39	-1232.13	-0.00379	22.4199	-0.7271	-911.075
3143	0	Extremo 2A	45.621	-1325.99	-0.023	31.7432	-0.7369	-2270.11
3143	0.5	Extremo 2A	45.621	-1304.2	-0.023	31.7432	-0.7255	-1612.57
3143	1	Extremo 2A	45.621	-1282.4	-0.023	31.7432	-0.7141	-965.918
3144	0	Extremo 1A	45.396	-657.472	-0.00473	47.7646	-0.7312	-1064.06
3144	0.5	Extremo 1A	45.396	-635.674	-0.00473	47.7646	-0.7289	-740.774
3144	1	Extremo 1A	45.396	-613.877	-0.00473	47.7646	-0.7265	-428.387
3144	0	Extremo 2A	45.707	-689.723	-0.027	60.0234	-0.7379	-1125
3144	0.5	Extremo 2A	45.707	-667.925	-0.027	60.0234	-0.7245	-785.587
3144	1	Extremo 2A	45.707	-646.128	-0.027	60.0234	-0.7111	-457.074
3145	0	Extremo 1A	45.404	-472.26	-0.00589	46.9092	-0.7317	-480.243
3145	0.5	Extremo 1A	45.404	-450.463	-0.00589	46.9092	-0.7287	-249.563
3145	1	Extremo 1A	45.404	-428.665	-0.00589	46.9092	-0.7258	-29.7807
3145	0	Extremo 2A	45.823	-500.435	-0.031	60.7615	-0.7388	-512.165
3145	0.5	Extremo 2A	45.823	-478.638	-0.031	60.7615	-0.7232	-267.397
3145	1	Extremo 2A	45.823	-456.84	-0.031	60.7615	-0.7077	-33.5273
3146	0	Extremo 1A	45.415	-366.785	-0.00731	36.6133	-0.7322	-37.6785
3146	0.5	Extremo 1A	45.415	-344.987	-0.00731	36.6133	-0.7285	140.264
3146	1	Extremo 1A	45.415	-323.19	-0.00731	36.6133	-0.7248	307.309
3146	0	Extremo 2A	45.978	-393.854	-0.035	51.2363	-0.7392	-43.3415
3146	0.5	Extremo 2A	45.978	-372.056	-0.035	51.2363	-0.7217	148.136
3146	1	Extremo 2A	45.978	-350.259	-0.035	51.2363	-0.7042	328.715
3147	0	Extremo 1A	45.429	-271.343	-0.00904	25.4282	-0.7328	310.25
3147	0.5	Extremo 1A	45.429	-249.546	-0.00904	25.4282	-0.7282	440.472
3147	1	Extremo 1A	45.429	-227.748	-0.00904	25.4282	-0.7237	559.796
3147	0	Extremo 2A	46.185	-298.044	-0.038	40.3918	-0.7388	330.138
3147	0.5	Extremo 2A	46.185	-276.246	-0.038	40.3918	-0.7198	473.71
3147	1	Extremo 2A	46.185	-254.449	-0.038	40.3918	-0.7007	606.384
3148	0	Extremo 1A	45.449	-176.295	-0.011	15.2535	-0.7335	563.576
3148	0.5	Extremo 1A	45.449	-154.497	-0.011	15.2535	-0.7279	646.274
3148	1	Extremo 1A	45.449	-132.7	-0.011	15.2535	-0.7223	718.073
3148	0	Extremo 2A	46.456	-202.993	-0.039	30.2941	-0.7371	608.755
3148	0.5	Extremo 2A	46.456	-181.196	-0.039	30.2941	-0.7175	704.802
3148	1	Extremo 2A	46.456	-159.398	-0.039	30.2941	-0.6978	789.951
3149	0	Extremo 1A	45.475	-80.994	-0.014	5.895	-0.7343	720.354
3149	0.5	Extremo 1A	45.475	-59.197	-0.014	5.895	-0.7275	755.401
3149	1	Extremo 1A	45.475	-37.399	-0.014	5.895	-0.7207	779.55
3149	0	Extremo 2A	46.805	-108.047	-0.037	20.7699	-0.7331	790.846
3149	0.5	Extremo 2A	46.805	-86.25	-0.037	20.7699	-0.7147	839.42
3149	1	Extremo 2A	46.805	-64.452	-0.037	20.7699	-0.6963	877.096
3150	0	Extremo 1A	45.511	14.457	-0.017	-3.0669	-0.7352	779.909
3150	0.5	Extremo 1A	45.511	36.255	-0.017	-3.0669	-0.7269	767.231
3150	1	Extremo 1A	45.511	58.052	-0.017	-3.0669	-0.7187	743.654
3150	0	Extremo 2A	47.23	-13.452	-0.028	11.3098	-0.7255	876.064
3150	0.5	Extremo 2A	47.23	8.346	-0.028	11.3098	-0.7114	877.34
3150	1	Extremo 2A	47.23	30.143	-0.028	11.3098	-0.6974	867.718
3151	0	Extremo 1A	45.559	110.067	-0.02	-11.9332	-0.7363	742.055
3151	0.5	Extremo 1A	45.559	131.864	-0.02	-11.9332	-0.7263	681.572
3151	1	Extremo 1A	45.559	153.662	-0.02	-11.9332	-0.7163	610.191
3151	0	Extremo 2A	47.694	80.451	-0.00876	1.3839	-0.7122	864.721
3151	0.5	Extremo 2A	47.694	102.248	-0.00876	1.3839	-0.7078	819.046
3151	1	Extremo 2A	47.694	124.046	-0.00876	1.3839	-0.7034	762.473
3152	0	Extremo 1A	45.624	205.885	-0.024	-20.9741	-0.7374	606.721
3152	0.5	Extremo 1A	45.624	227.683	-0.024	-20.9741	-0.7254	498.329
3152	1	Extremo 1A	45.624	249.48	-0.024	-20.9741	-0.7135	379.038
3152	0	Extremo 2A	48.055	172.992	0.027	-9.7421	-0.6907	757.677
3152	0.5	Extremo 2A	48.055	194.789	0.027	-9.7421	-0.7042	665.732
3152	1	Extremo 2A	48.055	216.587	0.027	-9.7421	-0.7177	562.888
3153	0	Extremo 1A	45.711	301.968	-0.028	-30.4908	-0.7385	374.256
3153	0.5	Extremo 1A	45.711	323.766	-0.028	-30.4908	-0.7244	217.822
3153	1	Extremo 1A	45.711	345.563	-0.028	-30.4908	-0.7102	50.49
3153	0	Extremo 2A	47.901	263.061	0.087	-23.2888	-0.658	557.373
3153	0.5	Extremo 2A	47.901	284.859	0.087	-23.2888	-0.7014	420.393
3153	1	Extremo 2A	47.901	306.656	0.087	-23.2888	-0.7449	272.514
3154	0	Extremo 1A	45.828	399.454	-0.033	-40.3402	-0.7395	47.2606
3154	0.5	Extremo 1A	45.828	421.252	-0.033	-40.3402	-0.7231	-157.916
3154	1	Extremo 1A	45.828	443.049	-0.033	-40.3402	-0.7067	-373.991
3154	0	Extremo 2A	46.142	352.468	0.173	-40.9939	-0.6109	271.508
3154	0.5	Extremo 2A	46.142	374.265	0.173	-40.9939	-0.6972	89.8242
3154	1	Extremo 2A	46.142	396.063	0.173	-40.9939	-0.7836	-102.758
3155	0	Extremo 1A	45.985	510.538	-0.037	-47.6518	-0.7401	-363.628
3155	0.5	Extremo 1A	45.985	532.335	-0.037	-47.6518	-0.7214	-624.346
3155	1	Extremo 1A	45.985	554.133	-0.037	-47.6518	-0.7028	-895.963
3155	0	Extremo 2A	40.023	471.78	0.256	-63.7203	-0.5268	-80.5654
3155	0.5	Extremo 2A	40.023	493.578	0.256	-63.7203	-0.655	-321.905
3155	1	Extremo 2A	40.023	515.375	0.256	-63.7203	-0.7831	-574.143
3156	0	Extremo 1A	46.195	720.241	-0.041	-41.4782	-0.7399	-832.229
3156	0.5	Extremo 1A	46.195	742.039	-0.041	-41.4782	-0.7195	-1197.8
3156	1	Extremo 1A	46.195	763.836	-0.041	-41.4782	-0.699	-1574.27
3156	0	Extremo 2A	22.687	789.384	0.291	-84.284	-0.2192	-494.563
3156	0.5	Extremo 2A	22.687	811.181	0.291	-84.284	-0.3647	-894.704
3156	1	Extremo 2A	22.687	832.979	0.291	-84.284	-0.5102	-1305.74
3157	0	Extremo 1A	46.47	1457.7	-0.043	-1.4786	-0.7385	-1388.67
3157	0.5	Extremo 1A	46.47	1479.5	-0.043	-1.4786	-0.7171	-2122.97
3157	1	Extremo 1A	46.47	1501.3	-0.043	-1.4786	-0.6956	-2868.17
3157	0	Extremo 2A	5.351	1666.54	0.256	-66.7899	0.0537	-1109.1

3157	0.5	Extremo 2A	5.351	1688.33	0.256	-66.7899	-0.0744	-1947.81
3157	1	Extremo 2A	5.351	1710.13	0.256	-66.7899	-0.2025	-2797.43
3158	0	Extremo 1A	46.822	-1639.27	-0.041	66.6026	-0.7348	-2870.64
3158	0.5	Extremo 1A	46.822	-1617.47	-0.041	66.6026	-0.7142	-2056.45
3158	1	Extremo 1A	46.822	-1595.68	-0.041	66.6026	-0.6935	-1253.17
3158	0	Extremo 2A	-0.769	-1602.8	0.172	-4.1451	0.054	-2800.95
3158	0.5	Extremo 2A	-0.769	-1581	0.172	-4.1451	-0.0322	-2005
3158	1	Extremo 2A	-0.769	-1559.2	0.172	-4.1451	-0.1183	-1219.95
3159	0	Extremo 1A	47.253	-902.616	-0.034	106.054	-0.7276	-1443.72
3159	0.5	Extremo 1A	47.253	-880.818	-0.034	106.054	-0.7108	-997.857
3159	1	Extremo 1A	47.253	-859.021	-0.034	106.054	-0.694	-562.898
3159	0	Extremo 2A	-2.527	-831.718	0.086	36.9588	0.0153	-1416.29
3159	0.5	Extremo 2A	-2.527	-809.921	0.086	36.9588	-0.0279	-1005.88
3159	1	Extremo 2A	-2.527	-788.123	0.086	36.9588	-0.0711	-606.365
3160	0	Extremo 1A	47.725	-694.848	-0.016	110.9	-0.7149	-631.635
3160	0.5	Extremo 1A	47.725	-673.051	-0.016	110.9	-0.707	-289.661
3160	1	Extremo 1A	47.725	-651.253	-0.016	110.9	-0.6991	41.4152
3160	0	Extremo 2A	-2.68	-617.062	0.026	44.7545	-0.012	-672.719
3160	0.5	Extremo 2A	-2.68	-595.265	0.026	44.7545	-0.0252	-369.638
3160	1	Extremo 2A	-2.68	-573.467	0.026	44.7545	-0.0383	-77.4546
3161	0	Extremo 1A	48.097	-587.642	0.018	100.923	-0.694	26.0358
3161	0.5	Extremo 1A	48.097	-565.845	0.018	100.923	-0.7032	314.408
3161	1	Extremo 1A	48.097	-544.047	0.018	100.923	-0.7123	591.881
3161	0	Extremo 2A	-2.319	-505.315	-0.00979	38.479	-0.0264	-87.3382
3161	0.5	Extremo 2A	-2.319	-483.517	-0.00979	38.479	-0.0215	159.87
3161	1	Extremo 2A	-2.319	-461.72	-0.00979	38.479	-0.0166	396.179
3162	0	Extremo 1A	47.957	-497.37	0.076	85.9274	-0.6621	590.516
3162	0.5	Extremo 1A	47.957	-475.572	0.076	85.9274	-0.7001	833.751
3162	1	Extremo 1A	47.957	-453.775	0.076	85.9274	-0.7381	1066.09
3162	0	Extremo 2A	-1.854	-407.649	-0.029	29.175	-0.0325	400.781
3162	0.5	Extremo 2A	-1.854	-385.851	-0.029	29.175	-0.0178	599.156
3162	1	Extremo 2A	-1.854	-364.054	-0.029	29.175	-0.0032	786.632
3163	0	Extremo 1A	46.218	-411.64	0.159	66.4646	-0.616	1068.87
3163	0.5	Extremo 1A	46.218	-389.843	0.159	66.4646	-0.6955	1269.24
3163	1	Extremo 1A	46.218	-368.045	0.159	66.4646	-0.7751	1458.72
3163	0	Extremo 2A	-1.427	-311.498	-0.039	19.8874	-0.0339	793.064
3163	0.5	Extremo 2A	-1.427	-289.7	-0.039	19.8874	-0.0146	943.363
3163	1	Extremo 2A	-1.427	-267.903	-0.039	19.8874	0.0047	1082.76
3164	0	Extremo 1A	40.124	-312.18	0.24	38.1458	-0.5331	1468.88
3164	0.5	Extremo 1A	40.124	-290.383	0.24	38.1458	-0.6528	1619.52
3164	1	Extremo 1A	40.124	-268.585	0.24	38.1458	-0.7726	1759.26
3164	0	Extremo 2A	-1.077	-215.7	-0.042	10.848	-0.0325	1087.98
3164	0.5	Extremo 2A	-1.077	-193.902	-0.042	10.848	-0.0118	1190.38
3164	1	Extremo 2A	-1.077	-172.105	-0.042	10.848	0.009	1281.88
3165	0	Extremo 1A	22.822	-120.778	0.27	-4.3604	-0.2268	1768.91
3165	0.5	Extremo 1A	22.822	-98.981	0.27	-4.3604	-0.3619	1823.85
3165	1	Extremo 1A	22.822	-77.183	0.27	-4.3604	-0.4971	1867.89
3165	0	Extremo 2A	-0.803	-120.207	-0.041	1.7697	-0.0298	1285.26
3165	0.5	Extremo 2A	-0.803	-98.41	-0.041	1.7697	-0.0094	1339.91
3165	1	Extremo 2A	-0.803	-76.612	-0.041	1.7697	0.0111	1383.67
3166	0	Extremo 1A	5.532	70.608	0.231	-46.963	0.0446	1865.37
3166	0.5	Extremo 1A	5.532	92.405	0.231	-46.963	-0.0709	1824.62
3166	1	Extremo 1A	5.532	114.203	0.231	-46.963	-0.1863	1772.97
3166	0	Extremo 2A	-0.593	-25	-0.039	-7.6518	-0.0267	1385.11
3166	0.5	Extremo 2A	-0.593	-3.203	-0.039	-7.6518	-0.0074	1392.16
3166	1	Extremo 2A	-0.593	18.595	-0.039	-7.6518	0.0119	1388.31
3167	0	Extremo 1A	-0.525	170.118	0.142	-75.4663	0.0433	1770.27
3167	0.5	Extremo 1A	-0.525	191.916	0.142	-75.4663	-0.0276	1679.76
3167	1	Extremo 1A	-0.525	213.713	0.142	-75.4663	-0.0984	1578.35
3167	0	Extremo 2A	-0.433	69.918	-0.036	-17.74	-0.0235	1387.99
3167	0.5	Extremo 2A	-0.433	91.715	-0.036	-17.74	-0.0057	1347.58
3167	1	Extremo 2A	-0.433	113.513	-0.036	-17.74	0.0121	1296.28
3168	0	Extremo 1A	-2.198	256.723	0.05	-94.6946	0.0032	1584.25
3168	0.5	Extremo 1A	-2.198	278.52	0.05	-94.6946	-0.0217	1450.44
3168	1	Extremo 1A	-2.198	300.318	0.05	-94.6946	-0.0465	1305.73
3168	0	Extremo 2A	-0.311	164.893	-0.032	-28.7128	-0.0205	1295.27
3168	0.5	Extremo 2A	-0.311	186.69	-0.032	-28.7128	-0.0042	1207.37
3168	1	Extremo 2A	-0.311	208.488	-0.032	-28.7128	0.012	1108.58
3169	0	Extremo 1A	-2.238	353.638	-0.016	-107.553	-0.0239	1319.83
3169	0.5	Extremo 1A	-2.238	375.436	-0.016	-107.553	-0.016	1137.56
3169	1	Extremo 1A	-2.238	397.233	-0.016	-107.553	-0.0081	944.397
3169	0	Extremo 2A	-0.217	264.474	-0.03	-39.8169	-0.0177	1111.52
3169	0.5	Extremo 2A	-0.217	286.271	-0.03	-39.8169	-0.0028	973.837
3169	1	Extremo 2A	-0.217	308.069	-0.03	-39.8169	0.012	825.252
3170	0	Extremo 1A	-1.724	500.985	-0.053	-110.857	-0.0338	983.182
3170	0.5	Extremo 1A	-1.724	522.783	-0.053	-110.857	-0.0072	727.24
3170	1	Extremo 1A	-1.724	544.58	-0.053	-110.857	0.0194	460.4
3170	0	Extremo 2A	-0.142	401.315	-0.027	-47.1089	-0.0149	847.707
3170	0.5	Extremo 2A	-0.142	423.112	-0.027	-47.1089	-0.0013	641.6
3170	1	Extremo 2A	-0.142	444.91	-0.027	-47.1089	0.0122	424.595
3171	0	Extremo 1A	-1.066	897.43	-0.059	-95.5475	-0.0258	556.009
3171	0.5	Extremo 1A	-1.066	919.227	-0.059	-95.5475	0.0036	101.845
3171	1	Extremo 1A	-1.066	941.025	-0.059	-95.5475	0.033	-363.218
3171	0	Extremo 2A	-0.081	740.842	-0.023	-42.2918	-0.0112	493.836
3171	0.5	Extremo 2A	-0.081	762.639	-0.023	-42.2918	0.00051	117.966
3171	1	Extremo 2A	-0.081	784.437	-0.023	-42.2918	0.0123	-268.803
3172	0	Extremo 1A	-0.442	-449.376	-0.022	-60.4135	-0.0031	-350.966
3172	0.5	Extremo 1A	-0.442	-427.579	-0.022	-60.4135	0.0079	-131.727
3172	1	Extremo 1A	-0.442	-405.781	-0.022	-60.4135	0.0189	76.6126
3172	0	Extremo 2A	-0.032	-365.347	-0.016	-24.2304	-0.0057	-268.782
3172	0.5	Extremo 2A	-0.032	-343.549	-0.016	-24.2304	0.0022	-91.5582
3172	1	Extremo 2A	-0.032	-321.752	-0.016	-24.2304	0.0101	74.7671
3173	0	Extremo 1A	11.634	-10.238	-12.477	-8.7032	-6.7778	-14.0983
3173	0.5	Extremo 1A	11.634	11.56	-12.477	-8.7032	-0.5394	-14.4287
3173	1	Extremo 1A	11.634	33.357	-12.477	-8.7032	5.699	-25.6578
3173	0	Extremo 2A	11.634	-10.238	-12.477	-8.7032	-6.7778	-14.0983
3173	0.5	Extremo 2A	11.634	11.56	-12.477	-8.7032	-0.5394	-14.4287
3173	1	Extremo 2A	11.634	33.357	-12.477	-8.7032	5.699	-25.6578
3174	0	Extremo 1A	35.083	-187.657	-11.328	43.7536	-7.9954	-20.811
3174	0.5	Extremo 1A	35.083	-165.859	-11.328	43.7536	-2.3313	67.5681
3174	1	Extremo 1A	35.083	-144.062	-11.328	43.7536	3.3329	145.048
3174	0	Extremo 2A	35.083	-187.657	-11.328	43.7537	-7.9954	-20.811
3174	0.5	Extremo 2A	35.083	-165.859	-11.328	43.7537	-2.3313	67.5681
3174	1	Extremo 2A	35.083	-144.062	-11.328	43.7537	3.3329	145.048
3175	0	Extremo 1A	42.362	-149.323	-7.372	34.2587	-5.302	166.518
3175	0.5	Extremo 1A	42.362	-127.526	-7.372	34.2587	-1.6162	235.731
3175	1	Extremo 1A	42.362	-105.728	-7.372	34.2587	2.0696	294.044
3175	0	Extremo 2A	42.362	-149.324	-7.372	34.2587	-5.302	166.518
3175	0.5	Extremo 2A	42.362	-127.526	-7.372	34.2587	-1.6162	235.731
3175	1	Extremo 2A	42.362	-105.729	-7.372	34.2587	2.0696	294.044
3176	0	Extremo 1A	43.658	-60.919	-4.664	18.1521	-3.5386	303.522
3176	0.5	Extremo 1A	43.658	-39.122	-4.664	18.1521	-1.2068	328.532
3176	1	Extremo 1A	43.658	-17.324	-4.664	18.1521	1.1251	342.644
3176	0	Extremo 2A	43.658	-60.919	-4.664	18.1521	-3.5386	303.522
3176	0.5	Extremo 2A	43.658	-39.122	-4.664	18.1521	-1.2068	328.532
3176	1	Extremo 2A	43.658	-17.324	-4.664	18.1521	1.1251	342.644
3177	0	Extremo 1A	42.98	35.201	-3.023	5.1111	-2.5212	346.094
3177	0.5	Extremo 1A	42.98	56.998	-3.023	5.1111	-1.0096	323.044
3177	1	Extremo 1A	42.98	78.796	-3.023	5.1111	0.502	289.096
3177	0	Extremo 2A	42.98	35.201	-3.023	5.1111	-2.5212	346.094
3177	0.5	Extremo 2A	42.98	56.998	-3.023	5.1111	-1.0096	323.045
3177	1	Extremo 2A	42.98	78.796	-3.023	5.1111	0.502	289.096
3178	0	Extremo 1A	41.824	132.514	-2.006	-6.4811	-1.9049	288.768
3178	0.5	Extremo 1A	41.824	154.311	-2.006	-6.4811	-0.9017	217.062
3178	1	Extremo 1A	41.824	176.109	-2.006	-6.4811	0.1015	134.456
3178	0	Extremo 2A	41.824	132.514	-2.006	-6.4811	-1.9049	288.768
3178	0.5	Extremo 2A	41.824	154.311	-2.006	-6.4811	-0.9017	217.062
3178	1	Extremo 2A	41.824	176.109	-2.006	-6.4811	0.1015	134.457
3179	0	Extremo 1A	40.705	229.703	-1.354	-20.0481	-1.5145	130.119
3179	0.5	Extremo 1A	40.705	251.5	-1.354	-20.0481	-0.8375	9.8183
3179	1	Extremo 1A	40.705	273.298	-1.354	-20.0481	-0.1606	-121.381
3179	0	Extremo 2A	40.705	229.703	-1.354	-20.0481	-1.5145	130.119
3179	0.5	Extremo 2A	40.705	251.5	-1.354	-20.0481	-0.8375	9.8186
3179	1	Extremo 2A	40.705	273.298	-1.354	-20.0481	-0.1606	-121.381
3180	0	Extremo 1A	39.766	323.755	-0.924	-40.6812	-1.2602	-132.079
3180	0.5	Extremo 1A	39.766	345.553	-0.924	-40.6812	-0.7982	-299.405
3180	1	Extremo 1A	39.766	367.35	-0.924	-40.6812	-0.3361	-477.631
3180	0	Extremo 2A	39.766	323.755	-0.924	-40.6812	-1.2602	-132.078
3180	0.5	Extremo 2A	39.766	345.553	-0.924	-40.6812	-0.7982	-299.405
3180	1	Extremo 2A	39.766	367.35	-0.924	-40.6812	-0.3361	-477.631
3181	0	Extremo 1A	39.023	393.881	-0.636	-71.7578	-1.0914	-502.719
3181	0.5	Extremo 1A	39.023	415.678	-0.636	-71.7578	-0.7736	-705.109
3181	1	Extremo 1A	39.023	437.476	-0.636	-71.7578	-0.4557	-918.397
3181	0	Extremo 2A	39.023	393.88	-0.636	-71.7578	-1.0914	-502.719

3181	0.5	Extremo 2A	39.023	415.678	-0.636	-71.7578	-0.7736	-705.109
3181	1	Extremo 2A	39.023	437.475	-0.636	-71.7578	-0.4557	-918.397
3182	0	Extremo 1A	38.449	306.967	-0.44	-82.5779	-0.9778	-976.237
3182	0.5	Extremo 1A	38.449	328.765	-0.44	-82.5779	-0.758	-1135.17
3182	1	Extremo 1A	38.449	350.562	-0.44	-82.5779	-0.5382	-1305
3182	0	Extremo 2A	38.449	306.967	-0.44	-82.5779	-0.9778	-976.236
3182	0.5	Extremo 2A	38.449	328.765	-0.44	-82.5779	-0.758	-1135.17
3182	1	Extremo 2A	38.449	350.562	-0.44	-82.5779	-0.5382	-1305
3183	0	Extremo 1A	38.011	-456.276	-0.305	101.051	-0.9005	-1304.74
3183	0.5	Extremo 1A	38.011	-434.479	-0.305	101.051	-0.7481	-1082.05
3183	1	Extremo 1A	38.011	-412.681	-0.305	101.051	-0.5956	-870.264
3183	0	Extremo 2A	38.011	-456.276	-0.305	101.051	-0.9005	-1304.74
3183	0.5	Extremo 2A	38.011	-434.479	-0.305	101.051	-0.7481	-1082.05
3183	1	Extremo 2A	38.011	-412.681	-0.305	101.051	-0.5956	-870.264
3184	0	Extremo 1A	37.678	-543.214	-0.212	90.29	-0.8475	-811.864
3184	0.5	Extremo 1A	37.678	-521.417	-0.212	90.29	-0.7416	-545.707
3184	1	Extremo 1A	37.678	-499.619	-0.212	90.29	-0.6356	-290.448
3184	0	Extremo 2A	37.678	-543.214	-0.212	90.29	-0.8475	-811.864
3184	0.5	Extremo 2A	37.678	-521.417	-0.212	90.29	-0.7416	-545.706
3184	1	Extremo 2A	37.678	-499.619	-0.212	90.29	-0.6356	-290.447
3185	0	Extremo 1A	37.426	-473.155	-0.147	59.3538	-0.811	-264.653
3185	0.5	Extremo 1A	37.426	-451.357	-0.147	59.3538	-0.7374	-33.5245
3185	1	Extremo 1A	37.426	-429.56	-0.147	59.3538	-0.6637	186.705
3185	0	Extremo 2A	37.426	-473.155	-0.147	59.3538	-0.811	-264.652
3185	0.5	Extremo 2A	37.426	-451.357	-0.147	59.3538	-0.7374	-33.5243
3185	1	Extremo 2A	37.426	-429.56	-0.147	59.3538	-0.6637	186.705
3186	0	Extremo 1A	37.234	-379.236	-0.102	39.0218	-0.7857	198.414
3186	0.5	Extremo 1A	37.234	-357.438	-0.102	39.0218	-0.7346	382.582
3186	1	Extremo 1A	37.234	-335.641	-0.102	39.0218	-0.6835	555.852
3186	0	Extremo 2A	37.234	-379.236	-0.102	39.0218	-0.7857	198.414
3186	0.5	Extremo 2A	37.234	-357.438	-0.102	39.0218	-0.7346	382.582
3186	1	Extremo 2A	37.234	-335.641	-0.102	39.0218	-0.6835	555.852
3187	0	Extremo 1A	37.088	-282.25	-0.071	26.1569	-0.7681	561.785
3187	0.5	Extremo 1A	37.088	-260.453	-0.071	26.1569	-0.7327	697.46
3187	1	Extremo 1A	37.088	-238.655	-0.071	26.1569	-0.6973	822.237
3187	0	Extremo 2A	37.088	-282.25	-0.071	26.1569	-0.7681	561.784
3187	0.5	Extremo 2A	37.088	-260.453	-0.071	26.1569	-0.7327	697.46
3187	1	Extremo 2A	37.088	-238.655	-0.071	26.1569	-0.6973	822.237
3188	0	Extremo 1A	36.977	-185.075	-0.049	16.3211	-0.756	825.251
3188	0.5	Extremo 1A	36.977	-163.277	-0.049	16.3211	-0.7315	912.339
3188	1	Extremo 1A	36.977	-141.48	-0.049	16.3211	-0.7071	988.528
3188	0	Extremo 2A	36.977	-185.074	-0.049	16.3211	-0.756	825.251
3188	0.5	Extremo 2A	36.977	-163.277	-0.049	16.3211	-0.7315	912.339
3188	1	Extremo 2A	36.977	-141.479	-0.049	16.3211	-0.7071	988.528
3189	0	Extremo 1A	36.892	-88.141	-0.034	7.4659	-0.7475	989.89
3189	0.5	Extremo 1A	36.892	-66.343	-0.034	7.4659	-0.7307	1028.51
3189	1	Extremo 1A	36.892	-44.546	-0.034	7.4659	-0.714	1056.23
3189	0	Extremo 2A	36.892	-88.14	-0.034	7.4659	-0.7475	989.889
3189	0.5	Extremo 2A	36.892	-66.343	-0.034	7.4659	-0.7307	1028.51
3189	1	Extremo 2A	36.892	-44.545	-0.034	7.4659	-0.714	1056.23
3190	0	Extremo 1A	36.828	8.626	-0.023	-1.1286	-0.7417	1056.51
3190	0.5	Extremo 1A	36.828	30.423	-0.023	-1.1286	-0.7302	1046.75
3190	1	Extremo 1A	36.828	52.221	-0.023	-1.1286	-0.7188	1026.08
3190	0	Extremo 2A	36.828	8.626	-0.023	-1.1286	-0.7417	1056.51
3190	0.5	Extremo 2A	36.828	30.423	-0.023	-1.1286	-0.7302	1046.75
3190	1	Extremo 2A	36.828	52.221	-0.023	-1.1286	-0.7188	1026.08
3191	0	Extremo 1A	36.779	105.429	-0.015	-9.7251	-0.7376	1025.42
3191	0.5	Extremo 1A	36.779	127.226	-0.015	-9.7251	-0.7299	967.254
3191	1	Extremo 1A	36.779	149.024	-0.015	-9.7251	-0.7221	898.192
3191	0	Extremo 2A	36.779	105.429	-0.015	-9.7251	-0.7376	1025.42
3191	0.5	Extremo 2A	36.779	127.226	-0.015	-9.7251	-0.7299	967.254
3191	1	Extremo 2A	36.779	149.024	-0.015	-9.7251	-0.7221	898.191
3192	0	Extremo 1A	36.741	202.48	-0.01	-18.6087	-0.7349	896.377
3192	0.5	Extremo 1A	36.741	224.278	-0.01	-18.6087	-0.7297	789.687
3192	1	Extremo 1A	36.741	246.075	-0.01	-18.6087	-0.7245	672.099
3192	0	Extremo 2A	36.741	202.481	-0.01	-18.6087	-0.7349	896.376
3192	0.5	Extremo 2A	36.741	224.278	-0.01	-18.6087	-0.7297	789.686
3192	1	Extremo 2A	36.741	246.076	-0.01	-18.6087	-0.7245	672.098
3193	0	Extremo 1A	36.712	299.862	-0.00683	-28.6009	-0.733	668.468
3193	0.5	Extremo 1A	36.712	321.66	-0.00683	-28.6009	-0.7295	513.087
3193	1	Extremo 1A	36.712	343.457	-0.00683	-28.6009	-0.7261	346.808
3193	0	Extremo 2A	36.712	299.862	-0.00683	-28.6009	-0.733	668.466
3193	0.5	Extremo 2A	36.712	321.66	-0.00683	-28.6009	-0.7295	513.086
3193	1	Extremo 2A	36.712	343.457	-0.00683	-28.6009	-0.7261	346.806
3194	0	Extremo 1A	36.691	397.096	-0.00442	-42.0551	-0.7317	339.898
3194	0.5	Extremo 1A	36.691	418.893	-0.00442	-42.0551	-0.7295	135.9
3194	1	Extremo 1A	36.691	440.691	-0.00442	-42.0551	-0.7273	-78.9957
3194	0	Extremo 2A	36.691	397.096	-0.00442	-42.0551	-0.7317	339.896
3194	0.5	Extremo 2A	36.691	418.893	-0.00442	-42.0551	-0.7295	135.899
3194	1	Extremo 2A	36.691	440.691	-0.00442	-42.0551	-0.7273	-78.997
3195	0	Extremo 1A	36.674	490.898	-0.00278	-64.0747	-0.7308	-92.4872
3195	0.5	Extremo 1A	36.674	512.695	-0.00278	-64.0747	-0.7294	-343.385
3195	1	Extremo 1A	36.674	534.493	-0.00278	-64.0747	-0.728	-605.182
3195	0	Extremo 2A	36.674	490.898	-0.00278	-64.0747	-0.7308	-92.4885
3195	0.5	Extremo 2A	36.674	512.695	-0.00278	-64.0747	-0.7294	-343.387
3195	1	Extremo 2A	36.674	534.493	-0.00278	-64.0747	-0.728	-605.184
3196	0	Extremo 1A	36.661	557.173	-0.00168	-98.2111	-0.7302	-634.919
3196	0.5	Extremo 1A	36.661	578.97	-0.00168	-98.2111	-0.7294	-918.955
3196	1	Extremo 1A	36.661	600.768	-0.00168	-98.2111	-0.7286	-1213.89
3196	0	Extremo 2A	36.661	557.173	-0.00168	-98.2111	-0.7302	-634.921
3196	0.5	Extremo 2A	36.661	578.97	-0.00168	-98.2111	-0.7294	-918.956
3196	1	Extremo 2A	36.661	600.768	-0.00168	-98.2111	-0.7286	-1213.89
3197	0	Extremo 1A	36.651	441.005	-0.00095	-108.554	-0.7299	-1281.5
3197	0.5	Extremo 1A	36.651	462.803	-0.00095	-108.554	-0.7294	-1507.45
3197	1	Extremo 1A	36.651	484.6	-0.00095	-108.554	-0.7289	-1744.3
3197	0	Extremo 2A	36.651	441.005	-0.00095	-108.554	-0.7299	-1281.5
3197	0.5	Extremo 2A	36.651	462.803	-0.00095	-108.554	-0.7294	-1507.46
3197	1	Extremo 2A	36.651	484.6	-0.00095	-108.554	-0.7289	-1744.31
3198	0	Extremo 1A	36.643	-462.236	-0.00048	107.557	-0.7296	-1744.35
3198	0.5	Extremo 1A	36.643	-440.439	-0.00048	107.557	-0.7294	-1518.68
3198	1	Extremo 1A	36.643	-418.641	-0.00048	107.557	-0.7291	-1303.91
3198	0	Extremo 2A	36.643	-462.237	-0.00048	107.557	-0.7296	-1744.35
3198	0.5	Extremo 2A	36.643	-440.439	-0.00048	107.557	-0.7294	-1518.68
3198	1	Extremo 2A	36.643	-418.642	-0.00048	107.557	-0.7291	-1303.91
3199	0	Extremo 1A	36.638	-578.403	-0.00018	97.2133	-0.7295	-1236.39
3199	0.5	Extremo 1A	36.638	-556.606	-0.00018	97.2133	-0.7294	-952.636
3199	1	Extremo 1A	36.638	-534.808	-0.00018	97.2133	-0.7293	-679.783
3199	0	Extremo 2A	36.638	-578.404	-0.00018	97.2133	-0.7295	-1236.39
3199	0.5	Extremo 2A	36.638	-556.606	-0.00018	97.2133	-0.7294	-952.637
3199	1	Extremo 2A	36.638	-534.809	-0.00018	97.2133	-0.7293	-679.783
3200	0	Extremo 1A	36.633	-512.128	1.1E-06	63.0759	-0.7294	-650.137
3200	0.5	Extremo 1A	36.633	-490.33	1.1E-06	63.0759	-0.7294	-399.522
3200	1	Extremo 1A	36.633	-468.533	1.1E-06	63.0759	-0.7294	-159.807
3200	0	Extremo 2A	36.633	-512.128	1.1E-06	63.0759	-0.7294	-650.137
3200	0.5	Extremo 2A	36.633	-490.331	1.1E-06	63.0759	-0.7294	-399.523
3200	1	Extremo 2A	36.633	-468.533	1.1E-06	63.0759	-0.7294	-159.807
3201	0	Extremo 1A	36.63	-418.324	0.00011	41.055	-0.7293	-146.408
3201	0.5	Extremo 1A	36.63	-396.526	0.00011	41.055	-0.7294	57.3045
3201	1	Extremo 1A	36.63	-374.729	0.00011	41.055	-0.7294	250.118
3201	0	Extremo 2A	36.63	-418.324	0.00011	41.055	-0.7293	-146.408
3201	0.5	Extremo 2A	36.63	-396.527	0.00011	41.055	-0.7294	57.3047
3201	1	Extremo 2A	36.63	-374.729	0.00011	41.055	-0.7294	250.119
3202	0	Extremo 1A	36.627	-321.087	0.00016	27.5996	-0.7293	256.933
3202	0.5	Extremo 1A	36.627	-299.289	0.00016	27.5996	-0.7294	412.027
3202	1	Extremo 1A	36.627	-277.492	0.00016	27.5996	-0.7295	556.222
3202	0	Extremo 2A	36.627	-321.087	0.00016	27.5996	-0.7293	256.933
3202	0.5	Extremo 2A	36.627	-299.29	0.00016	27.5996	-0.7294	412.027
3202	1	Extremo 2A	36.627	-277.492	0.00016	27.5996	-0.7295	556.223
3203	0	Extremo 1A	36.625	-223.696	0.00018	17.6071	-0.7293	559.753
3203	0.5	Extremo 1A	36.625	-201.898	0.00018	17.6071	-0.7294	666.152
3203	1	Extremo 1A	36.625	-180.101	0.00018	17.6071	-0.7295	761.651
3203	0	Extremo 2A	36.625	-223.696	0.00018	17.6071	-0.7293	559.754
3203	0.5	Extremo 2A	36.625	-201.899	0.00018	17.6071	-0.7294	666.153
3203	1	Extremo 2A	36.625	-180.101	0.00018	17.6071	-0.7295	761.653
3204	0	Extremo 1A	36.624	-126.626	0.00019	8.7259	-0.7293	763.359
3204	0.5	Extremo 1A	36.624	-104.829	0.00019	8.7259	-0.7294	821.222
3204	1	Extremo 1A	36.624	-83.031	0.00019	8.7259	-0.7295	868.187
3204	0	Extremo 2A	36.624	-126.627	0.00019	8.7259	-0.7293	763.36
3204	0.5	Extremo 2A	36.624	-104.829	0.00019	8.7259	-0.7294	821.224
3204	1	Extremo 2A	36.624	-83.032	0.00019	8.7259	-0.7295	868.19
3205	0	Extremo 1A	36.622	-29.786	0.00018	0.1362	-0.7293	868.733
3205	0.5	Extremo 1A	36.622	-7.989	0.00018	0.1362	-0.7294	878.177
3205	1	Extremo 1A	36.622	13.809	0.00018	0.1362	-0.7295	876.722
3205	0	Extremo 2A	36.622	-29.787	0.00018	0.1362	-0.7293	868.735

3205	0.5	Extremo 2A	36.622	-7.99	0.00018	0.1362	-0.7294	878.179
3205	1	Extremo 2A	36.622	13.808	0.00018	0.1362	-0.7295	876.725
3206	0	Extremo 1A	36.621	67.051	0.00016	-8.4473	-0.7293	876.299
3206	0.5	Extremo 1A	36.621	88.849	0.00016	-8.4473	-0.7294	837.324
3206	1	Extremo 1A	36.621	110.646	0.00016	-8.4473	-0.7295	787.451
3206	0	Extremo 2A	36.621	67.05	0.00016	-8.4473	-0.7293	876.302
3206	0.5	Extremo 2A	36.621	88.848	0.00016	-8.4473	-0.7294	837.327
3206	1	Extremo 2A	36.621	110.645	0.00016	-8.4473	-0.7295	787.454
3207	0	Extremo 1A	36.621	164.115	0.00014	-17.3026	-0.7294	785.887
3207	0.5	Extremo 1A	36.621	185.913	0.00014	-17.3026	-0.7294	698.38
3207	1	Extremo 1A	36.621	207.71	0.00014	-17.3026	-0.7295	599.975
3207	0	Extremo 2A	36.621	164.115	0.00014	-17.3026	-0.7294	785.891
3207	0.5	Extremo 2A	36.621	185.912	0.00014	-17.3026	-0.7294	698.384
3207	1	Extremo 2A	36.621	207.71	0.00014	-17.3026	-0.7295	599.979
3208	0	Extremo 1A	36.62	261.506	0.00012	-27.2166	-0.7294	596.641
3208	0.5	Extremo 1A	36.62	283.303	0.00012	-27.2166	-0.7294	460.439
3208	1	Extremo 1A	36.62	305.101	0.00012	-27.2166	-0.7295	313.338
3208	0	Extremo 2A	36.62	261.505	0.00012	-27.2166	-0.7294	596.645
3208	0.5	Extremo 2A	36.62	283.303	0.00012	-27.2166	-0.7294	460.443
3208	1	Extremo 2A	36.62	305.1	0.00012	-27.2166	-0.7295	313.342
3209	0	Extremo 1A	36.62	358.784	0.00011	-40.4504	-0.7294	306.833
3209	0.5	Extremo 1A	36.62	380.582	0.00011	-40.4504	-0.7294	121.992
3209	1	Extremo 1A	36.62	402.379	0.00011	-40.4504	-0.7295	-73.7485
3209	0	Extremo 2A	36.62	358.784	0.00011	-40.4504	-0.7294	306.838
3209	0.5	Extremo 2A	36.62	380.581	0.00011	-40.4504	-0.7294	121.997
3209	1	Extremo 2A	36.62	402.379	0.00011	-40.4504	-0.7295	-73.7435
3210	0	Extremo 1A	36.619	452.816	9.1E-05	-61.9127	-0.7294	-86.6073
3210	0.5	Extremo 1A	36.619	474.613	9.1E-05	-61.9127	-0.7294	-318.465
3210	1	Extremo 1A	36.619	496.411	9.1E-05	-61.9127	-0.7295	-561.221
3210	0	Extremo 2A	36.619	452.815	9.1E-05	-61.9126	-0.7294	-86.6023
3210	0.5	Extremo 2A	36.619	474.613	9.1E-05	-61.9126	-0.7294	-318.459
3210	1	Extremo 2A	36.619	496.41	9.1E-05	-61.9126	-0.7295	-561.215
3211	0	Extremo 1A	36.619	520.317	7.6E-05	-94.986	-0.7294	-589.798
3211	0.5	Extremo 1A	36.619	542.114	7.6E-05	-94.986	-0.7294	-855.406
3211	1	Extremo 1A	36.619	563.912	7.6E-05	-94.986	-0.7295	-1131.91
3211	0	Extremo 2A	36.619	520.316	7.6E-05	-94.9858	-0.7294	-589.792
3211	0.5	Extremo 2A	36.619	542.114	7.6E-05	-94.9858	-0.7294	-855.4
3211	1	Extremo 2A	36.619	563.911	7.6E-05	-94.9858	-0.7295	-1131.91
3212	0	Extremo 1A	36.619	411.185	6.4E-05	-104.819	-0.7294	-1197.22
3212	0.5	Extremo 1A	36.619	432.982	6.4E-05	-104.819	-0.7294	-1408.27
3212	1	Extremo 1A	36.619	454.78	6.4E-05	-104.819	-0.7295	-1630.21
3212	0	Extremo 2A	36.619	411.185	6.4E-05	-104.819	-0.7294	-1197.22
3212	0.5	Extremo 2A	36.619	432.982	6.4E-05	-104.819	-0.7294	-1408.26
3212	1	Extremo 2A	36.619	454.78	6.4E-05	-104.819	-0.7295	-1630.2
3213	0	Extremo 1A	36.619	-460.666	5.3E-05	104.916	-0.7294	-1630.19
3213	0.5	Extremo 1A	36.619	-438.869	5.3E-05	104.916	-0.7294	-1405.31
3213	1	Extremo 1A	36.619	-417.071	5.3E-05	104.916	-0.7295	-1191.32
3213	0	Extremo 2A	36.619	-460.665	5.3E-05	104.916	-0.7294	-1630.19
3213	0.5	Extremo 2A	36.619	-438.867	5.3E-05	104.916	-0.7294	-1405.3
3213	1	Extremo 2A	36.619	-417.07	5.3E-05	104.916	-0.7295	-1191.32
3214	0	Extremo 1A	36.619	-569.798	4.3E-05	95.0831	-0.7294	-1125.98
3214	0.5	Extremo 1A	36.619	-548.001	4.3E-05	95.0831	-0.7294	-846.535
3214	1	Extremo 1A	36.619	-526.203	4.3E-05	95.0831	-0.7295	-577.984
3214	0	Extremo 2A	36.619	-569.796	4.3E-05	95.083	-0.7294	-1125.98
3214	0.5	Extremo 2A	36.619	-547.999	4.3E-05	95.083	-0.7294	-846.532
3214	1	Extremo 2A	36.619	-526.201	4.3E-05	95.083	-0.7295	-577.982
3215	0	Extremo 1A	36.619	-502.297	3.6E-05	62.0103	-0.7294	-549.38
3215	0.5	Extremo 1A	36.619	-480.5	3.6E-05	62.0103	-0.7294	-303.68
3215	1	Extremo 1A	36.619	-458.702	3.6E-05	62.0103	-0.7295	-68.8797
3215	0	Extremo 2A	36.619	-502.295	3.6E-05	62.0102	-0.7294	-549.377
3215	0.5	Extremo 2A	36.619	-480.498	3.6E-05	62.0102	-0.7294	-303.679
3215	1	Extremo 2A	36.619	-458.7	3.6E-05	62.0102	-0.7295	-68.8793
3216	0	Extremo 1A	36.619	-408.266	2.9E-05	40.5487	-0.7294	-55.9927
3216	0.5	Extremo 1A	36.619	-386.468	2.9E-05	40.5487	-0.7294	142.691
3216	1	Extremo 1A	36.619	-364.671	2.9E-05	40.5487	-0.7295	330.476
3216	0	Extremo 2A	36.619	-408.264	2.9E-05	40.5486	-0.7294	-55.9924
3216	0.5	Extremo 2A	36.619	-386.466	2.9E-05	40.5486	-0.7294	142.69
3216	1	Extremo 2A	36.619	-364.669	2.9E-05	40.5486	-0.7295	330.474
3217	0	Extremo 1A	36.619	-310.987	2.4E-05	27.3159	-0.7294	337.009
3217	0.5	Extremo 1A	36.619	-289.189	2.4E-05	27.3159	-0.7294	487.053
3217	1	Extremo 1A	36.619	-267.392	2.4E-05	27.3159	-0.7295	626.199
3217	0	Extremo 2A	36.619	-310.985	2.4E-05	27.3159	-0.7294	337.007
3217	0.5	Extremo 2A	36.619	-289.187	2.4E-05	27.3159	-0.7294	487.05
3217	1	Extremo 2A	36.619	-267.39	2.4E-05	27.3159	-0.7295	626.195
3218	0	Extremo 1A	36.618	-213.597	1.9E-05	17.4035	-0.7294	629.563
3218	0.5	Extremo 1A	36.618	-191.799	1.9E-05	17.4035	-0.7294	730.912
3218	1	Extremo 1A	36.618	-170.002	1.9E-05	17.4035	-0.7295	821.362
3218	0	Extremo 2A	36.618	-213.594	1.9E-05	17.4034	-0.7294	629.559
3218	0.5	Extremo 2A	36.618	-191.797	1.9E-05	17.4034	-0.7294	730.907
3218	1	Extremo 2A	36.618	-169.999	1.9E-05	17.4034	-0.7295	821.356
3219	0	Extremo 1A	36.618	-116.533	1.5E-05	8.5505	-0.7294	822.96
3219	0.5	Extremo 1A	36.618	-94.736	1.5E-05	8.5505	-0.7294	875.777
3219	1	Extremo 1A	36.618	-72.938	1.5E-05	8.5505	-0.7295	917.695
3219	0	Extremo 2A	36.618	-116.531	1.5E-05	8.5505	-0.7294	822.954
3219	0.5	Extremo 2A	36.618	-94.733	1.5E-05	8.5505	-0.7294	875.77
3219	1	Extremo 2A	36.618	-72.936	1.5E-05	8.5505	-0.7295	917.687
3220	0	Extremo 1A	36.618	-19.697	1.2E-05	-0.0291	-0.7294	918.158
3220	0.5	Extremo 1A	36.618	2.1	1.2E-05	-0.0291	-0.7294	922.557
3220	1	Extremo 1A	36.618	23.898	1.2E-05	-0.0291	-0.7295	916.057
3220	0	Extremo 2A	36.618	-19.695	1.2E-05	-0.0291	-0.7294	918.149
3220	0.5	Extremo 2A	36.618	2.102	1.2E-05	-0.0291	-0.7294	922.547
3220	1	Extremo 2A	36.618	23.9	1.2E-05	-0.0291	-0.7295	916.047
3221	0	Extremo 1A	36.618	77.139	1E-05	-8.6105	-0.7294	915.562
3221	0.5	Extremo 1A	36.618	98.936	1E-05	-8.6105	-0.7294	871.543
3221	1	Extremo 1A	36.618	120.734	1E-05	-8.6105	-0.7294	816.625
3221	0	Extremo 2A	36.618	77.141	1E-05	-8.6106	-0.7294	915.551
3221	0.5	Extremo 2A	36.618	98.939	1E-05	-8.6106	-0.7294	871.531
3221	1	Extremo 2A	36.618	120.736	1E-05	-8.6106	-0.7294	816.613
3222	0	Extremo 1A	36.618	174.203	8.1E-06	-17.4712	-0.7294	814.989
3222	0.5	Extremo 1A	36.618	196	8.1E-06	-17.4712	-0.7294	722.438
3222	1	Extremo 1A	36.618	217.798	8.1E-06	-17.4712	-0.7294	618.988
3222	0	Extremo 2A	36.618	174.205	8.1E-06	-17.4713	-0.7294	814.976
3222	0.5	Extremo 2A	36.618	196.003	8.1E-06	-17.4713	-0.7294	722.424
3222	1	Extremo 2A	36.618	217.8	8.1E-06	-17.4713	-0.7294	618.974
3223	0	Extremo 1A	36.618	271.591	6.5E-06	-27.4063	-0.7294	615.57
3223	0.5	Extremo 1A	36.618	293.388	6.5E-06	-27.4063	-0.7294	474.325
3223	1	Extremo 1A	36.618	315.186	6.5E-06	-27.4063	-0.7294	322.182
3223	0	Extremo 2A	36.618	271.593	6.5E-06	-27.4064	-0.7294	615.555
3223	0.5	Extremo 2A	36.618	293.39	6.5E-06	-27.4064	-0.7294	474.309
3223	1	Extremo 2A	36.618	315.188	6.5E-06	-27.4064	-0.7294	322.165
3224	0	Extremo 1A	36.618	368.854	5.2E-06	-40.7013	-0.7294	315.563
3224	0.5	Extremo 1A	36.618	390.651	5.2E-06	-40.7013	-0.7294	125.687
3224	1	Extremo 1A	36.618	412.449	5.2E-06	-40.7013	-0.7294	-75.0881
3224	0	Extremo 2A	36.618	368.856	5.2E-06	-40.7014	-0.7294	315.546
3224	0.5	Extremo 2A	36.618	390.653	5.2E-06	-40.7014	-0.7294	125.669
3224	1	Extremo 2A	36.618	412.451	5.2E-06	-40.7014	-0.7294	-75.1073
3225	0	Extremo 1A	36.618	462.815	4.1E-06	-62.3175	-0.7294	-88.122
3225	0.5	Extremo 1A	36.618	484.613	4.1E-06	-62.3175	-0.7294	-324.979
3225	1	Extremo 1A	36.618	506.41	4.1E-06	-62.3175	-0.7294	-572.735
3225	0	Extremo 2A	36.618	462.818	4.1E-06	-62.3177	-0.7294	-88.1413
3225	0.5	Extremo 2A	36.618	484.615	4.1E-06	-62.3177	-0.7294	-324.999
3225	1	Extremo 2A	36.618	506.413	4.1E-06	-62.3177	-0.7294	-572.756
3226	0	Extremo 1A	36.618	529.978	3.3E-06	-95.6852	-0.7294	-601.626
3226	0.5	Extremo 1A	36.618	551.775	3.3E-06	-95.6852	-0.7294	-872.064
3226	1	Extremo 1A	36.618	573.573	3.3E-06	-95.6852	-0.7294	-1153.4
3226	0	Extremo 2A	36.618	529.98	3.3E-06	-95.6857	-0.7294	-601.648
3226	0.5	Extremo 2A	36.618	551.777	3.3E-06	-95.6857	-0.7294	-872.087
3226	1	Extremo 2A	36.618	573.575	3.3E-06	-95.6857	-0.7294	-1153.42
3227	0	Extremo 1A	36.618	418.99	2.6E-06	-105.683	-0.7294	-1219.32
3227	0.5	Extremo 1A	36.618	440.788	2.6E-06	-105.683	-0.7294	-1434.27
3227	1	Extremo 1A	36.618	462.585	2.6E-06	-105.683	-0.7294	-1660.11
3227	0	Extremo 2A	36.618	418.99	2.6E-06	-105.683	-0.7294	-1219.35
3227	0.5	Extremo 2A	36.618	440.788	2.6E-06	-105.683	-0.7294	-1434.29
3227	1	Extremo 2A	36.618	462.585	2.6E-06	-105.683	-0.7294	-1660.13
3228	0	Extremo 1A	36.618	-461.027	2.1E-06	105.664	-0.7294	-1660.11
3228	0.5	Extremo 1A	36.618	-439.229	2.1E-06	105.664	-0.7294	-1435.05
3228	1	Extremo 1A	36.618	-417.432	2.1E-06	105.664	-0.7294	-1220.88
3228	0	Extremo 2A	36.618	-461.033	2.1E-06	105.665	-0.7294	-1660.14
3228	0.5	Extremo 2A	36.618	-439.235	2.1E-06	105.665	-0.7294	-1435.07
3228	1	Extremo 2A	36.618	-417.438	2.1E-06	105.665	-0.7294	-1220.9
3229	0	Extremo 1A	36.618	-572.014	1.7E-06	95.6665	-0.7294	-1154.97
3229	0.5	Extremo 1A	36.618	-550.217	1.7E-06	95.6665	-0.7294	-874.413
3229	1	Extremo 1A	36.618	-528.419	1.7E-06	95.6665	-0.7294	-604.754
3229	0	Extremo 2A	36.618	-572.022	1.7E-06	95.6671	-0.7294	-1154.99

3229	0.5	Extremo 2A	36.618	-550.225	1.7E-06	95.6671	-0.7294	-874.427
3229	1	Extremo 2A	36.618	-528.427	1.7E-06	95.6671	-0.7294	-604.764
3230	0	Extremo 1A	36.618	-504.852	1.3E-06	62.2987	-0.7294	-575.871
3230	0.5	Extremo 1A	36.618	-483.054	1.3E-06	62.2987	-0.7294	-328.894
3230	1	Extremo 1A	36.618	-461.257	1.3E-06	62.2987	-0.7294	-92.8161
3230	0	Extremo 2A	36.618	-504.86	1.3E-06	62.299	-0.7294	-575.88
3230	0.5	Extremo 2A	36.618	-483.062	1.3E-06	62.299	-0.7294	-328.899
3230	1	Extremo 2A	36.618	-461.265	1.3E-06	62.299	-0.7294	-92.8174
3231	0	Extremo 1A	36.618	-410.89	1.1E-06	40.6823	-0.7294	-79.7899
3231	0.5	Extremo 1A	36.618	-389.093	1.1E-06	40.6823	-0.7294	120.206
3231	1	Extremo 1A	36.618	-367.295	1.1E-06	40.6823	-0.7294	309.303
3231	0	Extremo 2A	36.618	-410.898	1.1E-06	40.6824	-0.7294	-79.791
3231	0.5	Extremo 2A	36.618	-389.101	1.1E-06	40.6824	-0.7294	120.209
3231	1	Extremo 2A	36.618	-367.303	1.1E-06	40.6824	-0.7294	309.31
3232	0	Extremo 1A	36.618	-313.627	8.4E-07	27.387	-0.7294	315.913
3232	0.5	Extremo 1A	36.618	-291.83	8.4E-07	27.387	-0.7294	467.278
3232	1	Extremo 1A	36.618	-270.032	8.4E-07	27.387	-0.7294	607.743
3232	0	Extremo 2A	36.618	-313.636	8.4E-07	27.3871	-0.7294	315.92
3232	0.5	Extremo 2A	36.618	-291.838	8.4E-07	27.3871	-0.7294	467.289
3232	1	Extremo 2A	36.618	-270.041	8.4E-07	27.3871	-0.7294	607.759
3233	0	Extremo 1A	36.618	-216.239	6.7E-07	17.4514	-0.7294	611.153
3233	0.5	Extremo 1A	36.618	-194.442	6.7E-07	17.4514	-0.7294	713.824
3233	1	Extremo 1A	36.618	-172.644	6.7E-07	17.4514	-0.7294	805.595
3233	0	Extremo 2A	36.618	-216.248	6.7E-07	17.4515	-0.7294	611.169
3233	0.5	Extremo 2A	36.618	-194.45	6.7E-07	17.4515	-0.7294	713.843
3233	1	Extremo 2A	36.618	-172.653	6.7E-07	17.4515	-0.7294	805.619
3234	0	Extremo 1A	36.618	-119.176	5.3E-07	8.59	-0.7294	807.223
3234	0.5	Extremo 1A	36.618	-97.378	5.3E-07	8.59	-0.7294	861.361
3234	1	Extremo 1A	36.618	-75.581	5.3E-07	8.59	-0.7294	904.601
3234	0	Extremo 2A	36.618	-119.184	5.3E-07	8.5901	-0.7294	807.246
3234	0.5	Extremo 2A	36.618	-97.386	5.3E-07	8.5901	-0.7294	861.389
3234	1	Extremo 2A	36.618	-75.589	5.3E-07	8.5901	-0.7294	904.632
3235	0	Extremo 1A	36.618	-22.339	4.2E-07	0.0072	-0.7294	905.085
3235	0.5	Extremo 1A	36.618	-0.542	4.2E-07	0.0072	-0.7294	910.806
3235	1	Extremo 1A	36.618	21.256	4.2E-07	0.0072	-0.7294	905.627
3235	0	Extremo 2A	36.618	-22.348	4.2E-07	0.0073	-0.7294	905.117
3235	0.5	Extremo 2A	36.618	-0.55	4.2E-07	0.0073	-0.7294	910.841
3235	1	Extremo 2A	36.618	21.247	4.2E-07	0.0073	-0.7294	905.667
3236	0	Extremo 1A	36.618	74.497	3.3E-07	-8.575	-0.7294	905.151
3236	0.5	Extremo 1A	36.618	96.294	3.3E-07	-8.575	-0.7294	862.453
3236	1	Extremo 1A	36.618	118.092	3.3E-07	-8.575	-0.7294	808.857
3236	0	Extremo 2A	36.618	74.489	3.3E-07	-8.5749	-0.7294	905.191
3236	0.5	Extremo 2A	36.618	96.286	3.3E-07	-8.5749	-0.7294	862.497
3236	1	Extremo 2A	36.618	118.084	3.3E-07	-8.5749	-0.7294	808.905
3237	0	Extremo 1A	36.618	171.561	2.6E-07	-17.4344	-0.7294	807.24
3237	0.5	Extremo 1A	36.618	193.358	2.6E-07	-17.4344	-0.7294	716.01
3237	1	Extremo 1A	36.618	215.156	2.6E-07	-17.4344	-0.7294	613.882
3237	0	Extremo 2A	36.618	171.553	2.6E-07	-17.4343	-0.7294	807.288
3237	0.5	Extremo 2A	36.618	193.35	2.6E-07	-17.4343	-0.7294	716.062
3237	1	Extremo 2A	36.618	215.148	2.6E-07	-17.4343	-0.7294	613.938
3238	0	Extremo 1A	36.618	268.949	2.1E-07	-27.3641	-0.7294	610.486
3238	0.5	Extremo 1A	36.618	290.747	2.1E-07	-27.3641	-0.7294	470.561
3238	1	Extremo 1A	36.618	312.544	2.1E-07	-27.3641	-0.7294	319.739
3238	0	Extremo 2A	36.618	268.941	2.1E-07	-27.3639	-0.7294	610.542
3238	0.5	Extremo 2A	36.618	290.739	2.1E-07	-27.3639	-0.7294	470.622
3238	1	Extremo 2A	36.618	312.536	2.1E-07	-27.3639	-0.7294	319.803
3239	0	Extremo 1A	36.618	366.216	1.7E-07	-40.6431	-0.7294	313.15
3239	0.5	Extremo 1A	36.618	388.014	1.7E-07	-40.6431	-0.7294	124.593
3239	1	Extremo 1A	36.618	409.811	1.7E-07	-40.6431	-0.7294	-74.8637
3239	0	Extremo 2A	36.618	366.208	1.6E-07	-40.6427	-0.7294	313.215
3239	0.5	Extremo 2A	36.618	388.006	1.6E-07	-40.6427	-0.7294	124.662
3239	1	Extremo 2A	36.618	409.803	1.6E-07	-40.6427	-0.7294	-74.7908
3240	0	Extremo 1A	36.618	460.197	1.3E-07	-62.2194	-0.7294	-87.8518
3240	0.5	Extremo 1A	36.618	481.994	1.3E-07	-62.2194	-0.7294	-323.4
3240	1	Extremo 1A	36.618	503.792	1.3E-07	-62.2194	-0.7294	-569.846
3240	0	Extremo 2A	36.618	460.189	1.3E-07	-62.2185	-0.7294	-87.7785
3240	0.5	Extremo 2A	36.618	481.986	1.3E-07	-62.2185	-0.7294	-323.322
3240	1	Extremo 2A	36.618	503.784	1.3E-07	-62.2185	-0.7294	-569.765
3241	0	Extremo 1A	36.618	527.447	1E-07	-95.5105	-0.7294	-598.655
3241	0.5	Extremo 1A	36.618	549.244	1E-07	-95.5105	-0.7294	-867.828
3241	1	Extremo 1A	36.618	571.042	1E-07	-95.5105	-0.7294	-1147.9
3241	0	Extremo 2A	36.618	527.44	1E-07	-95.5087	-0.7294	-598.573
3241	0.5	Extremo 2A	36.618	549.238	1E-07	-95.5087	-0.7294	-867.743
3241	1	Extremo 2A	36.618	571.035	1E-07	-95.5087	-0.7294	-1147.81
3242	0	Extremo 1A	36.618	416.938	8.2E-08	-105.464	-0.7294	-1213.66
3242	0.5	Extremo 1A	36.618	438.736	8.2E-08	-105.464	-0.7294	-1427.58
3242	1	Extremo 1A	36.618	460.533	8.2E-08	-105.464	-0.7294	-1652.4
3242	0	Extremo 2A	36.618	416.937	8.2E-08	-105.462	-0.7294	-1213.57
3242	0.5	Extremo 2A	36.618	438.735	8.2E-08	-105.462	-0.7294	-1427.49
3242	1	Extremo 2A	36.618	460.532	8.2E-08	-105.462	-0.7294	-1652.31
3243	0	Extremo 1A	36.618	-460.975	6.5E-08	105.469	-0.7294	-1652.4
3243	0.5	Extremo 1A	36.618	-439.178	6.5E-08	105.469	-0.7294	-1427.36
3243	1	Extremo 1A	36.618	-417.38	6.5E-08	105.469	-0.7294	-1213.22
3243	0	Extremo 2A	36.618	-460.951	6.5E-08	105.467	-0.7294	-1652.31
3243	0.5	Extremo 2A	36.618	-439.154	6.5E-08	105.467	-0.7294	-1427.28
3243	1	Extremo 2A	36.618	-417.356	6.5E-08	105.467	-0.7294	-1213.15
3244	0	Extremo 1A	36.618	-571.484	5.1E-08	95.5155	-0.7294	-1147.45
3244	0.5	Extremo 1A	36.618	-549.686	5.1E-08	95.5155	-0.7294	-867.162
3244	1	Extremo 1A	36.618	-527.889	5.1E-08	95.5155	-0.7294	-597.768
3244	0	Extremo 2A	36.618	-571.454	5.1E-08	95.5134	-0.7294	-1147.39
3244	0.5	Extremo 2A	36.618	-549.657	5.1E-08	95.5134	-0.7294	-867.111
3244	1	Extremo 2A	36.618	-527.859	5.1E-08	95.5134	-0.7294	-597.732
3245	0	Extremo 1A	36.618	-504.234	4.1E-08	62.2244	-0.7294	-568.957
3245	0.5	Extremo 1A	36.618	-482.436	4.1E-08	62.2244	-0.7294	-322.289
3245	1	Extremo 1A	36.618	-460.639	4.1E-08	62.2244	-0.7294	-86.5204
3245	0	Extremo 2A	36.618	-504.203	4E-08	62.2232	-0.7294	-568.921
3245	0.5	Extremo 2A	36.618	-482.405	4E-08	62.2232	-0.7294	-322.269
3245	1	Extremo 2A	36.618	-460.608	4E-08	62.2232	-0.7294	-86.5157
3246	0	Extremo 1A	36.618	-410.253	3.2E-08	40.6482	-0.7294	-73.5301
3246	0.5	Extremo 1A	36.618	-388.456	3.2E-08	40.6482	-0.7294	126.147
3246	1	Extremo 1A	36.618	-366.658	3.2E-08	40.6482	-0.7294	314.926
3246	0	Extremo 2A	36.618	-410.223	3.2E-08	40.6475	-0.7294	-73.5259
3246	0.5	Extremo 2A	36.618	-388.425	3.2E-08	40.6475	-0.7294	126.136
3246	1	Extremo 2A	36.618	-366.628	3.2E-08	40.6475	-0.7294	314.899
3247	0	Extremo 1A	36.618	-312.986	2.6E-08	27.3692	-0.7294	321.517
3247	0.5	Extremo 1A	36.618	-291.189	2.6E-08	27.3692	-0.7294	472.56
3247	1	Extremo 1A	36.618	-269.391	2.6E-08	27.3692	-0.7294	612.705
3247	0	Extremo 2A	36.618	-312.955	2.5E-08	27.3688	-0.7294	321.49
3247	0.5	Extremo 2A	36.618	-291.158	2.5E-08	27.3688	-0.7294	472.518
3247	1	Extremo 2A	36.618	-269.36	2.5E-08	27.3688	-0.7294	612.647
3248	0	Extremo 1A	36.618	-215.598	2E-08	17.4397	-0.7294	616.104
3248	0.5	Extremo 1A	36.618	-193.8	2E-08	17.4397	-0.7294	718.453
3248	1	Extremo 1A	36.618	-172.003	2E-08	17.4397	-0.7294	809.904
3248	0	Extremo 2A	36.618	-215.567	2E-08	17.4393	-0.7294	616.046
3248	0.5	Extremo 2A	36.618	-193.769	2E-08	17.4393	-0.7294	718.38
3248	1	Extremo 2A	36.618	-171.972	2E-08	17.4393	-0.7294	809.815
3249	0	Extremo 1A	36.618	-118.534	1.6E-08	8.5806	-0.7294	811.524
3249	0.5	Extremo 1A	36.618	-96.736	1.6E-08	8.5806	-0.7294	865.341
3249	1	Extremo 1A	36.618	-74.939	1.6E-08	8.5806	-0.7294	908.26
3249	0	Extremo 2A	36.618	-118.503	1.5E-08	8.5802	-0.7294	811.434
3249	0.5	Extremo 2A	36.618	-96.705	1.5E-08	8.5802	-0.7294	865.236
3249	1	Extremo 2A	36.618	-74.908	1.5E-08	8.5802	-0.7294	908.14
3250	0	Extremo 1A	36.618	-21.698	1.3E-08	-0.0013	-0.7294	908.739
3250	0.5	Extremo 1A	36.618	0.1	1.3E-08	-0.0013	-0.7294	914.139
3250	1	Extremo 1A	36.618	21.897	1.3E-08	-0.0013	-0.7294	908.639
3250	0	Extremo 2A	36.618	-21.667	1.1E-08	-0.0017	-0.7294	908.619
3250	0.5	Extremo 2A	36.618	0.131	1.1E-08	-0.0017	-0.7294	914.003
3250	1	Extremo 2A	36.618	21.928	1.1E-08	-0.0017	-0.7294	908.488
3251	0	Extremo 1A	36.618	75.139	1E-08	-8.5833	-0.7294	908.159
3251	0.5	Extremo 1A	36.618	96.936	1E-08	-8.5833	-0.7294	865.14
3251	1	Extremo 1A	36.618	118.734	1E-08	-8.5833	-0.7294	811.222
3251	0	Extremo 2A	36.618	75.169	8.5E-09	-8.5838	-0.7294	908.007
3251	0.5	Extremo 2A	36.618	96.967	8.5E-09	-8.5838	-0.7294	864.973
3251	1	Extremo 2A	36.618	118.764	8.5E-09	-8.5838	-0.7294	811.04
3252	0	Extremo 1A	36.618	172.202	8.2E-09	-17.4429	-0.7294	809.601
3252	0.5	Extremo 1A	36.618	194	8.2E-09	-17.4429	-0.7294	718.05
3252	1	Extremo 1A	36.618	215.797	8.2E-09	-17.4429	-0.7294	615.601
3252	0	Extremo 2A	36.618	172.233	5.9E-09	-17.4434	-0.7294	809.418
3252	0.5	Extremo 2A	36.618	194.031	5.9E-09	-17.4434	-0.7294	717.852
3252	1	Extremo 2A	36.618	215.828	5.9E-09	-17.4434	-0.7294	615.387
3253	0	Extremo 1A	36.618	269.591	6.5E-09	-27.3735	-0.7294	612.2
3253	0.5	Extremo 1A	36.618	291.388	6.5E-09	-27.3735	-0.7294	471.955
3253	1	Extremo 1A	36.618	313.186	6.5E-09	-27.3735	-0.7294	320.811
3253	0	Extremo 2A	36.618	269.622	3.6E-09	-27.3743	-0.7294	611.986

3253	0.5	Extremo 2A	36.618	291.419	3.6E-09	-27.3743	-0.7294	471.725
3253	1	Extremo 2A	36.618	313.217	3.6E-09	-27.3743	-0.7294	320.566
3254	0	Extremo 1A	36.618	366.857	5.2E-09	-40.6554	-0.7294	314.217
3254	0.5	Extremo 1A	36.618	388.655	5.2E-09	-40.6554	-0.7294	125.339
3254	1	Extremo 1A	36.618	410.452	5.2E-09	-40.6554	-0.7294	-74.4381
3254	0	Extremo 2A	36.618	366.888	1.4E-09	-40.657	-0.7294	313.971
3254	0.5	Extremo 2A	36.618	388.685	1.4E-09	-40.657	-0.7294	125.077
3254	1	Extremo 2A	36.618	410.483	1.4E-09	-40.657	-0.7294	-74.7149
3255	0	Extremo 1A	36.618	460.834	4E-09	-62.239	-0.7294	-87.4355
3255	0.5	Extremo 1A	36.618	482.632	4E-09	-62.239	-0.7294	-323.302
3255	1	Extremo 1A	36.618	504.429	4E-09	-62.239	-0.7294	-570.067
3255	0	Extremo 2A	36.618	460.864	-7.6E-10	-62.2424	-0.7294	-87.7139
3255	0.5	Extremo 2A	36.618	482.661	-7.6E-10	-62.2424	-0.7294	-323.595
3255	1	Extremo 2A	36.618	504.459	-7.6E-10	-62.2424	-0.7294	-570.375
3256	0	Extremo 1A	36.618	528.068	3.1E-09	-95.5443	-0.7294	-598.892
3256	0.5	Extremo 1A	36.618	549.866	3.1E-09	-95.5443	-0.7294	-868.376
3256	1	Extremo 1A	36.618	571.663	3.1E-09	-95.5443	-0.7294	-1148.76
3256	0	Extremo 2A	36.618	528.094	-3E-09	-95.5511	-0.7294	-599.204
3256	0.5	Extremo 2A	36.618	549.892	-3E-09	-95.5511	-0.7294	-868.7
3256	1	Extremo 2A	36.618	571.689	-3E-09	-95.5511	-0.7294	-1149.1
3257	0	Extremo 1A	36.618	417.471	2.2E-09	-105.506	-0.7294	-1214.55
3257	0.5	Extremo 1A	36.618	439.269	2.2E-09	-105.506	-0.7294	-1428.74
3257	1	Extremo 1A	36.618	461.066	2.2E-09	-105.506	-0.7294	-1653.82
3257	0	Extremo 2A	36.618	417.475	-5.5E-09	-105.515	-0.7294	-1214.9
3257	0.5	Extremo 2A	36.618	439.273	-5.5E-09	-105.515	-0.7294	-1429.08
3257	1	Extremo 2A	36.618	461.07	-5.5E-09	-105.515	-0.7294	-1654.17
3258	0	Extremo 1A	36.618	-460.83	1.4E-09	105.504	-0.7294	-1653.82
3258	0.5	Extremo 1A	36.618	-439.032	1.4E-09	105.504	-0.7294	-1428.85
3258	1	Extremo 1A	36.618	-417.235	1.4E-09	105.504	-0.7294	-1214.79
3258	0	Extremo 2A	36.618	-460.921	-8.3E-09	105.513	-0.7294	-1654.17
3258	0.5	Extremo 2A	36.618	-439.123	-8.3E-09	105.513	-0.7294	-1429.16
3258	1	Extremo 2A	36.618	-417.326	-8.3E-09	105.513	-0.7294	-1215.05
3259	0	Extremo 1A	36.618	-571.427	7E-10	95.5416	-0.7294	-1149
3259	0.5	Extremo 1A	36.618	-549.629	7E-10	95.5416	-0.7294	-868.732
3259	1	Extremo 1A	36.618	-527.832	7E-10	95.5416	-0.7294	-599.366
3259	0	Extremo 2A	36.618	-571.539	-1.2E-08	95.5495	-0.7294	-1149.25
3259	0.5	Extremo 2A	36.618	-549.742	-1.2E-08	95.5495	-0.7294	-868.926
3259	1	Extremo 2A	36.618	-527.944	-1.2E-08	95.5495	-0.7294	-599.504
3260	0	Extremo 1A	36.618	-504.193	-6.1E-11	62.2363	-0.7294	-570.542
3260	0.5	Extremo 1A	36.618	-482.395	-6.1E-11	62.2363	-0.7294	-323.895
3260	1	Extremo 1A	36.618	-460.598	-6.1E-11	62.2363	-0.7294	-88.147
3260	0	Extremo 2A	36.618	-504.309	-1.6E-08	62.2407	-0.7294	-570.677
3260	0.5	Extremo 2A	36.618	-482.512	-1.6E-08	62.2407	-0.7294	-323.972
3260	1	Extremo 2A	36.618	-460.714	-1.6E-08	62.2407	-0.7294	-88.165
3261	0	Extremo 1A	36.618	-410.216	-8.9E-10	40.6527	-0.7294	-75.1508
3261	0.5	Extremo 1A	36.618	-388.419	-8.9E-10	40.6527	-0.7294	124.508
3261	1	Extremo 1A	36.618	-366.621	-8.9E-10	40.6527	-0.7294	313.268
3261	0	Extremo 2A	36.618	-410.333	-2.1E-08	40.6553	-0.7294	-75.1668
3261	0.5	Extremo 2A	36.618	-388.536	-2.1E-08	40.6553	-0.7294	124.55
3261	1	Extremo 2A	36.618	-366.738	-2.1E-08	40.6553	-0.7294	313.369
3262	0	Extremo 1A	36.618	-312.95	-1.8E-09	27.3707	-0.7294	319.861
3262	0.5	Extremo 1A	36.618	-291.152	-1.8E-09	27.3707	-0.7294	470.887
3262	1	Extremo 1A	36.618	-269.355	-1.8E-09	27.3707	-0.7294	611.014
3262	0	Extremo 2A	36.618	-313.067	-2.7E-08	27.3726	-0.7294	319.964
3262	0.5	Extremo 2A	36.618	-291.27	-2.7E-08	27.3726	-0.7294	471.048
3262	1	Extremo 2A	36.618	-269.472	-2.7E-08	27.3726	-0.7294	611.233
3263	0	Extremo 1A	36.618	-215.561	-2.9E-09	17.44	-0.7294	614.413
3263	0.5	Extremo 1A	36.618	-193.764	-2.9E-09	17.44	-0.7294	716.745
3263	1	Extremo 1A	36.618	-171.966	-2.9E-09	17.44	-0.7294	808.177
3263	0	Extremo 2A	36.618	-215.679	-3.5E-08	17.4417	-0.7294	614.634
3263	0.5	Extremo 2A	36.618	-193.881	-3.5E-08	17.4417	-0.7294	717.024
3263	1	Extremo 2A	36.618	-172.084	-3.5E-08	17.4417	-0.7294	808.515
3264	0	Extremo 1A	36.618	-118.497	-4.2E-09	8.5804	-0.7294	809.797
3264	0.5	Extremo 1A	36.618	-96.7	-4.2E-09	8.5804	-0.7294	863.596
3264	1	Extremo 1A	36.618	-74.902	-4.2E-09	8.5804	-0.7294	906.497
3264	0	Extremo 2A	36.618	-118.615	-4.4E-08	8.5819	-0.7294	810.136
3264	0.5	Extremo 2A	36.618	-96.817	-4.4E-08	8.5819	-0.7294	863.994
3264	1	Extremo 2A	36.618	-75.02	-4.4E-08	8.5819	-0.7294	906.953
3265	0	Extremo 1A	36.618	-21.661	-5.8E-09	-0.0018	-0.7294	906.976
3265	0.5	Extremo 1A	36.618	0.136	-5.8E-09	-0.0018	-0.7294	912.357
3265	1	Extremo 1A	36.618	21.934	-5.8E-09	-0.0018	-0.7294	906.84
3265	0	Extremo 2A	36.618	-21.779	-5.6E-08	-0.00022	-0.7294	907.433
3265	0.5	Extremo 2A	36.618	0.019	-5.6E-08	-0.00022	-0.7294	912.873
3265	1	Extremo 2A	36.618	21.816	-5.6E-08	-0.00022	-0.7294	907.414
3266	0	Extremo 1A	36.618	75.175	-7.8E-09	-8.5841	-0.7294	906.359
3266	0.5	Extremo 1A	36.618	96.972	-7.8E-09	-8.5841	-0.7294	863.322
3266	1	Extremo 1A	36.618	118.77	-7.8E-09	-8.5841	-0.7294	809.386
3266	0	Extremo 2A	36.618	75.058	-7.2E-08	-8.5824	-0.7294	906.934
3266	0.5	Extremo 2A	36.618	96.855	-7.2E-08	-8.5824	-0.7294	863.956
3266	1	Extremo 2A	36.618	118.653	-7.2E-08	-8.5824	-0.7294	810.079
3267	0	Extremo 1A	36.618	172.239	-1E-08	-17.4443	-0.7294	807.763
3267	0.5	Extremo 1A	36.618	194.036	-1E-08	-17.4443	-0.7294	716.195
3267	1	Extremo 1A	36.618	215.834	-1E-08	-17.4443	-0.7294	613.727
3267	0	Extremo 2A	36.618	172.122	-9.1E-08	-17.4422	-0.7294	808.458
3267	0.5	Extremo 2A	36.618	193.919	-9.1E-08	-17.4422	-0.7294	716.948
3267	1	Extremo 2A	36.618	215.717	-9.1E-08	-17.4422	-0.7294	614.539
3268	0	Extremo 1A	36.618	269.627	-1.3E-08	-27.3765	-0.7294	610.324
3268	0.5	Extremo 1A	36.618	291.425	-1.3E-08	-27.3765	-0.7294	470.061
3268	1	Extremo 1A	36.618	313.222	-1.3E-08	-27.3765	-0.7294	318.899
3268	0	Extremo 2A	36.618	269.51	-1.2E-07	-27.3733	-0.7294	611.137
3268	0.5	Extremo 2A	36.618	291.307	-1.2E-07	-27.3733	-0.7294	470.933
3268	1	Extremo 2A	36.618	313.105	-1.2E-07	-27.3733	-0.7294	319.83
3269	0	Extremo 1A	36.618	366.892	-1.7E-08	-40.6626	-0.7294	312.3
3269	0.5	Extremo 1A	36.618	388.69	-1.7E-08	-40.6626	-0.7294	123.404
3269	1	Extremo 1A	36.618	410.487	-1.7E-08	-40.6626	-0.7294	-76.3902
3269	0	Extremo 2A	36.618	366.776	-1.5E-07	-40.6566	-0.7294	313.234
3269	0.5	Extremo 2A	36.618	388.573	-1.5E-07	-40.6566	-0.7294	124.397
3269	1	Extremo 2A	36.618	410.371	-1.5E-07	-40.6566	-0.7294	-75.3393
3270	0	Extremo 1A	36.618	460.865	-2.2E-08	-62.2563	-0.7294	-89.396
3270	0.5	Extremo 1A	36.618	482.662	-2.2E-08	-62.2563	-0.7294	-325.278
3270	1	Extremo 1A	36.618	504.46	-2.2E-08	-62.2563	-0.7294	-572.058
3270	0	Extremo 2A	36.618	460.751	-1.8E-07	-62.2435	-0.7294	-88.3389
3270	0.5	Extremo 2A	36.618	482.549	-1.8E-07	-62.2435	-0.7294	-324.164
3270	1	Extremo 2A	36.618	504.346	-1.8E-07	-62.2435	-0.7294	-570.888
3271	0	Extremo 1A	36.618	528.077	-2.8E-08	-95.5809	-0.7294	-600.901
3271	0.5	Extremo 1A	36.618	549.874	-2.8E-08	-95.5809	-0.7294	-870.389
3271	1	Extremo 1A	36.618	571.672	-2.8E-08	-95.5809	-0.7294	-1150.77
3271	0	Extremo 2A	36.618	527.978	-2.3E-07	-95.555	-0.7294	-599.718
3271	0.5	Extremo 2A	36.618	549.776	-2.3E-07	-95.555	-0.7294	-869.156
3271	1	Extremo 2A	36.618	571.573	-2.3E-07	-95.555	-0.7294	-1149.49
3272	0	Extremo 1A	36.618	417.359	-3.6E-08	-105.554	-0.7294	-1216.6
3272	0.5	Extremo 1A	36.618	439.156	-3.6E-08	-105.554	-0.7294	-1430.73
3272	1	Extremo 1A	36.618	460.954	-3.6E-08	-105.554	-0.7294	-1655.76
3272	0	Extremo 2A	36.618	417.343	-2.9E-07	-105.521	-0.7294	-1215.3
3272	0.5	Extremo 2A	36.618	439.14	-2.9E-07	-105.521	-0.7294	-1429.42
3272	1	Extremo 2A	36.618	460.938	-2.9E-07	-105.521	-0.7294	-1654.44
3273	0	Extremo 1A	36.618	-461.471	-4.6E-08	105.56	-0.7294	-1655.76
3273	0.5	Extremo 1A	36.618	-439.674	-4.6E-08	105.56	-0.7294	-1430.47
3273	1	Extremo 1A	36.618	-417.876	-4.6E-08	105.56	-0.7294	-1216.09
3273	0	Extremo 2A	36.618	-461.127	-3.7E-07	105.522	-0.7294	-1654.44
3273	0.5	Extremo 2A	36.618	-439.329	-3.7E-07	105.522	-0.7294	-1429.32
3273	1	Extremo 2A	36.618	-417.532	-3.7E-07	105.522	-0.7294	-1215.11
3274	0	Extremo 1A	36.618	-572.189	-5.9E-08	95.5869	-0.7294	-1150.25
3274	0.5	Extremo 1A	36.618	-550.391	-5.9E-08	95.5869	-0.7294	-869.609
3274	1	Extremo 1A	36.618	-528.594	-5.9E-08	95.5869	-0.7294	-599.863
3274	0	Extremo 2A	36.618	-571.762	-4.6E-07	95.5563	-0.7294	-1149.3
3274	0.5	Extremo 2A	36.618	-549.964	-4.6E-07	95.5563	-0.7294	-868.872
3274	1	Extremo 2A	36.618	-528.167	-4.6E-07	95.5563	-0.7294	-599.339
3275	0	Extremo 1A	36.618	-504.977	-7.4E-08	62.2623	-0.7294	-571.018
3275	0.5	Extremo 1A	36.618	-483.179	-7.4E-08	62.2623	-0.7294	-323.979
3275	1	Extremo 1A	36.618	-461.382	-7.4E-08	62.2623	-0.7294	-87.8384
3275	0	Extremo 2A	36.618	-504.535	-5.8E-07	62.2448	-0.7294	-570.507
3275	0.5	Extremo 2A	36.618	-482.738	-5.8E-07	62.2448	-0.7294	-323.689
3275	1	Extremo 2A	36.618	-460.94	-5.8E-07	62.2448	-0.7294	-87.7699
3276	0	Extremo 1A	36.618	-411.005	-9.4E-08	40.6686	-0.7294	-74.8301
3276	0.5	Extremo 1A	36.618	-389.207	-9.4E-08	40.6686	-0.7294	125.223
3276	1	Extremo 1A	36.618	-367.41	-9.4E-08	40.6686	-0.7294	314.377
3276	0	Extremo 2A	36.618	-410.56	-7.3E-07	40.6579	-0.7294	-74.7694
3276	0.5	Extremo 2A	36.618	-388.762	-7.3E-07	40.6579	-0.7294	125.061
3276	1	Extremo 2A	36.618	-366.965	-7.3E-07	40.6579	-0.7294	313.993
3277	0	Extremo 1A	36.618	-313.739	-1.2E-07	27.3826	-0.7294	320.979
3277	0.5	Extremo 1A	36.618	-291.942	-1.2E-07	27.3826	-0.7294	472.399
3277	1	Extremo 1A	36.618	-270.144	-1.2E-07	27.3826	-0.7294	612.921
3277	0	Extremo 2A	36.618	-313.294	-9.2E-07	27.3746	-0.7294	320.59

3277	0.5	Extremo 2A	36.618	-291.496	-9.2E-07	27.3746	-0.7294	471.787
3277	1	Extremo 2A	36.618	-269.699	-9.2E-07	27.3746	-0.7294	612.086
3278	0	Extremo 1A	36.618	-216.351	-1.5E-07	17.4506	-0.7294	616.327
3278	0.5	Extremo 1A	36.618	-194.553	-1.5E-07	17.4506	-0.7294	719.053
3278	1	Extremo 1A	36.618	-172.756	-1.5E-07	17.4506	-0.7294	810.88
3278	0	Extremo 2A	36.618	-215.905	-1.1E-06	17.4436	-0.7294	615.488
3278	0.5	Extremo 2A	36.618	-194.108	-1.1E-06	17.4436	-0.7294	717.992
3278	1	Extremo 2A	36.618	-172.31	-1.1E-06	17.4436	-0.7294	809.596
3279	0	Extremo 1A	36.618	-119.287	-1.9E-07	8.5907	-0.7294	812.506
3279	0.5	Extremo 1A	36.618	-97.49	-1.9E-07	8.5907	-0.7294	866.7
3279	1	Extremo 1A	36.618	-75.692	-1.9E-07	8.5907	-0.7294	909.996
3279	0	Extremo 2A	36.618	-118.841	-1.4E-06	8.5839	-0.7294	811.219
3279	0.5	Extremo 2A	36.618	-97.044	-1.4E-06	8.5839	-0.7294	865.19
3279	1	Extremo 2A	36.618	-75.246	-1.4E-06	8.5839	-0.7294	908.263
3280	0	Extremo 1A	36.618	-22.451	-2.4E-07	0.0088	-0.7294	910.48
3280	0.5	Extremo 1A	36.618	-0.653	-2.4E-07	0.0088	-0.7294	916.257
3280	1	Extremo 1A	36.618	21.144	-2.4E-07	0.0088	-0.7294	911.134
3280	0	Extremo 2A	36.618	-22.005	-1.8E-06	0.0019	-0.7294	908.744
3280	0.5	Extremo 2A	36.618	-0.208	-1.8E-06	0.0019	-0.7294	914.298
3280	1	Extremo 2A	36.618	21.59	-1.8E-06	0.0019	-0.7294	908.952
3281	0	Extremo 1A	36.618	74.385	-3E-07	-8.5724	-0.7294	910.659
3281	0.5	Extremo 1A	36.618	96.183	-3E-07	-8.5724	-0.7294	868.017
3281	1	Extremo 1A	36.618	117.98	-3E-07	-8.5724	-0.7294	814.477
3281	0	Extremo 2A	36.618	74.831	-2.2E-06	-8.5799	-0.7294	908.474
3281	0.5	Extremo 2A	36.618	96.628	-2.2E-06	-8.5799	-0.7294	865.609
3281	1	Extremo 2A	36.618	118.426	-2.2E-06	-8.5799	-0.7294	811.845
3282	0	Extremo 1A	36.618	171.449	-3.8E-07	-17.4299	-0.7294	812.863
3282	0.5	Extremo 1A	36.618	193.246	-3.8E-07	-17.4299	-0.7294	721.689
3282	1	Extremo 1A	36.618	215.044	-3.8E-07	-17.4299	-0.7294	619.617
3282	0	Extremo 2A	36.618	171.895	-2.8E-06	-17.4387	-0.7294	810.227
3282	0.5	Extremo 2A	36.618	193.693	-2.8E-06	-17.4387	-0.7294	718.83
3282	1	Extremo 2A	36.618	215.49	-2.8E-06	-17.4387	-0.7294	616.534
3283	0	Extremo 1A	36.618	268.838	-4.8E-07	-27.3548	-0.7294	616.227
3283	0.5	Extremo 1A	36.618	290.636	-4.8E-07	-27.3548	-0.7294	476.359
3283	1	Extremo 1A	36.618	312.433	-4.8E-07	-27.3548	-0.7294	325.592
3283	0	Extremo 2A	36.618	269.284	-3.4E-06	-27.3672	-0.7294	613.138
3283	0.5	Extremo 2A	36.618	291.082	-3.4E-06	-27.3672	-0.7294	473.046
3283	1	Extremo 2A	36.618	312.879	-3.4E-06	-27.3672	-0.7294	322.056
3284	0	Extremo 1A	36.618	366.109	-6E-07	-40.6213	-0.7294	319.016
3284	0.5	Extremo 1A	36.618	387.906	-6E-07	-40.6213	-0.7294	130.513
3284	1	Extremo 1A	36.618	409.704	-6E-07	-40.6213	-0.7294	-68.8896
3284	0	Extremo 2A	36.618	366.552	-4.3E-06	-40.6437	-0.7294	315.468
3284	0.5	Extremo 2A	36.618	388.35	-4.3E-06	-40.6437	-0.7294	126.743
3284	1	Extremo 2A	36.618	410.147	-4.3E-06	-40.6437	-0.7294	-72.8816
3285	0	Extremo 1A	36.618	460.103	-7.6E-07	-62.1667	-0.7294	-81.8521
3285	0.5	Extremo 1A	36.618	481.9	-7.6E-07	-62.1667	-0.7294	-317.353
3285	1	Extremo 1A	36.618	503.698	-7.6E-07	-62.1667	-0.7294	-563.752
3285	0	Extremo 2A	36.618	460.536	-5.3E-06	-62.2142	-0.7294	-85.8668
3285	0.5	Extremo 2A	36.618	482.333	-5.3E-06	-62.2142	-0.7294	-321.584
3285	1	Extremo 2A	36.618	504.131	-5.3E-06	-62.2142	-0.7294	-568.2
3286	0	Extremo 1A	36.618	527.421	-9.5E-07	-95.399	-0.7294	-592.508
3286	0.5	Extremo 1A	36.618	549.218	-9.5E-07	-95.399	-0.7294	-861.668
3286	1	Extremo 1A	36.618	571.016	-9.5E-07	-95.399	-0.7294	-1141.73
3286	0	Extremo 2A	36.618	527.799	-6.5E-06	-95.4943	-0.7294	-597.003
3286	0.5	Extremo 2A	36.618	549.596	-6.5E-06	-95.4943	-0.7294	-866.351
3286	1	Extremo 2A	36.618	571.394	-6.5E-06	-95.4943	-0.7294	-1146.6
3287	0	Extremo 1A	36.618	417.28	-1.2E-06	-105.32	-0.7294	-1207.38
3287	0.5	Extremo 1A	36.618	439.078	-1.2E-06	-105.32	-0.7294	-1421.47
3287	1	Extremo 1A	36.618	460.875	-1.2E-06	-105.32	-0.7294	-1646.46
3287	0	Extremo 2A	36.618	417.348	-8E-06	-105.439	-0.7294	-1212.35
3287	0.5	Extremo 2A	36.618	439.145	-8E-06	-105.439	-0.7294	-1426.47
3287	1	Extremo 2A	36.618	460.943	-8E-06	-105.439	-0.7294	-1651.49
3288	0	Extremo 1A	36.618	-459.012	-1.5E-06	105.294	-0.7294	-1646.46
3288	0.5	Extremo 1A	36.618	-437.214	-1.5E-06	105.294	-0.7294	-1422.4
3288	1	Extremo 1A	36.618	-415.417	-1.5E-06	105.294	-0.7294	-1209.25
3288	0	Extremo 2A	36.618	-460.326	-9.8E-06	105.453	-0.7294	-1651.49
3288	0.5	Extremo 2A	36.618	-438.528	-9.8E-06	105.453	-0.7294	-1426.78
3288	1	Extremo 2A	36.618	-416.731	-9.8E-06	105.453	-0.7294	-1212.97
3289	0	Extremo 1A	36.618	-569.152	-1.9E-06	95.3734	-0.7294	-1143.6
3289	0.5	Extremo 1A	36.618	-547.354	-1.9E-06	95.3734	-0.7294	-864.476
3289	1	Extremo 1A	36.618	-525.557	-1.9E-06	95.3734	-0.7294	-596.248
3289	0	Extremo 2A	36.618	-570.777	-1.2E-05	95.5084	-0.7295	-1147.22
3289	0.5	Extremo 2A	36.618	-548.98	-1.2E-05	95.5084	-0.7294	-867.282
3289	1	Extremo 2A	36.618	-527.182	-1.2E-05	95.5084	-0.7294	-598.241
3290	0	Extremo 1A	36.618	-501.834	-2.3E-06	62.1409	-0.7294	-567.501
3290	0.5	Extremo 1A	36.618	-480.037	-2.3E-06	62.1409	-0.7294	-322.034
3290	1	Extremo 1A	36.618	-458.239	-2.3E-06	62.1409	-0.7294	-87.4646
3290	0	Extremo 2A	36.618	-503.514	-1.4E-05	62.2282	-0.7295	-569.442
3290	0.5	Extremo 2A	36.618	-481.717	-1.4E-05	62.2282	-0.7294	-323.135
3290	1	Extremo 2A	36.618	-459.919	-1.4E-05	62.2282	-0.7294	-87.7257
3291	0	Extremo 1A	36.618	-407.84	-2.9E-06	40.5954	-0.7294	-74.5112
3291	0.5	Extremo 1A	36.618	-386.043	-2.9E-06	40.5954	-0.7294	123.959
3291	1	Extremo 1A	36.618	-364.245	-2.9E-06	40.5954	-0.7294	311.531
3291	0	Extremo 2A	36.619	-409.531	-1.7E-05	40.6577	-0.7295	-74.744
3291	0.5	Extremo 2A	36.619	-387.733	-1.7E-05	40.6577	-0.7294	124.572
3291	1	Extremo 2A	36.619	-365.936	-1.7E-05	40.6577	-0.7294	312.989
3292	0	Extremo 1A	36.618	-310.57	-3.6E-06	27.3285	-0.7294	318.097
3292	0.5	Extremo 1A	36.618	-288.772	-3.6E-06	27.3285	-0.7294	467.933
3292	1	Extremo 1A	36.618	-266.975	-3.6E-06	27.3285	-0.7294	606.869
3292	0	Extremo 2A	36.619	-312.263	-2.1E-05	27.3809	-0.7295	319.573
3292	0.5	Extremo 2A	36.619	-290.465	-2.1E-05	27.3809	-0.7294	470.255
3292	1	Extremo 2A	36.619	-268.668	-2.1E-05	27.3809	-0.7294	610.038
3293	0	Extremo 1A	36.618	-213.181	-4.4E-06	17.4031	-0.7294	610.249
3293	0.5	Extremo 1A	36.618	-191.383	-4.4E-06	17.4031	-0.7294	711.39
3293	1	Extremo 1A	36.618	-169.586	-4.4E-06	17.4031	-0.7294	801.632
3293	0	Extremo 2A	36.619	-214.874	-2.5E-05	17.452	-0.7295	613.431
3293	0.5	Extremo 2A	36.619	-193.076	-2.5E-05	17.452	-0.7294	715.419
3293	1	Extremo 2A	36.619	-171.279	-2.5E-05	17.452	-0.7294	806.508
3294	0	Extremo 1A	36.618	-116.117	-5.5E-06	8.5447	-0.7294	803.235
3294	0.5	Extremo 1A	36.618	-94.319	-5.5E-06	8.5447	-0.7294	855.844
3294	1	Extremo 1A	36.618	-72.522	-5.5E-06	8.5447	-0.7294	897.554
3294	0	Extremo 2A	36.619	-117.81	-2.9E-05	8.5925	-0.7295	808.122
3294	0.5	Extremo 2A	36.619	-96.013	-2.9E-05	8.5925	-0.7294	861.577
3294	1	Extremo 2A	36.619	-74.215	-2.9E-05	8.5925	-0.7294	904.134
3295	0	Extremo 1A	36.618	-19.28	-6.8E-06	-0.038	-0.7294	898.015
3295	0.5	Extremo 1A	36.618	2.517	-6.8E-06	-0.038	-0.7294	902.206
3295	1	Extremo 1A	36.618	24.315	-6.8E-06	-0.038	-0.7294	895.498
3295	0	Extremo 2A	36.619	-20.975	-3.4E-05	0.0094	-0.7295	904.607
3295	0.5	Extremo 2A	36.619	0.822	-3.4E-05	0.0094	-0.7294	909.645
3295	1	Extremo 2A	36.619	22.62	-3.4E-05	0.0094	-0.7294	903.785
3296	0	Extremo 1A	36.618	77.556	-8.3E-06	-8.6228	-0.7294	894.997
3296	0.5	Extremo 1A	36.618	99.354	-8.3E-06	-8.6228	-0.7294	850.77
3296	1	Extremo 1A	36.618	121.151	-8.3E-06	-8.6228	-0.7294	795.643
3296	0	Extremo 2A	36.619	75.859	-3.9E-05	-8.5752	-0.7295	903.296
3296	0.5	Extremo 2A	36.619	97.657	-3.9E-05	-8.5752	-0.7294	859.917
3296	1	Extremo 2A	36.619	119.454	-3.9E-05	-8.5752	-0.7294	805.639
3297	0	Extremo 1A	36.618	174.621	-1E-05	-17.49	-0.7294	793.994
3297	0.5	Extremo 1A	36.618	196.419	-1E-05	-17.49	-0.7294	701.234
3297	1	Extremo 1A	36.618	218.216	-1E-05	-17.49	-0.7294	597.575
3297	0	Extremo 2A	36.619	172.919	-4.3E-05	-17.4405	-0.7295	804.006
3297	0.5	Extremo 2A	36.619	194.717	-4.3E-05	-17.4405	-0.7294	712.097
3297	1	Extremo 2A	36.619	216.514	-4.3E-05	-17.4405	-0.7294	609.289
3298	0	Extremo 1A	36.618	272.009	-1.2E-05	-27.4416	-0.7295	594.132
3298	0.5	Extremo 1A	36.618	293.806	-1.2E-05	-27.4416	-0.7294	452.679
3298	1	Extremo 1A	36.618	315.604	-1.2E-05	-27.4416	-0.7294	300.326
3298	0	Extremo 2A	36.619	270.3	-4.7E-05	-27.3845	-0.7295	605.869
3298	0.5	Extremo 2A	36.619	292.097	-4.7E-05	-27.3845	-0.7294	465.27
3298	1	Extremo 2A	36.619	313.895	-4.7E-05	-27.3845	-0.7294	313.772
3299	0	Extremo 1A	36.618	369.262	-1.5E-05	-40.7812	-0.7295	293.66
3299	0.5	Extremo 1A	36.618	391.06	-1.5E-05	-40.7812	-0.7294	103.58
3299	1	Extremo 1A	36.618	412.857	-1.5E-05	-40.7812	-0.7294	-97.3995
3299	0	Extremo 2A	36.62	367.546	-4.8E-05	-40.6979	-0.7295	307.145
3299	0.5	Extremo 2A	36.62	389.344	-4.8E-05	-40.6979	-0.7294	117.922
3299	1	Extremo 2A	36.62	411.141	-4.8E-05	-40.6979	-0.7294	-82.1992
3300	0	Extremo 1A	36.619	463.177	-1.8E-05	-62.5085	-0.7295	-110.527
3300	0.5	Extremo 1A	36.619	484.975	-1.8E-05	-62.5085	-0.7294	-347.565
3300	1	Extremo 1A	36.619	506.772	-1.8E-05	-62.5085	-0.7294	-595.502
3300	0	Extremo 2A	36.62	461.471	-4.7E-05	-62.3531	-0.7295	-95.254
3300	0.5	Extremo 2A	36.62	483.269	-4.7E-05	-62.3531	-0.7294	-331.439
3300	1	Extremo 2A	36.62	505.066	-4.7E-05	-62.3531	-0.7294	-578.523
3301	0	Extremo 1A	36.619	530.097	-2.2E-05	-96.0873	-0.7295	-624.589
3301	0.5	Extremo 1A	36.619	551.895	-2.2E-05	-96.0873	-0.7294	-895.087
3301	1	Extremo 1A	36.619	573.692	-2.2E-05	-96.0873	-0.7294	-1176.48
3301	0	Extremo 2A	36.621	528.55	-3.9E-05	-95.7956	-0.7295	-607.451

3301	0.5	Extremo 2A	36.621	550.348	-3.9E-05	-95.7956	-0.7294	-877.176
3301	1	Extremo 2A	36.621	572.145	-3.9E-05	-95.7956	-0.7294	-1157.8
3302	0	Extremo 1A	36.619	417.736	-2.6E-05	-106.191	-0.7295	-1242.82
3302	0.5	Extremo 1A	36.619	439.534	-2.6E-05	-106.191	-0.7294	-1457.14
3302	1	Extremo 1A	36.619	461.331	-2.6E-05	-106.191	-0.7294	-1682.36
3302	0	Extremo 2A	36.622	417.353	-2.3E-05	-105.898	-0.7294	-1223.77
3302	0.5	Extremo 2A	36.622	439.15	-2.3E-05	-105.898	-0.7294	-1437.9
3302	1	Extremo 2A	36.622	460.948	-2.3E-05	-105.898	-0.7294	-1662.92
3303	0	Extremo 1A	36.619	-468.382	-3.1E-05	106.384	-0.7295	-1682.34
3303	0.5	Extremo 1A	36.619	-446.585	-3.1E-05	106.384	-0.7294	-1453.6
3303	1	Extremo 1A	36.619	-424.787	-3.1E-05	106.384	-0.7294	-1235.76
3303	0	Extremo 2A	36.623	-463.256	8.4E-06	105.426	-0.7294	-1662.91
3303	0.5	Extremo 2A	36.623	-441.458	8.4E-06	105.426	-0.7294	-1436.73
3303	1	Extremo 2A	36.623	-419.661	8.4E-06	105.426	-0.7294	-1221.45
3304	0	Extremo 1A	36.619	-580.743	-3.6E-05	96.2807	-0.7295	-1169.39
3304	0.5	Extremo 1A	36.619	-558.945	-3.6E-05	96.2807	-0.7294	-884.465
3304	1	Extremo 1A	36.619	-537.148	-3.6E-05	96.2807	-0.7294	-610.441
3304	0	Extremo 2A	36.624	-574.453	6.1E-05	95.3235	-0.7294	-1155.46
3304	0.5	Extremo 2A	36.624	-552.656	6.1E-05	95.3235	-0.7294	-873.682
3304	1	Extremo 2A	36.624	-530.858	6.1E-05	95.3235	-0.7295	-602.803
3305	0	Extremo 1A	36.619	-513.823	-4.1E-05	62.7024	-0.7295	-581.322
3305	0.5	Extremo 1A	36.619	-492.026	-4.1E-05	62.7024	-0.7294	-329.86
3305	1	Extremo 1A	36.619	-470.228	-4.1E-05	62.7024	-0.7294	-89.2962
3305	0	Extremo 2A	36.625	-507.373	0.00015	61.8817	-0.7294	-573.853
3305	0.5	Extremo 2A	36.625	-485.576	0.00015	61.8817	-0.7294	-325.616
3305	1	Extremo 2A	36.625	-463.778	0.00015	61.8817	-0.7295	-88.2772
3306	0	Extremo 1A	36.619	-419.908	-4.7E-05	40.9758	-0.7295	-76.1371
3306	0.5	Extremo 1A	36.619	-398.111	-4.7E-05	40.9758	-0.7294	128.368
3306	1	Extremo 1A	36.619	-376.313	-4.7E-05	40.9758	-0.7294	321.974
3306	0	Extremo 2A	36.628	-413.446	0.00028	40.2279	-0.7293	-75.1997
3306	0.5	Extremo 2A	36.628	-391.649	0.00028	40.2279	-0.7294	126.074
3306	1	Extremo 2A	36.628	-369.851	0.00028	40.2279	-0.7296	316.449
3307	0	Extremo 1A	36.62	-322.655	-5.1E-05	27.6371	-0.7295	328.673
3307	0.5	Extremo 1A	36.62	-300.858	-5.1E-05	27.6371	-0.7294	484.551
3307	1	Extremo 1A	36.62	-279.06	-5.1E-05	27.6371	-0.7294	629.531
3307	0	Extremo 2A	36.63	-316.196	0.00049	26.9172	-0.7292	323.101
3307	0.5	Extremo 2A	36.63	-294.399	0.00049	26.9172	-0.7294	475.749
3307	1	Extremo 2A	36.63	-272.601	0.00049	26.9172	-0.7297	617.499
3308	0	Extremo 1A	36.62	-225.269	-5.4E-05	17.6866	-0.7295	633.009
3308	0.5	Extremo 1A	36.62	-203.472	-5.4E-05	17.6866	-0.7294	740.194
3308	1	Extremo 1A	36.62	-181.674	-5.4E-05	17.6866	-0.7294	836.48
3308	0	Extremo 2A	36.634	-218.809	0.00079	16.9786	-0.729	620.947
3308	0.5	Extremo 2A	36.634	-197.012	0.00079	16.9786	-0.7294	724.902
3308	1	Extremo 2A	36.634	-175.214	0.00079	16.9786	-0.7298	817.958
3309	0	Extremo 1A	36.62	-128.207	-5.4E-05	8.8208	-0.7295	838.167
3309	0.5	Extremo 1A	36.62	-106.409	-5.4E-05	8.8208	-0.7294	896.821
3309	1	Extremo 1A	36.62	-84.612	-5.4E-05	8.8208	-0.7294	944.576
3309	0	Extremo 2A	36.639	-121.736	0.00125	8.1237	-0.7288	819.624
3309	0.5	Extremo 2A	36.639	-99.939	0.00125	8.1237	-0.7294	875.043
3309	1	Extremo 2A	36.639	-78.141	0.00125	8.1237	-0.7301	919.563
3310	0	Extremo 1A	36.621	-31.376	-4.8E-05	0.2379	-0.7295	945.121
3310	0.5	Extremo 1A	36.621	-9.578	-4.8E-05	0.2379	-0.7294	955.359
3310	1	Extremo 1A	36.621	12.219	-4.8E-05	0.2379	-0.7294	954.699
3310	0	Extremo 2A	36.645	-24.878	0.00192	-0.4403	-0.7285	920.095
3310	0.5	Extremo 2A	36.645	-3.08	0.00192	-0.4403	-0.7295	927.084
3310	1	Extremo 2A	36.645	18.717	0.00192	-0.4403	-0.7304	923.175
3311	0	Extremo 1A	36.622	65.449	-3.3E-05	-8.3407	-0.7294	954.291
3311	0.5	Extremo 1A	36.622	87.247	-3.3E-05	-8.3407	-0.7294	916.117
3311	1	Extremo 1A	36.622	109.044	-3.3E-05	-8.3407	-0.7294	867.045
3311	0	Extremo 2A	36.653	72.004	0.00289	-8.9825	-0.7281	922.764
3311	0.5	Extremo 2A	36.653	93.801	0.00289	-8.9825	-0.7295	881.313
3311	1	Extremo 2A	36.653	115.599	0.00289	-8.9825	-0.7309	828.963
3312	0	Extremo 1A	36.623	162.492	-4.5E-06	-17.1855	-0.7294	865.516
3312	0.5	Extremo 1A	36.623	184.29	-4.5E-06	-17.1855	-0.7294	778.821
3312	1	Extremo 1A	36.623	206.087	-4.5E-06	-17.1855	-0.7294	681.226
3312	0	Extremo 2A	36.664	169.156	0.00429	-17.7602	-0.7274	827.447
3312	0.5	Extremo 2A	36.664	190.953	0.00429	-17.7602	-0.7295	737.419
3312	1	Extremo 2A	36.664	212.751	0.00429	-17.7602	-0.7317	636.494
3313	0	Extremo 1A	36.624	259.852	4.5E-05	-27.0639	-0.7294	677.964
3313	0.5	Extremo 1A	36.624	281.649	4.5E-05	-27.0639	-0.7294	542.589
3313	1	Extremo 1A	36.624	303.447	4.5E-05	-27.0639	-0.7294	396.315
3313	0	Extremo 2A	36.678	266.72	0.00629	-27.5223	-0.7265	633.267
3313	0.5	Extremo 2A	36.678	288.517	0.00629	-27.5223	-0.7296	494.457
3313	1	Extremo 2A	36.678	310.315	0.00629	-27.5223	-0.7328	344.749
3314	0	Extremo 1A	36.626	357.099	0.00013	-40.181	-0.7294	389.952
3314	0.5	Extremo 1A	36.626	378.897	0.00013	-40.181	-0.7294	205.953
3314	1	Extremo 1A	36.626	400.694	0.00013	-40.181	-0.7295	11.055
3314	0	Extremo 2A	36.696	364.351	0.00916	-40.4548	-0.7252	338.454
3314	0.5	Extremo 2A	36.696	386.149	0.00916	-40.4548	-0.7297	150.829
3314	1	Extremo 2A	36.696	407.946	0.00916	-40.4548	-0.7343	-47.6946
3315	0	Extremo 1A	36.628	451.176	0.00026	-61.3243	-0.7293	-1.5124
3315	0.5	Extremo 1A	36.628	472.974	0.00026	-61.3243	-0.7294	-232.55
3315	1	Extremo 1A	36.628	494.771	0.00026	-61.3243	-0.7296	-474.486
3315	0	Extremo 2A	36.72	459.102	0.013	-61.3202	-0.7233	-60.1938
3315	0.5	Extremo 2A	36.72	480.899	0.013	-61.3202	-0.7299	-295.194
3315	1	Extremo 2A	36.72	502.697	0.013	-61.3202	-0.7365	-541.093
3316	0	Extremo 1A	36.631	519.381	0.00046	-93.7945	-0.7292	-502.386
3316	0.5	Extremo 1A	36.631	541.178	0.00046	-93.7945	-0.7294	-767.526
3316	1	Extremo 1A	36.631	562.976	0.00046	-93.7945	-0.7297	-1043.56
3316	0	Extremo 2A	36.752	527.872	0.019	-93.24	-0.7207	-569.214
3316	0.5	Extremo 2A	36.752	549.67	0.019	-93.24	-0.7302	-838.599
3316	1	Extremo 2A	36.752	571.467	0.019	-93.24	-0.7397	-1118.88
3317	0	Extremo 1A	36.634	415.383	0.00076	-103.62	-0.7291	-1107.28
3317	0.5	Extremo 1A	36.634	437.181	0.00076	-103.62	-0.7294	-1320.42
3317	1	Extremo 1A	36.634	458.978	0.00076	-103.62	-0.7298	-1544.46
3317	0	Extremo 2A	36.793	419.856	0.027	-100.934	-0.717	-1184.03
3317	0.5	Extremo 2A	36.793	441.654	0.027	-100.934	-0.7306	-1399.41
3317	1	Extremo 2A	36.793	463.451	0.027	-100.934	-0.7442	-1625.68
3318	0	Extremo 1A	36.639	-432.157	0.00121	100.596	-0.7288	-1544.5
3318	0.5	Extremo 1A	36.639	-410.36	0.00121	100.596	-0.7294	-1333.87
3318	1	Extremo 1A	36.639	-388.562	0.00121	100.596	-0.73	-1134.14
3318	0	Extremo 2A	36.847	-454.899	0.039	112.681	-0.7118	-1625.82
3318	0.5	Extremo 2A	36.847	-433.101	0.039	112.681	-0.7312	-1403.82
3318	1	Extremo 2A	36.847	-411.304	0.039	112.681	-0.7506	-1192.71
3319	0	Extremo 1A	36.646	-536.153	0.00187	90.7698	-0.7285	-1070.49
3319	0.5	Extremo 1A	36.646	-514.356	0.00187	90.7698	-0.7295	-807.863
3319	1	Extremo 1A	36.646	-492.558	0.00187	90.7698	-0.7304	-556.134
3319	0	Extremo 2A	36.918	-562.921	0.055	104.985	-0.7045	-1127.83
3319	0.5	Extremo 2A	36.918	-541.124	0.055	104.985	-0.732	-851.823
3319	1	Extremo 2A	36.918	-519.326	0.055	104.985	-0.7596	-586.71
3320	0	Extremo 1A	36.654	-467.945	0.00282	58.2999	-0.7281	-528.304
3320	0.5	Extremo 1A	36.654	-446.148	0.00282	58.2999	-0.7295	-299.781
3320	1	Extremo 1A	36.654	-424.35	0.00282	58.2999	-0.7309	-82.1563
3320	0	Extremo 2A	37.012	-494.168	0.078	73.0595	-0.6943	-558.853
3320	0.5	Extremo 2A	37.012	-472.37	0.078	73.0595	-0.7333	-317.218
3320	1	Extremo 2A	37.012	-450.573	0.078	73.0595	-0.7723	-86.4825
3321	0	Extremo 1A	36.665	-373.86	0.00421	37.1588	-0.7274	-69.6591
3321	0.5	Extremo 1A	36.665	-352.062	0.00421	37.1588	-0.7295	111.821
3321	1	Extremo 1A	36.665	-330.265	0.00421	37.1588	-0.7316	282.403
3321	0	Extremo 2A	37.136	-399.451	0.11	52.1788	-0.6801	-74.2425
3321	0.5	Extremo 2A	37.136	-377.654	0.11	52.1788	-0.7351	120.034
3321	1	Extremo 2A	37.136	-355.856	0.11	52.1788	-0.7901	303.411
3322	0	Extremo 1A	36.679	-276.595	0.00621	24.0481	-0.7265	288.696
3322	0.5	Extremo 1A	36.679	-254.797	0.00621	24.0481	-0.7296	421.544
3322	1	Extremo 1A	36.679	-233	0.00621	24.0481	-0.7327	543.494
3322	0	Extremo 2A	37.301	-301.886	0.155	39.2087	-0.6602	309.452
3322	0.5	Extremo 2A	37.301	-280.089	0.155	39.2087	-0.7376	454.946
3322	1	Extremo 2A	37.301	-258.291	0.155	39.2087	-0.8149	589.541
3323	0	Extremo 1A	36.698	-179.201	0.00907	14.1857	-0.7252	546.689
3323	0.5	Extremo 1A	36.698	-157.404	0.00907	14.1857	-0.7297	630.84
3323	1	Extremo 1A	36.698	-135.606	0.00907	14.1857	-0.7343	704.092
3323	0	Extremo 2A	37.524	-204.45	0.217	29.361	-0.6326	592.521
3323	0.5	Extremo 2A	37.524	-182.652	0.217	29.361	-0.7411	689.297
3323	1	Extremo 2A	37.524	-160.855	0.217	29.361	-0.8495	775.174
3324	0	Extremo 1A	36.722	-82.09	0.013	5.3769	-0.7233	705.558
3324	0.5	Extremo 1A	36.722	-60.292	0.013	5.3769	-0.7299	741.154
3324	1	Extremo 1A	36.722	-38.495	0.013	5.3769	-0.7365	765.851
3324	0	Extremo 2A	37.833	-107.534	0.303	20.398	-0.5944	776.455
3324	0.5	Extremo 2A	37.833	-85.737	0.303	20.398	-0.7458	824.772
3324	1	Extremo 2A	37.833	-63.939	0.303	20.398	-0.8972	862.191
3325	0	Extremo 1A	36.754	14.867	0.019	-3.127	-0.7207	766.207
3325	0.5	Extremo 1A	36.754	36.665	0.019	-3.127	-0.7302	753.324
3325	1	Extremo 1A	36.754	58.462	0.019	-3.127	-0.7396	729.543
3325	0	Extremo 2A	38.276	-11.076	0.42	11.4644	-0.5419	862.391

3325	0.5	Extremo 2A	38.276	10.721	0.42	11.4644	-0.752	862.479
3325	1	Extremo 2A	38.276	32.519	0.42	11.4644	-0.9622	851.67
3326	0	Extremo 1A	36.796	111.953	0.027	-11.5654	-0.717	728.966
3326	0.5	Extremo 1A	36.796	133.75	0.027	-11.5654	-0.7306	667.54
3326	1	Extremo 1A	36.796	155.548	0.027	-11.5654	-0.7441	595.216
3326	0	Extremo 2A	38.948	85.071	0.578	2.0782	-0.4705	850.984
3326	0.5	Extremo 2A	38.948	106.868	0.578	2.0782	-0.7597	803
3326	1	Extremo 2A	38.948	128.666	0.578	2.0782	-1.0488	744.116
3327	0	Extremo 1A	36.852	209.493	0.039	-20.1735	-0.7118	593.526
3327	0.5	Extremo 1A	36.852	231.29	0.039	-20.1735	-0.7312	483.33
3327	1	Extremo 1A	36.852	253.088	0.039	-20.1735	-0.7505	362.235
3327	0	Extremo 2A	40.052	181.087	0.785	-8.5285	-0.3757	742.427
3327	0.5	Extremo 2A	40.052	202.884	0.785	-8.5285	-0.7681	646.434
3327	1	Extremo 2A	40.052	224.682	0.785	-8.5285	-1.1605	539.543
3328	0	Extremo 1A	36.924	307.763	0.055	-29.7148	-0.7045	358.788
3328	0.5	Extremo 1A	36.924	329.56	0.055	-29.7148	-0.732	199.458
3328	1	Extremo 1A	36.924	351.358	0.055	-29.7148	-0.7595	29.2281
3328	0	Extremo 2A	42.039	277.126	1.038	-22.2995	-0.2559	536.201
3328	0.5	Extremo 2A	42.039	298.924	1.038	-22.2995	-0.7749	392.188
3328	1	Extremo 2A	42.039	320.721	1.038	-22.2995	-1.2938	237.277
3329	0	Extremo 1A	37.02	406.621	0.078	-42.5194	-0.6943	22.5645
3329	0.5	Extremo 1A	37.02	428.419	0.078	-42.5194	-0.7333	-186.196
3329	1	Extremo 1A	37.02	450.216	0.078	-42.5194	-0.7722	-405.854
3329	0	Extremo 2A	45.955	371.39	1.297	-44.0862	-0.1173	229.978
3329	0.5	Extremo 2A	45.955	393.188	1.297	-44.0862	-0.7661	38.8333
3329	1	Extremo 2A	45.955	414.985	1.297	-44.0862	-1.4148	-163.21
3330	0	Extremo 1A	37.146	503.162	0.11	-63.7145	-0.68	-419.251
3330	0.5	Extremo 1A	37.146	524.96	0.11	-63.7145	-0.735	-676.281
3330	1	Extremo 1A	37.146	546.757	0.11	-63.7145	-0.79	-944.211
3330	0	Extremo 2A	54.296	445.644	1.431	-83.3228	0.0425	-181.39
3330	0.5	Extremo 2A	54.296	467.441	1.431	-83.3228	-0.6732	-409.662
3330	1	Extremo 2A	54.296	489.239	1.431	-83.3228	-1.3888	-648.832
3331	0	Extremo 1A	37.314	571.023	0.155	-96.1948	-0.6601	-975.455
3331	0.5	Extremo 1A	37.314	592.821	0.155	-96.1948	-0.7375	-1266.42
3331	1	Extremo 1A	37.314	614.618	0.155	-96.1948	-0.815	-1568.28
3331	0	Extremo 2A	18.31	624.32	1.443	-144.798	0.3566	-683.418
3331	0.5	Extremo 2A	18.31	646.118	1.443	-144.798	-0.3647	-1001.03
3331	1	Extremo 2A	18.31	667.915	1.443	-144.798	-1.0861	-1329.54
3332	0	Extremo 1A	37.541	432.693	0.217	-97.7123	-0.6324	-1643.39
3332	0.5	Extremo 1A	37.541	454.49	0.217	-97.7123	-0.741	-1865.18
3332	1	Extremo 1A	37.541	476.288	0.217	-97.7123	-0.8496	-2097.88
3332	0	Extremo 2A	-17.675	588.607	1.431	-169.74	0.6594	-1400.37
3332	0.5	Extremo 2A	-17.675	610.405	1.431	-169.74	-0.0563	-1700.13
3332	1	Extremo 2A	-17.675	632.202	1.431	-169.74	-0.7719	-2010.78
3333	0	Extremo 1A	37.855	-609.405	0.303	163.112	-0.594	-2098.24
3333	0.5	Extremo 1A	37.855	-587.607	0.303	163.112	-0.7458	-1798.99
3333	1	Extremo 1A	37.855	-565.81	0.303	163.112	-0.8975	-1510.63
3333	0	Extremo 2A	-9.334	-533.545	1.297	98.2195	0.6854	-2003.81
3333	0.5	Extremo 2A	-9.334	-511.747	1.297	98.2195	0.0366	-1742.49
3333	1	Extremo 2A	-9.334	-489.95	1.297	98.2195	-0.6121	-1492.06
3334	0	Extremo 1A	38.305	-748.222	0.421	161.158	-0.5413	-1436.26
3334	0.5	Extremo 1A	38.305	-726.425	0.421	161.158	-0.752	-1067.6
3334	1	Extremo 1A	38.305	-704.627	0.421	161.158	-0.9627	-709.834
3334	0	Extremo 2A	-5.417	-681.693	1.038	96.3672	0.5644	-1413.52
3334	0.5	Extremo 2A	-5.417	-659.895	1.038	96.3672	0.0454	-1078.12
3334	1	Extremo 2A	-5.417	-638.098	1.038	96.3672	-0.4735	-753.623
3335	0	Extremo 1A	38.986	-681.465	0.58	127.581	-0.4696	-679.349
3335	0.5	Extremo 1A	38.986	-659.668	0.58	127.581	-0.7596	-344.065
3335	1	Extremo 1A	38.986	-637.87	0.58	127.581	-1.0497	-19.6809
3335	0	Extremo 2A	-3.43	-612.268	0.785	63.2692	0.431	-722.928
3335	0.5	Extremo 2A	-3.43	-590.471	0.785	63.2692	0.0387	-422.243
3335	1	Extremo 2A	-3.43	-568.673	0.785	63.2692	-0.3536	-132.457
3336	0	Extremo 1A	40.101	-586.862	0.788	104.047	-0.3743	-7.0612
3336	0.5	Extremo 1A	40.101	-565.064	0.788	104.047	-0.7681	280.92
3336	1	Extremo 1A	40.101	-543.267	0.788	104.047	-1.1619	558.003
3336	0	Extremo 2A	-2.325	-514.483	0.578	41.8943	0.3193	-119.948
3336	0.5	Extremo 2A	-2.325	-492.686	0.578	41.8943	0.0302	131.844
3336	1	Extremo 2A	-2.325	-470.888	0.578	41.8943	-0.2589	372.738
3337	0	Extremo 1A	42.102	-491.077	1.042	86.3502	-0.2537	563.771
3337	0.5	Extremo 1A	42.102	-469.279	1.042	86.3502	-0.7749	803.86
3337	1	Extremo 1A	42.102	-447.482	1.042	86.3502	-1.2961	1033.05
3337	0	Extremo 2A	-1.651	-415.165	0.42	29.0825	0.2327	378.901
3337	0.5	Extremo 2A	-1.651	-393.368	0.42	29.0825	0.0226	581.034
3337	1	Extremo 2A	-1.651	-371.57	0.42	29.0825	-0.1875	772.269
3338	0	Extremo 1A	46.038	-399.076	1.304	66.5929	-0.1141	1034.49
3338	0.5	Extremo 1A	46.038	-377.279	1.304	66.5929	-0.7662	1228.58
3338	1	Extremo 1A	46.038	-355.481	1.304	66.5929	-1.4183	1411.77
3338	0	Extremo 2A	-1.207	-316.758	0.303	19.5421	0.1678	775.492
3338	0.5	Extremo 2A	-1.207	-294.96	0.303	19.5421	0.0164	928.421
3338	1	Extremo 2A	-1.207	-273.163	0.303	19.5421	-0.135	1070.45
3339	0	Extremo 1A	54.404	-327.045	1.441	37.6633	0.0473	1406.83
3339	0.5	Extremo 1A	54.404	-305.247	1.441	37.6633	-0.6734	1564.91
3339	1	Extremo 1A	54.404	-283.45	1.441	37.6633	-1.3941	1712.08
3339	0	Extremo 2A	-0.896	-219.207	0.217	10.8742	0.1201	1072.03
3339	0.5	Extremo 2A	-0.896	-197.409	0.217	10.8742	0.0117	1176.18
3339	1	Extremo 2A	-0.896	-175.612	0.217	10.8742	-0.0968	1269.44
3340	0	Extremo 1A	18.451	-123.754	1.458	-4.1857	0.3636	1707.64
3340	0.5	Extremo 1A	18.451	-101.957	1.458	-4.1857	-0.3652	1764.06
3340	1	Extremo 1A	18.451	-80.159	1.458	-4.1857	-1.094	1809.59
3340	0	Extremo 2A	-0.669	-122.198	0.155	2.2626	0.0856	1269.89
3340	0.5	Extremo 2A	-0.669	-100.4	0.155	2.2626	0.0082	1325.54
3340	1	Extremo 2A	-0.669	-78.603	0.155	2.2626	-0.0692	1370.29
3341	0	Extremo 1A	-17.492	79.475	1.453	-46.2214	0.6695	1814.64
3341	0.5	Extremo 1A	-17.492	101.273	1.453	-46.2214	-0.057	1769.46
3341	1	Extremo 1A	-17.492	123.07	1.453	-46.2214	-0.7836	1713.37
3341	0	Extremo 2A	-0.5	-25.437	0.11	-6.6194	0.0608	1369.68
3341	0.5	Extremo 2A	-0.5	-3.64	0.11	-6.6194	0.0057	1376.95
3341	1	Extremo 2A	-0.5	18.158	0.11	-6.6194	-0.0495	1373.32
3342	0	Extremo 1A	-9.094	151.306	1.329	-75.7981	0.7001	1718.92
3342	0.5	Extremo 1A	-9.094	173.104	1.329	-75.7981	0.0355	1637.82
3342	1	Extremo 1A	-9.094	194.901	1.329	-75.7981	-0.6291	1545.82
3342	0	Extremo 2A	-0.371	71.237	0.079	-16.2074	0.0432	1371.35
3342	0.5	Extremo 2A	-0.371	93.034	0.079	-16.2074	0.0039	1330.28
3342	1	Extremo 2A	-0.371	114.832	0.079	-16.2074	-0.0354	1278.32
3343	0	Extremo 1A	-5.104	242.954	1.084	-96.8908	0.5859	1545.12
3343	0.5	Extremo 1A	-5.104	264.751	1.084	-96.8908	0.0439	1418.19
3343	1	Extremo 1A	-5.104	286.549	1.084	-96.8908	-0.4982	1280.37
3343	0	Extremo 2A	-0.271	167.678	0.056	-27.61	0.0308	1274.26
3343	0.5	Extremo 2A	-0.271	189.476	0.056	-27.61	0.0027	1184.97
3343	1	Extremo 2A	-0.271	211.273	0.056	-27.61	-0.0254	1084.79
3344	0	Extremo 1A	-3.022	337.773	0.853	-116.443	0.4628	1275.52
3344	0.5	Extremo 1A	-3.022	359.571	0.853	-116.443	0.0365	1101.18
3344	1	Extremo 1A	-3.022	381.368	0.853	-116.443	-0.3899	915.95
3344	0	Extremo 2A	-0.191	262.483	0.041	-43.1919	0.0223	1077.01
3344	0.5	Extremo 2A	-0.191	284.281	0.041	-43.1919	0.0019	940.318
3344	1	Extremo 2A	-0.191	306.078	0.041	-43.1919	-0.0185	792.729
3345	0	Extremo 1A	-1.796	422.879	0.681	-138.219	0.3659	902.959
3345	0.5	Extremo 1A	-1.796	444.676	0.681	-138.219	0.0253	686.07
3345	1	Extremo 1A	-1.796	466.474	0.681	-138.219	-0.3153	458.283
3345	0	Extremo 2A	-0.126	345.074	0.031	-64.7285	0.0168	776.725
3345	0.5	Extremo 2A	-0.126	366.872	0.031	-64.7285	0.0013	598.739
3345	1	Extremo 2A	-0.126	388.669	0.031	-64.7285	-0.0142	409.853
3346	0	Extremo 1A	-0.977	417.263	0.576	-143.733	0.2917	424.686
3346	0.5	Extremo 1A	-0.977	439.061	0.576	-143.733	0.0035	210.605
3346	1	Extremo 1A	-0.977	460.858	0.576	-143.733	-0.2847	-14.3745
3346	0	Extremo 2A	-0.073	347.326	0.026	-76.7785	0.0133	375.784
3346	0.5	Extremo 2A	-0.073	369.123	0.026	-76.7785	0.00038	196.672
3346	1	Extremo 2A	-0.073	390.921	0.026	-76.7785	-0.0126	6.6605
3347	0	Extremo 1A	-0.389	-1.506	0.481	-25.0102	0.1957	-15.313
3347	0.5	Extremo 1A	-0.389	20.292	0.481	-25.0102	-0.0447	-20.0094
3347	1	Extremo 1A	-0.389	42.089	0.481	-25.0102	-0.2852	-35.6045
3347	0	Extremo 2A	-0.029	3.552	0.022	9.6756	0.0093	0.4614
3347	0.5	Extremo 2A	-0.029	25.349	0.022	9.6756	-0.0019	-6.7639
3347	1	Extremo 2A	-0.029	47.147	0.022	9.6756	-0.0131	-24.8879
3348	0	Extremo 1A	6.674	-61.176	-6.399	7.964	-4.2571	-17.1829
3348	0.5	Extremo 1A	6.674	-39.378	-6.399	7.964	-1.0578	7.9555
3348	1	Extremo 1A	6.674	-17.581	-6.399	7.964	2.1414	22.1952
3348	0	Extremo 2A	6.674	-61.176	-6.399	7.964	-4.2571	-17.1829
3348	0.5	Extremo 2A	6.674	-39.378	-6.399	7.964	-1.0578	7.9555
3348	1	Extremo 2A	6.674	-17.581	-6.399	7.964	2.1414	22.1952
3349	0	Extremo 1A	13.242	-124.771	-6.533	10.9004	-4.3616	31.1011
3349	0.5	Extremo 1A	13.242	-102.974	-6.533	10.9004	-1.0952	88.0373
3349	1	Extremo 1A	13.242	-81.176	-6.533	10.9004	2.1711	134.075
3349	0	Extremo 2A	13.242	-124.771	-6.533	10.9004	-4.3616	31.1011

3349	0.5	Extremo 2A	13.242	-102.974	-6.533	10.9004	-1.0952	88.0373
3349	1	Extremo 2A	13.242	-81.176	-6.533	10.9004	2.1711	134.075
3350	0	Extremo 1A	18.915	-121.885	-5.41	10.4337	-3.7232	167.722
3350	0.5	Extremo 1A	18.915	-100.087	-5.41	10.4337	-1.018	223.215
3350	1	Extremo 1A	18.915	-78.29	-5.41	10.4337	1.6872	267.809
3350	0	Extremo 2A	18.915	-121.885	-5.41	10.4337	-3.7232	167.722
3350	0.5	Extremo 2A	18.915	-100.087	-5.41	10.4337	-1.018	223.215
3350	1	Extremo 2A	18.915	-78.29	-5.41	10.4337	1.6872	267.809
3351	0	Extremo 1A	22.826	-55.109	-4.124	6.9627	-3.013	289.493
3351	0.5	Extremo 1A	22.826	-33.312	-4.124	6.9627	-0.9511	311.598
3351	1	Extremo 1A	22.826	-11.514	-4.124	6.9627	1.1107	322.804
3351	0	Extremo 2A	22.826	-55.109	-4.124	6.9627	-3.013	289.493
3351	0.5	Extremo 2A	22.826	-33.312	-4.124	6.9627	-0.9511	311.598
3351	1	Extremo 2A	22.826	-11.514	-4.124	6.9627	1.1107	322.805
3352	0	Extremo 1A	25.249	36.002	-3.067	1.764	-2.4382	331.568
3352	0.5	Extremo 1A	25.249	57.8	-3.067	1.764	-0.9049	308.117
3352	1	Extremo 1A	25.249	79.597	-3.067	1.764	0.6285	273.768
3352	0	Extremo 2A	25.249	36.002	-3.067	1.764	-2.4382	331.568
3352	0.5	Extremo 2A	25.249	57.8	-3.067	1.764	-0.9049	308.118
3352	1	Extremo 2A	25.249	79.597	-3.067	1.764	0.6285	273.768
3353	0	Extremo 1A	26.665	133.134	-2.263	-3.7931	-1.9977	274.268
3353	0.5	Extremo 1A	26.665	154.931	-2.263	-3.7931	-0.8661	202.251
3353	1	Extremo 1A	26.665	176.729	-2.263	-3.7931	0.2656	119.336
3353	0	Extremo 2A	26.665	133.134	-2.263	-3.7931	-1.9977	274.268
3353	0.5	Extremo 2A	26.665	154.931	-2.263	-3.7931	-0.8661	202.252
3353	1	Extremo 2A	26.665	176.729	-2.263	-3.7931	0.2656	119.337
3354	0	Extremo 1A	27.454	229.291	-1.665	-8.3192	-1.6657	111.122
3354	0.5	Extremo 1A	27.454	251.088	-1.665	-8.3192	-0.8331	-8.9733
3354	1	Extremo 1A	27.454	272.886	-1.665	-8.3192	-0.00044	-139.967
3354	0	Extremo 2A	27.454	229.291	-1.665	-8.3192	-1.6657	111.122
3354	0.5	Extremo 2A	27.454	251.088	-1.665	-8.3192	-0.8331	-8.973
3354	1	Extremo 2A	27.454	272.886	-1.665	-8.3192	-0.00044	-139.967
3355	0	Extremo 1A	27.871	308.639	-1.224	-10.0362	-1.4184	-165.686
3355	0.5	Extremo 1A	27.871	330.436	-1.224	-10.0362	-0.8065	-325.454
3355	1	Extremo 1A	27.871	352.234	-1.224	-10.0362	-0.1947	-496.122
3355	0	Extremo 2A	27.871	308.639	-1.224	-10.0362	-1.4184	-165.685
3355	0.5	Extremo 2A	27.871	330.436	-1.224	-10.0362	-0.8065	-325.454
3355	1	Extremo 2A	27.871	352.234	-1.224	-10.0362	-0.1947	-496.121
3356	0	Extremo 1A	28.074	313.005	-0.899	-6.7298	-1.2358	-556.519
3356	0.5	Extremo 1A	28.074	334.802	-0.899	-6.7298	-0.7862	-718.471
3356	1	Extremo 1A	28.074	356.6	-0.899	-6.7298	-0.3367	-891.321
3356	0	Extremo 2A	28.074	313.005	-0.899	-6.7298	-1.2358	-556.519
3356	0.5	Extremo 2A	28.074	334.802	-0.899	-6.7298	-0.7862	-718.47
3356	1	Extremo 2A	28.074	356.6	-0.899	-6.7298	-0.3367	-891.321
3357	0	Extremo 1A	28.156	118.852	-0.661	2.7435	-1.1017	-981.938
3357	0.5	Extremo 1A	28.156	140.649	-0.661	2.7435	-0.7711	-1046.81
3357	1	Extremo 1A	28.156	162.447	-0.661	2.7435	-0.4405	-1122.59
3357	0	Extremo 2A	28.156	118.852	-0.661	2.7435	-1.1017	-981.937
3357	0.5	Extremo 2A	28.156	140.649	-0.661	2.7435	-0.7711	-1046.81
3357	1	Extremo 2A	28.156	162.447	-0.661	2.7435	-0.4405	-1122.59
3358	0	Extremo 1A	28.173	-268.094	-0.487	15.2437	-1.0032	-1122.29
3358	0.5	Extremo 1A	28.173	-246.297	-0.487	15.2437	-0.7599	-993.693
3358	1	Extremo 1A	28.173	-224.499	-0.487	15.2437	-0.5167	-875.994
3358	0	Extremo 2A	28.173	-268.094	-0.487	15.2437	-1.0032	-1122.29
3358	0.5	Extremo 2A	28.173	-246.297	-0.487	15.2437	-0.7599	-993.693
3358	1	Extremo 2A	28.173	-224.499	-0.487	15.2437	-0.5167	-875.994
3359	0	Extremo 1A	28.158	-462.242	-0.358	24.6626	-0.931	-784.727
3359	0.5	Extremo 1A	28.158	-440.444	-0.358	24.6626	-0.7518	-559.056
3359	1	Extremo 1A	28.158	-418.647	-0.358	24.6626	-0.5726	-344.283
3359	0	Extremo 2A	28.158	-462.242	-0.358	24.6626	-0.931	-784.727
3359	0.5	Extremo 2A	28.158	-440.444	-0.358	24.6626	-0.7518	-559.055
3359	1	Extremo 2A	28.158	-418.647	-0.358	24.6626	-0.5726	-344.283
3360	0	Extremo 1A	28.127	-457.889	-0.264	27.8347	-0.878	-283.035
3360	0.5	Extremo 1A	28.127	-436.092	-0.264	27.8347	-0.7458	-59.54
3360	1	Extremo 1A	28.127	-414.294	-0.264	27.8347	-0.6137	153.056
3360	0	Extremo 2A	28.127	-457.889	-0.264	27.8347	-0.878	-283.035
3360	0.5	Extremo 2A	28.127	-436.091	-0.264	27.8347	-0.7458	-59.5399
3360	1	Extremo 2A	28.127	-414.294	-0.264	27.8347	-0.6137	153.057
3361	0	Extremo 1A	28.092	-378.634	-0.195	25.8409	-0.839	180.064
3361	0.5	Extremo 1A	28.092	-356.837	-0.195	25.8409	-0.7415	363.932
3361	1	Extremo 1A	28.092	-335.039	-0.195	25.8409	-0.6439	536.901
3361	0	Extremo 2A	28.092	-378.634	-0.195	25.8409	-0.839	180.064
3361	0.5	Extremo 2A	28.092	-356.837	-0.195	25.8409	-0.7415	363.932
3361	1	Extremo 2A	28.092	-335.039	-0.195	25.8409	-0.6439	536.901
3362	0	Extremo 1A	28.057	-282.665	-0.144	20.7609	-0.8104	547.377
3362	0.5	Extremo 1A	28.057	-260.867	-0.144	20.7609	-0.7383	683.26
3362	1	Extremo 1A	28.057	-239.07	-0.144	20.7609	-0.6662	808.244
3362	0	Extremo 2A	28.057	-282.665	-0.144	20.7609	-0.8104	547.377
3362	0.5	Extremo 2A	28.057	-260.867	-0.144	20.7609	-0.7383	683.26
3362	1	Extremo 2A	28.057	-239.07	-0.144	20.7609	-0.6662	808.244
3363	0	Extremo 1A	28.025	-185.079	-0.107	14.0922	-0.7893	812.361
3363	0.5	Extremo 1A	28.025	-163.282	-0.107	14.0922	-0.736	899.452
3363	1	Extremo 1A	28.025	-141.484	-0.107	14.0922	-0.6827	975.643
3363	0	Extremo 2A	28.025	-185.079	-0.107	14.0922	-0.7893	812.361
3363	0.5	Extremo 2A	28.025	-163.282	-0.107	14.0922	-0.736	899.451
3363	1	Extremo 2A	28.025	-141.484	-0.107	14.0922	-0.6827	975.643
3364	0	Extremo 1A	27.996	-88.039	-0.079	6.6729	-0.7737	977.265
3364	0.5	Extremo 1A	27.996	-66.241	-0.079	6.6729	-0.7342	1015.84
3364	1	Extremo 1A	27.996	-44.444	-0.079	6.6729	-0.6948	1043.51
3364	0	Extremo 2A	27.996	-88.039	-0.079	6.6729	-0.7737	977.265
3364	0.5	Extremo 2A	27.996	-66.241	-0.079	6.6729	-0.7342	1015.84
3364	1	Extremo 2A	27.996	-44.444	-0.079	6.6729	-0.6948	1043.51
3365	0	Extremo 1A	27.972	8.652	-0.058	-1.031	-0.7622	1043.87
3365	0.5	Extremo 1A	27.972	30.45	-0.058	-1.031	-0.733	1034.09
3365	1	Extremo 1A	27.972	52.247	-0.058	-1.031	-0.7038	1013.42
3365	0	Extremo 2A	27.972	8.653	-0.058	-1.031	-0.7622	1043.87
3365	0.5	Extremo 2A	27.972	30.45	-0.058	-1.031	-0.733	1034.09
3365	1	Extremo 2A	27.972	52.248	-0.058	-1.031	-0.7038	1013.41
3366	0	Extremo 1A	27.952	105.374	-0.043	-8.6957	-0.7537	1012.76
3366	0.5	Extremo 1A	27.952	127.171	-0.043	-8.6957	-0.7321	954.626
3366	1	Extremo 1A	27.952	148.969	-0.043	-8.6957	-0.7104	885.591
3366	0	Extremo 2A	27.952	105.374	-0.043	-8.6957	-0.7537	1012.76
3366	0.5	Extremo 2A	27.952	127.171	-0.043	-8.6957	-0.7321	954.625
3366	1	Extremo 2A	27.952	148.969	-0.043	-8.6957	-0.7104	885.59
3367	0	Extremo 1A	27.935	202.524	-0.032	-15.9795	-0.7474	883.569
3367	0.5	Extremo 1A	27.935	224.321	-0.032	-15.9795	-0.7314	776.857
3367	1	Extremo 1A	27.935	246.119	-0.032	-15.9795	-0.7154	659.247
3367	0	Extremo 2A	27.935	202.524	-0.032	-15.9795	-0.7474	883.568
3367	0.5	Extremo 2A	27.935	224.322	-0.032	-15.9795	-0.7314	776.856
3367	1	Extremo 2A	27.935	246.119	-0.032	-15.9795	-0.7154	659.246
3368	0	Extremo 1A	27.921	300.316	-0.024	-22.3529	-0.7428	654.396
3368	0.5	Extremo 1A	27.921	322.113	-0.024	-22.3529	-0.7309	498.789
3368	1	Extremo 1A	27.921	343.911	-0.024	-22.3529	-0.719	332.283
3368	0	Extremo 2A	27.921	300.316	-0.024	-22.3529	-0.7428	654.395
3368	0.5	Extremo 2A	27.921	322.114	-0.024	-22.3529	-0.7309	498.788
3368	1	Extremo 2A	27.921	343.911	-0.024	-22.3529	-0.719	332.282
3369	0	Extremo 1A	27.91	396.238	-0.018	-26.8335	-0.7393	320.107
3369	0.5	Extremo 1A	27.91	418.035	-0.018	-26.8335	-0.7305	116.538
3369	1	Extremo 1A	27.91	439.833	-0.018	-26.8335	-0.7217	-97.9287
3369	0	Extremo 2A	27.91	396.238	-0.018	-26.8335	-0.7393	320.105
3369	0.5	Extremo 2A	27.91	418.035	-0.018	-26.8335	-0.7305	116.537
3369	1	Extremo 2A	27.91	439.833	-0.018	-26.8335	-0.7217	-97.93
3370	0	Extremo 1A	27.901	472.766	-0.013	-27.639	-0.7368	-129.236
3370	0.5	Extremo 1A	27.901	494.564	-0.013	-27.639	-0.7302	-371.068
3370	1	Extremo 1A	27.901	516.361	-0.013	-27.639	-0.7237	-623.8
3370	0	Extremo 2A	27.901	472.766	-0.013	-27.639	-0.7368	-129.237
3370	0.5	Extremo 2A	27.901	494.564	-0.013	-27.639	-0.7302	-371.07
3370	1	Extremo 2A	27.901	516.361	-0.013	-27.639	-0.7237	-623.801
3371	0	Extremo 1A	27.893	462.376	-0.00969	-22.2335	-0.7349	-694.777
3371	0.5	Extremo 1A	27.893	484.173	-0.00969	-22.2335	-0.73	-931.414
3371	1	Extremo 1A	27.893	505.971	-0.00969	-22.2335	-0.7252	-1178.95
3371	0	Extremo 2A	27.893	462.376	-0.00969	-22.2335	-0.7349	-694.778
3371	0.5	Extremo 2A	27.893	484.173	-0.00969	-22.2335	-0.73	-931.416
3371	1	Extremo 2A	27.893	505.971	-0.00969	-22.2335	-0.7252	-1178.95
3372	0	Extremo 1A	27.888	221.644	-0.00719	-9.1194	-0.7335	-1284.67
3372	0.5	Extremo 1A	27.888	243.441	-0.00719	-9.1194	-0.7299	-1400.94
3372	1	Extremo 1A	27.888	265.239	-0.00719	-9.1194	-0.7263	-1528.11
3372	0	Extremo 2A	27.888	221.644	-0.00719	-9.1194	-0.7335	-1284.67
3372	0.5	Extremo 2A	27.888	243.441	-0.00719	-9.1194	-0.7299	-1400.94
3372	1	Extremo 2A	27.888	265.239	-0.00719	-9.1194	-0.7263	-1528.11
3373	0	Extremo 1A	27.883	-242.808	-0.00533	8.127	-0.7324	-1528.12
3373	0.5	Extremo 1A	27.883	-221.011	-0.00533	8.127	-0.7298	-1412.17
3373	1	Extremo 1A	27.883	-199.213	-0.00533	8.127	-0.7271	-1307.11
3373	0	Extremo 2A	27.883	-242.808	-0.00533	8.127	-0.7324	-1528.12

3373	0.5	Extremo 2A	27.883	-221.011	-0.00533	8.127	-0.7298	-1412.17
3373	1	Extremo 2A	27.883	-199.213	-0.00533	8.127	-0.7271	-1307.11
3374	0	Extremo 1A	27.879	-483.54	-0.00396	21.2416	-0.7317	-1201.42
3374	0.5	Extremo 1A	27.879	-461.743	-0.00396	21.2416	-0.7297	-965.096
3374	1	Extremo 1A	27.879	-439.945	-0.00396	21.2416	-0.7277	-739.674
3374	0	Extremo 2A	27.879	-483.541	-0.00396	21.2416	-0.7317	-1201.42
3374	0.5	Extremo 2A	27.879	-461.743	-0.00396	21.2416	-0.7297	-965.097
3374	1	Extremo 2A	27.879	-439.946	-0.00396	21.2416	-0.7277	-739.674
3375	0	Extremo 1A	27.876	-493.931	-0.00294	26.648	-0.7311	-668.722
3375	0.5	Extremo 1A	27.876	-472.134	-0.00294	26.648	-0.7296	-427.206
3375	1	Extremo 1A	27.876	-450.336	-0.00294	26.648	-0.7282	-196.588
3375	0	Extremo 2A	27.876	-493.932	-0.00294	26.648	-0.7311	-668.723
3375	0.5	Extremo 2A	27.876	-472.134	-0.00294	26.648	-0.7296	-427.206
3375	1	Extremo 2A	27.876	-450.337	-0.00294	26.648	-0.7282	-196.588
3376	0	Extremo 1A	27.874	-417.404	-0.00218	25.8445	-0.7307	-165.31
3376	0.5	Extremo 1A	27.874	-395.607	-0.00218	25.8445	-0.7296	37.9432
3376	1	Extremo 1A	27.874	-373.809	-0.00218	25.8445	-0.7285	230.297
3376	0	Extremo 2A	27.874	-417.405	-0.00218	25.8445	-0.7307	-165.31
3376	0.5	Extremo 2A	27.874	-395.607	-0.00218	25.8445	-0.7296	37.9434
3376	1	Extremo 2A	27.874	-373.81	-0.00218	25.8445	-0.7285	230.298
3377	0	Extremo 1A	27.872	-321.484	-0.00162	21.3682	-0.7304	242.439
3377	0.5	Extremo 1A	27.872	-299.687	-0.00162	21.3682	-0.7295	397.732
3377	1	Extremo 1A	27.872	-277.889	-0.00162	21.3682	-0.7287	542.126
3377	0	Extremo 2A	27.872	-321.485	-0.00162	21.3682	-0.7304	242.439
3377	0.5	Extremo 2A	27.872	-299.687	-0.00162	21.3682	-0.7295	397.732
3377	1	Extremo 2A	27.872	-277.89	-0.00162	21.3682	-0.7287	542.127
3378	0	Extremo 1A	27.871	-223.693	-0.0012	15.0036	-0.7301	546.933
3378	0.5	Extremo 1A	27.871	-201.896	-0.0012	15.0036	-0.7295	653.33
3378	1	Extremo 1A	27.871	-180.098	-0.0012	15.0036	-0.7289	748.829
3378	0	Extremo 2A	27.871	-223.694	-0.0012	15.0036	-0.7301	546.934
3378	0.5	Extremo 2A	27.871	-201.896	-0.0012	15.0036	-0.7295	653.331
3378	1	Extremo 2A	27.871	-180.099	-0.0012	15.0036	-0.7289	748.83
3379	0	Extremo 1A	27.869	-126.542	-0.00089	7.7374	-0.7299	750.792
3379	0.5	Extremo 1A	27.869	-104.745	-0.00089	7.7374	-0.7295	808.614
3379	1	Extremo 1A	27.869	-82.947	-0.00089	7.7374	-0.7291	855.537
3379	0	Extremo 2A	27.869	-126.543	-0.00089	7.7374	-0.7299	750.793
3379	0.5	Extremo 2A	27.869	-104.745	-0.00089	7.7374	-0.7295	808.615
3379	1	Extremo 2A	27.869	-82.948	-0.00089	7.7374	-0.7291	855.539
3380	0	Extremo 1A	27.868	-29.812	-0.00066	0.1078	-0.7298	856.104
3380	0.5	Extremo 1A	27.868	-8.014	-0.00066	0.1078	-0.7295	865.56
3380	1	Extremo 1A	27.868	13.783	-0.00066	0.1078	-0.7292	864.118
3380	0	Extremo 2A	27.868	-29.812	-0.00066	0.1078	-0.7298	856.106
3380	0.5	Extremo 2A	27.868	-8.015	-0.00066	0.1078	-0.7295	865.563
3380	1	Extremo 2A	27.868	13.783	-0.00066	0.1078	-0.7292	864.121
3381	0	Extremo 1A	27.868	66.913	-0.00049	-7.5273	-0.7297	863.624
3381	0.5	Extremo 1A	27.868	88.711	-0.00049	-7.5273	-0.7295	824.718
3381	1	Extremo 1A	27.868	110.508	-0.00049	-7.5273	-0.7292	774.913
3381	0	Extremo 2A	27.868	66.912	-0.00049	-7.5273	-0.7297	863.626
3381	0.5	Extremo 2A	27.868	88.71	-0.00049	-7.5273	-0.7295	824.721
3381	1	Extremo 2A	27.868	110.507	-0.00049	-7.5273	-0.7292	774.916
3382	0	Extremo 1A	27.867	164.041	-0.00037	-14.8124	-0.7297	773.048
3382	0.5	Extremo 1A	27.867	185.839	-0.00037	-14.8124	-0.7295	685.578
3382	1	Extremo 1A	27.867	207.636	-0.00037	-14.8124	-0.7293	587.209
3382	0	Extremo 2A	27.867	164.041	-0.00037	-14.8124	-0.7297	773.051
3382	0.5	Extremo 2A	27.867	185.838	-0.00037	-14.8124	-0.7295	685.581
3382	1	Extremo 2A	27.867	207.636	-0.00037	-14.8124	-0.7293	587.213
3383	0	Extremo 1A	27.867	261.789	-0.00027	-21.2178	-0.7296	582.579
3383	0.5	Extremo 1A	27.867	283.586	-0.00027	-21.2178	-0.7295	446.235
3383	1	Extremo 1A	27.867	305.384	-0.00027	-21.2178	-0.7293	298.992
3383	0	Extremo 2A	27.867	261.788	-0.00027	-21.2178	-0.7296	582.583
3383	0.5	Extremo 2A	27.867	283.586	-0.00027	-21.2178	-0.7295	446.239
3383	1	Extremo 2A	27.867	305.383	-0.00027	-21.2178	-0.7293	298.997
3384	0	Extremo 1A	27.866	357.728	-0.0002	-25.7743	-0.7296	287.256
3384	0.5	Extremo 1A	27.866	379.525	-0.0002	-25.7743	-0.7295	102.943
3384	1	Extremo 1A	27.866	401.323	-0.0002	-25.7743	-0.7294	-92.2691
3384	0	Extremo 2A	27.866	357.727	-0.0002	-25.7743	-0.7296	287.261
3384	0.5	Extremo 2A	27.866	379.525	-0.0002	-25.7743	-0.7295	102.948
3384	1	Extremo 2A	27.866	401.322	-0.0002	-25.7743	-0.7294	-92.264
3385	0	Extremo 1A	27.866	434.908	-0.00015	-26.7233	-0.7295	-122.526
3385	0.5	Extremo 1A	27.866	456.705	-0.00015	-26.7233	-0.7295	-345.43
3385	1	Extremo 1A	27.866	478.503	-0.00015	-26.7233	-0.7294	-579.232
3385	0	Extremo 2A	27.866	434.907	-0.00015	-26.7233	-0.7295	-122.521
3385	0.5	Extremo 2A	27.866	456.705	-0.00015	-26.7233	-0.7295	-345.424
3385	1	Extremo 2A	27.866	478.502	-0.00015	-26.7233	-0.7294	-579.226
3386	0	Extremo 1A	27.866	428.01	-0.00011	-21.5315	-0.7295	-647.872
3386	0.5	Extremo 1A	27.866	449.807	-0.00011	-21.5315	-0.7295	-867.327
3386	1	Extremo 1A	27.866	471.605	-0.00011	-21.5315	-0.7294	-1097.68
3386	0	Extremo 2A	27.866	428.01	-0.00011	-21.5315	-0.7295	-647.867
3386	0.5	Extremo 2A	27.866	449.807	-0.00011	-21.5315	-0.7295	-867.321
3386	1	Extremo 2A	27.866	471.605	-0.00011	-21.5315	-0.7294	-1097.67
3387	0	Extremo 1A	27.866	198.303	-8.3E-05	-8.5957	-0.7295	-1199.93
3387	0.5	Extremo 1A	27.866	220.1	-8.3E-05	-8.5957	-0.7295	-1304.53
3387	1	Extremo 1A	27.866	241.898	-8.3E-05	-8.5957	-0.7294	-1420.03
3387	0	Extremo 2A	27.866	198.303	-8.3E-05	-8.5957	-0.7295	-1199.92
3387	0.5	Extremo 2A	27.866	220.1	-8.3E-05	-8.5957	-0.7295	-1304.52
3387	1	Extremo 2A	27.866	241.898	-8.3E-05	-8.5957	-0.7294	-1420.02
3388	0	Extremo 1A	27.865	-247.805	-6.2E-05	8.6914	-0.7295	-1420.03
3388	0.5	Extremo 1A	27.865	-226.008	-6.2E-05	8.6914	-0.7294	-1301.57
3388	1	Extremo 1A	27.865	-204.21	-6.2E-05	8.6914	-0.7294	-1194.02
3388	0	Extremo 2A	27.865	-247.804	-6.2E-05	8.6914	-0.7295	-1420.02
3388	0.5	Extremo 2A	27.865	-226.007	-6.2E-05	8.6914	-0.7294	-1301.57
3388	1	Extremo 2A	27.865	-204.209	-6.2E-05	8.6914	-0.7294	-1194.01
3389	0	Extremo 1A	27.865	-477.512	-4.6E-05	21.6272	-0.7295	-1091.76
3389	0.5	Extremo 1A	27.865	-455.715	-4.6E-05	21.6272	-0.7294	-858.456
3389	1	Extremo 1A	27.865	-433.917	-4.6E-05	21.6272	-0.7294	-636.048
3389	0	Extremo 2A	27.865	-477.511	-4.6E-05	21.6272	-0.7295	-1091.76
3389	0.5	Extremo 2A	27.865	-455.713	-4.6E-05	21.6272	-0.7294	-858.453
3389	1	Extremo 2A	27.865	-433.916	-4.6E-05	21.6272	-0.7294	-636.045
3390	0	Extremo 1A	27.865	-484.41	-3.4E-05	26.8188	-0.7295	-567.401
3390	0.5	Extremo 1A	27.865	-462.613	-3.4E-05	26.8188	-0.7294	-330.645
3390	1	Extremo 1A	27.865	-440.815	-3.4E-05	26.8188	-0.7294	-104.788
3390	0	Extremo 2A	27.865	-484.408	-3.4E-05	26.8188	-0.7295	-567.398
3390	0.5	Extremo 2A	27.865	-462.611	-3.4E-05	26.8188	-0.7294	-330.643
3390	1	Extremo 2A	27.865	-440.813	-3.4E-05	26.8188	-0.7294	-104.788
3391	0	Extremo 1A	27.865	-407.23	-2.6E-05	25.8696	-0.7295	-74.5232
3391	0.5	Extremo 1A	27.865	-385.432	-2.6E-05	25.8696	-0.7294	123.642
3391	1	Extremo 1A	27.865	-363.635	-2.6E-05	25.8696	-0.7294	310.909
3391	0	Extremo 2A	27.865	-407.228	-2.6E-05	25.8696	-0.7295	-74.5229
3391	0.5	Extremo 2A	27.865	-385.43	-2.6E-05	25.8696	-0.7294	123.642
3391	1	Extremo 2A	27.865	-363.633	-2.6E-05	25.8696	-0.7294	310.907
3392	0	Extremo 1A	27.865	-311.29	-1.9E-05	21.3125	-0.7295	322.654
3392	0.5	Extremo 1A	27.865	-289.493	-1.9E-05	21.3125	-0.7294	472.85
3392	1	Extremo 1A	27.865	-267.695	-1.9E-05	21.3125	-0.7294	612.147
3392	0	Extremo 2A	27.865	-311.288	-1.9E-05	21.3124	-0.7295	322.652
3392	0.5	Extremo 2A	27.865	-289.491	-1.9E-05	21.3124	-0.7294	472.847
3392	1	Extremo 2A	27.865	-267.693	-1.9E-05	21.3124	-0.7294	612.143
3393	0	Extremo 1A	27.865	-213.542	-1.4E-05	14.9058	-0.7295	616.788
3393	0.5	Extremo 1A	27.865	-191.745	-1.4E-05	14.9058	-0.7294	718.11
3393	1	Extremo 1A	27.865	-169.947	-1.4E-05	14.9058	-0.7294	808.533
3393	0	Extremo 2A	27.865	-213.54	-1.4E-05	14.9058	-0.7295	616.784
3393	0.5	Extremo 2A	27.865	-191.742	-1.4E-05	14.9058	-0.7294	718.105
3393	1	Extremo 2A	27.865	-169.945	-1.4E-05	14.9058	-0.7294	808.526
3394	0	Extremo 1A	27.865	-116.413	-1.1E-05	7.6184	-0.7295	810.413
3394	0.5	Extremo 1A	27.865	-94.616	-1.1E-05	7.6184	-0.7294	863.17
3394	1	Extremo 1A	27.865	-72.818	-1.1E-05	7.6184	-0.7294	905.028
3394	0	Extremo 2A	27.865	-116.411	-1.1E-05	7.6183	-0.7295	810.406
3394	0.5	Extremo 2A	27.865	-94.614	-1.1E-05	7.6183	-0.7294	863.163
3394	1	Extremo 2A	27.865	-72.816	-1.1E-05	7.6183	-0.7294	905.02
3395	0	Extremo 1A	27.865	-19.69	-7.9E-06	-0.0214	-0.7294	905.544
3395	0.5	Extremo 1A	27.865	2.108	-7.9E-06	-0.0214	-0.7294	909.94
3395	1	Extremo 1A	27.865	23.905	-7.9E-06	-0.0214	-0.7294	903.436
3395	0	Extremo 2A	27.865	-19.688	-7.9E-06	-0.0215	-0.7294	905.536
3395	0.5	Extremo 2A	27.865	2.11	-7.9E-06	-0.0215	-0.7294	909.93
3395	1	Extremo 2A	27.865	23.907	-7.9E-06	-0.0215	-0.7294	903.426
3396	0	Extremo 1A	27.865	77.035	-5.9E-06	-7.66	-0.7294	902.902
3396	0.5	Extremo 1A	27.865	98.833	-5.9E-06	-7.66	-0.7294	858.935
3396	1	Extremo 1A	27.865	120.63	-5.9E-06	-7.66	-0.7294	804.069
3396	0	Extremo 2A	27.865	77.037	-5.9E-06	-7.66	-0.7294	902.891
3396	0.5	Extremo 2A	27.865	98.835	-5.9E-06	-7.66	-0.7294	858.923
3396	1	Extremo 2A	27.865	120.632	-5.9E-06	-7.66	-0.7294	804.056
3397	0	Extremo 1A	27.865	174.17	-4.4E-06	-14.9431	-0.7294	802.163
3397	0.5	Extremo 1A	27.865	195.967	-4.4E-06	-14.9431	-0.7294	709.629
3397	1	Extremo 1A	27.865	217.765	-4.4E-06	-14.9431	-0.7294	606.196
3397	0	Extremo 2A	27.865	174.172	-4.4E-06	-14.9431	-0.7294	802.151

3397	0.5	Extremo 2A	27.865	195.97	-4.4E-06	-14.9431	-0.7294	709.615
3397	1	Extremo 2A	27.865	217.767	-4.4E-06	-14.9431	-0.7294	606.181
3398	0	Extremo 1A	27.865	271.929	-3.3E-06	-21.3405	-0.7294	601.508
3398	0.5	Extremo 1A	27.865	293.727	-3.3E-06	-21.3405	-0.7294	460.094
3398	1	Extremo 1A	27.865	315.524	-3.3E-06	-21.3405	-0.7294	307.782
3398	0	Extremo 2A	27.865	271.931	-3.3E-06	-21.3405	-0.7294	601.493
3398	0.5	Extremo 2A	27.865	293.729	-3.3E-06	-21.3405	-0.7294	460.078
3398	1	Extremo 2A	27.865	315.526	-3.3E-06	-21.3405	-0.7294	307.764
3399	0	Extremo 1A	27.865	367.864	-2.4E-06	-25.8796	-0.7294	295.93
3399	0.5	Extremo 1A	27.865	389.661	-2.4E-06	-25.8796	-0.7294	106.549
3399	1	Extremo 1A	27.865	411.459	-2.4E-06	-25.8796	-0.7294	-93.7307
3399	0	Extremo 2A	27.865	367.866	-2.4E-06	-25.8796	-0.7294	295.913
3399	0.5	Extremo 2A	27.865	389.663	-2.4E-06	-25.8796	-0.7294	106.531
3399	1	Extremo 2A	27.865	411.461	-2.4E-06	-25.8796	-0.7294	-93.75
3400	0	Extremo 1A	27.865	444.872	-1.8E-06	-26.7975	-0.7294	-124.263
3400	0.5	Extremo 1A	27.865	466.669	-1.8E-06	-26.7975	-0.7294	-352.149
3400	1	Extremo 1A	27.865	488.467	-1.8E-06	-26.7975	-0.7294	-590.933
3400	0	Extremo 2A	27.865	444.874	-1.8E-06	-26.7975	-0.7294	-124.283
3400	0.5	Extremo 2A	27.865	466.672	-1.8E-06	-26.7975	-0.7294	-352.169
3400	1	Extremo 2A	27.865	488.469	-1.8E-06	-26.7975	-0.7294	-590.954
3401	0	Extremo 1A	27.865	437.056	-1.4E-06	-21.5653	-0.7294	-660.187
3401	0.5	Extremo 1A	27.865	458.853	-1.4E-06	-21.5653	-0.7294	-884.164
3401	1	Extremo 1A	27.865	480.651	-1.4E-06	-21.5653	-0.7294	-1119.04
3401	0	Extremo 2A	27.865	437.057	-1.4E-06	-21.5653	-0.7294	-660.209
3401	0.5	Extremo 2A	27.865	458.855	-1.4E-06	-21.5653	-0.7294	-884.187
3401	1	Extremo 2A	27.865	480.652	-1.4E-06	-21.5653	-0.7294	-1119.06
3402	0	Extremo 1A	27.865	204.45	-1E-06	-8.6178	-0.7294	-1222.2
3402	0.5	Extremo 1A	27.865	226.248	-1E-06	-8.6178	-0.7294	-1329.88
3402	1	Extremo 1A	27.865	248.045	-1E-06	-8.6178	-0.7294	-1448.45
3402	0	Extremo 2A	27.865	204.449	-1E-06	-8.6178	-0.7294	-1222.23
3402	0.5	Extremo 2A	27.865	226.247	-1E-06	-8.6178	-0.7294	-1329.9
3402	1	Extremo 2A	27.865	248.044	-1E-06	-8.6178	-0.7294	-1448.47
3403	0	Extremo 1A	27.865	-246.481	-7.5E-07	8.5995	-0.7294	-1448.45
3403	0.5	Extremo 1A	27.865	-224.683	-7.5E-07	8.5995	-0.7294	-1330.66
3403	1	Extremo 1A	27.865	-202.886	-7.5E-07	8.5995	-0.7294	-1223.77
3403	0	Extremo 2A	27.865	-246.486	-7.5E-07	8.5995	-0.7294	-1448.47
3403	0.5	Extremo 2A	27.865	-224.688	-7.5E-07	8.5995	-0.7294	-1330.68
3403	1	Extremo 2A	27.865	-202.891	-7.5E-07	8.5995	-0.7294	-1223.78
3404	0	Extremo 1A	27.865	-479.087	-5.6E-07	21.5471	-0.7294	-1120.61
3404	0.5	Extremo 1A	27.865	-457.289	-5.6E-07	21.5471	-0.7294	-886.513
3404	1	Extremo 1A	27.865	-435.492	-5.6E-07	21.5471	-0.7294	-663.318
3404	0	Extremo 2A	27.865	-479.094	-5.6E-07	21.5471	-0.7294	-1120.62
3404	0.5	Extremo 2A	27.865	-457.296	-5.6E-07	21.5471	-0.7294	-886.527
3404	1	Extremo 2A	27.865	-435.499	-5.6E-07	21.5471	-0.7294	-663.328
3405	0	Extremo 1A	27.865	-486.903	-4.2E-07	26.7793	-0.7294	-594.066
3405	0.5	Extremo 1A	27.865	-465.105	-4.2E-07	26.7793	-0.7294	-356.064
3405	1	Extremo 1A	27.865	-443.308	-4.2E-07	26.7793	-0.7294	-128.96
3405	0	Extremo 2A	27.865	-486.911	-4.2E-07	26.7793	-0.7294	-594.075
3405	0.5	Extremo 2A	27.865	-465.113	-4.2E-07	26.7793	-0.7294	-356.069
3405	1	Extremo 2A	27.865	-443.316	-4.2E-07	26.7793	-0.7294	-128.962
3406	0	Extremo 1A	27.865	-409.894	-3.1E-07	25.8614	-0.7294	-98.4298
3406	0.5	Extremo 1A	27.865	-388.097	-3.1E-07	25.8614	-0.7294	101.068
3406	1	Extremo 1A	27.865	-366.299	-3.1E-07	25.8614	-0.7294	289.667
3406	0	Extremo 2A	27.865	-409.903	-3.1E-07	25.8615	-0.7294	-98.431
3406	0.5	Extremo 2A	27.865	-388.105	-3.1E-07	25.8615	-0.7294	101.071
3406	1	Extremo 2A	27.865	-366.308	-3.1E-07	25.8615	-0.7294	289.674
3407	0	Extremo 1A	27.865	-313.96	-2.3E-07	21.3224	-0.7294	301.516
3407	0.5	Extremo 1A	27.865	-292.163	-2.3E-07	21.3224	-0.7294	453.047
3407	1	Extremo 1A	27.865	-270.365	-2.3E-07	21.3224	-0.7294	593.679
3407	0	Extremo 2A	27.865	-313.968	-2.3E-07	21.3225	-0.7294	301.523
3407	0.5	Extremo 2A	27.865	-292.171	-2.3E-07	21.3225	-0.7294	453.058
3407	1	Extremo 2A	27.865	-270.373	-2.3E-07	21.3225	-0.7294	593.694
3408	0	Extremo 1A	27.865	-216.201	-1.7E-07	14.9253	-0.7294	598.363
3408	0.5	Extremo 1A	27.865	-194.404	-1.7E-07	14.9253	-0.7294	701.015
3408	1	Extremo 1A	27.865	-172.606	-1.7E-07	14.9253	-0.7294	792.767
3408	0	Extremo 2A	27.865	-216.209	-1.7E-07	14.9254	-0.7294	598.379
3408	0.5	Extremo 2A	27.865	-194.412	-1.7E-07	14.9254	-0.7294	701.034
3408	1	Extremo 2A	27.865	-172.614	-1.7E-07	14.9254	-0.7294	792.79
3409	0	Extremo 1A	27.865	-119.067	-1.3E-07	7.6427	-0.7294	794.669
3409	0.5	Extremo 1A	27.865	-97.269	-1.3E-07	7.6427	-0.7294	848.753
3409	1	Extremo 1A	27.865	-75.472	-1.3E-07	7.6427	-0.7294	891.938
3409	0	Extremo 2A	27.865	-119.075	-1.3E-07	7.6428	-0.7294	794.692
3409	0.5	Extremo 2A	27.865	-97.277	-1.3E-07	7.6428	-0.7294	848.78
3409	1	Extremo 2A	27.865	-75.48	-1.3E-07	7.6428	-0.7294	891.97
3410	0	Extremo 1A	27.865	-22.341	-9.7E-08	0.0052	-0.7294	892.467
3410	0.5	Extremo 1A	27.865	-0.544	-9.7E-08	0.0052	-0.7294	898.188
3410	1	Extremo 1A	27.865	21.254	-9.7E-08	0.0052	-0.7294	893.011
3410	0	Extremo 2A	27.865	-22.349	-9.7E-08	0.0053	-0.7294	892.499
3410	0.5	Extremo 2A	27.865	-0.552	-9.7E-08	0.0053	-0.7294	898.224
3410	1	Extremo 2A	27.865	21.246	-9.7E-08	0.0053	-0.7294	893.051
3411	0	Extremo 1A	27.865	74.384	-7.3E-08	-7.6326	-0.7294	892.487
3411	0.5	Extremo 1A	27.865	96.181	-7.3E-08	-7.6326	-0.7294	849.845
3411	1	Extremo 1A	27.865	117.979	-7.3E-08	-7.6326	-0.7294	796.305
3411	0	Extremo 2A	27.865	74.375	-7.3E-08	-7.6325	-0.7294	892.527
3411	0.5	Extremo 2A	27.865	96.173	-7.3E-08	-7.6325	-0.7294	849.889
3411	1	Extremo 2A	27.865	117.97	-7.3E-08	-7.6325	-0.7294	796.354
3412	0	Extremo 1A	27.865	171.517	-5.4E-08	-14.9162	-0.7294	794.41
3412	0.5	Extremo 1A	27.865	193.314	-5.4E-08	-14.9162	-0.7294	703.203
3412	1	Extremo 1A	27.865	215.112	-5.4E-08	-14.9162	-0.7294	601.096
3412	0	Extremo 2A	27.865	171.508	-5.4E-08	-14.9162	-0.7294	794.459
3412	0.5	Extremo 2A	27.865	193.306	-5.4E-08	-14.9162	-0.7294	703.255
3412	1	Extremo 2A	27.865	215.103	-5.4E-08	-14.9162	-0.7294	601.153
3413	0	Extremo 1A	27.865	269.273	-4E-08	-21.3157	-0.7294	596.424
3413	0.5	Extremo 1A	27.865	291.07	-4E-08	-21.3157	-0.7294	456.338
3413	1	Extremo 1A	27.865	312.868	-4E-08	-21.3157	-0.7294	305.353
3413	0	Extremo 2A	27.865	269.265	-4E-08	-21.3156	-0.7294	596.48
3413	0.5	Extremo 2A	27.865	291.062	-4E-08	-21.3156	-0.7294	456.398
3413	1	Extremo 2A	27.865	312.86	-4E-08	-21.3156	-0.7294	305.418
3414	0	Extremo 1A	27.865	365.208	-3E-08	-25.8592	-0.7294	293.532
3414	0.5	Extremo 1A	27.865	387.006	-3E-08	-25.8592	-0.7294	105.478
3414	1	Extremo 1A	27.865	408.803	-3E-08	-25.8592	-0.7294	-93.4742
3414	0	Extremo 2A	27.865	365.2	-3E-08	-25.8592	-0.7294	293.597
3414	0.5	Extremo 2A	27.865	386.998	-3E-08	-25.8592	-0.7294	105.547
3414	1	Extremo 2A	27.865	408.795	-3E-08	-25.8592	-0.7294	-93.4009
3415	0	Extremo 1A	27.865	442.261	-2.2E-08	-26.7848	-0.7294	-123.936
3415	0.5	Extremo 1A	27.865	464.059	-2.2E-08	-26.7848	-0.7294	-350.516
3415	1	Extremo 1A	27.865	485.856	-2.2E-08	-26.7848	-0.7294	-587.994
3415	0	Extremo 2A	27.865	442.253	-2.2E-08	-26.7849	-0.7294	-123.862
3415	0.5	Extremo 2A	27.865	464.051	-2.2E-08	-26.7849	-0.7294	-350.438
3415	1	Extremo 2A	27.865	485.848	-2.2E-08	-26.7849	-0.7294	-587.913
3416	0	Extremo 1A	27.865	434.682	-1.6E-08	-21.5624	-0.7294	-657.09
3416	0.5	Extremo 1A	27.865	456.479	-1.6E-08	-21.5624	-0.7294	-879.881
3416	1	Extremo 1A	27.865	478.277	-1.6E-08	-21.5624	-0.7294	-1113.57
3416	0	Extremo 2A	27.865	434.677	-1.6E-08	-21.5626	-0.7294	-657.007
3416	0.5	Extremo 2A	27.865	456.474	-1.6E-08	-21.5626	-0.7294	-879.794
3416	1	Extremo 2A	27.865	478.272	-1.6E-08	-21.5626	-0.7294	-1113.48
3417	0	Extremo 1A	27.865	202.824	-1.2E-08	-8.6165	-0.7294	-1216.5
3417	0.5	Extremo 1A	27.865	224.621	-1.2E-08	-8.6165	-0.7294	-1323.36
3417	1	Extremo 1A	27.865	246.419	-1.2E-08	-8.6165	-0.7294	-1441.12
3417	0	Extremo 2A	27.865	202.828	-1.2E-08	-8.6167	-0.7294	-1216.4
3417	0.5	Extremo 2A	27.865	224.625	-1.2E-08	-8.6167	-0.7294	-1323.27
3417	1	Extremo 2A	27.865	246.423	-1.2E-08	-8.6167	-0.7294	-1441.03
3418	0	Extremo 1A	27.865	-246.863	-8.8E-09	8.6213	-0.7294	-1441.12
3418	0.5	Extremo 1A	27.865	-225.065	-8.8E-09	8.6213	-0.7294	-1323.14
3418	1	Extremo 1A	27.865	-203.268	-8.8E-09	8.6213	-0.7294	-1216.05
3418	0	Extremo 2A	27.865	-246.844	-8.8E-09	8.6213	-0.7294	-1441.03
3418	0.5	Extremo 2A	27.865	-225.046	-8.8E-09	8.6213	-0.7294	-1323.06
3418	1	Extremo 2A	27.865	-203.249	-8.8E-09	8.6213	-0.7294	-1215.98
3419	0	Extremo 1A	27.865	-478.721	-6.4E-09	21.5673	-0.7294	-1113.13
3419	0.5	Extremo 1A	27.865	-456.923	-6.4E-09	21.5673	-0.7294	-879.214
3419	1	Extremo 1A	27.865	-435.126	-6.4E-09	21.5673	-0.7294	-656.202
3419	0	Extremo 2A	27.865	-478.693	-6.3E-09	21.5673	-0.7294	-1113.06
3419	0.5	Extremo 2A	27.865	-456.895	-6.3E-09	21.5673	-0.7294	-879.163
3419	1	Extremo 2A	27.865	-435.098	-6.3E-09	21.5673	-0.7294	-656.164
3420	0	Extremo 1A	27.865	-486.3	-4.5E-09	26.7897	-0.7294	-587.106
3420	0.5	Extremo 1A	27.865	-464.502	-4.5E-09	26.7897	-0.7294	-349.405
3420	1	Extremo 1A	27.865	-442.705	-4.5E-09	26.7897	-0.7294	-122.603
3420	0	Extremo 2A	27.865	-486.269	-4.5E-09	26.7895	-0.7294	-587.07
3420	0.5	Extremo 2A	27.865	-464.472	-4.5E-09	26.7895	-0.7294	-349.385
3420	1	Extremo 2A	27.865	-442.674	-4.5E-09	26.7895	-0.7294	-122.598
3421	0	Extremo 1A	27.865	-409.247	-3.1E-09	25.864	-0.7294	-92.1414
3421	0.5	Extremo 1A	27.865	-387.45	-3.1E-09	25.864	-0.7294	107.033
3421	1	Extremo 1A	27.865	-365.652	-3.1E-09	25.864	-0.7294	295.308
3421	0	Extremo 2A	27.865	-409.216	-3.1E-09	25.8638	-0.7294	-92.1368

3421	0.5	Extremo 2A	27.865	-387.419	-3.1E-09	25.8638	-0.7294	107.022
3421	1	Extremo 2A	27.865	-365.621	-3.1E-09	25.8638	-0.7294	295.282
3422	0	Extremo 1A	27.865	-313.311	-2.1E-09	21.3205	-0.7294	307.13
3422	0.5	Extremo 1A	27.865	-291.514	-2.1E-09	21.3205	-0.7294	458.337
3422	1	Extremo 1A	27.865	-269.716	-2.1E-09	21.3205	-0.7294	598.644
3422	0	Extremo 2A	27.865	-313.28	-2E-09	21.3202	-0.7294	307.103
3422	0.5	Extremo 2A	27.865	-291.483	-2E-09	21.3202	-0.7294	458.294
3422	1	Extremo 2A	27.865	-269.685	-2E-09	21.3202	-0.7294	598.586
3423	0	Extremo 1A	27.865	-215.555	-1.3E-09	14.921	-0.7294	603.318
3423	0.5	Extremo 1A	27.865	-193.758	-1.3E-09	14.921	-0.7294	705.646
3423	1	Extremo 1A	27.865	-171.96	-1.3E-09	14.921	-0.7294	797.075
3423	0	Extremo 2A	27.865	-215.524	-1.2E-09	14.9207	-0.7294	603.26
3423	0.5	Extremo 2A	27.865	-193.727	-1.2E-09	14.9207	-0.7294	705.572
3423	1	Extremo 2A	27.865	-171.929	-1.2E-09	14.9207	-0.7294	796.986
3424	0	Extremo 1A	27.865	-118.422	-7.2E-10	7.6371	-0.7294	798.972
3424	0.5	Extremo 1A	27.865	-96.625	-7.2E-10	7.6371	-0.7294	852.733
3424	1	Extremo 1A	27.865	-74.827	-7.2E-10	7.6371	-0.7294	895.596
3424	0	Extremo 2A	27.865	-118.391	-6.1E-10	7.6368	-0.7294	798.882
3424	0.5	Extremo 2A	27.865	-96.594	-6.1E-10	7.6368	-0.7294	852.629
3424	1	Extremo 2A	27.865	-74.796	-6.1E-10	7.6368	-0.7294	895.476
3425	0	Extremo 1A	27.865	-21.697	-2.7E-10	-0.00096	-0.7294	896.122
3425	0.5	Extremo 1A	27.865	0.1	-2.7E-10	-0.00096	-0.7294	901.521
3425	1	Extremo 1A	27.865	21.898	-2.7E-10	-0.00096	-0.7294	896.022
3425	0	Extremo 2A	27.865	-21.666	-1.2E-10	-0.0013	-0.7294	896.002
3425	0.5	Extremo 2A	27.865	0.131	-1.2E-10	-0.0013	-0.7294	901.385
3425	1	Extremo 2A	27.865	21.929	-1.2E-10	-0.0013	-0.7294	895.87
3426	0	Extremo 1A	27.865	75.028	5.7E-11	-7.639	-0.7294	895.495
3426	0.5	Extremo 1A	27.865	96.825	5.7E-11	-7.639	-0.7294	852.532
3426	1	Extremo 1A	27.865	118.623	5.7E-11	-7.639	-0.7294	798.67
3426	0	Extremo 2A	27.865	75.059	2.6E-10	-7.6393	-0.7294	895.344
3426	0.5	Extremo 2A	27.865	96.856	2.6E-10	-7.6393	-0.7294	852.365
3426	1	Extremo 2A	27.865	118.654	2.6E-10	-7.6393	-0.7294	798.487
3427	0	Extremo 1A	27.865	172.161	3.2E-10	-14.9226	-0.7294	796.773
3427	0.5	Extremo 1A	27.865	193.959	3.2E-10	-14.9226	-0.7294	705.243
3427	1	Extremo 1A	27.865	215.756	3.2E-10	-14.9226	-0.7294	602.814
3427	0	Extremo 2A	27.865	172.192	5.9E-10	-14.9228	-0.7294	796.59
3427	0.5	Extremo 2A	27.865	193.99	5.9E-10	-14.9228	-0.7294	705.044
3427	1	Extremo 2A	27.865	215.787	5.9E-10	-14.9228	-0.7294	602.6
3428	0	Extremo 1A	27.865	269.918	5.1E-10	-21.3217	-0.7294	598.138
3428	0.5	Extremo 1A	27.865	291.715	5.1E-10	-21.3217	-0.7294	457.73
3428	1	Extremo 1A	27.865	313.513	5.1E-10	-21.3217	-0.7294	306.423
3428	0	Extremo 2A	27.865	269.949	8.7E-10	-21.3218	-0.7294	597.924
3428	0.5	Extremo 2A	27.865	291.747	8.7E-10	-21.3218	-0.7294	457.5
3428	1	Extremo 2A	27.865	313.544	8.7E-10	-21.3218	-0.7294	306.177
3429	0	Extremo 1A	27.865	365.853	6.7E-10	-25.8644	-0.7294	294.596
3429	0.5	Extremo 1A	27.865	387.651	6.7E-10	-25.8644	-0.7294	106.22
3429	1	Extremo 1A	27.865	409.448	6.7E-10	-25.8644	-0.7294	-93.0548
3429	0	Extremo 2A	27.865	365.884	1.1E-09	-25.8643	-0.7294	294.349
3429	0.5	Extremo 2A	27.865	387.682	1.1E-09	-25.8643	-0.7294	105.957
3429	1	Extremo 2A	27.865	409.479	1.1E-09	-25.8643	-0.7294	-93.3329
3430	0	Extremo 1A	27.865	442.898	7.8E-10	-26.7886	-0.7294	-123.53
3430	0.5	Extremo 1A	27.865	464.695	7.8E-10	-26.7886	-0.7294	-350.428
3430	1	Extremo 1A	27.865	486.493	7.8E-10	-26.7886	-0.7294	-588.225
3430	0	Extremo 2A	27.865	442.927	1.4E-09	-26.7882	-0.7294	-123.811
3430	0.5	Extremo 2A	27.865	464.724	1.4E-09	-26.7882	-0.7294	-350.724
3430	1	Extremo 2A	27.865	486.522	1.4E-09	-26.7882	-0.7294	-588.535
3431	0	Extremo 1A	27.865	435.275	8.8E-10	-21.5645	-0.7294	-657.35
3431	0.5	Extremo 1A	27.865	457.072	8.8E-10	-21.5645	-0.7294	-880.437
3431	1	Extremo 1A	27.865	478.87	8.8E-10	-21.5645	-0.7294	-1114.42
3431	0	Extremo 2A	27.865	435.293	1.7E-09	-21.5636	-0.7294	-657.668
3431	0.5	Extremo 2A	27.865	457.091	1.7E-09	-21.5636	-0.7294	-880.764
3431	1	Extremo 2A	27.865	478.888	1.7E-09	-21.5636	-0.7294	-1114.76
3432	0	Extremo 1A	27.865	203.279	9.7E-10	-8.6183	-0.7294	-1217.39
3432	0.5	Extremo 1A	27.865	225.077	9.7E-10	-8.6183	-0.7294	-1324.48
3432	1	Extremo 1A	27.865	246.874	9.7E-10	-8.6183	-0.7294	-1442.47
3432	0	Extremo 2A	27.865	203.264	2.1E-09	-8.6173	-0.7294	-1217.74
3432	0.5	Extremo 2A	27.865	225.061	2.1E-09	-8.6173	-0.7294	-1324.82
3432	1	Extremo 2A	27.865	246.859	2.1E-09	-8.6173	-0.7294	-1442.8
3433	0	Extremo 1A	27.865	-246.637	1E-09	8.6157	-0.7294	-1442.47
3433	0.5	Extremo 1A	27.865	-224.839	1E-09	8.6157	-0.7294	-1324.6
3433	1	Extremo 1A	27.865	-203.042	1E-09	8.6157	-0.7294	-1217.63
3433	0	Extremo 2A	27.865	-246.708	2.5E-09	8.6157	-0.7294	-1442.8
3433	0.5	Extremo 2A	27.865	-224.911	2.5E-09	8.6157	-0.7294	-1324.89
3433	1	Extremo 2A	27.865	-203.113	2.5E-09	8.6157	-0.7294	-1217.89
3434	0	Extremo 1A	27.865	-478.633	1.1E-09	21.5619	-0.7294	-1114.66
3434	0.5	Extremo 1A	27.865	-456.835	1.1E-09	21.5619	-0.7294	-880.793
3434	1	Extremo 1A	27.865	-435.038	1.1E-09	21.5619	-0.7294	-657.825
3434	0	Extremo 2A	27.865	-478.738	3.1E-09	21.562	-0.7294	-1114.91
3434	0.5	Extremo 2A	27.865	-456.94	3.1E-09	21.562	-0.7294	-880.989
3434	1	Extremo 2A	27.865	-435.143	3.1E-09	21.562	-0.7294	-657.968
3435	0	Extremo 1A	27.865	-486.256	1.2E-09	26.7861	-0.7294	-588.7
3435	0.5	Extremo 1A	27.865	-464.458	1.2E-09	26.7861	-0.7294	-351.021
3435	1	Extremo 1A	27.865	-442.661	1.2E-09	26.7861	-0.7294	-124.242
3435	0	Extremo 2A	27.865	-486.372	3.8E-09	26.7866	-0.7294	-588.836
3435	0.5	Extremo 2A	27.865	-464.574	3.8E-09	26.7866	-0.7294	-351.1
3435	1	Extremo 2A	27.865	-442.777	3.8E-09	26.7866	-0.7294	-124.262
3436	0	Extremo 1A	27.865	-409.211	1.3E-09	25.8619	-0.7294	-93.7671
3436	0.5	Extremo 1A	27.865	-387.414	1.3E-09	25.8619	-0.7294	105.389
3436	1	Extremo 1A	27.865	-365.616	1.3E-09	25.8619	-0.7294	293.647
3436	0	Extremo 2A	27.865	-409.329	4.7E-09	25.8628	-0.7294	-93.7846
3436	0.5	Extremo 2A	27.865	-387.532	4.7E-09	25.8628	-0.7294	105.431
3436	1	Extremo 2A	27.865	-365.734	4.7E-09	25.8628	-0.7294	293.747
3437	0	Extremo 1A	27.865	-313.276	1.4E-09	21.3192	-0.7294	305.473
3437	0.5	Extremo 1A	27.865	-291.478	1.4E-09	21.3192	-0.7294	456.662
3437	1	Extremo 1A	27.865	-269.681	1.4E-09	21.3192	-0.7294	596.951
3437	0	Extremo 2A	27.865	-313.394	6E-09	21.3202	-0.7294	305.575
3437	0.5	Extremo 2A	27.865	-291.596	6E-09	21.3202	-0.7294	456.823
3437	1	Extremo 2A	27.865	-269.799	6E-09	21.3202	-0.7294	597.171
3438	0	Extremo 1A	27.865	-215.519	1.5E-09	14.9201	-0.7294	601.627
3438	0.5	Extremo 1A	27.865	-193.721	1.5E-09	14.9201	-0.7294	703.937
3438	1	Extremo 1A	27.865	-171.924	1.5E-09	14.9201	-0.7294	795.348
3438	0	Extremo 2A	27.865	-215.637	7.7E-09	14.9213	-0.7294	601.847
3438	0.5	Extremo 2A	27.865	-193.839	7.7E-09	14.9213	-0.7294	704.216
3438	1	Extremo 2A	27.865	-172.042	7.7E-09	14.9213	-0.7294	795.687
3439	0	Extremo 1A	27.865	-118.386	1.7E-09	7.6366	-0.7294	797.245
3439	0.5	Extremo 1A	27.865	-96.588	1.7E-09	7.6366	-0.7294	850.989
3439	1	Extremo 1A	27.865	-74.791	1.7E-09	7.6366	-0.7294	893.833
3439	0	Extremo 2A	27.865	-118.503	9.9E-09	7.6378	-0.7294	797.584
3439	0.5	Extremo 2A	27.865	-96.706	9.9E-09	7.6378	-0.7294	851.386
3439	1	Extremo 2A	27.865	-74.908	9.9E-09	7.6378	-0.7294	894.29
3440	0	Extremo 1A	27.865	-21.661	1.9E-09	-0.0013	-0.7294	894.359
3440	0.5	Extremo 1A	27.865	0.137	1.9E-09	-0.0013	-0.7294	899.74
3440	1	Extremo 1A	27.865	21.934	1.9E-09	-0.0013	-0.7294	894.222
3440	0	Extremo 2A	27.865	-21.778	1.3E-08	-0.00014	-0.7294	894.816
3440	0.5	Extremo 2A	27.865	0.019	1.3E-08	-0.00014	-0.7294	900.256
3440	1	Extremo 2A	27.865	21.817	1.3E-08	-0.00014	-0.7294	894.797
3441	0	Extremo 1A	27.865	75.064	2.2E-09	-7.6391	-0.7294	893.695
3441	0.5	Extremo 1A	27.865	96.862	2.2E-09	-7.6391	-0.7294	850.714
3441	1	Extremo 1A	27.865	118.659	2.2E-09	-7.6391	-0.7294	796.833
3441	0	Extremo 2A	27.865	74.947	1.7E-08	-7.638	-0.7294	894.271
3441	0.5	Extremo 2A	27.865	96.744	1.7E-08	-7.638	-0.7294	851.348
3441	1	Extremo 2A	27.865	118.542	1.7E-08	-7.638	-0.7294	797.527
3442	0	Extremo 1A	27.865	172.198	2.6E-09	-14.9224	-0.7294	794.935
3442	0.5	Extremo 1A	27.865	193.996	2.6E-09	-14.9224	-0.7294	703.386
3442	1	Extremo 1A	27.865	215.793	2.6E-09	-14.9224	-0.7294	600.939
3442	0	Extremo 2A	27.865	172.08	2.2E-08	-14.9215	-0.7294	795.629
3442	0.5	Extremo 2A	27.865	193.877	2.2E-08	-14.9215	-0.7294	704.14
3442	1	Extremo 2A	27.865	215.675	2.2E-08	-14.9215	-0.7294	601.751
3443	0	Extremo 1A	27.865	269.956	3.2E-09	-21.3208	-0.7294	596.261
3443	0.5	Extremo 1A	27.865	291.753	3.2E-09	-21.3208	-0.7294	455.834
3443	1	Extremo 1A	27.865	313.551	3.2E-09	-21.3208	-0.7294	304.508
3443	0	Extremo 2A	27.865	269.837	2.9E-08	-21.3204	-0.7294	597.075
3443	0.5	Extremo 2A	27.865	291.635	2.9E-08	-21.3204	-0.7294	456.707
3443	1	Extremo 2A	27.865	313.432	2.9E-08	-21.3204	-0.7294	305.441
3444	0	Extremo 1A	27.865	365.891	3.9E-09	-25.8624	-0.7294	292.674
3444	0.5	Extremo 1A	27.865	387.688	3.9E-09	-25.8624	-0.7294	104.28
3444	1	Extremo 1A	27.865	409.486	3.9E-09	-25.8624	-0.7294	-95.0139
3444	0	Extremo 2A	27.865	365.772	3.9E-08	-25.8628	-0.7294	293.612
3444	0.5	Extremo 2A	27.865	387.57	3.9E-08	-25.8628	-0.7294	105.276
3444	1	Extremo 2A	27.865	409.367	3.9E-08	-25.8628	-0.7294	-93.9582
3445	0	Extremo 1A	27.865	442.924	4.8E-09	-26.7847	-0.7294	-125.506
3445	0.5	Extremo 1A	27.865	464.721	4.8E-09	-26.7847	-0.7294	-352.417
3445	1	Extremo 1A	27.865	486.519	4.8E-09	-26.7847	-0.7294	-590.227
3445	0	Extremo 2A	27.865	442.813	5.1E-08	-26.7864	-0.7294	-124.438

3445	0.5	Extremo 2A	27.865	464.611	5.1E-08	-26.7864	-0.7294	-351.294
3445	1	Extremo 2A	27.865	486.408	5.1E-08	-26.7864	-0.7294	-589.049
3446	0	Extremo 1A	27.865	435.241	6.1E-09	-21.558	-0.7294	-659.392
3446	0.5	Extremo 1A	27.865	457.039	6.1E-09	-21.558	-0.7294	-882.462
3446	1	Extremo 1A	27.865	478.836	6.1E-09	-21.558	-0.7294	-1116.43
3446	0	Extremo 2A	27.865	435.171	6.8E-08	-21.5615	-0.7294	-658.187
3446	0.5	Extremo 2A	27.865	456.969	6.8E-08	-21.5615	-0.7294	-881.222
3446	1	Extremo 2A	27.865	478.766	6.8E-08	-21.5615	-0.7294	-1115.16
3447	0	Extremo 1A	27.865	203.057	7.8E-09	-8.6115	-0.7294	-1219.46
3447	0.5	Extremo 1A	27.865	224.855	7.8E-09	-8.6115	-0.7294	-1326.44
3447	1	Extremo 1A	27.865	246.652	7.8E-09	-8.6115	-0.7294	-1444.31
3447	0	Extremo 2A	27.865	203.116	9.1E-08	-8.6154	-0.7294	-1218.14
3447	0.5	Extremo 2A	27.865	224.913	9.1E-08	-8.6154	-0.7294	-1325.15
3447	1	Extremo 2A	27.865	246.711	9.1E-08	-8.6154	-0.7294	-1443.06
3448	0	Extremo 1A	27.865	-247.172	1E-08	8.6173	-0.7294	-1444.31
3448	0.5	Extremo 1A	27.865	-225.374	1E-08	8.6173	-0.7294	-1326.18
3448	1	Extremo 1A	27.865	-203.577	1E-08	8.6173	-0.7294	-1218.94
3448	0	Extremo 2A	27.865	-246.9	1.2E-07	8.6166	-0.7294	-1443.06
3448	0.5	Extremo 2A	27.865	-225.103	1.2E-07	8.6166	-0.7294	-1325.06
3448	1	Extremo 2A	27.865	-203.305	1.2E-07	8.6166	-0.7294	-1217.95
3449	0	Extremo 1A	27.865	-479.355	1.3E-08	21.5639	-0.7294	-1115.91
3449	0.5	Extremo 1A	27.865	-457.558	1.3E-08	21.5639	-0.7294	-881.682
3449	1	Extremo 1A	27.865	-435.76	1.3E-08	21.5639	-0.7294	-658.353
3449	0	Extremo 2A	27.865	-478.956	1.6E-07	21.5627	-0.7294	-1114.97
3449	0.5	Extremo 2A	27.865	-457.158	1.6E-07	21.5627	-0.7294	-880.937
3449	1	Extremo 2A	27.865	-435.361	1.6E-07	21.5627	-0.7294	-657.807
3450	0	Extremo 1A	27.865	-487.038	1.7E-08	26.7905	-0.7294	-589.188
3450	0.5	Extremo 1A	27.865	-465.24	1.7E-08	26.7905	-0.7294	-351.118
3450	1	Extremo 1A	27.865	-443.443	1.7E-08	26.7905	-0.7294	-123.947
3450	0	Extremo 2A	27.865	-486.598	2.2E-07	26.7876	-0.7294	-588.669
3450	0.5	Extremo 2A	27.865	-464.8	2.2E-07	26.7876	-0.7294	-350.82
3450	1	Extremo 2A	27.865	-443.003	2.2E-07	26.7876	-0.7294	-123.869
3451	0	Extremo 1A	27.865	-410.005	2.2E-08	25.8682	-0.7294	-93.4547
3451	0.5	Extremo 1A	27.865	-388.207	2.2E-08	25.8682	-0.7294	106.098
3451	1	Extremo 1A	27.865	-366.41	2.2E-08	25.8682	-0.7294	294.752
3451	0	Extremo 2A	27.865	-409.557	2.9E-07	25.864	-0.7294	-93.3886
3451	0.5	Extremo 2A	27.865	-387.759	2.9E-07	25.864	-0.7294	105.941
3451	1	Extremo 2A	27.865	-365.962	2.9E-07	25.864	-0.7294	294.371
3452	0	Extremo 1A	27.865	-314.07	3E-08	21.3266	-0.7294	306.587
3452	0.5	Extremo 1A	27.865	-292.272	3E-08	21.3266	-0.7294	458.172
3452	1	Extremo 1A	27.865	-270.475	3E-08	21.3266	-0.7294	598.859
3452	0	Extremo 2A	27.865	-313.622	3.9E-07	21.3216	-0.7294	306.2
3452	0.5	Extremo 2A	27.865	-291.824	3.9E-07	21.3216	-0.7294	457.562
3452	1	Extremo 2A	27.865	-270.027	3.9E-07	21.3216	-0.7294	598.024
3453	0	Extremo 1A	27.865	-216.312	3.9E-08	14.9281	-0.7294	603.538
3453	0.5	Extremo 1A	27.865	-194.514	3.9E-08	14.9281	-0.7294	706.245
3453	1	Extremo 1A	27.865	-172.717	3.9E-08	14.9281	-0.7294	798.053
3453	0	Extremo 2A	27.865	-215.865	5.2E-07	14.9227	-0.7294	602.701
3453	0.5	Extremo 2A	27.865	-194.067	5.2E-07	14.9227	-0.7294	705.184
3453	1	Extremo 2A	27.865	-172.27	5.2E-07	14.9227	-0.7294	796.768
3454	0	Extremo 1A	27.865	-119.178	5.2E-08	7.6446	-0.7294	799.952
3454	0.5	Extremo 1A	27.865	-97.381	5.2E-08	7.6446	-0.7294	854.092
3454	1	Extremo 1A	27.865	-75.583	5.2E-08	7.6446	-0.7294	897.333
3454	0	Extremo 2A	27.865	-118.731	7E-07	7.6391	-0.7294	798.666
3454	0.5	Extremo 2A	27.865	-96.934	7E-07	7.6391	-0.7294	852.582
3454	1	Extremo 2A	27.865	-75.136	7E-07	7.6391	-0.7294	895.6
3455	0	Extremo 1A	27.865	-22.453	6.9E-08	0.0065	-0.7294	897.862
3455	0.5	Extremo 1A	27.865	-0.656	6.9E-08	0.0065	-0.7294	903.639
3455	1	Extremo 1A	27.865	21.142	6.9E-08	0.0065	-0.7294	898.518
3455	0	Extremo 2A	27.865	-22.006	9.3E-07	0.0011	-0.7294	896.127
3455	0.5	Extremo 2A	27.865	-0.209	9.3E-07	0.0011	-0.7294	901.68
3455	1	Extremo 2A	27.865	21.589	9.3E-07	0.0011	-0.7294	896.335
3456	0	Extremo 1A	27.865	74.271	9.2E-08	-7.6321	-0.7294	897.995
3456	0.5	Extremo 1A	27.865	96.069	9.2E-08	-7.6321	-0.7294	855.41
3456	1	Extremo 1A	27.865	117.866	9.2E-08	-7.6321	-0.7294	801.926
3456	0	Extremo 2A	27.865	74.719	1.3E-06	-7.637	-0.7294	895.81
3456	0.5	Extremo 2A	27.865	96.516	1.3E-06	-7.637	-0.7294	853.001
3456	1	Extremo 2A	27.865	118.314	1.3E-06	-7.637	-0.7294	799.294
3457	0	Extremo 1A	27.865	171.403	1.2E-07	-14.9169	-0.7294	800.034
3457	0.5	Extremo 1A	27.865	193.201	1.2E-07	-14.9169	-0.7294	708.883
3457	1	Extremo 1A	27.865	214.998	1.2E-07	-14.9169	-0.7294	606.834
3457	0	Extremo 2A	27.865	171.852	1.7E-06	-14.9209	-0.7294	797.398
3457	0.5	Extremo 2A	27.865	193.649	1.7E-06	-14.9209	-0.7294	706.023
3457	1	Extremo 2A	27.865	215.447	1.7E-06	-14.9209	-0.7294	603.749
3458	0	Extremo 1A	27.865	269.157	1.6E-07	-21.3182	-0.7294	602.169
3458	0.5	Extremo 1A	27.865	290.955	1.6E-07	-21.3182	-0.7294	462.141
3458	1	Extremo 1A	27.865	312.752	1.6E-07	-21.3182	-0.7294	311.214
3458	0	Extremo 2A	27.865	269.608	2.3E-06	-21.3205	-0.7294	599.077
3458	0.5	Extremo 2A	27.865	291.405	2.3E-06	-21.3205	-0.7294	458.824
3458	1	Extremo 2A	27.865	313.203	2.3E-06	-21.3205	-0.7294	307.672
3459	0	Extremo 1A	27.865	365.094	2.2E-07	-25.8654	-0.7294	299.413
3459	0.5	Extremo 1A	27.865	386.891	2.2E-07	-25.8654	-0.7294	111.416
3459	1	Extremo 1A	27.865	408.689	2.2E-07	-25.8654	-0.7294	-87.479
3459	0	Extremo 2A	27.865	365.543	3E-06	-25.8642	-0.7294	295.853
3459	0.5	Extremo 2A	27.865	387.341	3E-06	-25.8642	-0.7294	107.632
3459	1	Extremo 2A	27.865	409.138	3E-06	-25.8642	-0.7294	-91.4879
3460	0	Extremo 1A	27.865	442.181	2.9E-07	-26.7972	-0.7294	-117.888
3460	0.5	Extremo 1A	27.865	463.978	2.9E-07	-26.7972	-0.7294	-344.428
3460	1	Extremo 1A	27.865	485.776	2.9E-07	-26.7972	-0.7294	-581.867
3460	0	Extremo 2A	27.865	442.601	4.1E-06	-26.7899	-0.7294	-121.942
3460	0.5	Extremo 2A	27.865	464.399	4.1E-06	-26.7899	-0.7294	-348.692
3460	1	Extremo 2A	27.865	486.196	4.1E-06	-26.7899	-0.7294	-586.341
3461	0	Extremo 1A	27.865	434.784	3.9E-07	-21.5827	-0.7294	-650.843
3461	0.5	Extremo 1A	27.865	456.582	3.9E-07	-21.5827	-0.7294	-873.684
3461	1	Extremo 1A	27.865	478.379	3.9E-07	-21.5827	-0.7294	-1107.42
3461	0	Extremo 2A	27.865	435.05	5.4E-06	-21.5667	-0.7294	-655.419
3461	0.5	Extremo 2A	27.865	456.848	5.4E-06	-21.5667	-0.7294	-878.393
3461	1	Extremo 2A	27.865	478.645	5.4E-06	-21.5667	-0.7294	-1112.27
3462	0	Extremo 1A	27.865	203.502	5.3E-07	-8.6387	-0.7294	-1210.17
3462	0.5	Extremo 1A	27.865	225.299	5.3E-07	-8.6387	-0.7294	-1317.37
3462	1	Extremo 1A	27.865	247.097	5.3E-07	-8.6387	-0.7294	-1435.47
3462	0	Extremo 2A	27.865	203.282	7.3E-06	-8.6166	-0.7294	-1215.17
3462	0.5	Extremo 2A	27.865	225.079	7.3E-06	-8.6166	-0.7294	-1322.26
3462	1	Extremo 2A	27.865	246.877	7.3E-06	-8.6166	-0.7294	-1440.24
3463	0	Extremo 1A	27.865	-245.227	7E-07	8.6135	-0.7294	-1435.47
3463	0.5	Extremo 1A	27.865	-223.429	7E-07	8.6135	-0.7294	-1318.31
3463	1	Extremo 1A	27.865	-201.632	7E-07	8.6135	-0.7294	-1212.04
3463	0	Extremo 2A	27.865	-246.257	9.8E-06	8.6309	-0.7294	-1440.24
3463	0.5	Extremo 2A	27.865	-224.459	9.8E-06	8.6309	-0.7294	-1322.57
3463	1	Extremo 2A	27.865	-202.662	9.8E-06	8.6309	-0.7295	-1215.79
3464	0	Extremo 1A	27.865	-476.509	9.4E-07	21.5575	-0.7294	-1109.3
3464	0.5	Extremo 1A	27.865	-454.711	9.4E-07	21.5575	-0.7294	-876.493
3464	1	Extremo 1A	27.865	-432.914	9.4E-07	21.5575	-0.7294	-654.586
3464	0	Extremo 2A	27.865	-478.026	1.3E-05	21.581	-0.7294	-1112.89
3464	0.5	Extremo 2A	27.865	-456.228	1.3E-05	21.581	-0.7294	-879.324
3464	1	Extremo 2A	27.865	-434.431	1.3E-05	21.581	-0.7295	-656.659
3465	0	Extremo 1A	27.865	-483.906	1.3E-06	26.7721	-0.7294	-585.612
3465	0.5	Extremo 1A	27.865	-462.108	1.3E-06	26.7721	-0.7294	-349.109
3465	1	Extremo 1A	27.865	-440.311	1.3E-06	26.7721	-0.7294	-123.504
3465	0	Extremo 2A	27.865	-485.577	1.8E-05	26.8042	-0.7294	-587.582
3465	0.5	Extremo 2A	27.865	-463.779	1.8E-05	26.8042	-0.7294	-350.243
3465	1	Extremo 2A	27.865	-441.982	1.8E-05	26.8042	-0.7295	-123.802
3466	0	Extremo 1A	27.865	-406.819	1.7E-06	25.8403	-0.7294	-93.0974
3466	0.5	Extremo 1A	27.865	-385.021	1.7E-06	25.8403	-0.7294	104.863
3466	1	Extremo 1A	27.865	-363.224	1.7E-06	25.8403	-0.7294	291.924
3466	0	Extremo 2A	27.865	-408.519	2.4E-05	25.8784	-0.7294	-93.349
3466	0.5	Extremo 2A	27.865	-386.721	2.4E-05	25.8784	-0.7294	105.461
3466	1	Extremo 2A	27.865	-364.924	2.4E-05	25.8784	-0.7295	293.372
3467	0	Extremo 1A	27.865	-310.882	2.3E-06	21.2934	-0.7294	303.723
3467	0.5	Extremo 1A	27.865	-289.085	2.3E-06	21.2934	-0.7294	453.714
3467	1	Extremo 1A	27.865	-267.287	2.3E-06	21.2934	-0.7294	592.807
3467	0	Extremo 2A	27.865	-312.583	3.2E-05	21.3347	-0.7294	305.19
3467	0.5	Extremo 2A	27.865	-290.786	3.2E-05	21.3347	-0.7294	456.033
3467	1	Extremo 2A	27.865	-268.988	3.2E-05	21.3347	-0.7295	595.976
3468	0	Extremo 1A	27.865	-213.128	3.1E-06	14.8924	-0.7294	597.469
3468	0.5	Extremo 1A	27.865	-191.331	3.1E-06	14.8924	-0.7294	698.584
3468	1	Extremo 1A	27.865	-169.533	3.1E-06	14.8924	-0.7294	788.8
3468	0	Extremo 2A	27.865	-214.827	4.3E-05	14.9351	-0.7294	600.647
3468	0.5	Extremo 2A	27.865	-193.03	4.3E-05	14.9351	-0.7294	702.611
3468	1	Extremo 2A	27.865	-171.232	4.3E-05	14.9351	-0.7295	793.677
3469	0	Extremo 1A	27.865	-115.997	4.1E-06	7.6083	-0.7294	790.687
3469	0.5	Extremo 1A	27.865	-94.199	4.1E-06	7.6083	-0.7294	843.236
3469	1	Extremo 1A	27.865	-72.402	4.1E-06	7.6083	-0.7294	884.886
3469	0	Extremo 2A	27.865	-117.695	5.8E-05	7.6512	-0.7294	795.571

3469	0.5	Extremo 2A	27.865	-95.897	5.8E-05	7.6512	-0.7294	848.969
3469	1	Extremo 2A	27.865	-74.1	5.8E-05	7.6512	-0.7295	891.468
3470	0	Extremo 1A	27.865	-19.272	5.5E-06	-0.0289	-0.7294	885.402
3470	0.5	Extremo 1A	27.865	2.526	5.5E-06	-0.0289	-0.7294	889.589
3470	1	Extremo 1A	27.865	24.323	5.5E-06	-0.0289	-0.7294	882.877
3470	0	Extremo 2A	27.865	-20.97	7.8E-05	0.0129	-0.7294	891.991
3470	0.5	Extremo 2A	27.865	0.828	7.8E-05	0.0129	-0.7295	897.027
3470	1	Extremo 2A	27.865	22.625	7.8E-05	0.0129	-0.7295	891.163
3471	0	Extremo 1A	27.865	77.455	7.4E-06	-7.6645	-0.7294	882.337
3471	0.5	Extremo 1A	27.865	99.252	7.4E-06	-7.6645	-0.7294	838.161
3471	1	Extremo 1A	27.865	121.05	7.4E-06	-7.6645	-0.7294	783.085
3471	0	Extremo 2A	27.866	75.756	0.00011	-7.6254	-0.7294	890.633
3471	0.5	Extremo 2A	27.866	97.553	0.00011	-7.6254	-0.7295	847.306
3471	1	Extremo 2A	27.866	119.351	0.00011	-7.6254	-0.7295	793.08
3472	0	Extremo 1A	27.865	174.594	1E-05	-14.9431	-0.7294	781.167
3472	0.5	Extremo 1A	27.865	196.391	1E-05	-14.9431	-0.7294	688.421
3472	1	Extremo 1A	27.865	218.189	1E-05	-14.9431	-0.7295	584.776
3472	0	Extremo 2A	27.866	172.89	0.00014	-14.9097	-0.7294	791.176
3472	0.5	Extremo 2A	27.866	194.688	0.00014	-14.9097	-0.7295	699.282
3472	1	Extremo 2A	27.866	216.485	0.00014	-14.9097	-0.7295	596.489
3473	0	Extremo 1A	27.865	272.361	1.3E-05	-21.3324	-0.7294	580.059
3473	0.5	Extremo 1A	27.865	294.159	1.3E-05	-21.3324	-0.7294	438.429
3473	1	Extremo 1A	27.865	315.956	1.3E-05	-21.3324	-0.7295	285.9
3473	0	Extremo 2A	27.866	270.65	0.00019	-21.3102	-0.7294	591.8
3473	0.5	Extremo 2A	27.866	292.447	0.00019	-21.3102	-0.7295	451.026
3473	1	Extremo 2A	27.866	314.245	0.00019	-21.3102	-0.7296	299.353
3474	0	Extremo 1A	27.865	368.291	1.8E-05	-25.8563	-0.7294	273.974
3474	0.5	Extremo 1A	27.865	390.089	1.8E-05	-25.8563	-0.7294	84.3793
3474	1	Extremo 1A	27.865	411.886	1.8E-05	-25.8563	-0.7295	-116.115
3474	0	Extremo 2A	27.866	366.582	0.00026	-25.8565	-0.7293	287.495
3474	0.5	Extremo 2A	27.866	388.38	0.00026	-25.8565	-0.7295	98.7541
3474	1	Extremo 2A	27.866	410.177	0.00026	-25.8565	-0.7296	-100.885
3475	0	Extremo 1A	27.865	445.172	2.4E-05	-26.7473	-0.7294	-146.843
3475	0.5	Extremo 1A	27.865	466.97	2.4E-05	-26.7473	-0.7294	-374.878
3475	1	Extremo 1A	27.865	488.767	2.4E-05	-26.7473	-0.7295	-613.812
3475	0	Extremo 2A	27.867	443.572	0.00034	-26.7912	-0.7293	-131.442
3475	0.5	Extremo 2A	27.867	465.37	0.00034	-26.7912	-0.7295	-358.677
3475	1	Extremo 2A	27.867	487.167	0.00034	-26.7912	-0.7296	-596.811
3476	0	Extremo 1A	27.865	436.675	3.2E-05	-21.4767	-0.7294	-683.514
3476	0.5	Extremo 1A	27.865	458.472	3.2E-05	-21.4767	-0.7294	-907.301
3476	1	Extremo 1A	27.865	480.27	3.2E-05	-21.4767	-0.7295	-1141.99
3476	0	Extremo 2A	27.867	435.661	0.00046	-21.6012	-0.7292	-666.124
3476	0.5	Extremo 2A	27.867	457.458	0.00046	-21.6012	-0.7295	-889.404
3476	1	Extremo 2A	27.867	479.256	0.00046	-21.6012	-0.7297	-1123.58
3477	0	Extremo 1A	27.865	201.919	4.4E-05	-8.5022	-0.7294	-1245.82
3477	0.5	Extremo 1A	27.865	223.717	4.4E-05	-8.5022	-0.7294	-1352.23
3477	1	Extremo 1A	27.865	245.514	4.4E-05	-8.5022	-0.7295	-1469.53
3477	0	Extremo 2A	27.867	202.754	0.00063	-8.7553	-0.7292	-1226.83
3477	0.5	Extremo 2A	27.867	224.552	0.00063	-8.7553	-0.7295	-1333.66
3477	1	Extremo 2A	27.867	246.349	0.00063	-8.7553	-0.7298	-1451.39
3478	0	Extremo 1A	27.865	-252.589	5.9E-05	8.694	-0.7294	-1469.53
3478	0.5	Extremo 1A	27.865	-230.791	5.9E-05	8.694	-0.7294	-1348.68
3478	1	Extremo 1A	27.865	-208.994	5.9E-05	8.694	-0.7295	-1238.74
3478	0	Extremo 2A	27.868	-248.677	0.00084	8.2825	-0.7291	-1451.38
3478	0.5	Extremo 2A	27.868	-226.879	0.00084	8.2825	-0.7295	-1332.5
3478	1	Extremo 2A	27.868	-205.082	0.00084	8.2825	-0.7299	-1224.51
3479	0	Extremo 1A	27.865	-487.344	7.9E-05	21.6684	-0.7294	-1134.9
3479	0.5	Extremo 1A	27.865	-465.547	7.9E-05	21.6684	-0.7295	-896.678
3479	1	Extremo 1A	27.865	-443.749	7.9E-05	21.6684	-0.7295	-669.354
3479	0	Extremo 2A	27.869	-481.583	0.00113	21.1284	-0.7289	-1121.25
3479	0.5	Extremo 2A	27.869	-459.785	0.00113	21.1284	-0.7295	-885.909
3479	1	Extremo 2A	27.869	-437.988	0.00113	21.1284	-0.7301	-661.466
3480	0	Extremo 1A	27.866	-495.841	0.00011	26.9387	-0.7294	-599.644
3480	0.5	Extremo 1A	27.866	-474.044	0.00011	26.9387	-0.7295	-357.173
3480	1	Extremo 1A	27.866	-452.246	0.00011	26.9387	-0.7295	-125.6
3480	0	Extremo 2A	27.87	-489.494	0.00153	26.3186	-0.7288	-592.151
3480	0.5	Extremo 2A	27.87	-467.697	0.00153	26.3186	-0.7295	-352.853
3480	1	Extremo 2A	27.87	-445.899	0.00153	26.3186	-0.7303	-124.454
3481	0	Extremo 1A	27.866	-418.96	0.00014	26.0474	-0.7294	-94.8632
3481	0.5	Extremo 1A	27.866	-397.163	0.00014	26.0474	-0.7295	109.168
3481	1	Extremo 1A	27.866	-375.365	0.00014	26.0474	-0.7295	302.3
3481	0	Extremo 2A	27.871	-412.504	0.00206	25.3846	-0.7285	-93.8948
3481	0.5	Extremo 2A	27.871	-390.707	0.00206	25.3846	-0.7296	106.908
3481	1	Extremo 2A	27.871	-368.909	0.00206	25.3846	-0.7306	296.812
3482	0	Extremo 1A	27.866	-323.029	0.00019	21.5224	-0.7294	314.236
3482	0.5	Extremo 1A	27.866	-301.232	0.00019	21.5224	-0.7295	470.301
3482	1	Extremo 1A	27.866	-279.434	0.00019	21.5224	-0.7296	615.468
3482	0	Extremo 2A	27.873	-316.571	0.00277	20.8395	-0.7282	308.673
3482	0.5	Extremo 2A	27.873	-294.773	0.00277	20.8395	-0.7296	461.509
3482	1	Extremo 2A	27.873	-272.976	0.00277	20.8395	-0.731	603.447
3483	0	Extremo 1A	27.866	-225.261	0.00026	15.1313	-0.7293	620.198
3483	0.5	Extremo 1A	27.866	-203.464	0.00026	15.1313	-0.7295	727.38
3483	1	Extremo 1A	27.866	-181.666	0.00026	15.1313	-0.7296	823.662
3483	0	Extremo 2A	27.875	-218.81	0.00373	14.4415	-0.7278	608.139
3483	0.5	Extremo 2A	27.875	-197.013	0.00373	14.4415	-0.7297	712.094
3483	1	Extremo 2A	27.875	-175.215	0.00373	14.4415	-0.7315	805.151
3484	0	Extremo 1A	27.867	-128.122	0.00035	7.8488	-0.7293	825.598
3484	0.5	Extremo 1A	27.867	-106.325	0.00035	7.8488	-0.7295	884.21
3484	1	Extremo 1A	27.867	-84.527	0.00035	7.8488	-0.7296	931.923
3484	0	Extremo 2A	27.878	-121.674	0.00503	7.1626	-0.7272	807.059
3484	0.5	Extremo 2A	27.878	-99.876	0.00503	7.1626	-0.7297	862.447
3484	1	Extremo 2A	27.878	-78.079	0.00503	7.1626	-0.7323	906.935
3485	0	Extremo 1A	27.867	-31.397	0.00047	0.2057	-0.7292	932.487
3485	0.5	Extremo 1A	27.867	-9.6	0.00047	0.2057	-0.7295	942.737
3485	1	Extremo 1A	27.867	12.198	0.00047	0.2057	-0.7297	942.087
3485	0	Extremo 2A	27.881	-24.945	0.00678	-0.4645	-0.7265	907.472
3485	0.5	Extremo 2A	27.881	-3.148	0.00678	-0.4645	-0.7299	914.495
3485	1	Extremo 2A	27.881	18.65	0.00678	-0.4645	-0.7332	910.62
3486	0	Extremo 1A	27.868	65.32	0.00063	-7.4461	-0.7292	941.611
3486	0.5	Extremo 1A	27.868	87.118	0.00063	-7.4461	-0.7295	903.501
3486	1	Extremo 1A	27.868	108.915	0.00063	-7.4461	-0.7298	854.493
3486	0	Extremo 2A	27.885	71.783	0.00914	-8.0799	-0.7254	910.105
3486	0.5	Extremo 2A	27.885	93.581	0.00914	-8.0799	-0.73	868.764
3486	1	Extremo 2A	27.885	115.378	0.00914	-8.0799	-0.7346	816.524
3487	0	Extremo 1A	27.868	162.43	0.00085	-14.7586	-0.7291	852.676
3487	0.5	Extremo 1A	27.868	184.228	0.00085	-14.7586	-0.7295	766.012
3487	1	Extremo 1A	27.868	206.025	0.00085	-14.7586	-0.7299	668.448
3487	0	Extremo 2A	27.89	168.921	0.012	-15.3176	-0.724	814.645
3487	0.5	Extremo 2A	27.89	190.718	0.012	-15.3176	-0.7302	724.735
3487	1	Extremo 2A	27.89	212.516	0.012	-15.3176	-0.7363	623.927
3488	0	Extremo 1A	27.869	260.144	0.00115	-21.2149	-0.7289	663.933
3488	0.5	Extremo 1A	27.869	281.941	0.00115	-21.2149	-0.7295	528.411
3488	1	Extremo 1A	27.869	303.739	0.00115	-21.2149	-0.7301	381.991
3488	0	Extremo 2A	27.897	266.681	0.017	-21.6234	-0.7221	619.288
3488	0.5	Extremo 2A	27.897	288.479	0.017	-21.6234	-0.7304	480.498
3488	1	Extremo 2A	27.897	310.276	0.017	-21.6234	-0.7387	330.809
3489	0	Extremo 1A	27.87	356.094	0.00154	-25.8705	-0.7288	370.545
3489	0.5	Extremo 1A	27.87	377.892	0.00154	-25.8705	-0.7295	187.048
3489	1	Extremo 1A	27.87	399.689	0.00154	-25.8705	-0.7303	-7.3471
3489	0	Extremo 2A	27.904	362.644	0.022	-25.971	-0.7196	319.079
3489	0.5	Extremo 2A	27.904	384.442	0.022	-25.971	-0.7308	132.308
3489	1	Extremo 2A	27.904	406.239	0.022	-25.971	-0.742	-65.3628
3490	0	Extremo 1A	27.872	433.755	0.00208	-27.0123	-0.7285	-36.8537
3490	0.5	Extremo 1A	27.872	455.552	0.00208	-27.0123	-0.7296	-259.181
3490	1	Extremo 1A	27.872	477.35	0.00208	-27.0123	-0.7306	-492.406
3490	0	Extremo 2A	27.913	439.909	0.03	-26.458	-0.7162	-95.566
3490	0.5	Extremo 2A	27.913	461.706	0.03	-26.458	-0.7313	-320.97
3490	1	Extremo 2A	27.913	483.504	0.03	-26.458	-0.7464	-557.272
3491	0	Extremo 1A	27.873	429.443	0.0028	-22.1752	-0.7282	-559.338
3491	0.5	Extremo 1A	27.873	451.24	0.0028	-22.1752	-0.7296	-779.509
3491	1	Extremo 1A	27.873	473.038	0.0028	-22.1752	-0.731	-1010.58
3491	0	Extremo 2A	27.925	433.366	0.041	-20.1866	-0.7115	-625.738
3491	0.5	Extremo 2A	27.925	455.163	0.041	-20.1866	-0.7319	-847.871
3491	1	Extremo 2A	27.925	476.961	0.041	-20.1866	-0.7523	-1080.9
3492	0	Extremo 1A	27.876	207.898	0.00377	-9.8051	-0.7278	-1110.28
3492	0.5	Extremo 1A	27.876	229.695	0.00377	-9.8051	-0.7297	-1219.68
3492	1	Extremo 1A	27.876	251.493	0.00377	-9.8051	-0.7316	-1339.98
3492	0	Extremo 2A	27.938	204.757	0.055	-4.8281	-0.7053	-1182.85
3492	0.5	Extremo 2A	27.938	226.554	0.055	-4.8281	-0.7328	-1290.67
3492	1	Extremo 2A	27.938	248.352	0.055	-4.8281	-0.7603	-1409.4
3493	0	Extremo 1A	27.878	-224.631	0.00509	6.7864	-0.7272	-1339.99
3493	0.5	Extremo 1A	27.878	-202.833	0.00509	6.7864	-0.7297	-1233.13
3493	1	Extremo 1A	27.878	-181.036	0.00509	6.7864	-0.7323	-1137.16
3493	0	Extremo 2A	27.953	-239.513	0.074	16.5506	-0.6968	-1409.39

3493	0.5	Extremo 2A	27.953	-217.716	0.074	16.5506	-0.7339	-1295.09
3493	1	Extremo 2A	27.953	-195.918	0.074	16.5506	-0.7711	-1191.68
3494	0	Extremo 1A	27.882	-446.176	0.00685	19.1574	-0.7264	-1037.48
3494	0.5	Extremo 1A	27.882	-424.378	0.00685	19.1574	-0.7299	-819.845
3494	1	Extremo 1A	27.882	-402.581	0.00685	19.1574	-0.7333	-613.105
3494	0	Extremo 2A	27.97	-468.121	0.1	31.9035	-0.6854	-1089.71
3494	0.5	Extremo 2A	27.97	-446.323	0.1	31.9035	-0.7356	-861.101
3494	1	Extremo 2A	27.97	-424.526	0.1	31.9035	-0.7857	-643.389
3495	0	Extremo 1A	27.886	-450.489	0.00924	23.9967	-0.7254	-546.204
3495	0.5	Extremo 1A	27.886	-428.691	0.00924	23.9967	-0.73	-326.409
3495	1	Extremo 1A	27.886	-406.894	0.00924	23.9967	-0.7346	-117.513
3495	0	Extremo 2A	27.989	-474.661	0.136	38.1609	-0.67	-574.894
3495	0.5	Extremo 2A	27.989	-452.864	0.136	38.1609	-0.7377	-343.013
3495	1	Extremo 2A	27.989	-431.066	0.136	38.1609	-0.8055	-122.03
3496	0	Extremo 1A	27.891	-372.829	0.012	22.8598	-0.724	-88.0422
3496	0.5	Extremo 1A	27.891	-351.032	0.012	22.8598	-0.7302	92.923
3496	1	Extremo 1A	27.891	-329.234	0.012	22.8598	-0.7364	262.99
3496	0	Extremo 2A	28.009	-397.392	0.183	37.6441	-0.6491	-91.7782
3496	0.5	Extremo 2A	28.009	-375.595	0.183	37.6441	-0.7408	101.469
3496	1	Extremo 2A	28.009	-353.797	0.183	37.6441	-0.8325	283.817
3497	0	Extremo 1A	27.898	-276.88	0.017	18.2147	-0.7221	274.392
3497	0.5	Extremo 1A	27.898	-255.082	0.017	18.2147	-0.7305	407.383
3497	1	Extremo 1A	27.898	-233.285	0.017	18.2147	-0.7388	529.474
3497	0	Extremo 2A	28.027	-301.423	0.248	33.2356	-0.6207	295.629
3497	0.5	Extremo 2A	28.027	-279.625	0.248	33.2356	-0.745	440.891
3497	1	Extremo 2A	28.027	-257.828	0.248	33.2356	-0.8692	575.254
3498	0	Extremo 1A	27.906	-179.165	0.023	11.78	-0.7195	533.933
3498	0.5	Extremo 1A	27.906	-157.368	0.023	11.78	-0.7308	618.066
3498	1	Extremo 1A	27.906	-135.57	0.023	11.78	-0.7421	691.3
3498	0	Extremo 2A	28.04	-203.652	0.337	26.8066	-0.5822	580.029
3498	0.5	Extremo 2A	28.04	-181.854	0.337	26.8066	-0.7509	676.406
3498	1	Extremo 2A	28.04	-160.057	0.337	26.8066	-0.9195	761.884
3499	0	Extremo 1A	27.915	-82.048	0.031	4.5117	-0.716	693.039
3499	0.5	Extremo 1A	27.915	-60.25	0.031	4.5117	-0.7313	728.613
3499	1	Extremo 1A	27.915	-38.453	0.031	4.5117	-0.7466	753.289
3499	0	Extremo 2A	28.04	-106.493	0.459	19.3215	-0.5298	763.991
3499	0.5	Extremo 2A	28.04	-84.695	0.459	19.3215	-0.7594	811.788
3499	1	Extremo 2A	28.04	-62.898	0.459	19.3215	-0.9889	848.686
3500	0	Extremo 1A	27.927	14.692	0.041	-3.0511	-0.7113	753.65
3500	0.5	Extremo 1A	27.927	36.49	0.041	-3.0511	-0.7319	740.854
3500	1	Extremo 1A	27.927	58.287	0.041	-3.0511	-0.7525	717.16
3500	0	Extremo 2A	28.012	-9.701	0.628	11.2103	-0.4582	849.578
3500	0.5	Extremo 2A	28.012	12.096	0.628	11.2103	-0.772	848.979
3500	1	Extremo 2A	28.012	33.894	0.628	11.2103	-1.0858	837.482
3501	0	Extremo 1A	27.941	111.479	0.056	-10.5166	-0.705	716.41
3501	0.5	Extremo 1A	27.941	133.277	0.056	-10.5166	-0.7328	655.221
3501	1	Extremo 1A	27.941	155.074	0.056	-10.5166	-0.7606	583.133
3501	0	Extremo 2A	27.923	87.215	0.864	2.5948	-0.3599	837.555
3501	0.5	Extremo 2A	27.923	109.012	0.864	2.5948	-0.7917	788.498
3501	1	Extremo 2A	27.923	130.81	0.864	2.5948	-1.2235	728.543
3502	0	Extremo 1A	27.957	208.764	0.075	-17.4473	-0.6965	580.866
3502	0.5	Extremo 1A	27.957	230.561	0.075	-17.4473	-0.734	471.035
3502	1	Extremo 1A	27.957	252.359	0.075	-17.4473	-0.7715	350.305
3502	0	Extremo 2A	27.695	184.858	1.201	-6.6306	-0.2237	727.557
3502	0.5	Extremo 2A	27.695	206.656	1.201	-6.6306	-0.8242	629.679
3502	1	Extremo 2A	27.695	228.453	1.201	-6.6306	-1.4246	520.901
3503	0	Extremo 1A	27.975	306.788	0.101	-23.1381	-0.6849	344.885
3503	0.5	Extremo 1A	27.975	328.586	0.101	-23.1381	-0.7356	186.041
3503	1	Extremo 1A	27.975	350.383	0.101	-23.1381	-0.7863	16.299
3503	0	Extremo 2A	27.14	283.764	1.695	-16.7548	-0.0346	517.404
3503	0.5	Extremo 2A	27.14	305.561	1.695	-16.7548	-0.8822	370.073
3503	1	Extremo 2A	27.14	327.359	1.695	-16.7548	-1.7299	211.843
3504	0	Extremo 1A	27.995	402.753	0.137	-26.2396	-0.6693	2.7092
3504	0.5	Extremo 1A	27.995	424.551	0.137	-26.2396	-0.7378	-204.117
3504	1	Extremo 1A	27.995	446.348	0.137	-26.2396	-0.8064	-421.842
3504	0	Extremo 2A	25.788	382.079	2.434	-28.1211	0.2283	201.071
3504	0.5	Extremo 2A	25.788	403.876	2.434	-28.1211	-0.9887	4.5826
3504	1	Extremo 2A	25.788	425.674	2.434	-28.1211	-2.2058	-202.805
3505	0	Extremo 1A	28.016	477.14	0.185	-24.1351	-0.6482	-456.74
3505	0.5	Extremo 1A	28.016	498.937	0.185	-24.1351	-0.7409	-700.759
3505	1	Extremo 1A	28.016	520.735	0.185	-24.1351	-0.8336	-955.677
3505	0	Extremo 2A	22.431	466.666	3.452	-41.2456	0.6154	-233.396
3505	0.5	Extremo 2A	22.431	488.463	3.452	-41.2456	-1.1103	-472.179
3505	1	Extremo 2A	22.431	510.261	3.452	-41.2456	-2.8361	-721.859
3506	0	Extremo 1A	28.037	454.811	0.251	-12.42	-0.6195	-1034.69
3506	0.5	Extremo 1A	28.037	476.608	0.251	-12.42	-0.7451	-1267.54
3506	1	Extremo 1A	28.037	498.406	0.251	-12.42	-0.8707	-1511.29
3506	0	Extremo 2A	13.934	492.786	4.026	-59.5837	1.6481	-799.736
3506	0.5	Extremo 2A	13.934	514.583	4.026	-59.5837	-0.3647	-1051.58
3506	1	Extremo 2A	13.934	536.381	4.026	-59.5837	-2.3776	-1314.32
3507	0	Extremo 1A	28.052	176.292	0.341	13.672	-0.5807	-1628.8
3507	0.5	Extremo 1A	28.052	198.09	0.341	13.672	-0.7511	-1722.4
3507	1	Extremo 1A	28.052	219.887	0.341	13.672	-0.9215	-1826.89
3507	0	Extremo 2A	5.436	256.525	3.452	-56.9925	2.1067	-1438.43
3507	0.5	Extremo 2A	5.436	278.323	3.452	-56.9925	0.3809	-1572.15
3507	1	Extremo 2A	5.436	300.12	3.452	-56.9925	-1.3449	-1716.76
3508	0	Extremo 1A	28.056	-350.974	0.464	51.4367	-0.5277	-1826.55
3508	0.5	Extremo 1A	28.056	-329.177	0.464	51.4367	-0.7597	-1656.51
3508	1	Extremo 1A	28.056	-307.379	0.464	51.4367	-0.9916	-1497.37
3508	0	Extremo 2A	2.08	-275.05	2.434	-16.7957	1.4764	-1722.16
3508	0.5	Extremo 2A	2.08	-253.252	2.434	-16.7957	0.2593	-1590.08
3508	1	Extremo 2A	2.08	-231.455	2.434	-16.7957	-0.9579	-1468.9
3509	0	Extremo 1A	28.032	-629.479	0.634	77.0353	-0.4554	-1379.1
3509	0.5	Extremo 1A	28.032	-607.681	0.634	77.0353	-0.7724	-1069.81
3509	1	Extremo 1A	28.032	-585.884	0.634	77.0353	-1.0895	-771.419
3509	0	Extremo 2A	0.728	-560.327	1.696	12.0397	1.0006	-1351.47
3509	0.5	Extremo 2A	0.728	-538.53	1.696	12.0397	0.1527	-1076.76
3509	1	Extremo 2A	0.728	-516.732	1.696	12.0397	-0.6951	-812.94
3510	0	Extremo 1A	27.947	-651.73	0.872	87.5225	-0.356	-691.401
3510	0.5	Extremo 1A	27.947	-629.933	0.872	87.5225	-0.7922	-370.985
3510	1	Extremo 1A	27.947	-608.135	0.872	87.5225	-1.2284	-61.4683
3510	0	Extremo 2A	0.174	-584.727	1.201	24.3612	0.6954	-733.785
3510	0.5	Extremo 2A	0.174	-562.93	1.201	24.3612	0.0947	-446.871
3510	1	Extremo 2A	0.174	-541.132	1.201	24.3612	-0.506	-170.856
3511	0	Extremo 1A	27.725	-577.07	1.213	87.0848	-0.2185	-25.1113
3511	0.5	Extremo 1A	27.725	-555.273	1.213	87.0848	-0.8249	257.974
3511	1	Extremo 1A	27.725	-533.475	1.213	87.0848	-1.4312	530.161
3511	0	Extremo 2A	-0.054	-510.512	0.864	26.3554	0.4944	-136.225
3511	0.5	Extremo 2A	-0.054	-488.714	0.864	26.3554	0.0622	113.582
3511	1	Extremo 2A	-0.054	-466.917	0.864	26.3554	-0.37	352.49
3512	0	Extremo 1A	27.178	-480.357	1.711	79.0084	-0.0276	545.903
3512	0.5	Extremo 1A	27.178	-458.559	1.711	79.0084	-0.8832	780.632
3512	1	Extremo 1A	27.178	-436.762	1.711	79.0084	-1.7388	1004.46
3512	0	Extremo 2A	-0.142	-414.39	0.629	23.0828	0.3568	365.691
3512	0.5	Extremo 2A	-0.142	-392.593	0.629	23.0828	0.0425	567.436
3512	1	Extremo 2A	-0.142	-370.795	0.629	23.0828	-0.2718	758.283
3513	0	Extremo 1A	25.836	-380.087	2.456	63.9159	0.2377	1013.12
3513	0.5	Extremo 1A	25.836	-358.29	2.456	63.9159	-0.99	1197.71
3513	1	Extremo 1A	25.836	-336.492	2.456	63.9159	-2.2178	1371.41
3513	0	Extremo 2A	-0.169	-316.252	0.461	17.2791	0.2601	763.336
3513	0.5	Extremo 2A	-0.169	-294.455	0.461	17.2791	0.0299	916.012
3513	1	Extremo 2A	-0.169	-272.657	0.461	17.2791	-0.2004	1057.79
3514	0	Extremo 1A	22.491	-272.175	3.48	39.2853	0.6281	1378.9
3514	0.5	Extremo 1A	22.491	-250.378	3.48	39.2853	-1.1121	1509.54
3514	1	Extremo 1A	22.491	-228.58	3.48	39.2853	-2.8523	1629.28
3514	0	Extremo 2A	-0.167	-218.922	0.339	10.2739	0.1909	1059.71
3514	0.5	Extremo 2A	-0.167	-197.125	0.339	10.2739	0.0213	1163.72
3514	1	Extremo 2A	-0.167	-175.327	0.339	10.2739	-0.1483	1256.83
3515	0	Extremo 1A	14.008	-124.122	4.065	-3.8307	1.6653	1633.06
3515	0.5	Extremo 1A	14.008	-102.324	4.065	-3.8307	-0.3671	1689.67
3515	1	Extremo 1A	14.008	-80.527	4.065	-3.8307	-2.3994	1735.39
3515	0	Extremo 2A	-0.152	-122.134	0.251	2.7371	0.1409	1257.17
3515	0.5	Extremo 2A	-0.152	-100.337	0.251	2.7371	0.0154	1312.79
3515	1	Extremo 2A	-0.152	-78.539	0.251	2.7371	-0.1102	1357.51
3516	0	Extremo 1A	5.527	23.885	3.504	-47.0344	2.1298	1730.92
3516	0.5	Extremo 1A	5.527	45.683	3.504	-47.0344	0.3777	1713.53
3516	1	Extremo 1A	5.527	67.48	3.504	-47.0344	-1.3744	1685.24
3516	0	Extremo 2A	-0.131	-25.445	0.187	-4.9262	0.1046	1356.54
3516	0.5	Extremo 2A	-0.131	-3.648	0.187	-4.9262	0.0111	1363.81
3516	1	Extremo 2A	-0.131	18.15	0.187	-4.9262	-0.0824	1360.19
3517	0	Extremo 1A	2.191	131.423	2.505	-71.9509	1.5076	1676.66
3517	0.5	Extremo 1A	2.191	153.22	2.505	-71.9509	0.255	1605.5
3517	1	Extremo 1A	2.191	175.018	2.505	-71.9509	-0.9976	1523.44
3517	0	Extremo 2A	-0.109	71.355	0.14	-12.3597	0.0782	1357.33

3517	0.5	Extremo 2A	-0.109	93.153	0.14	-12.3597	0.008	1316.21
3517	1	Extremo 2A	-0.109	114.95	0.14	-12.3597	-0.0622	1264.18
3518	0	Extremo 1A	0.863	229.526	1.792	-87.5801	1.0428	1512.54
3518	0.5	Extremo 1A	0.863	251.323	1.792	-87.5801	0.147	1392.33
3518	1	Extremo 1A	0.863	273.121	1.792	-87.5801	-0.7488	1261.22
3518	0	Extremo 2A	-0.086	167.183	0.107	-19.0749	0.0591	1257.34
3518	0.5	Extremo 2A	-0.086	188.981	0.107	-19.0749	0.0057	1168.3
3518	1	Extremo 2A	-0.086	210.778	0.107	-19.0749	-0.0477	1068.36
3519	0	Extremo 1A	0.335	316.536	1.332	-96.4484	0.7524	1241.05
3519	0.5	Extremo 1A	0.335	338.334	1.332	-96.4484	0.0865	1077.33
3519	1	Extremo 1A	0.335	360.131	1.332	-96.4484	-0.5795	902.719
3519	0	Extremo 2A	-0.064	254.31	0.083	-24.2474	0.0455	1052.06
3519	0.5	Extremo 2A	-0.064	276.107	0.083	-24.2474	0.004	919.457
3519	1	Extremo 2A	-0.064	297.905	0.083	-24.2474	-0.0376	775.954
3520	0	Extremo 1A	0.132	360.601	1.044	-97.6969	0.569	862.35
3520	0.5	Extremo 1A	0.132	382.398	1.044	-97.6969	0.047	676.601
3520	1	Extremo 1A	0.132	404.196	1.044	-97.6969	-0.4751	479.952
3520	0	Extremo 2A	-0.043	302.878	0.067	-26.6258	0.0359	740.559
3520	0.5	Extremo 2A	-0.043	324.675	0.067	-26.6258	0.0023	583.671
3520	1	Extremo 2A	-0.043	346.473	0.067	-26.6258	-0.0313	415.884
3521	0	Extremo 1A	0.061	291.161	0.87	-87.3866	0.4382	420.153
3521	0.5	Extremo 1A	0.061	312.959	0.87	-87.3866	0.0032	269.123
3521	1	Extremo 1A	0.061	334.756	0.87	-87.3866	-0.4319	107.194
3521	0	Extremo 2A	-0.025	248.387	0.057	-24.987	0.0283	362.143
3521	0.5	Extremo 2A	-0.025	270.184	0.057	-24.987	-0.00016	232.5
3521	1	Extremo 2A	-0.025	291.982	0.057	-24.987	-0.0287	91.9585
3522	0	Extremo 1A	0.03	103.772	0.696	-60.407	0.2798	92.8241
3522	0.5	Extremo 1A	0.03	125.57	0.696	-60.407	-0.0683	35.4886
3522	1	Extremo 1A	0.03	147.367	0.696	-60.407	-0.4163	-32.7457
3522	0	Extremo 2A	-0.00959	86.425	0.046	-18.7292	0.0183	78.8659
3522	0.5	Extremo 2A	-0.00959	108.222	0.046	-18.7292	-0.0047	30.2042
3522	1	Extremo 2A	-0.00959	130.02	0.046	-18.7292	-0.0277	-29.3561
3523	0	Extremo 1A	2.354	-12.791	-1.517	23.3667	-1.2645	-10.7428
3523	0.5	Extremo 1A	2.354	9.007	-1.517	23.3667	-0.506	-9.7969
3523	1	Extremo 1A	2.354	30.804	-1.517	23.3667	0.2525	-19.7497
3523	0	Extremo 2A	2.354	-12.791	-1.517	23.3667	-1.2645	-10.7428
3523	0.5	Extremo 2A	2.354	9.007	-1.517	23.3667	-0.506	-9.7969
3523	1	Extremo 2A	2.354	30.804	-1.517	23.3667	0.2525	-19.7497
3524	0	Extremo 1A	5.45	-179.435	-2.192	-21.5923	-1.7002	-13.8249
3524	0.5	Extremo 1A	5.45	-157.637	-2.192	-21.5923	-0.604	70.4432
3524	1	Extremo 1A	5.45	-135.84	-2.192	-21.5923	0.4921	143.813
3524	0	Extremo 2A	5.45	-179.435	-2.192	-21.5924	-1.7002	-13.8248
3524	0.5	Extremo 2A	5.45	-157.637	-2.192	-21.5924	-0.604	70.4432
3524	1	Extremo 2A	5.45	-135.84	-2.192	-21.5924	0.4921	143.813
3525	0	Extremo 1A	8.586	-140.537	-2.233	-13.1281	-1.7569	164.285
3525	0.5	Extremo 1A	8.586	-118.739	-2.233	-13.1281	-0.6402	229.104
3525	1	Extremo 1A	8.586	-96.942	-2.233	-13.1281	0.4764	283.025
3525	0	Extremo 2A	8.586	-140.537	-2.233	-13.1281	-1.7569	164.285
3525	0.5	Extremo 2A	8.586	-118.74	-2.233	-13.1281	-0.6402	229.105
3525	1	Extremo 2A	8.586	-96.942	-2.233	-13.1281	0.4764	283.025
3526	0	Extremo 1A	11.302	-55.549	-1.978	-4.2227	-1.666	292.215
3526	0.5	Extremo 1A	11.302	-33.752	-1.978	-4.2227	-0.6769	314.54
3526	1	Extremo 1A	11.302	-11.954	-1.978	-4.2227	0.3121	325.967
3526	0	Extremo 2A	11.302	-55.549	-1.978	-4.2227	-1.666	292.215
3526	0.5	Extremo 2A	11.302	-33.752	-1.978	-4.2227	-0.6769	314.54
3526	1	Extremo 2A	11.302	-11.954	-1.978	-4.2227	0.3121	325.967
3527	0	Extremo 1A	13.46	36.571	-1.656	-1.569	-1.5388	329.639
3527	0.5	Extremo 1A	13.46	58.369	-1.656	-1.569	-0.711	305.904
3527	1	Extremo 1A	13.46	80.166	-1.656	-1.569	0.1169	271.271
3527	0	Extremo 2A	13.46	36.571	-1.656	-1.569	-1.5388	329.639
3527	0.5	Extremo 2A	13.46	58.369	-1.656	-1.569	-0.711	305.904
3527	1	Extremo 2A	13.46	80.166	-1.656	-1.569	0.1169	271.271
3528	0	Extremo 1A	15.095	129.779	-1.348	-0.975	-1.4078	271.187
3528	0.5	Extremo 1A	15.095	151.577	-1.348	-0.975	-0.7335	200.848
3528	1	Extremo 1A	15.095	173.374	-1.348	-0.975	-0.0593	119.611
3528	0	Extremo 2A	15.095	129.779	-1.348	-0.975	-1.4078	271.188
3528	0.5	Extremo 2A	15.095	151.577	-1.348	-0.975	-0.7335	200.849
3528	1	Extremo 2A	15.095	173.374	-1.348	-0.975	-0.0593	119.611
3529	0	Extremo 1A	16.294	222.122	-1.079	3.3668	-1.2847	115.674
3529	0.5	Extremo 1A	16.294	243.919	-1.079	3.3668	-0.745	-0.8361
3529	1	Extremo 1A	16.294	265.717	-1.079	3.3668	-0.2052	-128.245
3529	0	Extremo 2A	16.294	222.121	-1.079	3.3668	-1.2847	115.674
3529	0.5	Extremo 2A	16.294	243.919	-1.079	3.3668	-0.745	-0.8357
3529	1	Extremo 2A	16.294	265.716	-1.079	3.3668	-0.2052	-128.245
3530	0	Extremo 1A	17.156	310.791	-0.853	19.6758	-1.1758	-137.306
3530	0.5	Extremo 1A	17.156	332.589	-0.853	19.6758	-0.749	-298.151
3530	1	Extremo 1A	17.156	354.386	-0.853	19.6758	-0.3223	-469.895
3530	0	Extremo 2A	17.156	310.791	-0.853	19.6758	-1.1758	-137.306
3530	0.5	Extremo 2A	17.156	332.589	-0.853	19.6758	-0.749	-298.151
3530	1	Extremo 2A	17.156	354.386	-0.853	19.6758	-0.3223	-469.894
3531	0	Extremo 1A	17.766	378.722	-0.669	56.0795	-1.0835	-490.532
3531	0.5	Extremo 1A	17.766	400.52	-0.669	56.0795	-0.7491	-685.342
3531	1	Extremo 1A	17.766	422.317	-0.669	56.0795	-0.4147	-891.051
3531	0	Extremo 2A	17.766	378.722	-0.669	56.0795	-1.0835	-490.531
3531	0.5	Extremo 2A	17.766	400.52	-0.669	56.0795	-0.7491	-685.342
3531	1	Extremo 2A	17.766	422.317	-0.669	56.0795	-0.4147	-891.051
3532	0	Extremo 1A	18.193	299.989	-0.521	86.5027	-1.0076	-942.877
3532	0.5	Extremo 1A	18.193	321.786	-0.521	86.5027	-0.7473	-1098.32
3532	1	Extremo 1A	18.193	343.584	-0.521	86.5027	-0.487	-1264.66
3532	0	Extremo 2A	18.193	299.989	-0.521	86.5027	-1.0076	-942.877
3532	0.5	Extremo 2A	18.193	321.786	-0.521	86.5027	-0.7473	-1098.32
3532	1	Extremo 2A	18.193	343.584	-0.521	86.5027	-0.487	-1264.66
3533	0	Extremo 1A	18.49	-448.76	-0.403	-69.0876	-0.9464	-1264.22
3533	0.5	Extremo 1A	18.49	-426.963	-0.403	-69.0876	-0.7448	-1045.29
3533	1	Extremo 1A	18.49	-405.165	-0.403	-69.0876	-0.5432	-837.255
3533	0	Extremo 2A	18.49	-448.76	-0.403	-69.0876	-0.9464	-1264.22
3533	0.5	Extremo 2A	18.49	-426.963	-0.403	-69.0876	-0.7448	-1045.29
3533	1	Extremo 2A	18.49	-405.165	-0.403	-69.0876	-0.5432	-837.255
3534	0	Extremo 1A	18.694	-527.408	-0.311	-38.8541	-0.8978	-784.476
3534	0.5	Extremo 1A	18.694	-505.611	-0.311	-38.8541	-0.7423	-526.221
3534	1	Extremo 1A	18.694	-483.813	-0.311	-38.8541	-0.5867	-278.865
3534	0	Extremo 2A	18.694	-527.408	-0.311	-38.8541	-0.8978	-784.476
3534	0.5	Extremo 2A	18.694	-505.611	-0.311	-38.8541	-0.7423	-526.221
3534	1	Extremo 2A	18.694	-483.813	-0.311	-38.8541	-0.5867	-278.865
3535	0	Extremo 1A	18.834	-459.284	-0.239	-2.9062	-0.8597	-257.071
3535	0.5	Extremo 1A	18.834	-437.487	-0.239	-2.9062	-0.7399	-32.8785
3535	1	Extremo 1A	18.834	-415.689	-0.239	-2.9062	-0.6202	180.415
3535	0	Extremo 2A	18.834	-459.284	-0.239	-2.9062	-0.8597	-257.071
3535	0.5	Extremo 2A	18.834	-437.486	-0.239	-2.9062	-0.7399	-32.8783
3535	1	Extremo 2A	18.834	-415.689	-0.239	-2.9062	-0.6202	180.416
3536	0	Extremo 1A	18.929	-370.244	-0.184	12.4747	-0.8299	191.041
3536	0.5	Extremo 1A	18.929	-348.446	-0.184	12.4747	-0.7379	370.714
3536	1	Extremo 1A	18.929	-326.649	-0.184	12.4747	-0.6459	539.487
3536	0	Extremo 2A	18.929	-370.244	-0.184	12.4747	-0.8299	191.041
3536	0.5	Extremo 2A	18.929	-348.446	-0.184	12.4747	-0.7379	370.714
3536	1	Extremo 2A	18.929	-326.649	-0.184	12.4747	-0.6459	539.487
3537	0	Extremo 1A	18.994	-277.167	-0.141	14.9234	-0.8067	545.708
3537	0.5	Extremo 1A	18.994	-255.37	-0.141	14.9234	-0.7362	678.842
3537	1	Extremo 1A	18.994	-233.572	-0.141	14.9234	-0.6656	801.078
3537	0	Extremo 2A	18.994	-277.167	-0.141	14.9234	-0.8067	545.708
3537	0.5	Extremo 2A	18.994	-255.369	-0.141	14.9234	-0.7362	678.842
3537	1	Extremo 2A	18.994	-233.572	-0.141	14.9234	-0.6656	801.078
3538	0	Extremo 1A	19.037	-182.451	-0.108	11.5138	-0.7888	804.627
3538	0.5	Extremo 1A	19.037	-160.653	-0.108	11.5138	-0.7348	890.403
3538	1	Extremo 1A	19.037	-138.856	-0.108	11.5138	-0.6807	965.28
3538	0	Extremo 2A	19.037	-182.45	-0.108	11.5138	-0.7888	804.627
3538	0.5	Extremo 2A	19.037	-160.653	-0.108	11.5138	-0.7348	890.403
3538	1	Extremo 2A	19.037	-138.855	-0.108	11.5138	-0.6807	965.28
3539	0	Extremo 1A	19.066	-87.064	-0.083	5.719	-0.775	967.021
3539	0.5	Extremo 1A	19.066	-65.266	-0.083	5.719	-0.7336	1005.1
3539	1	Extremo 1A	19.066	-43.469	-0.083	5.719	-0.6922	1032.29
3539	0	Extremo 2A	19.066	-87.064	-0.083	5.719	-0.775	967.021
3539	0.5	Extremo 2A	19.066	-65.266	-0.083	5.719	-0.7336	1005.1
3539	1	Extremo 2A	19.066	-43.469	-0.083	5.719	-0.6922	1032.29
3540	0	Extremo 1A	19.085	8.524	-0.063	-0.8901	-0.7644	1032.7
3540	0.5	Extremo 1A	19.085	30.322	-0.063	-0.8901	-0.7327	1022.99
3540	1	Extremo 1A	19.085	52.119	-0.063	-0.8901	-0.7011	1002.38
3540	0	Extremo 2A	19.085	8.524	-0.063	-0.8901	-0.7644	1032.7
3540	0.5	Extremo 2A	19.085	30.322	-0.063	-0.8901	-0.7327	1022.99
3540	1	Extremo 2A	19.085	52.119	-0.063	-0.8901	-0.7011	1002.38
3541	0	Extremo 1A	19.098	104.083	-0.048	-7.4093	-0.7562	1001.6
3541	0.5	Extremo 1A	19.098	125.881	-0.048	-7.4093	-0.732	944.105
3541	1	Extremo 1A	19.098	147.678	-0.048	-7.4093	-0.7078	875.715
3541	0	Extremo 2A	19.098	104.083	-0.048	-7.4093	-0.7562	1001.59

3541	0.5	Extremo 2A	19.098	125.881	-0.048	-7.4093	-0.732	944.104
3541	1	Extremo 2A	19.098	147.678	-0.048	-7.4093	-0.7078	875.714
3542	0	Extremo 1A	19.106	199.364	-0.037	-12.8782	-0.75	873.51
3542	0.5	Extremo 1A	19.106	221.162	-0.037	-12.8782	-0.7314	768.379
3542	1	Extremo 1A	19.106	242.959	-0.037	-12.8782	-0.7129	652.348
3542	0	Extremo 2A	19.106	199.364	-0.037	-12.8782	-0.75	873.509
3542	0.5	Extremo 2A	19.106	221.162	-0.037	-12.8782	-0.7314	768.378
3542	1	Extremo 2A	19.106	242.959	-0.037	-12.8782	-0.7129	652.347
3543	0	Extremo 1A	19.11	293.824	-0.028	-15.5086	-0.7452	648.122
3543	0.5	Extremo 1A	19.11	315.622	-0.028	-15.5086	-0.731	495.76
3543	1	Extremo 1A	19.11	337.419	-0.028	-15.5086	-0.7168	332.5
3543	0	Extremo 2A	19.11	293.824	-0.028	-15.5086	-0.7452	648.121
3543	0.5	Extremo 2A	19.11	315.622	-0.028	-15.5086	-0.731	495.759
3543	1	Extremo 2A	19.11	337.419	-0.028	-15.5086	-0.7168	332.499
3544	0	Extremo 1A	19.113	386.317	-0.022	-11.2726	-0.7415	325.217
3544	0.5	Extremo 1A	19.113	408.115	-0.022	-11.2726	-0.7307	126.609
3544	1	Extremo 1A	19.113	429.912	-0.022	-11.2726	-0.7198	-82.8976
3544	0	Extremo 2A	19.113	386.317	-0.022	-11.2726	-0.7415	325.216
3544	0.5	Extremo 2A	19.113	408.115	-0.022	-11.2726	-0.7307	126.608
3544	1	Extremo 2A	19.113	429.912	-0.022	-11.2726	-0.7198	-82.8989
3545	0	Extremo 1A	19.115	474.008	-0.017	8.0623	-0.7387	-95.2676
3545	0.5	Extremo 1A	19.115	495.805	-0.017	8.0623	-0.7304	-337.721
3545	1	Extremo 1A	19.115	517.603	-0.017	8.0623	-0.7221	-591.073
3545	0	Extremo 2A	19.115	474.008	-0.017	8.0623	-0.7387	-95.269
3545	0.5	Extremo 2A	19.115	495.806	-0.017	8.0623	-0.7304	-337.722
3545	1	Extremo 2A	19.115	517.603	-0.017	8.0623	-0.7221	-591.075
3546	0	Extremo 1A	19.115	537.268	-0.013	51.4138	-0.7365	-616.341
3546	0.5	Extremo 1A	19.115	559.066	-0.013	51.4138	-0.7302	-890.425
3546	1	Extremo 1A	19.115	580.863	-0.013	51.4138	-0.7238	-1175.41
3546	0	Extremo 2A	19.115	537.268	-0.013	51.4139	-0.7365	-616.343
3546	0.5	Extremo 2A	19.115	559.066	-0.013	51.4139	-0.7302	-890.426
3546	1	Extremo 2A	19.115	580.863	-0.013	51.4139	-0.7238	-1175.41
3547	0	Extremo 1A	19.116	430.461	-0.00971	88.433	-0.7349	-1236.37
3547	0.5	Extremo 1A	19.116	452.258	-0.00971	88.433	-0.73	-1457.05
3547	1	Extremo 1A	19.116	474.056	-0.00971	88.433	-0.7252	-1688.63
3547	0	Extremo 2A	19.116	430.461	-0.00971	88.4331	-0.7349	-1236.38
3547	0.5	Extremo 2A	19.116	452.258	-0.00971	88.4331	-0.73	-1457.06
3547	1	Extremo 2A	19.116	474.056	-0.00971	88.4331	-0.7252	-1688.63
3548	0	Extremo 1A	19.115	-451.639	-0.00744	-89.4193	-0.7336	-1688.65
3548	0.5	Extremo 1A	19.115	-429.841	-0.00744	-89.4193	-0.7299	-1468.28
3548	1	Extremo 1A	19.115	-408.044	-0.00744	-89.4193	-0.7262	-1258.81
3548	0	Extremo 2A	19.115	-451.639	-0.00744	-89.4193	-0.7336	-1688.65
3548	0.5	Extremo 2A	19.115	-429.842	-0.00744	-89.4193	-0.7299	-1468.28
3548	1	Extremo 2A	19.115	-408.044	-0.00744	-89.4193	-0.7262	-1258.81
3549	0	Extremo 1A	19.115	-558.447	-0.0057	-52.3983	-0.7326	-1197.88
3549	0.5	Extremo 1A	19.115	-536.65	-0.0057	-52.3983	-0.7298	-924.104
3549	1	Extremo 1A	19.115	-514.852	-0.0057	-52.3983	-0.7269	-661.228
3549	0	Extremo 2A	19.115	-558.448	-0.0057	-52.3984	-0.7326	-1197.88
3549	0.5	Extremo 2A	19.115	-536.65	-0.0057	-52.3984	-0.7298	-924.105
3549	1	Extremo 2A	19.115	-514.853	-0.0057	-52.3984	-0.7269	-661.229
3550	0	Extremo 1A	19.115	-495.19	-0.00437	-9.0429	-0.7319	-635.999
3550	0.5	Extremo 1A	19.115	-473.392	-0.00437	-9.0429	-0.7297	-393.853
3550	1	Extremo 1A	19.115	-451.595	-0.00437	-9.0429	-0.7275	-162.607
3550	0	Extremo 2A	19.115	-495.19	-0.00437	-9.0429	-0.7319	-635.999
3550	0.5	Extremo 2A	19.115	-473.393	-0.00437	-9.0429	-0.7297	-393.854
3550	1	Extremo 2A	19.115	-451.595	-0.00437	-9.0429	-0.7275	-162.607
3551	0	Extremo 1A	19.114	-407.504	-0.00335	10.2995	-0.7313	-150.279
3551	0.5	Extremo 1A	19.114	-385.706	-0.00335	10.2995	-0.7296	48.0232
3551	1	Extremo 1A	19.114	-363.909	-0.00335	10.2995	-0.728	235.427
3551	0	Extremo 2A	19.114	-407.504	-0.00335	10.2995	-0.7313	-150.279
3551	0.5	Extremo 2A	19.114	-385.707	-0.00335	10.2995	-0.7296	48.0234
3551	1	Extremo 2A	19.114	-363.909	-0.00335	10.2995	-0.728	235.428
3552	0	Extremo 1A	19.114	-315.019	-0.00257	14.5488	-0.7309	242.66
3552	0.5	Extremo 1A	19.114	-293.222	-0.00257	14.5488	-0.7296	394.72
3552	1	Extremo 1A	19.114	-271.424	-0.00257	14.5488	-0.7283	535.882
3552	0	Extremo 2A	19.114	-315.02	-0.00257	14.5488	-0.7309	242.66
3552	0.5	Extremo 2A	19.114	-293.223	-0.00257	14.5488	-0.7296	394.721
3552	1	Extremo 2A	19.114	-271.425	-0.00257	14.5488	-0.7283	535.883
3553	0	Extremo 1A	19.114	-220.574	-0.00197	11.9424	-0.7306	540.046
3553	0.5	Extremo 1A	19.114	-198.776	-0.00197	11.9424	-0.7296	644.883
3553	1	Extremo 1A	19.114	-176.979	-0.00197	11.9424	-0.7286	738.822
3553	0	Extremo 2A	19.114	-220.575	-0.00197	11.9424	-0.7306	540.047
3553	0.5	Extremo 2A	19.114	-198.777	-0.00197	11.9424	-0.7296	644.885
3553	1	Extremo 2A	19.114	-176.98	-0.00197	11.9424	-0.7286	738.824
3554	0	Extremo 1A	19.113	-125.317	-0.00151	6.5169	-0.7303	740.943
3554	0.5	Extremo 1A	19.113	-103.519	-0.00151	6.5169	-0.7295	798.152
3554	1	Extremo 1A	19.113	-81.722	-0.00151	6.5169	-0.7288	844.463
3554	0	Extremo 2A	19.113	-125.317	-0.00151	6.5169	-0.7303	740.945
3554	0.5	Extremo 2A	19.113	-103.52	-0.00151	6.5169	-0.7295	798.154
3554	1	Extremo 2A	19.113	-81.722	-0.00151	6.5169	-0.7288	844.465
3555	0	Extremo 1A	19.113	-29.797	-0.00116	0.0782	-0.7301	845.128
3555	0.5	Extremo 1A	19.113	-8	-0.00116	0.0782	-0.7295	854.578
3555	1	Extremo 1A	19.113	13.798	-0.00116	0.0782	-0.7289	853.128
3555	0	Extremo 2A	19.113	-29.798	-0.00116	0.0782	-0.7301	845.131
3555	0.5	Extremo 2A	19.113	-8	-0.00116	0.0782	-0.7295	854.58
3555	1	Extremo 2A	19.113	13.797	-0.00116	0.0782	-0.7289	853.131
3556	0	Extremo 1A	19.113	65.724	-0.00089	-6.3763	-0.7299	852.531
3556	0.5	Extremo 1A	19.113	87.522	-0.00089	-6.3763	-0.7295	814.22
3556	1	Extremo 1A	19.113	109.319	-0.00089	-6.3763	-0.7291	765.01
3556	0	Extremo 2A	19.113	65.724	-0.00089	-6.3763	-0.7299	852.534
3556	0.5	Extremo 2A	19.113	87.521	-0.00089	-6.3763	-0.7295	814.223
3556	1	Extremo 2A	19.113	109.319	-0.00089	-6.3763	-0.7291	765.013
3557	0	Extremo 1A	19.113	160.99	-0.00069	-11.86	-0.7298	762.973
3557	0.5	Extremo 1A	19.113	182.787	-0.00069	-11.86	-0.7295	677.029
3557	1	Extremo 1A	19.113	204.585	-0.00069	-11.86	-0.7291	580.186
3557	0	Extremo 2A	19.113	160.989	-0.00069	-11.86	-0.7298	762.976
3557	0.5	Extremo 2A	19.113	182.787	-0.00069	-11.86	-0.7295	677.032
3557	1	Extremo 2A	19.113	204.584	-0.00069	-11.86	-0.7291	580.19
3558	0	Extremo 1A	19.112	255.458	-0.00053	-14.6095	-0.7297	576.142
3558	0.5	Extremo 1A	19.112	277.256	-0.00053	-14.6095	-0.7295	442.963
3558	1	Extremo 1A	19.112	299.053	-0.00053	-14.6095	-0.7292	298.886
3558	0	Extremo 2A	19.112	255.458	-0.00053	-14.6096	-0.7297	576.146
3558	0.5	Extremo 2A	19.112	277.255	-0.00053	-14.6096	-0.7295	442.968
3558	1	Extremo 2A	19.112	299.053	-0.00053	-14.6096	-0.7292	298.891
3559	0	Extremo 1A	19.112	347.998	-0.00041	-10.7014	-0.7297	291.837
3559	0.5	Extremo 1A	19.112	369.795	-0.00041	-10.7014	-0.7295	112.388
3559	1	Extremo 1A	19.112	391.593	-0.00041	-10.7014	-0.7293	-77.9586
3559	0	Extremo 2A	19.112	347.997	-0.00041	-10.7015	-0.7297	291.841
3559	0.5	Extremo 2A	19.112	369.795	-0.00041	-10.7015	-0.7295	112.393
3559	1	Extremo 2A	19.112	391.592	-0.00041	-10.7015	-0.7293	-77.9535
3560	0	Extremo 1A	19.112	435.824	-0.00031	7.8603	-0.7296	-89.9817
3560	0.5	Extremo 1A	19.112	457.621	-0.00031	7.8603	-0.7295	-313.343
3560	1	Extremo 1A	19.112	479.419	-0.00031	7.8603	-0.7293	-547.603
3560	0	Extremo 2A	19.112	435.823	-0.00031	7.8602	-0.7296	-89.9767
3560	0.5	Extremo 2A	19.112	457.621	-0.00031	7.8602	-0.7295	-313.338
3560	1	Extremo 2A	19.112	479.418	-0.00031	7.8602	-0.7293	-547.597
3561	0	Extremo 1A	19.112	499.918	-0.00024	49.7519	-0.7296	-572.133
3561	0.5	Extremo 1A	19.112	521.715	-0.00024	49.7519	-0.7295	-827.542
3561	1	Extremo 1A	19.112	543.513	-0.00024	49.7519	-0.7293	-1093.85
3561	0	Extremo 2A	19.112	499.917	-0.00024	49.7518	-0.7296	-572.128
3561	0.5	Extremo 2A	19.112	521.715	-0.00024	49.7518	-0.7295	-827.536
3561	1	Extremo 2A	19.112	543.512	-0.00024	49.7518	-0.7293	-1093.84
3562	0	Extremo 1A	19.112	399.649	-0.00019	85.7247	-0.7296	-1152.83
3562	0.5	Extremo 1A	19.112	421.447	-0.00019	85.7247	-0.7295	-1358.11
3562	1	Extremo 1A	19.112	443.244	-0.00019	85.7247	-0.7294	-1574.28
3562	0	Extremo 2A	19.112	399.649	-0.00019	85.7245	-0.7296	-1152.83
3562	0.5	Extremo 2A	19.112	421.447	-0.00019	85.7245	-0.7295	-1358.1
3562	1	Extremo 2A	19.112	443.244	-0.00019	85.7245	-0.7294	-1574.27
3563	0	Extremo 1A	19.112	-449.152	-0.00014	-85.6303	-0.7295	-1574.28
3563	0.5	Extremo 1A	19.112	-427.354	-0.00014	-85.6303	-0.7295	-1355.15
3563	1	Extremo 1A	19.112	-405.557	-0.00014	-85.6303	-0.7294	-1146.92
3563	0	Extremo 2A	19.112	-449.15	-0.00014	-85.6301	-0.7295	-1574.27
3563	0.5	Extremo 2A	19.112	-427.352	-0.00014	-85.6301	-0.7295	-1355.14
3563	1	Extremo 2A	19.112	-405.555	-0.00014	-85.6301	-0.7294	-1146.92
3564	0	Extremo 1A	19.112	-549.42	-0.00011	-49.6579	-0.7295	-1087.93
3564	0.5	Extremo 1A	19.112	-527.622	-0.00011	-49.6579	-0.7295	-818.671
3564	1	Extremo 1A	19.112	-505.825	-0.00011	-49.6579	-0.7294	-560.31
3564	0	Extremo 2A	19.112	-549.417	-0.00011	-49.6578	-0.7295	-1087.93
3564	0.5	Extremo 2A	19.112	-527.62	-0.00011	-49.6578	-0.7295	-818.668
3564	1	Extremo 2A	19.112	-505.822	-0.00011	-49.6578	-0.7294	-560.307
3565	0	Extremo 1A	19.112	-485.325	-8.6E-05	-7.7671	-0.7295	-535.772
3565	0.5	Extremo 1A	19.112	-463.528	-8.6E-05	-7.7671	-0.7295	-298.559
3565	1	Extremo 1A	19.112	-441.73	-8.6E-05	-7.7671	-0.7294	-72.2447
3565	0	Extremo 2A	19.112	-485.323	-8.6E-05	-7.767	-0.7295	-535.77

3565	0.5	Extremo 2A	19.112	-463.526	-8.6E-05	-7.767	-0.7295	-298.558
3565	1	Extremo 2A	19.112	-441.728	-8.6E-05	-7.767	-0.7294	-72.2444
3566	0	Extremo 1A	19.112	-397.498	-6.7E-05	10.7932	-0.7295	-60.2138
3566	0.5	Extremo 1A	19.112	-375.701	-6.7E-05	10.7932	-0.7294	133.086
3566	1	Extremo 1A	19.112	-353.903	-6.7E-05	10.7932	-0.7294	315.487
3566	0	Extremo 2A	19.112	-397.496	-6.7E-05	10.7933	-0.7295	-60.2135
3566	0.5	Extremo 2A	19.112	-375.699	-6.7E-05	10.7933	-0.7294	133.085
3566	1	Extremo 2A	19.112	-353.901	-6.7E-05	10.7933	-0.7294	315.485
3567	0	Extremo 1A	19.112	-304.958	-5.2E-05	14.6989	-0.7295	322.546
3567	0.5	Extremo 1A	19.112	-283.16	-5.2E-05	14.6989	-0.7294	469.575
3567	1	Extremo 1A	19.112	-261.363	-5.2E-05	14.6989	-0.7294	605.706
3567	0	Extremo 2A	19.112	-304.955	-5.2E-05	14.6989	-0.7295	322.544
3567	0.5	Extremo 2A	19.112	-283.158	-5.2E-05	14.6989	-0.7294	469.572
3567	1	Extremo 2A	19.112	-261.36	-5.2E-05	14.6989	-0.7294	605.702
3568	0	Extremo 1A	19.112	-210.487	-4E-05	11.9451	-0.7295	609.761
3568	0.5	Extremo 1A	19.112	-188.69	-4E-05	11.9451	-0.7294	709.555
3568	1	Extremo 1A	19.112	-166.892	-4E-05	11.9451	-0.7294	798.451
3568	0	Extremo 2A	19.112	-210.485	-4E-05	11.9451	-0.7295	609.757
3568	0.5	Extremo 2A	19.112	-188.687	-4E-05	11.9451	-0.7294	709.55
3568	1	Extremo 2A	19.112	-166.89	-4E-05	11.9451	-0.7294	798.445
3569	0	Extremo 1A	19.112	-115.219	-3.1E-05	6.454	-0.7295	800.502
3569	0.5	Extremo 1A	19.112	-93.421	-3.1E-05	6.454	-0.7294	852.662
3569	1	Extremo 1A	19.112	-71.624	-3.1E-05	6.454	-0.7294	893.923
3569	0	Extremo 2A	19.112	-115.216	-3.1E-05	6.454	-0.7295	800.496
3569	0.5	Extremo 2A	19.112	-93.419	-3.1E-05	6.454	-0.7294	852.655
3569	1	Extremo 2A	19.112	-71.621	-3.1E-05	6.454	-0.7294	893.915
3570	0	Extremo 1A	19.112	-19.693	-2.4E-05	-0.0139	-0.7295	894.541
3570	0.5	Extremo 1A	19.112	2.105	-2.4E-05	-0.0139	-0.7294	898.938
3570	1	Extremo 1A	19.112	23.902	-2.4E-05	-0.0139	-0.7294	892.436
3570	0	Extremo 2A	19.112	-19.691	-2.4E-05	-0.0139	-0.7295	894.533
3570	0.5	Extremo 2A	19.112	2.107	-2.4E-05	-0.0139	-0.7294	898.929
3570	1	Extremo 2A	19.112	23.904	-2.4E-05	-0.0139	-0.7294	892.426
3571	0	Extremo 1A	19.112	75.833	-1.9E-05	-6.478	-0.7295	891.802
3571	0.5	Extremo 1A	19.112	97.63	-1.9E-05	-6.478	-0.7294	848.436
3571	1	Extremo 1A	19.112	119.428	-1.9E-05	-6.478	-0.7294	794.171
3571	0	Extremo 2A	19.112	75.835	-1.9E-05	-6.478	-0.7295	891.791
3571	0.5	Extremo 2A	19.112	97.633	-1.9E-05	-6.478	-0.7294	848.424
3571	1	Extremo 2A	19.112	119.43	-1.9E-05	-6.478	-0.7294	794.159
3572	0	Extremo 1A	19.112	171.1	-1.5E-05	-11.9548	-0.7295	792.099
3572	0.5	Extremo 1A	19.112	192.898	-1.5E-05	-11.9548	-0.7294	701.1
3572	1	Extremo 1A	19.112	214.695	-1.5E-05	-11.9548	-0.7294	599.202
3572	0	Extremo 2A	19.112	171.102	-1.5E-05	-11.9548	-0.7295	792.086
3572	0.5	Extremo 2A	19.112	192.9	-1.5E-05	-11.9548	-0.7294	701.086
3572	1	Extremo 2A	19.112	214.697	-1.5E-05	-11.9548	-0.7294	599.187
3573	0	Extremo 1A	19.112	265.566	-1.1E-05	-14.6732	-0.7295	595.117
3573	0.5	Extremo 1A	19.112	287.364	-1.1E-05	-14.6732	-0.7294	456.884
3573	1	Extremo 1A	19.112	309.161	-1.1E-05	-14.6732	-0.7294	307.753
3573	0	Extremo 2A	19.112	265.569	-1.1E-05	-14.6732	-0.7295	595.102
3573	0.5	Extremo 2A	19.112	287.366	-1.1E-05	-14.6732	-0.7294	456.868
3573	1	Extremo 2A	19.112	309.164	-1.1E-05	-14.6732	-0.7294	307.736
3574	0	Extremo 1A	19.112	358.097	-8.8E-06	-10.6822	-0.7295	300.65
3574	0.5	Extremo 1A	19.112	379.894	-8.8E-06	-10.6822	-0.7294	116.152
3574	1	Extremo 1A	19.112	401.692	-8.8E-06	-10.6822	-0.7294	-79.2444
3574	0	Extremo 2A	19.112	358.099	-8.8E-06	-10.6821	-0.7295	300.633
3574	0.5	Extremo 2A	19.112	379.897	-8.8E-06	-10.6821	-0.7294	116.134
3574	1	Extremo 2A	19.112	401.694	-8.8E-06	-10.6821	-0.7294	-79.2636
3575	0	Extremo 1A	19.112	445.896	-6.8E-06	8.0752	-0.7294	-91.349
3575	0.5	Extremo 1A	19.112	467.694	-6.8E-06	8.0752	-0.7294	-319.747
3575	1	Extremo 1A	19.112	489.491	-6.8E-06	8.0752	-0.7294	-559.043
3575	0	Extremo 2A	19.112	445.898	-6.8E-06	8.0754	-0.7294	-91.3682
3575	0.5	Extremo 2A	19.112	467.696	-6.8E-06	8.0754	-0.7294	-319.767
3575	1	Extremo 2A	19.112	489.493	-6.8E-06	8.0754	-0.7294	-559.064
3576	0	Extremo 1A	19.112	509.787	-5.3E-06	50.3358	-0.7294	-583.757
3576	0.5	Extremo 1A	19.112	531.584	-5.3E-06	50.3358	-0.7294	-844.099
3576	1	Extremo 1A	19.112	553.382	-5.3E-06	50.3358	-0.7294	-1115.34
3576	0	Extremo 2A	19.112	509.789	-5.3E-06	50.3363	-0.7294	-583.778
3576	0.5	Extremo 2A	19.112	531.586	-5.3E-06	50.3363	-0.7294	-844.122
3576	1	Extremo 2A	19.112	553.384	-5.3E-06	50.3363	-0.7294	-1115.36
3577	0	Extremo 1A	19.112	407.806	-4.1E-06	86.5546	-0.7294	-1174.84
3577	0.5	Extremo 1A	19.112	429.604	-4.1E-06	86.5546	-0.7294	-1384.19
3577	1	Extremo 1A	19.112	451.401	-4.1E-06	86.5546	-0.7294	-1604.45
3577	0	Extremo 2A	19.112	407.807	-4.1E-06	86.5553	-0.7294	-1174.87
3577	0.5	Extremo 2A	19.112	429.604	-4.1E-06	86.5553	-0.7294	-1384.22
3577	1	Extremo 2A	19.112	451.402	-4.1E-06	86.5553	-0.7294	-1604.47
3578	0	Extremo 1A	19.112	-449.837	-3.2E-06	-86.5725	-0.7294	-1604.45
3578	0.5	Extremo 1A	19.112	-428.039	-3.2E-06	-86.5725	-0.7294	-1384.98
3578	1	Extremo 1A	19.112	-406.242	-3.2E-06	-86.5725	-0.7294	-1176.41
3578	0	Extremo 2A	19.112	-449.843	-3.2E-06	-86.5732	-0.7294	-1604.47
3578	0.5	Extremo 2A	19.112	-428.046	-3.2E-06	-86.5732	-0.7294	-1385
3578	1	Extremo 2A	19.112	-406.248	-3.2E-06	-86.5732	-0.7294	-1176.43
3579	0	Extremo 1A	19.112	-551.818	-2.5E-06	-50.3536	-0.7294	-1116.91
3579	0.5	Extremo 1A	19.112	-530.02	-2.5E-06	-50.3536	-0.7294	-846.448
3579	1	Extremo 1A	19.112	-508.223	-2.5E-06	-50.3536	-0.7294	-586.888
3579	0	Extremo 2A	19.112	-551.826	-2.5E-06	-50.3541	-0.7294	-1116.93
3579	0.5	Extremo 2A	19.112	-530.028	-2.5E-06	-50.3541	-0.7294	-846.462
3579	1	Extremo 2A	19.112	-508.231	-2.5E-06	-50.3541	-0.7294	-586.897
3580	0	Extremo 1A	19.112	-487.927	-1.9E-06	-8.0929	-0.7294	-562.175
3580	0.5	Extremo 1A	19.112	-466.13	-1.9E-06	-8.0929	-0.7294	-323.661
3580	1	Extremo 1A	19.112	-444.332	-1.9E-06	-8.0929	-0.7294	-96.0458
3580	0	Extremo 2A	19.112	-487.935	-1.9E-06	-8.0931	-0.7294	-562.185
3580	0.5	Extremo 2A	19.112	-466.138	-1.9E-06	-8.0931	-0.7294	-323.666
3580	1	Extremo 2A	19.112	-444.34	-1.9E-06	-8.0931	-0.7294	-96.0469
3581	0	Extremo 1A	19.112	-400.128	-1.5E-06	10.6649	-0.7294	-83.9431
3581	0.5	Extremo 1A	19.112	-378.331	-1.5E-06	10.6649	-0.7294	110.672
3581	1	Extremo 1A	19.112	-356.533	-1.5E-06	10.6649	-0.7294	294.387
3581	0	Extremo 2A	19.112	-400.136	-1.5E-06	10.6648	-0.7294	-83.9442
3581	0.5	Extremo 2A	19.112	-378.339	-1.5E-06	10.6648	-0.7294	110.675
3581	1	Extremo 2A	19.112	-356.541	-1.5E-06	10.6648	-0.7294	294.395
3582	0	Extremo 1A	19.112	-307.598	-1.2E-06	14.6565	-0.7294	301.488
3582	0.5	Extremo 1A	19.112	-285.8	-1.2E-06	14.6565	-0.7294	449.838
3582	1	Extremo 1A	19.112	-264.003	-1.2E-06	14.6565	-0.7294	587.288
3582	0	Extremo 2A	19.112	-307.606	-1.2E-06	14.6565	-0.7294	301.495
3582	0.5	Extremo 2A	19.112	-285.808	-1.2E-06	14.6565	-0.7294	449.849
3582	1	Extremo 2A	19.112	-264.011	-1.2E-06	14.6565	-0.7294	587.304
3583	0	Extremo 1A	19.112	-213.132	-9.2E-07	11.9392	-0.7294	591.37
3583	0.5	Extremo 1A	19.112	-191.334	-9.2E-07	11.9392	-0.7294	692.487
3583	1	Extremo 1A	19.112	-169.537	-9.2E-07	11.9392	-0.7294	782.704
3583	0	Extremo 2A	19.112	-213.14	-9.2E-07	11.9392	-0.7294	591.385
3583	0.5	Extremo 2A	19.112	-191.343	-9.2E-07	11.9392	-0.7294	692.506
3583	1	Extremo 2A	19.112	-169.545	-9.2E-07	11.9392	-0.7294	782.728
3584	0	Extremo 1A	19.112	-117.865	-7.2E-07	6.4641	-0.7294	784.773
3584	0.5	Extremo 1A	19.112	-96.068	-7.2E-07	6.4641	-0.7294	838.256
3584	1	Extremo 1A	19.112	-74.27	-7.2E-07	6.4641	-0.7294	880.841
3584	0	Extremo 2A	19.112	-117.873	-7.2E-07	6.4642	-0.7294	784.796
3584	0.5	Extremo 2A	19.112	-96.076	-7.2E-07	6.4642	-0.7294	838.284
3584	1	Extremo 2A	19.112	-74.278	-7.2E-07	6.4642	-0.7294	880.872
3585	0	Extremo 1A	19.112	-22.341	-5.6E-07	0.0033	-0.7294	881.47
3585	0.5	Extremo 1A	19.112	-0.543	-5.6E-07	0.0033	-0.7294	887.191
3585	1	Extremo 1A	19.112	21.254	-5.6E-07	0.0033	-0.7294	882.013
3585	0	Extremo 2A	19.112	-22.349	-5.6E-07	0.0034	-0.7294	881.502
3585	0.5	Extremo 2A	19.112	-0.551	-5.6E-07	0.0034	-0.7294	887.227
3585	1	Extremo 2A	19.112	21.246	-5.6E-07	0.0034	-0.7294	882.053
3586	0	Extremo 1A	19.112	73.184	-4.4E-07	-6.4585	-0.7294	881.388
3586	0.5	Extremo 1A	19.112	94.982	-4.4E-07	-6.4585	-0.7294	839.347
3586	1	Extremo 1A	19.112	116.779	-4.4E-07	-6.4585	-0.7294	786.406
3586	0	Extremo 2A	19.112	73.176	-4.4E-07	-6.4584	-0.7294	881.428
3586	0.5	Extremo 2A	19.112	94.974	-4.4E-07	-6.4584	-0.7294	839.391
3586	1	Extremo 2A	19.112	116.771	-4.4E-07	-6.4584	-0.7294	786.454
3587	0	Extremo 1A	19.112	168.451	-3.4E-07	-11.9371	-0.7294	784.343
3587	0.5	Extremo 1A	19.112	190.249	-3.4E-07	-11.9371	-0.7294	694.668
3587	1	Extremo 1A	19.112	212.046	-3.4E-07	-11.9371	-0.7294	594.095
3587	0	Extremo 2A	19.112	168.443	-3.4E-07	-11.9372	-0.7294	784.391
3587	0.5	Extremo 2A	19.112	190.24	-3.4E-07	-11.9372	-0.7294	694.721
3587	1	Extremo 2A	19.112	212.038	-3.4E-07	-11.9372	-0.7294	594.151
3588	0	Extremo 1A	19.112	262.918	-2.7E-07	-14.6635	-0.7294	590.02
3588	0.5	Extremo 1A	19.112	284.715	-2.7E-07	-14.6635	-0.7294	453.112
3588	1	Extremo 1A	19.112	306.513	-2.7E-07	-14.6635	-0.7294	305.305
3588	0	Extremo 2A	19.112	262.91	-2.7E-07	-14.6636	-0.7294	590.077
3588	0.5	Extremo 2A	19.112	284.707	-2.7E-07	-14.6636	-0.7294	453.172
3588	1	Extremo 2A	19.112	306.505	-2.7E-07	-14.6636	-0.7294	305.369
3589	0	Extremo 1A	19.112	355.451	-2.1E-07	-10.6937	-0.7294	298.216
3589	0.5	Extremo 1A	19.112	377.248	-2.1E-07	-10.6937	-0.7294	115.041
3589	1	Extremo 1A	19.112	399.046	-2.1E-07	-10.6937	-0.7294	-79.0326
3589	0	Extremo 2A	19.112	355.443	-2.1E-07	-10.6941	-0.7294	298.28

3589	0.5	Extremo 2A	19.112	377.24	-2.1E-07	-10.6941	-0.7294	115.109
3589	1	Extremo 2A	19.112	399.038	-2.1E-07	-10.6941	-0.7294	-78.9599
3590	0	Extremo 1A	19.112	443.256	-1.6E-07	8.0135	-0.7294	-91.1166
3590	0.5	Extremo 1A	19.112	465.054	-1.6E-07	8.0135	-0.7294	-318.194
3590	1	Extremo 1A	19.112	486.851	-1.6E-07	8.0135	-0.7294	-556.171
3590	0	Extremo 2A	19.112	443.248	-1.6E-07	8.0125	-0.7294	-91.0436
3590	0.5	Extremo 2A	19.112	465.046	-1.6E-07	8.0125	-0.7294	-318.117
3590	1	Extremo 2A	19.112	486.843	-1.6E-07	8.0125	-0.7294	-556.09
3591	0	Extremo 1A	19.112	507.199	-1.3E-07	50.1795	-0.7294	-580.837
3591	0.5	Extremo 1A	19.112	528.996	-1.3E-07	50.1795	-0.7294	-839.886
3591	1	Extremo 1A	19.112	550.794	-1.3E-07	50.1795	-0.7294	-1109.83
3591	0	Extremo 2A	19.112	507.192	-1.3E-07	50.1774	-0.7294	-580.756
3591	0.5	Extremo 2A	19.112	528.989	-1.3E-07	50.1774	-0.7294	-839.801
3591	1	Extremo 2A	19.112	550.787	-1.3E-07	50.1774	-0.7294	-1109.74
3592	0	Extremo 1A	19.112	405.66	-9.9E-08	86.336	-0.7294	-1169.2
3592	0.5	Extremo 1A	19.112	427.457	-9.9E-08	86.336	-0.7294	-1377.48
3592	1	Extremo 1A	19.112	449.255	-9.9E-08	86.336	-0.7294	-1596.66
3592	0	Extremo 2A	19.112	405.658	-9.9E-08	86.3331	-0.7294	-1169.11
3592	0.5	Extremo 2A	19.112	427.455	-9.9E-08	86.3331	-0.7294	-1377.39
3592	1	Extremo 2A	19.112	449.253	-9.9E-08	86.3331	-0.7294	-1596.57
3593	0	Extremo 1A	19.112	-449.698	-7.7E-08	-86.3312	-0.7294	-1596.66
3593	0.5	Extremo 1A	19.112	-427.901	-7.7E-08	-86.3312	-0.7294	-1377.26
3593	1	Extremo 1A	19.112	-406.103	-7.7E-08	-86.3312	-0.7294	-1168.76
3593	0	Extremo 2A	19.112	-449.673	-7.7E-08	-86.3286	-0.7294	-1596.57
3593	0.5	Extremo 2A	19.112	-427.876	-7.7E-08	-86.3286	-0.7294	-1377.18
3593	1	Extremo 2A	19.112	-406.078	-7.7E-08	-86.3286	-0.7294	-1168.69
3594	0	Extremo 1A	19.112	-551.238	-6E-08	-50.1747	-0.7294	-1109.39
3594	0.5	Extremo 1A	19.112	-529.44	-6E-08	-50.1747	-0.7294	-839.22
3594	1	Extremo 1A	19.112	-507.643	-6E-08	-50.1747	-0.7294	-579.949
3594	0	Extremo 2A	19.112	-551.207	-6E-08	-50.1729	-0.7294	-1109.32
3594	0.5	Extremo 2A	19.112	-529.41	-6E-08	-50.1729	-0.7294	-839.169
3594	1	Extremo 2A	19.112	-507.612	-6E-08	-50.1729	-0.7294	-579.914
3595	0	Extremo 1A	19.112	-487.295	-4.7E-08	-8.0088	-0.7294	-555.282
3595	0.5	Extremo 1A	19.112	-465.498	-4.7E-08	-8.0088	-0.7294	-317.084
3595	1	Extremo 1A	19.112	-443.7	-4.7E-08	-8.0088	-0.7294	-89.7844
3595	0	Extremo 2A	19.112	-487.264	-4.6E-08	-8.008	-0.7294	-555.247
3595	0.5	Extremo 2A	19.112	-465.467	-4.6E-08	-8.008	-0.7294	-317.064
3595	1	Extremo 2A	19.112	-443.669	-4.6E-08	-8.008	-0.7294	-89.7801
3596	0	Extremo 1A	19.112	-399.489	-3.6E-08	10.6983	-0.7294	-77.6999
3596	0.5	Extremo 1A	19.112	-377.692	-3.6E-08	10.6983	-0.7294	116.595
3596	1	Extremo 1A	19.112	-355.894	-3.6E-08	10.6983	-0.7294	299.992
3596	0	Extremo 2A	19.112	-399.458	-3.6E-08	10.6985	-0.7294	-77.6959
3596	0.5	Extremo 2A	19.112	-377.661	-3.6E-08	10.6985	-0.7294	116.584
3596	1	Extremo 2A	19.112	-355.863	-3.6E-08	10.6985	-0.7294	299.965
3597	0	Extremo 1A	19.112	-306.956	-2.8E-08	14.6679	-0.7294	307.082
3597	0.5	Extremo 1A	19.112	-285.159	-2.8E-08	14.6679	-0.7294	455.111
3597	1	Extremo 1A	19.112	-263.361	-2.8E-08	14.6679	-0.7294	592.241
3597	0	Extremo 2A	19.112	-306.925	-2.8E-08	14.6678	-0.7294	307.055
3597	0.5	Extremo 2A	19.112	-285.128	-2.8E-08	14.6678	-0.7294	455.068
3597	1	Extremo 2A	19.112	-263.33	-2.8E-08	14.6678	-0.7294	592.183
3598	0	Extremo 1A	19.112	-212.489	-2.2E-08	11.9413	-0.7294	596.316
3598	0.5	Extremo 1A	19.112	-190.692	-2.2E-08	11.9413	-0.7294	697.111
3598	1	Extremo 1A	19.112	-168.894	-2.2E-08	11.9413	-0.7294	787.008
3598	0	Extremo 2A	19.112	-212.458	-2.1E-08	11.9411	-0.7294	596.258
3598	0.5	Extremo 2A	19.112	-190.661	-2.1E-08	11.9411	-0.7294	697.038
3598	1	Extremo 2A	19.112	-168.863	-2.1E-08	11.9411	-0.7294	786.919
3599	0	Extremo 1A	19.112	-117.222	-1.7E-08	6.4621	-0.7294	789.072
3599	0.5	Extremo 1A	19.112	-95.425	-1.7E-08	6.4621	-0.7294	842.234
3599	1	Extremo 1A	19.112	-73.627	-1.7E-08	6.4621	-0.7294	884.497
3599	0	Extremo 2A	19.112	-117.191	-1.6E-08	6.4619	-0.7294	788.983
3599	0.5	Extremo 2A	19.112	-95.394	-1.6E-08	6.4619	-0.7294	842.129
3599	1	Extremo 2A	19.112	-73.596	-1.6E-08	6.4619	-0.7294	884.377
3600	0	Extremo 1A	19.112	-21.697	-1.3E-08	-0.0006	-0.7294	885.124
3600	0.5	Extremo 1A	19.112	0.1	-1.3E-08	-0.0006	-0.7294	890.523
3600	1	Extremo 1A	19.112	21.898	-1.3E-08	-0.0006	-0.7294	885.024
3600	0	Extremo 2A	19.112	-21.666	-1.1E-08	-0.00079	-0.7294	885.003
3600	0.5	Extremo 2A	19.112	0.131	-1.1E-08	-0.00079	-0.7294	890.387
3600	1	Extremo 2A	19.112	21.929	-1.1E-08	-0.00079	-0.7294	884.872
3601	0	Extremo 1A	19.112	73.828	-9.8E-09	-6.4631	-0.7294	884.396
3601	0.5	Extremo 1A	19.112	95.625	-9.8E-09	-6.4631	-0.7294	842.033
3601	1	Extremo 1A	19.112	117.423	-9.8E-09	-6.4631	-0.7294	788.771
3601	0	Extremo 2A	19.112	73.859	-7.6E-09	-6.4632	-0.7294	884.245
3601	0.5	Extremo 2A	19.112	95.656	-7.6E-09	-6.4632	-0.7294	841.866
3601	1	Extremo 2A	19.112	117.454	-7.6E-09	-6.4632	-0.7294	788.588
3602	0	Extremo 1A	19.112	169.095	-7.3E-09	-11.9416	-0.7294	786.706
3602	0.5	Extremo 1A	19.112	190.892	-7.3E-09	-11.9416	-0.7294	696.709
3602	1	Extremo 1A	19.112	212.69	-7.3E-09	-11.9416	-0.7294	595.814
3602	0	Extremo 2A	19.112	169.126	-4.6E-09	-11.9415	-0.7294	786.523
3602	0.5	Extremo 2A	19.112	190.923	-4.6E-09	-11.9415	-0.7294	696.511
3602	1	Extremo 2A	19.112	212.721	-4.6E-09	-11.9415	-0.7294	595.6
3603	0	Extremo 1A	19.112	263.561	-5.3E-09	-14.6666	-0.7294	591.737
3603	0.5	Extremo 1A	19.112	285.359	-5.3E-09	-14.6666	-0.7294	454.507
3603	1	Extremo 1A	19.112	307.156	-5.3E-09	-14.6666	-0.7294	306.378
3603	0	Extremo 2A	19.112	263.592	-1.8E-09	-14.6661	-0.7294	591.523
3603	0.5	Extremo 2A	19.112	285.39	-1.8E-09	-14.6661	-0.7294	454.278
3603	1	Extremo 2A	19.112	307.187	-1.8E-09	-14.6661	-0.7294	306.134
3604	0	Extremo 1A	19.112	356.094	-3.7E-09	-10.693	-0.7294	299.286
3604	0.5	Extremo 1A	19.112	377.891	-3.7E-09	-10.693	-0.7294	115.79
3604	1	Extremo 1A	19.112	399.689	-3.7E-09	-10.693	-0.7294	-78.6051
3604	0	Extremo 2A	19.112	356.125	7.4E-10	-10.6915	-0.7294	299.041
3604	0.5	Extremo 2A	19.112	377.922	7.4E-10	-10.6915	-0.7294	115.529
3604	1	Extremo 2A	19.112	399.72	7.4E-10	-10.6915	-0.7294	-78.8811
3605	0	Extremo 1A	19.112	443.898	-2.4E-09	8.0234	-0.7294	-90.693
3605	0.5	Extremo 1A	19.112	465.696	-2.4E-09	8.0234	-0.7294	-318.092
3605	1	Extremo 1A	19.112	487.493	-2.4E-09	8.0234	-0.7294	-556.389
3605	0	Extremo 2A	19.112	443.929	3.3E-09	8.0272	-0.7294	-90.9699
3605	0.5	Extremo 2A	19.112	465.726	3.3E-09	8.0272	-0.7294	-318.384
3605	1	Extremo 2A	19.112	487.524	3.3E-09	8.0272	-0.7294	-556.696
3606	0	Extremo 1A	19.112	507.831	-1.3E-09	50.2068	-0.7294	-581.065
3606	0.5	Extremo 1A	19.112	529.629	-1.3E-09	50.2068	-0.7294	-840.43
3606	1	Extremo 1A	19.112	551.426	-1.3E-09	50.2068	-0.7294	-1110.69
3606	0	Extremo 2A	19.112	507.859	6E-09	50.2149	-0.7294	-581.374
3606	0.5	Extremo 2A	19.112	529.657	6E-09	50.2149	-0.7294	-840.753
3606	1	Extremo 2A	19.112	551.454	6E-09	50.2149	-0.7294	-1111.03
3607	0	Extremo 1A	19.112	406.211	-3.6E-10	86.3748	-0.7294	-1170.09
3607	0.5	Extremo 1A	19.112	428.008	-3.6E-10	86.3748	-0.7294	-1378.64
3607	1	Extremo 1A	19.112	449.806	-3.6E-10	86.3748	-0.7294	-1598.09
3607	0	Extremo 2A	19.112	406.219	9E-09	86.3856	-0.7294	-1170.43
3607	0.5	Extremo 2A	19.112	428.016	9E-09	86.3856	-0.7294	-1378.99
3607	1	Extremo 2A	19.112	449.814	9E-09	86.3856	-0.7294	-1598.45
3608	0	Extremo 1A	19.112	-449.569	5.3E-10	-86.3773	-0.7294	-1598.09
3608	0.5	Extremo 1A	19.112	-427.771	5.3E-10	-86.3773	-0.7294	-1378.76
3608	1	Extremo 1A	19.112	-405.974	5.3E-10	-86.3773	-0.7294	-1170.32
3608	0	Extremo 2A	19.112	-449.664	1.2E-08	-86.3872	-0.7294	-1598.45
3608	0.5	Extremo 2A	19.112	-427.866	1.2E-08	-86.3872	-0.7294	-1379.06
3608	1	Extremo 2A	19.112	-406.069	1.2E-08	-86.3872	-0.7294	-1170.58
3609	0	Extremo 1A	19.112	-551.189	1.4E-09	-50.2093	-0.7294	-1110.93
3609	0.5	Extremo 1A	19.112	-529.392	1.4E-09	-50.2093	-0.7294	-840.786
3609	1	Extremo 1A	19.112	-507.594	1.4E-09	-50.2093	-0.7294	-581.539
3609	0	Extremo 2A	19.112	-551.304	1.7E-08	-50.2164	-0.7294	-1111.18
3609	0.5	Extremo 2A	19.112	-529.507	1.7E-08	-50.2164	-0.7294	-840.979
3609	1	Extremo 2A	19.112	-507.709	1.7E-08	-50.2164	-0.7294	-581.675
3610	0	Extremo 1A	19.112	-487.256	2.3E-09	-8.0259	-0.7294	-556.864
3610	0.5	Extremo 1A	19.112	-465.459	2.3E-09	-8.0259	-0.7294	-318.685
3610	1	Extremo 1A	19.112	-443.661	2.3E-09	-8.0259	-0.7294	-91.405
3610	0	Extremo 2A	19.112	-487.374	2.2E-08	-8.0287	-0.7294	-556.997
3610	0.5	Extremo 2A	19.112	-465.576	2.2E-08	-8.0287	-0.7294	-318.76
3610	1	Extremo 2A	19.112	-443.779	2.2E-08	-8.0287	-0.7294	-91.4213
3611	0	Extremo 1A	19.112	-399.452	3.2E-09	10.6906	-0.7294	-79.3173
3611	0.5	Extremo 1A	19.112	-377.654	3.2E-09	10.6906	-0.7294	114.959
3611	1	Extremo 1A	19.112	-355.857	3.2E-09	10.6906	-0.7294	298.337
3611	0	Extremo 2A	19.112	-399.569	2.8E-08	10.69	-0.7294	-79.3327
3611	0.5	Extremo 2A	19.112	-377.772	2.8E-08	10.69	-0.7294	115.003
3611	1	Extremo 2A	19.112	-355.974	2.8E-08	10.69	-0.7294	298.439
3612	0	Extremo 1A	19.112	-306.919	4.3E-09	14.6643	-0.7294	305.429
3612	0.5	Extremo 1A	19.112	-285.122	4.3E-09	14.6643	-0.7294	453.439
3612	1	Extremo 1A	19.112	-263.324	4.3E-09	14.6643	-0.7294	590.551
3612	0	Extremo 2A	19.112	-307.037	3.6E-08	14.6647	-0.7294	305.531
3612	0.5	Extremo 2A	19.112	-285.24	3.6E-08	14.6647	-0.7294	453.601
3612	1	Extremo 2A	19.112	-263.442	3.6E-08	14.6647	-0.7294	590.771
3613	0	Extremo 1A	19.112	-212.453	5.6E-09	11.9394	-0.7294	594.627
3613	0.5	Extremo 1A	19.112	-190.655	5.6E-09	11.9394	-0.7294	695.404
3613	1	Extremo 1A	19.112	-168.858	5.6E-09	11.9394	-0.7294	785.282
3613	0	Extremo 2A	19.112	-212.57	4.6E-08	11.9402	-0.7294	594.847

3613	0.5	Extremo 2A	19.112	-190.773	4.6E-08	11.9402	-0.7294	695.683
3613	1	Extremo 2A	19.112	-168.975	4.6E-08	11.9402	-0.7294	785.62
3614	0	Extremo 1A	19.112	-117.186	7.2E-09	6.4612	-0.7294	787.346
3614	0.5	Extremo 1A	19.112	-95.388	7.2E-09	6.4612	-0.7294	840.49
3614	1	Extremo 1A	19.112	-73.591	7.2E-09	6.4612	-0.7294	882.735
3614	0	Extremo 2A	19.112	-117.303	5.9E-08	6.4621	-0.7294	787.685
3614	0.5	Extremo 2A	19.112	-95.506	5.9E-08	6.4621	-0.7294	840.888
3614	1	Extremo 2A	19.112	-73.708	5.9E-08	6.4621	-0.7294	883.191
3615	0	Extremo 1A	19.112	-21.661	9.1E-09	-0.00083	-0.7294	883.361
3615	0.5	Extremo 1A	19.112	0.137	9.1E-09	-0.00083	-0.7294	888.742
3615	1	Extremo 1A	19.112	21.934	9.1E-09	-0.00083	-0.7294	883.225
3615	0	Extremo 2A	19.112	-21.778	7.6E-08	-7.9E-05	-0.7294	883.818
3615	0.5	Extremo 2A	19.112	0.019	7.6E-08	-7.9E-05	-0.7294	889.258
3615	1	Extremo 2A	19.112	21.817	7.6E-08	-7.9E-05	-0.7294	883.799
3616	0	Extremo 1A	19.112	73.864	1.2E-08	-6.4626	-0.7294	882.597
3616	0.5	Extremo 1A	19.112	95.662	1.2E-08	-6.4626	-0.7294	840.215
3616	1	Extremo 1A	19.112	117.459	1.2E-08	-6.4626	-0.7294	786.935
3616	0	Extremo 2A	19.112	73.746	9.7E-08	-6.4622	-0.7294	883.172
3616	0.5	Extremo 2A	19.112	95.544	9.7E-08	-6.4622	-0.7294	840.849
3616	1	Extremo 2A	19.112	117.341	9.7E-08	-6.4622	-0.7294	787.628
3617	0	Extremo 1A	19.112	169.131	1.5E-08	-11.9399	-0.7294	784.869
3617	0.5	Extremo 1A	19.112	190.928	1.5E-08	-11.9399	-0.7294	694.855
3617	1	Extremo 1A	19.112	212.726	1.5E-08	-11.9399	-0.7294	593.941
3617	0	Extremo 2A	19.112	169.013	1.2E-07	-11.9402	-0.7294	785.563
3617	0.5	Extremo 2A	19.112	190.811	1.2E-07	-11.9402	-0.7294	695.607
3617	1	Extremo 2A	19.112	212.608	1.2E-07	-11.9402	-0.7294	594.752
3618	0	Extremo 1A	19.112	263.597	1.8E-08	-14.6625	-0.7294	589.863
3618	0.5	Extremo 1A	19.112	285.395	1.8E-08	-14.6625	-0.7294	452.615
3618	1	Extremo 1A	19.112	307.192	1.8E-08	-14.6625	-0.7294	304.468
3618	0	Extremo 2A	19.112	263.48	1.6E-07	-14.6644	-0.7294	590.675
3618	0.5	Extremo 2A	19.112	285.278	1.6E-07	-14.6644	-0.7294	453.486
3618	1	Extremo 2A	19.112	307.075	1.6E-07	-14.6644	-0.7294	305.398
3619	0	Extremo 1A	19.112	356.129	2.3E-08	-10.6833	-0.7294	297.374
3619	0.5	Extremo 1A	19.112	377.927	2.3E-08	-10.6833	-0.7294	113.86
3619	1	Extremo 1A	19.112	399.724	2.3E-08	-10.6833	-0.7294	-80.5528
3619	0	Extremo 2A	19.112	356.012	2E-07	-10.689	-0.7294	298.305
3619	0.5	Extremo 2A	19.112	377.81	2E-07	-10.689	-0.7294	114.849
3619	1	Extremo 2A	19.112	399.607	2E-07	-10.689	-0.7294	-79.5048
3620	0	Extremo 1A	19.112	443.932	3E-08	8.0459	-0.7294	-92.6451
3620	0.5	Extremo 1A	19.112	465.729	3E-08	8.0459	-0.7294	-320.061
3620	1	Extremo 1A	19.112	487.527	3E-08	8.0459	-0.7294	-558.375
3620	0	Extremo 2A	19.112	443.816	2.6E-07	8.0315	-0.7294	-91.594
3620	0.5	Extremo 2A	19.112	465.614	2.6E-07	8.0315	-0.7294	-318.952
3620	1	Extremo 2A	19.112	487.411	2.6E-07	8.0315	-0.7294	-557.208
3621	0	Extremo 1A	19.112	507.852	3.8E-08	50.2531	-0.7294	-583.061
3621	0.5	Extremo 1A	19.112	529.649	3.8E-08	50.2531	-0.7294	-842.437
3621	1	Extremo 1A	19.112	551.447	3.8E-08	50.2531	-0.7294	-1112.71
3621	0	Extremo 2A	19.112	507.745	3.3E-07	50.2224	-0.7294	-581.887
3621	0.5	Extremo 2A	19.112	529.543	3.3E-07	50.2224	-0.7294	-841.209
3621	1	Extremo 2A	19.112	551.34	3.3E-07	50.2224	-0.7294	-1111.43
3622	0	Extremo 1A	19.112	406.12	4.8E-08	86.4368	-0.7294	-1172.14
3622	0.5	Extremo 1A	19.112	427.918	4.8E-08	86.4368	-0.7294	-1380.65
3622	1	Extremo 1A	19.112	449.715	4.8E-08	86.4368	-0.7294	-1600.05
3622	0	Extremo 2A	19.112	406.089	4.3E-07	86.3952	-0.7294	-1170.83
3622	0.5	Extremo 2A	19.112	427.887	4.3E-07	86.3952	-0.7294	-1379.33
3622	1	Extremo 2A	19.112	449.684	4.3E-07	86.3952	-0.7294	-1598.72
3623	0	Extremo 1A	19.112	-450.234	6.1E-08	-86.4311	-0.7294	-1600.05
3623	0.5	Extremo 1A	19.112	-428.437	6.1E-08	-86.4311	-0.7294	-1380.39
3623	1	Extremo 1A	19.112	-406.639	6.1E-08	-86.4311	-0.7294	-1171.62
3623	0	Extremo 2A	19.112	-449.874	5.5E-07	-86.3941	-0.7294	-1598.72
3623	0.5	Extremo 2A	19.112	-428.076	5.5E-07	-86.3941	-0.7294	-1379.23
3623	1	Extremo 2A	19.112	-406.279	5.5E-07	-86.3941	-0.7294	-1170.64
3624	0	Extremo 1A	19.112	-551.966	7.8E-08	-50.2474	-0.7294	-1112.19
3624	0.5	Extremo 1A	19.112	-530.168	7.8E-08	-50.2474	-0.7294	-841.657
3624	1	Extremo 1A	19.112	-508.371	7.8E-08	-50.2474	-0.7294	-582.022
3624	0	Extremo 2A	19.112	-551.53	7E-07	-50.2213	-0.7294	-1111.24
3624	0.5	Extremo 2A	19.112	-529.732	7E-07	-50.2213	-0.7294	-840.924
3624	1	Extremo 2A	19.112	-507.935	7E-07	-50.2213	-0.7294	-581.507
3625	0	Extremo 1A	19.112	-488.046	1E-07	-8.0402	-0.7294	-557.335
3625	0.5	Extremo 1A	19.112	-466.248	1E-07	-8.0402	-0.7294	-318.762
3625	1	Extremo 1A	19.112	-444.451	1E-07	-8.0402	-0.7294	-91.0866
3625	0	Extremo 2A	19.112	-487.601	9E-07	-8.0304	-0.7294	-556.828
3625	0.5	Extremo 2A	19.112	-465.803	9E-07	-8.0304	-0.7294	-318.477
3625	1	Extremo 2A	19.112	-444.006	9E-07	-8.0304	-0.7294	-91.0247
3626	0	Extremo 1A	19.112	-400.243	1.3E-07	10.6888	-0.7294	-78.9937
3626	0.5	Extremo 1A	19.112	-378.445	1.3E-07	10.6888	-0.7294	115.678
3626	1	Extremo 1A	19.112	-356.648	1.3E-07	10.6888	-0.7294	299.452
3626	0	Extremo 2A	19.112	-399.797	1.2E-06	10.69	-0.7294	-78.9353
3626	0.5	Extremo 2A	19.112	-377.999	1.2E-06	10.69	-0.7294	115.514
3626	1	Extremo 2A	19.112	-356.202	1.2E-06	10.69	-0.7294	299.064
3627	0	Extremo 1A	19.112	-307.711	1.6E-07	14.6678	-0.7294	306.547
3627	0.5	Extremo 1A	19.112	-285.914	1.6E-07	14.6678	-0.7294	454.953
3627	1	Extremo 1A	19.112	-264.116	1.6E-07	14.6678	-0.7294	592.461
3627	0	Extremo 2A	19.112	-307.265	1.5E-06	14.6654	-0.7294	306.157
3627	0.5	Extremo 2A	19.112	-285.467	1.5E-06	14.6654	-0.7294	454.34
3627	1	Extremo 2A	19.112	-263.67	1.5E-06	14.6654	-0.7294	591.624
3628	0	Extremo 1A	19.112	-213.245	2.1E-07	11.9449	-0.7294	596.54
3628	0.5	Extremo 1A	19.112	-191.447	2.1E-07	11.9449	-0.7294	697.713
3628	1	Extremo 1A	19.112	-169.65	2.1E-07	11.9449	-0.7294	787.987
3628	0	Extremo 2A	19.112	-212.798	1.9E-06	11.9411	-0.7294	595.701
3628	0.5	Extremo 2A	19.112	-191	1.9E-06	11.9411	-0.7294	696.651
3628	1	Extremo 2A	19.112	-169.203	1.9E-06	11.9411	-0.7294	786.702
3629	0	Extremo 1A	19.112	-117.978	2.7E-07	6.467	-0.7294	790.054
3629	0.5	Extremo 1A	19.112	-96.18	2.7E-07	6.467	-0.7294	843.593
3629	1	Extremo 1A	19.112	-74.383	2.7E-07	6.467	-0.7294	886.234
3629	0	Extremo 2A	19.112	-117.531	2.5E-06	6.4629	-0.7294	788.767
3629	0.5	Extremo 2A	19.112	-95.733	2.5E-06	6.4629	-0.7294	842.083
3629	1	Extremo 2A	19.112	-73.936	2.5E-06	6.4629	-0.7294	884.501
3630	0	Extremo 1A	19.112	-22.452	3.4E-07	0.0041	-0.7294	886.863
3630	0.5	Extremo 1A	19.112	-0.655	3.4E-07	0.0041	-0.7294	892.64
3630	1	Extremo 1A	19.112	21.143	3.4E-07	0.0041	-0.7294	887.518
3630	0	Extremo 2A	19.112	-22.006	3.2E-06	0.00041	-0.7294	885.128
3630	0.5	Extremo 2A	19.112	-0.208	3.2E-06	0.00041	-0.7294	890.682
3630	1	Extremo 2A	19.112	21.589	3.2E-06	0.00041	-0.7294	885.337
3631	0	Extremo 1A	19.112	73.073	4.4E-07	-6.4599	-0.7294	886.894
3631	0.5	Extremo 1A	19.112	94.87	4.4E-07	-6.4599	-0.7294	844.908
3631	1	Extremo 1A	19.112	116.668	4.4E-07	-6.4599	-0.7294	792.024
3631	0	Extremo 2A	19.112	73.519	4.1E-06	-6.4624	-0.7294	884.71
3631	0.5	Extremo 2A	19.112	95.317	4.1E-06	-6.4624	-0.7294	842.502
3631	1	Extremo 2A	19.112	117.114	4.1E-06	-6.4624	-0.7294	789.394
3632	0	Extremo 1A	19.112	168.34	5.6E-07	-11.9422	-0.7294	789.963
3632	0.5	Extremo 1A	19.112	190.138	5.6E-07	-11.9422	-0.7294	700.343
3632	1	Extremo 1A	19.112	211.935	5.6E-07	-11.9422	-0.7294	599.825
3632	0	Extremo 2A	19.112	168.786	5.3E-06	-11.9419	-0.7294	787.33
3632	0.5	Extremo 2A	19.112	190.584	5.3E-06	-11.9419	-0.7294	697.488
3632	1	Extremo 2A	19.112	212.381	5.3E-06	-11.9419	-0.7294	596.747
3633	0	Extremo 1A	19.112	262.808	7.2E-07	-14.6761	-0.7294	595.755
3633	0.5	Extremo 1A	19.112	284.606	7.2E-07	-14.6761	-0.7294	458.902
3633	1	Extremo 1A	19.112	306.403	7.2E-07	-14.6761	-0.7294	311.15
3633	0	Extremo 2A	19.112	263.253	6.8E-06	-14.6693	-0.7294	592.672
3633	0.5	Extremo 2A	19.112	285.05	6.8E-06	-14.6693	-0.7294	455.596
3633	1	Extremo 2A	19.112	306.848	6.8E-06	-14.6693	-0.7294	307.622
3634	0	Extremo 1A	19.112	355.343	9.3E-07	-10.7235	-0.7294	304.068
3634	0.5	Extremo 1A	19.112	377.14	9.3E-07	-10.7235	-0.7294	120.947
3634	1	Extremo 1A	19.112	398.938	9.3E-07	-10.7235	-0.7294	-73.0726
3634	0	Extremo 2A	19.112	355.785	8.7E-06	-10.7018	-0.7294	300.533
3634	0.5	Extremo 2A	19.112	377.583	8.7E-06	-10.7018	-0.7294	117.191
3634	1	Extremo 2A	19.112	399.38	8.7E-06	-10.7018	-0.7295	-77.0503
3635	0	Extremo 1A	19.112	443.154	1.2E-06	7.9445	-0.7294	-85.1428
3635	0.5	Extremo 1A	19.112	464.952	1.2E-06	7.9445	-0.7294	-312.169
3635	1	Extremo 1A	19.112	486.749	1.2E-06	7.9445	-0.7294	-550.095
3635	0	Extremo 2A	19.112	443.591	1.1E-05	8.0003	-0.7294	-89.1333
3635	0.5	Extremo 2A	19.112	465.388	1.1E-05	8.0003	-0.7294	-316.378
3635	1	Extremo 2A	19.112	487.186	1.1E-05	8.0003	-0.7295	-554.522
3636	0	Extremo 1A	19.112	507.137	1.5E-06	50.0371	-0.7294	-574.727
3636	0.5	Extremo 1A	19.112	528.935	1.5E-06	50.0371	-0.7294	-833.745
3636	1	Extremo 1A	19.112	550.732	1.5E-06	50.0371	-0.7294	-1103.66
3636	0	Extremo 2A	19.112	507.538	1.5E-05	50.1569	-0.7294	-579.185
3636	0.5	Extremo 2A	19.112	529.335	1.5E-05	50.1569	-0.7294	-838.403
3636	1	Extremo 2A	19.112	551.133	1.5E-05	50.1569	-0.7295	-1108.52
3637	0	Extremo 1A	19.112	405.938	2E-06	86.1449	-0.7294	-1162.93
3637	0.5	Extremo 1A	19.112	427.736	2E-06	86.1449	-0.7294	-1371.35
3637	1	Extremo 1A	19.112	449.533	2E-06	86.1449	-0.7294	-1590.66
3637	0	Extremo 2A	19.112	406.05	1.9E-05	86.3095	-0.7294	-1167.87

3637	0.5	Extremo 2A	19.112	427.848	1.9E-05	86.3095	-0.7294	-1376.35
3637	1	Extremo 2A	19.112	449.645	1.9E-05	86.3095	-0.7295	-1595.72
3638	0	Extremo 1A	19.112	-447.663	2.5E-06	-86.1696	-0.7294	-1590.67
3638	0.5	Extremo 1A	19.112	-425.865	2.5E-06	-86.1696	-0.7294	-1372.28
3638	1	Extremo 1A	19.112	-404.068	2.5E-06	-86.1696	-0.7294	-1164.8
3638	0	Extremo 2A	19.112	-449.025	2.4E-05	-86.2951	-0.7294	-1595.72
3638	0.5	Extremo 2A	19.112	-427.228	2.4E-05	-86.2951	-0.7294	-1376.66
3638	1	Extremo 2A	19.112	-405.43	2.4E-05	-86.2951	-0.7295	-1168.49
3639	0	Extremo 1A	19.112	-548.862	3.3E-06	-50.0617	-0.7294	-1105.54
3639	0.5	Extremo 1A	19.112	-527.064	3.3E-06	-50.0617	-0.7294	-836.554
3639	1	Extremo 1A	19.112	-505.267	3.3E-06	-50.0617	-0.7294	-578.471
3639	0	Extremo 2A	19.112	-550.513	3.2E-05	-50.1424	-0.7294	-1109.14
3639	0.5	Extremo 2A	19.112	-528.715	3.2E-05	-50.1424	-0.7294	-839.333
3639	1	Extremo 2A	19.112	-506.918	3.2E-05	-50.1424	-0.7295	-580.425
3640	0	Extremo 1A	19.112	-484.879	4.2E-06	-7.9689	-0.7294	-553.84
3640	0.5	Extremo 1A	19.112	-463.082	4.2E-06	-7.9689	-0.7294	-316.85
3640	1	Extremo 1A	19.112	-441.284	4.2E-06	-7.9689	-0.7294	-90.7585
3640	0	Extremo 2A	19.112	-486.566	4.1E-05	-7.9859	-0.7294	-555.762
3640	0.5	Extremo 2A	19.112	-464.769	4.1E-05	-7.9859	-0.7294	-317.929
3640	1	Extremo 2A	19.112	-442.971	4.1E-05	-7.9859	-0.7295	-90.9938
3641	0	Extremo 1A	19.112	-397.068	5.4E-06	10.6996	-0.7294	-78.6906
3641	0.5	Extremo 1A	19.112	-375.271	5.4E-06	10.6996	-0.7294	114.394
3641	1	Extremo 1A	19.112	-353.473	5.4E-06	10.6996	-0.7294	296.58
3641	0	Extremo 2A	19.112	-398.76	5.3E-05	10.7163	-0.7294	-78.9111
3641	0.5	Extremo 2A	19.112	-376.963	5.3E-05	10.7163	-0.7294	115.02
3641	1	Extremo 2A	19.112	-355.165	5.3E-05	10.7163	-0.7295	298.052
3642	0	Extremo 1A	19.112	-304.534	7E-06	14.6529	-0.7294	303.659
3642	0.5	Extremo 1A	19.112	-282.736	7E-06	14.6529	-0.7294	450.476
3642	1	Extremo 1A	19.112	-260.939	7E-06	14.6529	-0.7294	586.395
3642	0	Extremo 2A	19.112	-306.228	6.9E-05	14.684	-0.7294	305.141
3642	0.5	Extremo 2A	19.112	-284.43	6.9E-05	14.684	-0.7294	452.805
3642	1	Extremo 2A	19.112	-262.633	6.9E-05	14.684	-0.7295	589.571
3643	0	Extremo 1A	19.112	-210.066	9E-06	11.9203	-0.7294	590.462
3643	0.5	Extremo 1A	19.112	-188.269	9E-06	11.9203	-0.7294	690.045
3643	1	Extremo 1A	19.112	-166.471	9E-06	11.9203	-0.7295	778.73
3643	0	Extremo 2A	19.112	-211.761	8.9E-05	11.9567	-0.7294	593.645
3643	0.5	Extremo 2A	19.112	-189.964	8.9E-05	11.9567	-0.7295	694.076
3643	1	Extremo 2A	19.112	-168.166	8.9E-05	11.9567	-0.7295	783.609
3644	0	Extremo 1A	19.112	-114.8	1.2E-05	6.4402	-0.7294	780.787
3644	0.5	Extremo 1A	19.112	-93.002	1.2E-05	6.4402	-0.7294	832.737
3644	1	Extremo 1A	19.112	-71.205	1.2E-05	6.4402	-0.7295	873.789
3644	0	Extremo 2A	19.112	-116.494	0.00012	6.4774	-0.7294	785.672
3644	0.5	Extremo 2A	19.112	-94.696	0.00012	6.4774	-0.7295	838.469
3644	1	Extremo 2A	19.112	-72.899	0.00012	6.4774	-0.7295	880.368
3645	0	Extremo 1A	19.112	-19.276	1.5E-05	-0.0198	-0.7294	874.407
3645	0.5	Extremo 1A	19.112	2.522	1.5E-05	-0.0198	-0.7294	878.595
3645	1	Extremo 1A	19.112	24.319	1.5E-05	-0.0198	-0.7295	871.885
3645	0	Extremo 2A	19.112	-20.968	0.00015	0.015	-0.7294	880.994
3645	0.5	Extremo 2A	19.112	0.829	0.00015	0.015	-0.7295	886.029
3645	1	Extremo 2A	19.112	22.627	0.00015	0.015	-0.7295	880.165
3646	0	Extremo 1A	19.112	76.248	1.9E-05	-6.475	-0.7294	871.246
3646	0.5	Extremo 1A	19.112	98.045	1.9E-05	-6.475	-0.7294	827.673
3646	1	Extremo 1A	19.112	119.843	1.9E-05	-6.475	-0.7295	773.201
3646	0	Extremo 2A	19.112	74.558	0.00019	-6.4468	-0.7294	879.536
3646	0.5	Extremo 2A	19.112	96.355	0.00019	-6.4468	-0.7295	836.808
3646	1	Extremo 2A	19.112	118.153	0.00019	-6.4468	-0.7296	783.181
3647	0	Extremo 1A	19.112	171.512	2.5E-05	-11.9376	-0.7294	771.119
3647	0.5	Extremo 1A	19.112	193.31	2.5E-05	-11.9376	-0.7294	679.914
3647	1	Extremo 1A	19.112	215.107	2.5E-05	-11.9376	-0.7295	577.809
3647	0	Extremo 2A	19.112	169.827	0.00025	-11.9236	-0.7293	781.114
3647	0.5	Extremo 2A	19.112	191.625	0.00025	-11.9236	-0.7295	690.752
3647	1	Extremo 2A	19.112	213.422	0.00025	-11.9236	-0.7296	589.49
3648	0	Extremo 1A	19.112	265.974	3.2E-05	-14.6267	-0.7294	573.707
3648	0.5	Extremo 1A	19.112	287.771	3.2E-05	-14.6267	-0.7294	435.27
3648	1	Extremo 1A	19.112	309.569	3.2E-05	-14.6267	-0.7295	285.935
3648	0	Extremo 2A	19.112	264.299	0.00033	-14.6439	-0.7293	585.412
3648	0.5	Extremo 2A	19.112	286.096	0.00033	-14.6439	-0.7295	447.813
3648	1	Extremo 2A	19.112	307.894	0.00033	-14.6439	-0.7296	299.316
3649	0	Extremo 1A	19.112	358.494	4.2E-05	-10.569	-0.7294	278.802
3649	0.5	Extremo 1A	19.112	380.292	4.2E-05	-10.569	-0.7294	94.1052
3649	1	Extremo 1A	19.112	402.089	4.2E-05	-10.569	-0.7295	-101.49
3649	0	Extremo 2A	19.112	356.84	0.00043	-10.6562	-0.7293	292.222
3649	0.5	Extremo 2A	19.112	378.638	0.00043	-10.6562	-0.7295	108.352
3649	1	Extremo 2A	19.112	400.435	0.00043	-10.6562	-0.7297	-86.4161
3650	0	Extremo 1A	19.112	446.268	5.4E-05	8.3394	-0.7294	-113.649
3650	0.5	Extremo 1A	19.112	468.065	5.4E-05	8.3394	-0.7294	-342.232
3650	1	Extremo 1A	19.112	489.863	5.4E-05	8.3394	-0.7295	-581.714
3650	0	Extremo 2A	19.112	444.664	0.00056	8.098	-0.7292	-98.5084
3650	0.5	Extremo 2A	19.112	466.461	0.00056	8.098	-0.7295	-326.29
3650	1	Extremo 2A	19.112	488.259	0.00056	8.098	-0.7298	-564.97
3651	0	Extremo 1A	19.112	509.999	7E-05	50.8823	-0.7294	-606.56
3651	0.5	Extremo 1A	19.112	531.796	7E-05	50.8823	-0.7295	-867.009
3651	1	Extremo 1A	19.112	553.594	7E-05	50.8823	-0.7295	-1138.36
3651	0	Extremo 2A	19.112	508.58	0.00073	50.3529	-0.7291	-589.679
3651	0.5	Extremo 2A	19.112	530.378	0.00073	50.3529	-0.7295	-849.418
3651	1	Extremo 2A	19.112	552.175	0.00073	50.3529	-0.7299	-1120.06
3652	0	Extremo 1A	19.112	406.744	9.1E-05	87.2992	-0.7294	-1198.23
3652	0.5	Extremo 1A	19.112	428.542	9.1E-05	87.2992	-0.7295	-1407.06
3652	1	Extremo 1A	19.112	450.339	9.1E-05	87.2992	-0.7295	-1626.78
3652	0	Extremo 2A	19.112	406.442	0.00095	86.5122	-0.729	-1179.61
3652	0.5	Extremo 2A	19.112	428.239	0.00095	86.5122	-0.7295	-1388.28
3652	1	Extremo 2A	19.112	450.037	0.00095	86.5122	-0.73	-1607.84
3653	0	Extremo 1A	19.112	-457.412	0.00012	-87.1092	-0.7294	-1626.77
3653	0.5	Extremo 1A	19.112	-435.614	0.00012	-87.1092	-0.7295	-1403.51
3653	1	Extremo 1A	19.112	-413.817	0.00012	-87.1092	-0.7295	-1191.16
3653	0	Extremo 2A	19.112	-452.373	0.00124	-86.9851	-0.7289	-1607.85
3653	0.5	Extremo 2A	19.112	-430.575	0.00124	-86.9851	-0.7295	-1387.11
3653	1	Extremo 2A	19.112	-408.778	0.00124	-86.9851	-0.7301	-1177.27
3654	0	Extremo 1A	19.112	-560.666	0.00015	-50.6928	-0.7294	-1131.27
3654	0.5	Extremo 1A	19.112	-538.869	0.00015	-50.6928	-0.7295	-856.386
3654	1	Extremo 1A	19.112	-517.071	0.00015	-50.6928	-0.7295	-592.401
3654	0	Extremo 2A	19.113	-554.512	0.00162	-50.8256	-0.7287	-1117.73
3654	0.5	Extremo 2A	19.113	-532.715	0.00162	-50.8256	-0.7295	-845.923
3654	1	Extremo 2A	19.113	-510.917	0.00162	-50.8256	-0.7304	-585.016
3655	0	Extremo 1A	19.112	-496.934	0.0002	-8.1508	-0.7294	-567.546
3655	0.5	Extremo 1A	19.112	-475.137	0.0002	-8.1508	-0.7295	-324.528
3655	1	Extremo 1A	19.112	-453.339	0.0002	-8.1508	-0.7296	-92.4093
3655	0	Extremo 2A	19.113	-490.596	0.00212	-8.5703	-0.7285	-560.314
3655	0.5	Extremo 2A	19.113	-468.798	0.00212	-8.5703	-0.7296	-320.465
3655	1	Extremo 2A	19.113	-447.001	0.00212	-8.5703	-0.7306	-91.515
3656	0	Extremo 1A	19.112	-409.16	0.00026	10.7556	-0.7293	-80.2393
3656	0.5	Extremo 1A	19.112	-387.362	0.00026	10.7556	-0.7295	118.891
3656	1	Extremo 1A	19.112	-365.565	0.00026	10.7556	-0.7296	307.123
3656	0	Extremo 2A	19.113	-402.774	0.00277	10.1848	-0.7282	-79.4303
3656	0.5	Extremo 2A	19.113	-380.976	0.00277	10.1848	-0.7296	116.507
3656	1	Extremo 2A	19.113	-359.179	0.00277	10.1848	-0.731	301.546
3657	0	Extremo 1A	19.112	-316.637	0.00034	14.8099	-0.7293	314.269
3657	0.5	Extremo 1A	19.112	-294.84	0.00034	14.8099	-0.7295	467.139
3657	1	Extremo 1A	19.112	-273.042	0.00034	14.8099	-0.7296	609.109
3657	0	Extremo 2A	19.113	-310.234	0.00363	14.1745	-0.7278	308.631
3657	0.5	Extremo 2A	19.113	-288.437	0.00363	14.1745	-0.7297	458.299
3657	1	Extremo 2A	19.113	-266.639	0.00363	14.1745	-0.7315	597.068
3658	0	Extremo 1A	19.112	-222.173	0.00044	12.1148	-0.7293	613.228
3658	0.5	Extremo 1A	19.112	-200.375	0.00044	12.1148	-0.7295	718.864
3658	1	Extremo 1A	19.112	-178.578	0.00044	12.1148	-0.7297	813.603
3658	0	Extremo 2A	19.112	-215.768	0.00475	11.4583	-0.7273	601.135
3658	0.5	Extremo 2A	19.112	-193.97	0.00475	11.4583	-0.7297	703.57
3658	1	Extremo 2A	19.112	-172.173	0.00475	11.4583	-0.7321	795.105
3659	0	Extremo 1A	19.112	-126.903	0.00057	6.6417	-0.7292	815.706
3659	0.5	Extremo 1A	19.112	-105.105	0.00057	6.6417	-0.7295	873.708
3659	1	Extremo 1A	19.112	-83.308	0.00057	6.6417	-0.7298	920.811
3659	0	Extremo 2A	19.112	-120.507	0.00622	5.9898	-0.7267	797.157
3659	0.5	Extremo 2A	19.112	-98.71	0.00622	5.9898	-0.7298	851.961
3659	1	Extremo 2A	19.112	-76.912	0.00622	5.9898	-0.7329	895.867
3660	0	Extremo 1A	19.112	-31.371	0.00075	0.167	-0.7291	921.48
3660	0.5	Extremo 1A	19.112	-9.574	0.00075	0.167	-0.7295	931.716
3660	1	Extremo 1A	19.112	12.224	0.00075	0.167	-0.7299	931.053
3660	0	Extremo 2A	19.111	-24.999	0.00815	-0.4554	-0.7258	896.472
3660	0.5	Extremo 2A	19.111	-3.202	0.00815	-0.4554	-0.7299	903.522
3660	1	Extremo 2A	19.111	18.596	0.00815	-0.4554	-0.734	899.674
3661	0	Extremo 1A	19.112	64.166	0.00097	-6.3298	-0.729	930.48
3661	0.5	Extremo 1A	19.112	85.964	0.00097	-6.3298	-0.7295	892.948
3661	1	Extremo 1A	19.112	107.761	0.00097	-6.3298	-0.73	844.517
3661	0	Extremo 2A	19.11	70.491	0.011	-6.8851	-0.7247	899.009

3661	0.5	Extremo 2A	19.11	92.289	0.011	-6.8851	-0.73	858.315
3661	1	Extremo 2A	19.11	114.086	0.011	-6.8851	-0.7354	806.721
3662	0	Extremo 1A	19.113	159.455	0.00127	-11.884	-0.7289	842.532
3662	0.5	Extremo 1A	19.113	181.253	0.00127	-11.884	-0.7295	757.355
3662	1	Extremo 1A	19.113	203.05	0.00127	-11.884	-0.7302	661.279
3662	0	Extremo 2A	19.108	165.69	0.014	-12.3014	-0.7232	804.591
3662	0.5	Extremo 2A	19.108	187.488	0.014	-12.3014	-0.7302	716.296
3662	1	Extremo 2A	19.108	209.285	0.014	-12.3014	-0.7372	617.103
3663	0	Extremo 1A	19.113	253.97	0.00166	-14.775	-0.7287	657.331
3663	0.5	Extremo 1A	19.113	275.767	0.00166	-14.775	-0.7295	524.897
3663	1	Extremo 1A	19.113	297.565	0.00166	-14.775	-0.7304	381.564
3663	0	Extremo 2A	19.105	260.021	0.018	-14.9118	-0.7213	612.909
3663	0.5	Extremo 2A	19.105	281.818	0.018	-14.9118	-0.7304	477.449
3663	1	Extremo 2A	19.105	303.616	0.018	-14.9118	-0.7396	331.091
3664	0	Extremo 1A	19.113	346.606	0.00217	-11.1778	-0.7285	374.681
3664	0.5	Extremo 1A	19.113	368.403	0.00217	-11.1778	-0.7296	195.929
3664	1	Extremo 1A	19.113	390.201	0.00217	-11.1778	-0.7307	6.2776
3664	0	Extremo 2A	19.1	352.266	0.024	-10.7377	-0.7187	323.788
3664	0.5	Extremo 2A	19.1	374.063	0.024	-10.7377	-0.7307	142.206
3664	1	Extremo 2A	19.1	395.861	0.024	-10.7377	-0.7427	-50.275
3665	0	Extremo 1A	19.113	434.651	0.00283	6.7026	-0.7282	-5.4589
3665	0.5	Extremo 1A	19.113	456.448	0.00283	6.7026	-0.7296	-228.234
3665	1	Extremo 1A	19.113	478.246	0.00283	6.7026	-0.731	-461.907
3665	0	Extremo 2A	19.092	439.465	0.032	8.3121	-0.7153	-62.697
3665	0.5	Extremo 2A	19.092	461.263	0.032	8.3121	-0.7311	-287.879
3665	1	Extremo 2A	19.092	483.06	0.032	8.3121	-0.7468	-523.96
3666	0	Extremo 1A	19.113	499.564	0.00371	47.3229	-0.7278	-485.843
3666	0.5	Extremo 1A	19.113	521.362	0.00371	47.3229	-0.7297	-741.074
3666	1	Extremo 1A	19.113	543.159	0.00371	47.3229	-0.7315	-1007.2
3666	0	Extremo 2A	19.081	502.521	0.041	51.1038	-0.7109	-548.926
3666	0.5	Extremo 2A	19.081	524.319	0.041	51.1038	-0.7315	-805.636
3666	1	Extremo 2A	19.081	546.116	0.041	51.1038	-0.7522	-1073.24
3667	0	Extremo 1A	19.113	404.22	0.00485	82.1605	-0.7273	-1064.74
3667	0.5	Extremo 1A	19.113	426.018	0.00485	82.1605	-0.7297	-1272.3
3667	1	Extremo 1A	19.113	447.815	0.00485	82.1605	-0.7321	-1490.76
3667	0	Extremo 2A	19.065	402.444	0.054	88.9872	-0.705	-1132.12
3667	0.5	Extremo 2A	19.065	424.242	0.054	88.9872	-0.7321	-1338.79
3667	1	Extremo 2A	19.065	446.039	0.054	88.9872	-0.7592	-1556.36
3668	0	Extremo 1A	19.112	-421.004	0.00635	-85.1696	-0.7266	-1490.8
3668	0.5	Extremo 1A	19.112	-399.206	0.00635	-85.1696	-0.7298	-1285.75
3668	1	Extremo 1A	19.112	-377.409	0.00635	-85.1696	-0.733	-1091.59
3668	0	Extremo 2A	19.041	-436.977	0.071	-77.3028	-0.6974	-1556.25
3668	0.5	Extremo 2A	19.041	-415.18	0.071	-77.3028	-0.7329	-1343.21
3668	1	Extremo 2A	19.041	-393.382	0.071	-77.3028	-0.7683	-1141.07
3669	0	Extremo 1A	19.112	-516.35	0.00831	-50.3288	-0.7258	-1034.13
3669	0.5	Extremo 1A	19.112	-494.552	0.00831	-50.3288	-0.7299	-781.406
3669	1	Extremo 1A	19.112	-472.755	0.00831	-50.3288	-0.7341	-539.579
3669	0	Extremo 2A	19.005	-537.044	0.093	-39.4339	-0.6874	-1081.96
3669	0.5	Extremo 2A	19.005	-515.246	0.093	-39.4339	-0.7338	-818.89
3669	1	Extremo 2A	19.005	-493.449	0.093	-39.4339	-0.7802	-566.716
3670	0	Extremo 1A	19.11	-451.443	0.011	-9.701	-0.7246	-515.725
3670	0.5	Extremo 1A	19.11	-429.645	0.011	-9.701	-0.73	-295.453
3670	1	Extremo 1A	19.11	-407.848	0.011	-9.701	-0.7355	-86.0797
3670	0	Extremo 2A	18.954	-473.963	0.122	3.3237	-0.6742	-541.503
3670	0.5	Extremo 2A	18.954	-452.166	0.122	3.3237	-0.735	-309.97
3670	1	Extremo 2A	18.954	-430.368	0.122	3.3237	-0.7957	-89.3368
3671	0	Extremo 1A	19.108	-363.409	0.014	8.194	-0.7231	-74.4332
3671	0.5	Extremo 1A	19.108	-341.611	0.014	8.194	-0.7302	101.822
3671	1	Extremo 1A	19.108	-319.814	0.014	8.194	-0.7374	267.178
3671	0	Extremo 2A	18.879	-386.716	0.159	22.3074	-0.657	-76.6367
3671	0.5	Extremo 2A	18.879	-364.919	0.159	22.3074	-0.7364	111.272
3671	1	Extremo 2A	18.879	-343.121	0.159	22.3074	-0.8159	288.282
3672	0	Extremo 1A	19.105	-270.794	0.019	11.8183	-0.7211	273.956
3672	0.5	Extremo 1A	19.105	-248.996	0.019	11.8183	-0.7304	403.904
3672	1	Extremo 1A	19.105	-227.199	0.019	11.8183	-0.7398	522.952
3672	0	Extremo 2A	18.771	-294.385	0.208	26.3591	-0.6345	295.917
3672	0.5	Extremo 2A	18.771	-272.588	0.208	26.3591	-0.7383	437.66
3672	1	Extremo 2A	18.771	-250.79	0.208	26.3591	-0.8421	568.505
3673	0	Extremo 1A	19.1	-176.317	0.025	8.9773	-0.7185	526.768
3673	0.5	Extremo 1A	19.1	-154.519	0.025	8.9773	-0.7307	609.477
3673	1	Extremo 1A	19.1	-132.722	0.025	8.9773	-0.743	681.288
3673	0	Extremo 2A	18.612	-199.898	0.271	23.5244	-0.6051	573.121
3673	0.5	Extremo 2A	18.612	-178.1	0.271	23.5244	-0.7405	667.62
3673	1	Extremo 2A	18.612	-156.303	0.271	23.5244	-0.8759	751.221
3674	0	Extremo 1A	19.093	-81.094	0.032	3.5167	-0.715	683.094
3674	0.5	Extremo 1A	19.093	-59.297	0.032	3.5167	-0.7311	718.192
3674	1	Extremo 1A	19.093	-37.499	0.032	3.5167	-0.7472	742.39
3674	0	Extremo 2A	18.379	-104.413	0.352	17.6978	-0.567	753.917
3674	0.5	Extremo 2A	18.379	-82.616	0.352	17.6978	-0.7432	800.674
3674	1	Extremo 2A	18.379	-60.818	0.352	17.6978	-0.9194	836.533
3675	0	Extremo 1A	19.082	14.324	0.042	-2.803	-0.7105	742.704
3675	0.5	Extremo 1A	19.082	36.122	0.042	-2.803	-0.7316	730.092
3675	1	Extremo 1A	19.082	57.919	0.042	-2.803	-0.7526	706.582
3675	0	Extremo 2A	18.036	-8.402	0.457	10.521	-0.5179	837.987
3675	0.5	Extremo 2A	18.036	13.395	0.457	10.521	-0.7464	836.739
3675	1	Extremo 2A	18.036	35.193	0.457	10.521	-0.975	824.592
3676	0	Extremo 1A	19.066	109.642	0.055	-8.9352	-0.7046	705.507
3676	0.5	Extremo 1A	19.066	131.44	0.055	-8.9352	-0.7322	645.236
3676	1	Extremo 1A	19.066	153.237	0.055	-8.9352	-0.7598	574.067
3676	0	Extremo 2A	17.527	88.049	0.589	2.7307	-0.4554	825.1
3676	0.5	Extremo 2A	17.527	109.846	0.589	2.7307	-0.75	775.626
3676	1	Extremo 2A	17.527	131.644	0.589	2.7307	-1.0446	715.254
3677	0	Extremo 1A	19.042	204.507	0.072	-13.7303	-0.6968	571.293
3677	0.5	Extremo 1A	19.042	226.305	0.072	-13.7303	-0.7329	463.59
3677	1	Extremo 1A	19.042	248.102	0.072	-13.7303	-0.7691	344.988
3677	0	Extremo 2A	16.771	184.997	0.751	-5.1035	-0.3776	714.735
3677	0.5	Extremo 2A	16.771	206.794	0.751	-5.1035	-0.7533	616.787
3677	1	Extremo 2A	16.771	228.592	0.751	-5.1035	-1.1289	507.94
3678	0	Extremo 1A	19.007	298.155	0.095	-15.0429	-0.6866	339.721
3678	0.5	Extremo 1A	19.007	319.953	0.095	-15.0429	-0.7339	185.194
3678	1	Extremo 1A	19.007	341.75	0.095	-15.0429	-0.7812	19.7687
3678	0	Extremo 2A	15.655	282.489	0.937	-11.8262	-0.2849	505.841
3678	0.5	Extremo 2A	15.655	304.286	0.937	-11.8262	-0.7535	359.147
3678	1	Extremo 2A	15.655	326.084	0.937	-11.8262	-1.2221	201.555
3679	0	Extremo 1A	18.956	388.932	0.124	-8.1046	-0.6732	10.6601
3679	0.5	Extremo 1A	18.956	410.73	0.124	-8.1046	-0.7351	-189.256
3679	1	Extremo 1A	18.956	432.527	0.124	-8.1046	-0.797	-400.07
3679	0	Extremo 2A	14.052	380.639	1.112	-14.2636	-0.181	196.594
3679	0.5	Extremo 2A	14.052	402.437	1.112	-14.2636	-0.7371	0.8246
3679	1	Extremo 2A	14.052	424.234	1.112	-14.2636	-1.2932	-205.843
3680	0	Extremo 1A	18.881	472.905	0.162	16.7509	-0.6557	-415.472
3680	0.5	Extremo 1A	18.881	494.702	0.162	16.7509	-0.7366	-657.374
3680	1	Extremo 1A	18.881	516.5	0.162	16.7509	-0.8175	-910.175
3680	0	Extremo 2A	11.921	478.748	1.182	-4.9403	-0.053	-217.126
3680	0.5	Extremo 2A	11.921	500.545	1.182	-4.9403	-0.6442	-461.949
3680	1	Extremo 2A	11.921	522.343	1.182	-4.9403	-1.2354	-717.671
3681	0	Extremo 1A	18.773	527.647	0.211	70.3528	-0.6328	-940.169
3681	0.5	Extremo 1A	18.773	549.445	0.211	70.3528	-0.7385	-1209.44
3681	1	Extremo 1A	18.773	571.242	0.211	70.3528	-0.8442	-1489.61
3681	0	Extremo 2A	9.556	554.981	1.175	26.5522	0.2226	-748.053
3681	0.5	Extremo 2A	9.556	576.778	1.175	26.5522	-0.3647	-1030.99
3681	1	Extremo 2A	9.556	598.576	1.175	26.5522	-0.9521	-1324.83
3682	0	Extremo 1A	18.614	396.257	0.276	121.042	-0.6029	-1557.33
3682	0.5	Extremo 1A	18.614	418.054	0.276	121.042	-0.7408	-1760.91
3682	1	Extremo 1A	18.614	439.852	0.276	121.042	-0.8787	-1975.39
3682	0	Extremo 2A	7.192	443.515	1.183	59.6447	0.506	-1399.6
3682	0.5	Extremo 2A	7.192	465.313	1.183	59.6447	-0.0853	-1626.81
3682	1	Extremo 2A	7.192	487.11	1.183	59.6447	-0.6765	-1864.91
3683	0	Extremo 1A	18.382	-568.5	0.359	-56.9057	-0.5641	-1974.25
3683	0.5	Extremo 1A	18.382	-546.703	0.359	-56.9057	-0.7436	-1695.45
3683	1	Extremo 1A	18.382	-524.905	0.359	-56.9057	-0.9231	-1427.55
3683	0	Extremo 2A	5.061	-502.066	1.113	-120.585	0.5639	-1872.24
3683	0.5	Extremo 2A	5.061	-480.269	1.113	-120.585	0.0076	-1626.65
3683	1	Extremo 2A	5.061	-458.471	1.113	-120.585	-0.5487	-1391.97
3684	0	Extremo 1A	18.039	-699.377	0.466	-6.9524	-0.5141	-1357.41
3684	0.5	Extremo 1A	18.039	-677.58	0.466	-6.9524	-0.7469	-1013.18
3684	1	Extremo 1A	18.039	-655.782	0.466	-6.9524	-0.9797	-679.835
3684	0	Extremo 2A	3.458	-632.359	0.938	-70.1032	0.4929	-1327.23
3684	0.5	Extremo 2A	3.458	-610.561	0.938	-70.1032	0.024	-1016.5
3684	1	Extremo 2A	3.458	-588.764	0.938	-70.1032	-0.4449	-716.668
3685	0	Extremo 1A	17.529	-643.418	0.6	44.8992	-0.4504	-646.994
3685	0.5	Extremo 1A	17.529	-621.62	0.6	44.8992	-0.7506	-330.734
3685	1	Extremo 1A	17.529	-599.823	0.6	44.8992	-1.0509	-25.3734
3685	0	Extremo 2A	2.342	-579.296	0.752	-16.3698	0.3999	-687.199

3685	0.5	Extremo 2A	2.342	-557.498	0.752	-16.3698	0.0238	-403.001
3685	1	Extremo 2A	2.342	-535.701	0.752	-16.3698	-0.3524	-129.701
3686	0	Extremo 1A	16.773	-557.068	0.766	66.3489	-0.3711	-6.3398
3686	0.5	Extremo 1A	16.773	-535.271	0.766	66.3489	-0.7541	266.745
3686	1	Extremo 1A	16.773	-513.473	0.766	66.3489	-1.1371	528.931
3686	0	Extremo 2A	1.586	-496.167	0.59	8.4697	0.3157	-114.345
3686	0.5	Extremo 2A	1.586	-474.369	0.59	8.4697	0.0205	128.289
3686	1	Extremo 2A	1.586	-452.572	0.59	8.4697	-0.2748	360.024
3687	0	Extremo 1A	15.655	-461.775	0.956	67.0487	-0.2764	542.865
3687	0.5	Extremo 1A	15.655	-439.977	0.956	67.0487	-0.7546	768.302
3687	1	Extremo 1A	15.655	-418.18	0.956	67.0487	-1.2328	982.842
3687	0	Extremo 2A	1.078	-405.599	0.459	15.3071	0.2462	369.024
3687	0.5	Extremo 2A	1.078	-383.801	0.459	15.3071	0.0169	566.374
3687	1	Extremo 2A	1.078	-362.004	0.459	15.3071	-0.2125	752.826
3688	0	Extremo 1A	14.048	-359.276	1.137	54.6654	-0.1698	994.446
3688	0.5	Extremo 1A	14.048	-337.479	1.137	54.6654	-0.7384	1168.64
3688	1	Extremo 1A	14.048	-315.681	1.137	54.6654	-1.3071	1331.93
3688	0	Extremo 2A	0.735	-311.958	0.355	13.9056	0.191	757.901
3688	0.5	Extremo 2A	0.735	-290.16	0.355	13.9056	0.0136	908.43
3688	1	Extremo 2A	0.735	-268.363	0.355	13.9056	-0.1637	1048.06
3689	0	Extremo 1A	11.913	-247.083	1.215	31.0136	-0.0384	1341.8
3689	0.5	Extremo 1A	11.913	-225.285	1.215	31.0136	-0.646	1459.89
3689	1	Extremo 1A	11.913	-203.488	1.215	31.0136	-1.2535	1567.09
3689	0	Extremo 2A	0.502	-217.07	0.274	9.0766	0.1477	1050.59
3689	0.5	Extremo 2A	0.502	-195.273	0.274	9.0766	0.0109	1153.68
3689	1	Extremo 2A	0.502	-173.475	0.274	9.0766	-0.126	1245.86
3690	0	Extremo 1A	9.541	-124.207	1.218	-3.3951	0.2418	1571.32
3690	0.5	Extremo 1A	9.541	-102.409	1.218	-3.3951	-0.367	1627.97
3690	1	Extremo 1A	9.541	-80.612	1.218	-3.3951	-0.9758	1673.73
3690	0	Extremo 2A	0.344	-121.755	0.211	2.9866	0.1143	1246.62
3690	0.5	Extremo 2A	0.344	-99.957	0.211	2.9866	0.0086	1302.05
3690	1	Extremo 2A	0.344	-78.16	0.211	2.9866	-0.0971	1346.58
3691	0	Extremo 1A	7.165	-1.434	1.239	-37.7259	0.5311	1668.66
3691	0.5	Extremo 1A	7.165	20.363	1.239	-37.7259	-0.0882	1663.93
3691	1	Extremo 1A	7.165	42.161	1.239	-37.7259	-0.7075	1648.3
3691	0	Extremo 2A	0.235	-26.405	0.164	-3.1725	0.0887	1345.83
3691	0.5	Extremo 2A	0.235	-4.608	0.164	-3.1725	0.0067	1353.58
3691	1	Extremo 2A	0.235	17.19	0.164	-3.1725	-0.0753	1350.44
3692	0	Extremo 1A	5.016	110.334	1.186	-61.0728	0.5968	1637.35
3692	0.5	Extremo 1A	5.016	132.132	1.186	-61.0728	0.0038	1576.73
3692	1	Extremo 1A	5.016	153.929	1.186	-61.0728	-0.5891	1505.21
3692	0	Extremo 2A	0.161	68.594	0.128	-8.2346	0.0692	1348
3692	0.5	Extremo 2A	0.161	90.391	0.128	-8.2346	0.0051	1308.26
3692	1	Extremo 2A	0.161	112.189	0.128	-8.2346	-0.0589	1257.61
3693	0	Extremo 1A	3.386	211.733	1.034	-72.7302	0.5359	1492.05
3693	0.5	Extremo 1A	3.386	233.53	1.034	-72.7302	0.0191	1380.73
3693	1	Extremo 1A	3.386	255.328	1.034	-72.7302	-0.4978	1258.52
3693	0	Extremo 2A	0.109	162.584	0.101	-10.1864	0.0545	1252.93
3693	0.5	Extremo 2A	0.109	184.382	0.101	-10.1864	0.0038	1166.19
3693	1	Extremo 2A	0.109	206.179	0.101	-10.1864	-0.0469	1068.55
3694	0	Extremo 1A	2.228	304.253	0.877	-71.0801	0.455	1242.14
3694	0.5	Extremo 1A	2.228	326.05	0.877	-71.0801	0.0164	1084.56
3694	1	Extremo 1A	2.228	347.848	0.877	-71.0801	-0.4222	916.089
3694	0	Extremo 2A	0.074	254.059	0.082	-5.1712	0.0437	1060.45
3694	0.5	Extremo 2A	0.074	275.857	0.082	-5.1712	0.0026	927.971
3694	1	Extremo 2A	0.074	297.654	0.082	-5.1712	-0.0384	784.593
3695	0	Extremo 1A	1.409	379.216	0.752	-52.6066	0.3827	892.083
3695	0.5	Extremo 1A	1.409	401.014	0.752	-52.6066	0.0064	697.025
3695	1	Extremo 1A	1.409	422.811	0.752	-52.6066	-0.3698	491.069
3695	0	Extremo 2A	0.048	334.036	0.068	11.1498	0.0355	769.296
3695	0.5	Extremo 2A	0.048	355.833	0.068	11.1498	0.0012	596.829
3695	1	Extremo 2A	0.048	377.631	0.068	11.1498	-0.033	413.463
3696	0	Extremo 1A	0.806	373.451	0.657	-29.1963	0.3111	449.923
3696	0.5	Extremo 1A	0.806	395.249	0.657	-29.1963	-0.0173	257.748
3696	1	Extremo 1A	0.806	417.046	0.657	-29.1963	-0.3458	54.6744
3696	0	Extremo 2A	0.029	339.067	0.059	26.7213	0.0282	380.774
3696	0.5	Extremo 2A	0.029	360.864	0.059	26.7213	-0.0012	205.791
3696	1	Extremo 2A	0.029	382.662	0.059	26.7213	-0.0305	19.9097
3697	0	Extremo 1A	0.338	31.123	0.517	-85.4802	0.1966	39.5121
3697	0.5	Extremo 1A	0.338	52.921	0.517	-85.4802	-0.0619	18.5011
3697	1	Extremo 1A	0.338	74.718	0.517	-85.4802	-0.3205	-13.4086
3697	0	Extremo 2A	0.012	7.893	0.046	-44.9133	0.0176	11.2624
3697	0.5	Extremo 2A	0.012	29.69	0.046	-44.9133	-0.0053	1.8667
3697	1	Extremo 2A	0.012	51.488	0.046	-44.9133	-0.0281	-18.4278
3698	0	Extremo 1A	0.583	203.336	0.858	-0.4771	0.3049	53.9256
3698	0.5	Extremo 1A	0.583	225.134	0.858	-0.4771	-0.1243	-53.1918
3698	1	Extremo 1A	0.583	246.931	0.858	-0.4771	-0.5536	-171.208
3698	0	Extremo 2A	0.583	203.336	0.858	-0.4771	0.3049	53.9256
3698	0.5	Extremo 2A	0.583	225.134	0.858	-0.4771	-0.1243	-53.1918
3698	1	Extremo 2A	0.583	246.931	0.858	-0.4771	-0.5536	-171.208
3699	0	Extremo 1A	1.784	-409.969	0.329	-2.2539	-0.2151	-169.068
3699	0.5	Extremo 1A	1.784	-388.171	0.329	-2.2539	-0.3797	30.4675
3699	1	Extremo 1A	1.784	-366.374	0.329	-2.2539	-0.5442	219.104
3699	0	Extremo 2A	1.784	-409.969	0.329	-2.2539	-0.2151	-169.068
3699	0.5	Extremo 2A	1.784	-388.172	0.329	-2.2539	-0.3797	30.4675
3699	1	Extremo 2A	1.784	-366.374	0.329	-2.2539	-0.5442	219.104
3700	0	Extremo 1A	3.173	-168.746	-0.079	-2.9235	-0.5259	173.428
3700	0.5	Extremo 1A	3.173	-146.949	-0.079	-2.9235	-0.4866	252.352
3700	1	Extremo 1A	3.173	-125.151	-0.079	-2.9235	-0.4473	320.377
3700	0	Extremo 2A	3.173	-168.746	-0.079	-2.9235	-0.5259	173.428
3700	0.5	Extremo 2A	3.173	-146.949	-0.079	-2.9235	-0.4866	252.352
3700	1	Extremo 2A	3.173	-125.151	-0.079	-2.9235	-0.4473	320.377
3701	0	Extremo 1A	4.501	-54.914	-0.263	-2.2359	-0.6784	303.964
3701	0.5	Extremo 1A	4.501	-33.116	-0.263	-2.2359	-0.547	325.971
3701	1	Extremo 1A	4.501	-11.319	-0.263	-2.2359	-0.4157	337.08
3701	0	Extremo 2A	4.501	-54.914	-0.263	-2.2359	-0.6784	303.964
3701	0.5	Extremo 2A	4.501	-33.116	-0.263	-2.2359	-0.547	325.971
3701	1	Extremo 2A	4.501	-11.319	-0.263	-2.2359	-0.4157	337.08
3702	0	Extremo 1A	5.677	36.844	-0.328	-1.4722	-0.7612	333.34
3702	0.5	Extremo 1A	5.677	58.641	-0.328	-1.4722	-0.5973	309.469
3702	1	Extremo 1A	5.677	80.439	-0.328	-1.4722	-0.4333	274.699
3702	0	Extremo 2A	5.677	36.843	-0.328	-1.4722	-0.7612	333.34
3702	0.5	Extremo 2A	5.677	58.641	-0.328	-1.4722	-0.5973	309.469
3702	1	Extremo 2A	5.677	80.438	-0.328	-1.4722	-0.4333	274.699
3703	0	Extremo 1A	6.678	125.907	-0.339	-0.3908	-0.8085	273.777
3703	0.5	Extremo 1A	6.678	147.705	-0.339	-0.3908	-0.6388	205.374
3703	1	Extremo 1A	6.678	169.502	-0.339	-0.3908	-0.4691	126.072
3703	0	Extremo 2A	6.678	125.907	-0.339	-0.3908	-0.8085	273.777
3703	0.5	Extremo 2A	6.678	147.705	-0.339	-0.3908	-0.6388	205.374
3703	1	Extremo 2A	6.678	169.502	-0.339	-0.3908	-0.4691	126.072
3704	0	Extremo 1A	7.505	213.521	-0.324	2.4005	-0.832	127.395
3704	0.5	Extremo 1A	7.505	235.319	-0.324	2.4005	-0.6699	15.1852
3704	1	Extremo 1A	7.505	257.116	-0.324	2.4005	-0.5077	-107.923
3704	0	Extremo 2A	7.505	213.521	-0.324	2.4005	-0.832	127.395
3704	0.5	Extremo 2A	7.505	235.318	-0.324	2.4005	-0.6699	15.1855
3704	1	Extremo 2A	7.505	257.116	-0.324	2.4005	-0.5077	-107.923
3705	0	Extremo 1A	8.17	306.545	-0.295	7.5493	-0.8393	-94.3177
3705	0.5	Extremo 1A	8.17	328.342	-0.295	7.5493	-0.6915	-253.039
3705	1	Extremo 1A	8.17	350.14	-0.295	7.5493	-0.5438	-422.66
3705	0	Extremo 2A	8.17	306.544	-0.295	7.5493	-0.8393	-94.3173
3705	0.5	Extremo 2A	8.17	328.342	-0.295	7.5493	-0.6915	-253.039
3705	1	Extremo 2A	8.17	350.139	-0.295	7.5493	-0.5438	-422.659
3706	0	Extremo 1A	8.695	471.572	-0.26	12.3814	-0.8361	-362.995
3706	0.5	Extremo 1A	8.695	493.369	-0.26	12.3814	-0.706	-604.23
3706	1	Extremo 1A	8.695	515.167	-0.26	12.3814	-0.5759	-856.364
3706	0	Extremo 2A	8.695	471.571	-0.26	12.3814	-0.8361	-362.994
3706	0.5	Extremo 2A	8.695	493.369	-0.26	12.3814	-0.706	-604.229
3706	1	Extremo 2A	8.695	515.166	-0.26	12.3814	-0.5759	-856.363
3707	0	Extremo 1A	9.103	1054.89	-0.223	11.1635	-0.8272	-697.352
3707	0.5	Extremo 1A	9.103	1076.69	-0.223	11.1635	-0.7155	-1230.25
3707	1	Extremo 1A	9.103	1098.49	-0.223	11.1635	-0.6037	-1774.04
3707	0	Extremo 2A	9.103	1054.89	-0.223	11.1635	-0.8272	-697.352
3707	0.5	Extremo 2A	9.103	1076.69	-0.223	11.1635	-0.7155	-1230.25
3707	1	Extremo 2A	9.103	1098.49	-0.223	11.1635	-0.6037	-1774.04
3708	0	Extremo 1A	9.416	-1201.64	-0.188	5.7114	-0.8157	-1772.76
3708	0.5	Extremo 1A	9.416	-1179.84	-0.188	5.7114	-0.7215	-1177.39
3708	1	Extremo 1A	9.416	-1158.04	-0.188	5.7114	-0.6274	-592.925
3708	0	Extremo 2A	9.416	-1201.64	-0.188	5.7114	-0.8157	-1772.76
3708	0.5	Extremo 2A	9.416	-1179.84	-0.188	5.7114	-0.7215	-1177.39
3708	1	Extremo 2A	9.416	-1158.04	-0.188	5.7114	-0.6274	-592.925
3709	0	Extremo 1A	9.654	-618.161	-0.156	4.1788	-0.8035	-749.349
3709	0.5	Extremo 1A	9.654	-596.363	-0.156	4.1788	-0.7253	-445.718
3709	1	Extremo 1A	9.654	-574.566	-0.156	4.1788	-0.6471	-152.986
3709	0	Extremo 2A	9.654	-618.16	-0.156	4.1788	-0.8035	-749.348

3709	0.5	Extremo 2A	9.654	-596.363	-0.156	4.1788	-0.7253	-445.717
3709	1	Extremo 2A	9.654	-574.565	-0.156	4.1788	-0.6471	-152.985
3710	0	Extremo 1A	9.833	-452.765	-0.128	8.2829	-0.7918	-209.968
3710	0.5	Extremo 1A	9.833	-430.967	-0.128	8.2829	-0.7276	10.9651
3710	1	Extremo 1A	9.833	-409.17	-0.128	8.2829	-0.6635	220.999
3710	0	Extremo 2A	9.833	-452.764	-0.128	8.2829	-0.7918	-209.968
3710	0.5	Extremo 2A	9.833	-430.967	-0.128	8.2829	-0.7276	10.9652
3710	1	Extremo 2A	9.833	-409.169	-0.128	8.2829	-0.6635	220.999
3711	0	Extremo 1A	9.968	-359.005	-0.104	12.067	-0.7812	210.22
3711	0.5	Extremo 1A	9.968	-337.208	-0.104	12.067	-0.729	384.273
3711	1	Extremo 1A	9.968	-315.41	-0.104	12.067	-0.6768	547.427
3711	0	Extremo 2A	9.968	-359.005	-0.104	12.067	-0.7812	210.22
3711	0.5	Extremo 2A	9.968	-337.207	-0.104	12.067	-0.729	384.273
3711	1	Extremo 2A	9.968	-315.41	-0.104	12.067	-0.6768	547.427
3712	0	Extremo 1A	10.069	-269.978	-0.084	12.4776	-0.7719	548.995
3712	0.5	Extremo 1A	10.069	-248.181	-0.084	12.4776	-0.7297	678.535
3712	1	Extremo 1A	10.069	-226.383	-0.084	12.4776	-0.6876	797.176
3712	0	Extremo 2A	10.069	-269.978	-0.084	12.4776	-0.7719	548.995
3712	0.5	Extremo 2A	10.069	-248.18	-0.084	12.4776	-0.7297	678.534
3712	1	Extremo 2A	10.069	-226.383	-0.084	12.4776	-0.6876	797.175
3713	0	Extremo 1A	10.145	-178.504	-0.068	9.689	-0.764	800.334
3713	0.5	Extremo 1A	10.145	-156.706	-0.068	9.689	-0.7301	884.136
3713	1	Extremo 1A	10.145	-134.909	-0.068	9.689	-0.6963	957.04
3713	0	Extremo 2A	10.145	-178.504	-0.068	9.689	-0.764	800.334
3713	0.5	Extremo 2A	10.145	-156.706	-0.068	9.689	-0.7301	884.136
3713	1	Extremo 2A	10.145	-134.909	-0.068	9.689	-0.6963	957.04
3714	0	Extremo 1A	10.201	-85.432	-0.054	4.9006	-0.7573	959.147
3714	0.5	Extremo 1A	10.201	-63.634	-0.054	4.9006	-0.7303	996.414
3714	1	Extremo 1A	10.201	-41.837	-0.054	4.9006	-0.7033	1022.78
3714	0	Extremo 2A	10.201	-85.431	-0.054	4.9006	-0.7573	959.147
3714	0.5	Extremo 2A	10.201	-63.634	-0.054	4.9006	-0.7303	996.413
3714	1	Extremo 2A	10.201	-41.836	-0.054	4.9006	-0.7033	1022.78
3715	0	Extremo 1A	10.242	8.248	-0.043	-0.7387	-0.7519	1023.31
3715	0.5	Extremo 1A	10.242	30.046	-0.043	-0.7387	-0.7303	1013.74
3715	1	Extremo 1A	10.242	51.843	-0.043	-0.7387	-0.7088	993.266
3715	0	Extremo 2A	10.242	8.248	-0.043	-0.7387	-0.7519	1023.31
3715	0.5	Extremo 2A	10.242	30.046	-0.043	-0.7387	-0.7303	1013.74
3715	1	Extremo 2A	10.242	51.843	-0.043	-0.7387	-0.7088	993.265
3716	0	Extremo 1A	10.273	101.846	-0.034	-6.2521	-0.7474	992.139
3716	0.5	Extremo 1A	10.273	123.643	-0.034	-6.2521	-0.7303	935.766
3716	1	Extremo 1A	10.273	145.441	-0.034	-6.2521	-0.7132	868.495
3716	0	Extremo 2A	10.273	101.846	-0.034	-6.2521	-0.7474	992.138
3716	0.5	Extremo 2A	10.273	123.643	-0.034	-6.2521	-0.7303	935.766
3716	1	Extremo 2A	10.273	145.441	-0.034	-6.2521	-0.7132	868.495
3717	0	Extremo 1A	10.296	194.631	-0.027	-10.6167	-0.7438	865.776
3717	0.5	Extremo 1A	10.296	216.429	-0.027	-10.6167	-0.7302	763.011
3717	1	Extremo 1A	10.296	238.226	-0.027	-10.6167	-0.7167	649.347
3717	0	Extremo 2A	10.296	194.632	-0.027	-10.6167	-0.7438	865.775
3717	0.5	Extremo 2A	10.296	216.429	-0.027	-10.6167	-0.7302	763.01
3717	1	Extremo 2A	10.296	238.227	-0.027	-10.6167	-0.7167	649.346
3718	0	Extremo 1A	10.312	285.48	-0.021	-12.5479	-0.7408	645.622
3718	0.5	Extremo 1A	10.312	307.278	-0.021	-12.5479	-0.7301	497.433
3718	1	Extremo 1A	10.312	329.075	-0.021	-12.5479	-0.7194	338.345
3718	0	Extremo 2A	10.312	285.48	-0.021	-12.5479	-0.7408	645.621
3718	0.5	Extremo 2A	10.312	307.278	-0.021	-12.5479	-0.7301	497.432
3718	1	Extremo 2A	10.312	329.075	-0.021	-12.5479	-0.7194	338.343
3719	0	Extremo 1A	10.325	373.4	-0.017	-10.6613	-0.7385	336.656
3719	0.5	Extremo 1A	10.325	395.198	-0.017	-10.6613	-0.73	144.506
3719	1	Extremo 1A	10.325	416.995	-0.017	-10.6613	-0.7216	-58.542
3719	0	Extremo 2A	10.325	373.4	-0.017	-10.6613	-0.7385	336.655
3719	0.5	Extremo 2A	10.325	395.198	-0.017	-10.6613	-0.73	144.505
3719	1	Extremo 2A	10.325	416.995	-0.017	-10.6613	-0.7216	-58.5433
3720	0	Extremo 1A	10.334	466.674	-0.013	-4.7328	-0.7366	-45.7439
3720	0.5	Extremo 1A	10.334	488.471	-0.013	-4.7328	-0.7299	-284.53
3720	1	Extremo 1A	10.334	510.269	-0.013	-4.7328	-0.7233	-534.215
3720	0	Extremo 2A	10.334	466.674	-0.013	-4.7328	-0.7366	-45.7452
3720	0.5	Extremo 2A	10.334	488.471	-0.013	-4.7328	-0.7299	-284.532
3720	1	Extremo 2A	10.334	510.269	-0.013	-4.7328	-0.7233	-534.217
3721	0	Extremo 1A	10.34	642.697	-0.01	1.7246	-0.7351	-467.715
3721	0.5	Extremo 1A	10.34	664.495	-0.01	1.7246	-0.7299	-794.513
3721	1	Extremo 1A	10.34	686.292	-0.01	1.7246	-0.7246	-1132.21
3721	0	Extremo 2A	10.34	642.697	-0.01	1.7246	-0.7351	-467.717
3721	0.5	Extremo 2A	10.34	664.495	-0.01	1.7246	-0.7299	-794.515
3721	1	Extremo 2A	10.34	686.292	-0.01	1.7246	-0.7246	-1132.21
3722	0	Extremo 1A	10.345	1302.35	-0.00823	1.7768	-0.7339	-950.313
3722	0.5	Extremo 1A	10.345	1324.14	-0.00823	1.7768	-0.7298	-1606.94
3722	1	Extremo 1A	10.345	1345.94	-0.00823	1.7768	-0.7257	-2274.46
3722	0	Extremo 2A	10.345	1302.35	-0.00823	1.7768	-0.7339	-950.315
3722	0.5	Extremo 2A	10.345	1324.14	-0.00823	1.7768	-0.7298	-1606.94
3722	1	Extremo 2A	10.345	1345.94	-0.00823	1.7768	-0.7257	-2274.46
3723	0	Extremo 1A	10.349	-1323.67	-0.00646	-2.757	-0.733	-2274.55
3723	0.5	Extremo 1A	10.349	-1301.87	-0.00646	-2.757	-0.7297	-1618.16
3723	1	Extremo 1A	10.349	-1280.08	-0.00646	-2.757	-0.7265	-972.673
3723	0	Extremo 2A	10.349	-1323.67	-0.00646	-2.757	-0.733	-2274.55
3723	0.5	Extremo 2A	10.349	-1301.87	-0.00646	-2.757	-0.7297	-1618.16
3723	1	Extremo 2A	10.349	-1280.08	-0.00646	-2.757	-0.7265	-972.674
3724	0	Extremo 1A	10.351	-664.024	-0.00508	-2.7017	-0.7322	-1154.75
3724	0.5	Extremo 1A	10.351	-642.227	-0.00508	-2.7017	-0.7297	-828.187
3724	1	Extremo 1A	10.351	-620.429	-0.00508	-2.7017	-0.7271	-512.523
3724	0	Extremo 2A	10.351	-664.025	-0.00508	-2.7017	-0.7322	-1154.75
3724	0.5	Extremo 2A	10.351	-642.227	-0.00508	-2.7017	-0.7297	-828.188
3724	1	Extremo 2A	10.351	-620.43	-0.00508	-2.7017	-0.7271	-512.523
3725	0	Extremo 1A	10.353	-488.005	-0.00399	3.763	-0.7316	-579.204
3725	0.5	Extremo 1A	10.353	-466.207	-0.00399	3.763	-0.7296	-340.651
3725	1	Extremo 1A	10.353	-444.41	-0.00399	3.763	-0.7276	-112.997
3725	0	Extremo 2A	10.353	-488.005	-0.00399	3.763	-0.7316	-579.205
3725	0.5	Extremo 2A	10.353	-466.208	-0.00399	3.763	-0.7296	-340.651
3725	1	Extremo 2A	10.353	-444.41	-0.00399	3.763	-0.7276	-112.997
3726	0	Extremo 1A	10.355	-394.739	-0.00313	9.7051	-0.7312	-125.979
3726	0.5	Extremo 1A	10.355	-372.941	-0.00313	9.7051	-0.7296	65.9411
3726	1	Extremo 1A	10.355	-351.144	-0.00313	9.7051	-0.728	246.962
3726	0	Extremo 2A	10.355	-394.739	-0.00313	9.7051	-0.7312	-125.979
3726	0.5	Extremo 2A	10.355	-372.942	-0.00313	9.7051	-0.7296	65.9413
3726	1	Extremo 2A	10.355	-351.144	-0.00313	9.7051	-0.728	246.963
3727	0	Extremo 1A	10.356	-306.832	-0.00245	11.6156	-0.7308	248.462
3727	0.5	Extremo 1A	10.356	-285.035	-0.00245	11.6156	-0.7296	396.429
3727	1	Extremo 1A	10.356	-263.237	-0.00245	11.6156	-0.7283	533.497
3727	0	Extremo 2A	10.356	-306.833	-0.00245	11.6156	-0.7308	248.463
3727	0.5	Extremo 2A	10.356	-285.035	-0.00245	11.6156	-0.7296	396.43
3727	1	Extremo 2A	10.356	-263.238	-0.00245	11.6156	-0.7283	533.498
3728	0	Extremo 1A	10.356	-216.008	-0.00192	9.7261	-0.7305	537.025
3728	0.5	Extremo 1A	10.356	-194.211	-0.00192	9.7261	-0.7295	639.58
3728	1	Extremo 1A	10.356	-172.413	-0.00192	9.7261	-0.7286	731.236
3728	0	Extremo 2A	10.356	-216.009	-0.00192	9.7261	-0.7305	537.026
3728	0.5	Extremo 2A	10.356	-194.211	-0.00192	9.7261	-0.7295	639.581
3728	1	Extremo 2A	10.356	-172.414	-0.00192	9.7261	-0.7286	731.238
3729	0	Extremo 1A	10.357	-123.268	-0.00151	5.435	-0.7303	733.745
3729	0.5	Extremo 1A	10.357	-101.471	-0.00151	5.435	-0.7295	789.93
3729	1	Extremo 1A	10.357	-79.673	-0.00151	5.435	-0.7288	835.216
3729	0	Extremo 2A	10.357	-123.269	-0.00151	5.435	-0.7303	733.747
3729	0.5	Extremo 2A	10.357	-101.471	-0.00151	5.435	-0.7295	789.932
3729	1	Extremo 2A	10.357	-79.674	-0.00151	5.435	-0.7288	835.218
3730	0	Extremo 1A	10.357	-29.754	-0.00118	0.0527	-0.7301	836.11
3730	0.5	Extremo 1A	10.357	-7.956	-0.00118	0.0527	-0.7295	845.538
3730	1	Extremo 1A	10.357	13.841	-0.00118	0.0527	-0.7289	844.066
3730	0	Extremo 2A	10.357	-29.754	-0.00118	0.0527	-0.7301	836.112
3730	0.5	Extremo 2A	10.357	-7.957	-0.00118	0.0527	-0.7295	845.54
3730	1	Extremo 2A	10.357	13.841	-0.00118	0.0527	-0.7289	844.069
3731	0	Extremo 1A	10.358	63.771	-0.00093	-5.3498	-0.73	843.271
3731	0.5	Extremo 1A	10.358	85.568	-0.00093	-5.3498	-0.7295	805.937
3731	1	Extremo 1A	10.358	107.366	-0.00093	-5.3498	-0.729	757.703
3731	0	Extremo 2A	10.358	63.77	-0.00093	-5.3498	-0.73	843.274
3731	0.5	Extremo 2A	10.358	85.568	-0.00093	-5.3498	-0.7295	805.94
3731	1	Extremo 2A	10.358	107.365	-0.00093	-5.3498	-0.729	757.706
3732	0	Extremo 1A	10.358	156.547	-0.00073	-9.7086	-0.7299	755.292
3732	0.5	Extremo 1A	10.358	178.345	-0.00073	-9.7086	-0.7295	671.569
3732	1	Extremo 1A	10.358	200.142	-0.00073	-9.7086	-0.7291	576.947
3732	0	Extremo 2A	10.358	156.547	-0.00073	-9.7086	-0.7299	755.295
3732	0.5	Extremo 2A	10.358	178.344	-0.00073	-9.7086	-0.7295	671.572
3732	1	Extremo 2A	10.358	200.142	-0.00073	-9.7086	-0.7291	576.951
3733	0	Extremo 1A	10.358	247.454	-0.00057	-11.7321	-0.7298	573.492
3733	0.5	Extremo 1A	10.358	269.252	-0.00057	-11.7321	-0.7295	444.316
3733	1	Extremo 1A	10.358	291.049	-0.00057	-11.7321	-0.7292	304.241
3733	0	Extremo 2A	10.358	247.454	-0.00057	-11.7321	-0.7298	573.496

3733	0.5	Extremo 2A	10.358	269.251	-0.00057	-11.7321	-0.7295	444.32
3733	1	Extremo 2A	10.358	291.049	-0.00057	-11.7321	-0.7292	304.245
3734	0	Extremo 1A	10.358	335.5	-0.00045	-10.0402	-0.7297	302.685
3734	0.5	Extremo 1A	10.358	357.298	-0.00045	-10.0402	-0.7295	129.485
3734	1	Extremo 1A	10.358	379.095	-0.00045	-10.0402	-0.7292	-54.6131
3734	0	Extremo 2A	10.358	335.5	-0.00045	-10.0403	-0.7297	302.689
3734	0.5	Extremo 2A	10.358	357.297	-0.00045	-10.0403	-0.7295	129.49
3734	1	Extremo 2A	10.358	379.095	-0.00045	-10.0403	-0.7292	-54.6081
3735	0	Extremo 1A	10.358	428.65	-0.00035	-4.373	-0.7296	-42.2401
3735	0.5	Extremo 1A	10.358	450.447	-0.00035	-4.373	-0.7295	-262.014
3735	1	Extremo 1A	10.358	472.245	-0.00035	-4.373	-0.7293	-492.688
3735	0	Extremo 2A	10.358	428.649	-0.00035	-4.3731	-0.7296	-42.2352
3735	0.5	Extremo 2A	10.358	450.447	-0.00035	-4.3731	-0.7295	-262.009
3735	1	Extremo 2A	10.358	472.244	-0.00035	-4.3731	-0.7293	-492.682
3736	0	Extremo 1A	10.358	601.606	-0.00027	1.9146	-0.7296	-428.498
3736	0.5	Extremo 1A	10.358	623.403	-0.00027	1.9146	-0.7295	-734.75
3736	1	Extremo 1A	10.358	645.201	-0.00027	1.9146	-0.7293	-1051.9
3736	0	Extremo 2A	10.358	601.605	-0.00027	1.9146	-0.7296	-428.493
3736	0.5	Extremo 2A	10.358	623.403	-0.00027	1.9146	-0.7295	-734.745
3736	1	Extremo 2A	10.358	645.2	-0.00027	1.9146	-0.7293	-1051.9
3737	0	Extremo 1A	10.358	1241.41	-0.00022	2.1296	-0.7296	-876.276
3737	0.5	Extremo 1A	10.358	1263.21	-0.00022	2.1296	-0.7295	-1502.43
3737	1	Extremo 1A	10.358	1285.01	-0.00022	2.1296	-0.7294	-2139.49
3737	0	Extremo 2A	10.358	1241.41	-0.00022	2.1296	-0.7296	-876.271
3737	0.5	Extremo 2A	10.358	1263.21	-0.00022	2.1296	-0.7295	-1502.43
3737	1	Extremo 2A	10.358	1285.01	-0.00022	2.1296	-0.7294	-2139.48
3738	0	Extremo 1A	10.358	-1290.89	-0.00017	-2.0365	-0.7295	-2139.47
3738	0.5	Extremo 1A	10.358	-1269.09	-0.00017	-2.0365	-0.7295	-1499.48
3738	1	Extremo 1A	10.358	-1247.3	-0.00017	-2.0365	-0.7294	-870.378
3738	0	Extremo 2A	10.358	-1290.89	-0.00017	-2.0365	-0.7295	-2139.47
3738	0.5	Extremo 2A	10.358	-1269.09	-0.00017	-2.0365	-0.7295	-1499.47
3738	1	Extremo 2A	10.358	-1247.29	-0.00017	-2.0365	-0.7294	-870.374
3739	0	Extremo 1A	10.358	-651.084	-0.00013	-1.8221	-0.7295	-1045.97
3739	0.5	Extremo 1A	10.358	-629.287	-0.00013	-1.8221	-0.7295	-725.881
3739	1	Extremo 1A	10.358	-607.489	-0.00013	-1.8221	-0.7294	-416.687
3739	0	Extremo 2A	10.358	-651.082	-0.00013	-1.8221	-0.7295	-1045.97
3739	0.5	Extremo 2A	10.358	-629.284	-0.00013	-1.8221	-0.7295	-725.878
3739	1	Extremo 2A	10.358	-607.487	-0.00013	-1.8221	-0.7294	-416.685
3740	0	Extremo 1A	10.358	-478.128	-0.0001	4.4642	-0.7295	-480.847
3740	0.5	Extremo 1A	10.358	-456.33	-0.0001	4.4642	-0.7295	-247.233
3740	1	Extremo 1A	10.358	-434.533	-0.0001	4.4642	-0.7294	-24.5171
3740	0	Extremo 2A	10.358	-478.125	-0.0001	4.4642	-0.7295	-480.845
3740	0.5	Extremo 2A	10.358	-456.328	-0.0001	4.4642	-0.7295	-247.232
3740	1	Extremo 2A	10.358	-434.53	-0.0001	4.4642	-0.7294	-24.5169
3741	0	Extremo 1A	10.358	-384.977	-8.1E-05	10.1289	-0.7295	-36.8601
3741	0.5	Extremo 1A	10.358	-363.18	-8.1E-05	10.1289	-0.7295	150.179
3741	1	Extremo 1A	10.358	-341.382	-8.1E-05	10.1289	-0.7294	326.32
3741	0	Extremo 2A	10.358	-384.975	-8.1E-05	10.1289	-0.7295	-36.8599
3741	0.5	Extremo 2A	10.358	-363.178	-8.1E-05	10.1289	-0.7295	150.178
3741	1	Extremo 2A	10.358	-341.38	-8.1E-05	10.1289	-0.7294	326.318
3742	0	Extremo 1A	10.358	-296.929	-6.4E-05	11.8166	-0.7295	327.906
3742	0.5	Extremo 1A	10.358	-275.132	-6.4E-05	11.8166	-0.7294	470.921
3742	1	Extremo 1A	10.358	-253.334	-6.4E-05	11.8166	-0.7294	603.037
3742	0	Extremo 2A	10.358	-296.927	-6.4E-05	11.8165	-0.7295	327.904
3742	0.5	Extremo 2A	10.358	-275.129	-6.4E-05	11.8165	-0.7294	470.918
3742	1	Extremo 2A	10.358	-253.332	-6.4E-05	11.8165	-0.7294	603.033
3743	0	Extremo 1A	10.358	-206.019	-5E-05	9.786	-0.7295	606.524
3743	0.5	Extremo 1A	10.358	-184.222	-5E-05	9.786	-0.7294	704.084
3743	1	Extremo 1A	10.358	-162.424	-5E-05	9.786	-0.7294	790.745
3743	0	Extremo 2A	10.358	-206.017	-5E-05	9.786	-0.7295	606.52
3743	0.5	Extremo 2A	10.358	-184.22	-5E-05	9.786	-0.7294	704.079
3743	1	Extremo 2A	10.358	-162.422	-5E-05	9.786	-0.7294	790.739
3744	0	Extremo 1A	10.358	-113.237	-3.9E-05	5.4153	-0.7295	793.191
3744	0.5	Extremo 1A	10.358	-91.44	-3.9E-05	5.4153	-0.7294	844.36
3744	1	Extremo 1A	10.358	-69.642	-3.9E-05	5.4153	-0.7294	884.63
3744	0	Extremo 2A	10.358	-113.235	-3.9E-05	5.4152	-0.7295	793.184
3744	0.5	Extremo 2A	10.358	-91.437	-3.9E-05	5.4152	-0.7294	844.352
3744	1	Extremo 2A	10.358	-69.64	-3.9E-05	5.4152	-0.7294	884.622
3745	0	Extremo 1A	10.358	-19.703	-3.1E-05	-0.0078	-0.7295	885.461
3745	0.5	Extremo 1A	10.358	2.095	-3.1E-05	-0.0078	-0.7294	889.864
3745	1	Extremo 1A	10.358	23.892	-3.1E-05	-0.0078	-0.7294	883.367
3745	0	Extremo 2A	10.358	-19.701	-3.1E-05	-0.0078	-0.7295	885.453
3745	0.5	Extremo 2A	10.358	2.097	-3.1E-05	-0.0078	-0.7294	889.854
3745	1	Extremo 2A	10.358	23.894	-3.1E-05	-0.0078	-0.7294	883.356
3746	0	Extremo 1A	10.358	73.829	-2.4E-05	-5.4261	-0.7295	882.512
3746	0.5	Extremo 1A	10.358	95.626	-2.4E-05	-5.4261	-0.7294	840.148
3746	1	Extremo 1A	10.358	117.424	-2.4E-05	-5.4261	-0.7294	786.885
3746	0	Extremo 2A	10.358	73.831	-2.4E-05	-5.4261	-0.7295	882.501
3746	0.5	Extremo 2A	10.358	95.629	-2.4E-05	-5.4261	-0.7294	840.136
3746	1	Extremo 2A	10.358	117.426	-2.4E-05	-5.4261	-0.7294	786.873
3747	0	Extremo 1A	10.358	166.603	-1.9E-05	-9.7809	-0.7295	784.418
3747	0.5	Extremo 1A	10.358	188.401	-1.9E-05	-9.7809	-0.7294	695.667
3747	1	Extremo 1A	10.358	210.198	-1.9E-05	-9.7809	-0.7294	596.017
3747	0	Extremo 2A	10.358	166.605	-1.9E-05	-9.7808	-0.7295	784.405
3747	0.5	Extremo 2A	10.358	188.403	-1.9E-05	-9.7808	-0.7294	695.653
3747	1	Extremo 2A	10.358	210.2	-1.9E-05	-9.7808	-0.7294	596.002
3748	0	Extremo 1A	10.358	257.495	-1.5E-05	-11.7799	-0.7295	592.515
3748	0.5	Extremo 1A	10.358	279.292	-1.5E-05	-11.7799	-0.7294	458.318
3748	1	Extremo 1A	10.358	301.09	-1.5E-05	-11.7799	-0.7294	313.223
3748	0	Extremo 2A	10.358	257.497	-1.5E-05	-11.7799	-0.7295	592.5
3748	0.5	Extremo 2A	10.358	279.294	-1.5E-05	-11.7799	-0.7294	458.302
3748	1	Extremo 2A	10.358	301.092	-1.5E-05	-11.7799	-0.7294	313.206
3749	0	Extremo 1A	10.358	345.512	-1.2E-05	-10.0418	-0.7295	311.656
3749	0.5	Extremo 1A	10.358	367.31	-1.2E-05	-10.0418	-0.7294	133.45
3749	1	Extremo 1A	10.358	389.107	-1.2E-05	-10.0418	-0.7294	-55.6541
3749	0	Extremo 2A	10.358	345.514	-1.2E-05	-10.0417	-0.7295	311.639
3749	0.5	Extremo 2A	10.358	367.312	-1.2E-05	-10.0417	-0.7294	133.432
3749	1	Extremo 2A	10.358	389.109	-1.2E-05	-10.0417	-0.7294	-55.673
3750	0	Extremo 1A	10.358	438.705	-9.2E-06	-4.3172	-0.7295	-43.1437
3750	0.5	Extremo 1A	10.358	460.503	-9.2E-06	-4.3172	-0.7294	-267.946
3750	1	Extremo 1A	10.358	482.3	-9.2E-06	-4.3172	-0.7294	-503.646
3750	0	Extremo 2A	10.358	438.707	-9.2E-06	-4.3171	-0.7295	-43.1625
3750	0.5	Extremo 2A	10.358	460.505	-9.2E-06	-4.3171	-0.7294	-267.966
3750	1	Extremo 2A	10.358	482.302	-9.2E-06	-4.3171	-0.7294	-503.667
3751	0	Extremo 1A	10.358	612.495	-7.2E-06	1.9953	-0.7294	-438.818
3751	0.5	Extremo 1A	10.358	634.293	-7.2E-06	1.9953	-0.7294	-750.515
3751	1	Extremo 1A	10.358	656.09	-7.2E-06	1.9953	-0.7294	-1073.11
3751	0	Extremo 2A	10.358	612.498	-7.2E-06	1.9955	-0.7294	-438.839
3751	0.5	Extremo 2A	10.358	634.296	-7.2E-06	1.9955	-0.7294	-750.537
3751	1	Extremo 2A	10.358	656.093	-7.2E-06	1.9955	-0.7294	-1073.13
3752	0	Extremo 1A	10.358	1257.61	-5.6E-06	2.1389	-0.7294	-895.797
3752	0.5	Extremo 1A	10.358	1279.41	-5.6E-06	2.1389	-0.7294	-1530.05
3752	1	Extremo 1A	10.358	1301.21	-5.6E-06	2.1389	-0.7294	-2175.21
3752	0	Extremo 2A	10.358	1257.62	-5.6E-06	2.139	-0.7294	-895.819
3752	0.5	Extremo 2A	10.358	1279.42	-5.6E-06	2.139	-0.7294	-1530.08
3752	1	Extremo 2A	10.358	1301.21	-5.6E-06	2.139	-0.7294	-2175.23
3753	0	Extremo 1A	10.358	-1299.65	-4.4E-06	-2.1565	-0.7294	-2175.21
3753	0.5	Extremo 1A	10.358	-1277.85	-4.4E-06	-2.1565	-0.7294	-1530.83
3753	1	Extremo 1A	10.358	-1256.05	-4.4E-06	-2.1565	-0.7294	-897.359
3753	0	Extremo 2A	10.358	-1299.66	-4.4E-06	-2.1566	-0.7294	-2175.24
3753	0.5	Extremo 2A	10.358	-1277.86	-4.4E-06	-2.1566	-0.7294	-1530.86
3753	1	Extremo 2A	10.358	-1256.07	-4.4E-06	-2.1566	-0.7294	-897.375
3754	0	Extremo 1A	10.358	-654.532	-3.5E-06	-2.0128	-0.7294	-1074.68
3754	0.5	Extremo 1A	10.358	-632.734	-3.5E-06	-2.0128	-0.7294	-752.864
3754	1	Extremo 1A	10.358	-610.937	-3.5E-06	-2.0128	-0.7294	-441.946
3754	0	Extremo 2A	10.358	-654.54	-3.5E-06	-2.0129	-0.7294	-1074.7
3754	0.5	Extremo 2A	10.358	-632.743	-3.5E-06	-2.0129	-0.7294	-752.877
3754	1	Extremo 2A	10.358	-610.945	-3.5E-06	-2.0129	-0.7294	-441.955
3755	0	Extremo 1A	10.358	-480.742	-2.7E-06	4.3	-0.7294	-506.781
3755	0.5	Extremo 1A	10.358	-458.944	-2.7E-06	4.3	-0.7294	-271.86
3755	1	Extremo 1A	10.358	-437.147	-2.7E-06	4.3	-0.7294	-47.8371
3755	0	Extremo 2A	10.358	-480.75	-2.7E-06	4.3	-0.7294	-506.79
3755	0.5	Extremo 2A	10.358	-458.952	-2.7E-06	4.3	-0.7294	-271.865
3755	1	Extremo 2A	10.358	-437.155	-2.7E-06	4.3	-0.7294	-47.8379
3756	0	Extremo 1A	10.358	-387.549	-2.1E-06	10.0252	-0.7294	-60.3547
3756	0.5	Extremo 1A	10.358	-365.751	-2.1E-06	10.0252	-0.7294	127.97
3756	1	Extremo 1A	10.358	-343.954	-2.1E-06	10.0252	-0.7294	305.397
3756	0	Extremo 2A	10.358	-387.557	-2.1E-06	10.0252	-0.7294	-60.3555
3756	0.5	Extremo 2A	10.358	-365.759	-2.1E-06	10.0252	-0.7294	127.974
3756	1	Extremo 2A	10.358	-343.962	-2.1E-06	10.0252	-0.7294	305.404
3757	0	Extremo 1A	10.358	-299.532	-1.7E-06	11.7644	-0.7294	306.956
3757	0.5	Extremo 1A	10.358	-277.734	-1.7E-06	11.7644	-0.7294	451.273
3757	1	Extremo 1A	10.358	-255.937	-1.7E-06	11.7644	-0.7294	584.69
3757	0	Extremo 2A	10.358	-299.54	-1.7E-06	11.7644	-0.7294	306.964

3757	0.5	Extremo 2A	10.358	-277.742	-1.7E-06	11.7644	-0.7294	451.284
3757	1	Extremo 2A	10.358	-255.945	-1.7E-06	11.7644	-0.7294	584.706
3758	0	Extremo 1A	10.358	-208.641	-1.3E-06	9.7671	-0.7294	588.185
3758	0.5	Extremo 1A	10.358	-186.843	-1.3E-06	9.7671	-0.7294	687.056
3758	1	Extremo 1A	10.358	-165.046	-1.3E-06	9.7671	-0.7294	775.029
3758	0	Extremo 2A	10.358	-208.649	-1.3E-06	9.7671	-0.7294	588.201
3758	0.5	Extremo 2A	10.358	-186.851	-1.3E-06	9.7671	-0.7294	687.076
3758	1	Extremo 2A	10.358	-165.054	-1.3E-06	9.7671	-0.7294	775.052
3759	0	Extremo 1A	10.358	-115.868	-1E-06	5.4152	-0.7294	777.488
3759	0.5	Extremo 1A	10.358	-94.07	-1E-06	5.4152	-0.7294	829.973
3759	1	Extremo 1A	10.358	-72.273	-1E-06	5.4152	-0.7294	871.559
3759	0	Extremo 2A	10.358	-115.876	-1E-06	5.4152	-0.7294	777.512
3759	0.5	Extremo 2A	10.358	-94.079	-1E-06	5.4152	-0.7294	830.001
3759	1	Extremo 2A	10.358	-72.281	-1E-06	5.4152	-0.7294	871.591
3760	0	Extremo 1A	10.358	-22.338	-8.1E-07	0.0018	-0.7294	872.405
3760	0.5	Extremo 1A	10.358	-0.54	-8.1E-07	0.0018	-0.7294	878.125
3760	1	Extremo 1A	10.358	21.257	-8.1E-07	0.0018	-0.7294	872.946
3760	0	Extremo 2A	10.358	-22.346	-8.1E-07	0.0018	-0.7294	872.437
3760	0.5	Extremo 2A	10.358	-0.549	-8.1E-07	0.0018	-0.7294	878.161
3760	1	Extremo 2A	10.358	21.249	-8.1E-07	0.0018	-0.7294	872.986
3761	0	Extremo 1A	10.358	71.192	-6.4E-07	-5.4129	-0.7294	872.105
3761	0.5	Extremo 1A	10.358	92.99	-6.4E-07	-5.4129	-0.7294	831.06
3761	1	Extremo 1A	10.358	114.787	-6.4E-07	-5.4129	-0.7294	779.115
3761	0	Extremo 2A	10.358	71.184	-6.4E-07	-5.4129	-0.7294	872.145
3761	0.5	Extremo 2A	10.358	92.982	-6.4E-07	-5.4129	-0.7294	831.104
3761	1	Extremo 2A	10.358	114.779	-6.4E-07	-5.4129	-0.7294	779.163
3762	0	Extremo 1A	10.358	163.967	-5E-07	-9.7688	-0.7294	776.661
3762	0.5	Extremo 1A	10.358	185.765	-5E-07	-9.7688	-0.7294	689.228
3762	1	Extremo 1A	10.358	207.562	-5E-07	-9.7688	-0.7294	590.896
3762	0	Extremo 2A	10.358	163.959	-5E-07	-9.7688	-0.7294	776.709
3762	0.5	Extremo 2A	10.358	185.757	-5E-07	-9.7688	-0.7294	689.28
3762	1	Extremo 2A	10.358	207.554	-5E-07	-9.7688	-0.7294	590.952
3763	0	Extremo 1A	10.358	254.863	-3.9E-07	-11.7741	-0.7294	587.406
3763	0.5	Extremo 1A	10.358	276.66	-3.9E-07	-11.7741	-0.7294	454.525
3763	1	Extremo 1A	10.358	298.458	-3.9E-07	-11.7741	-0.7294	310.745
3763	0	Extremo 2A	10.358	254.855	-3.9E-07	-11.7743	-0.7294	587.462
3763	0.5	Extremo 2A	10.358	276.652	-3.9E-07	-11.7743	-0.7294	454.585
3763	1	Extremo 2A	10.358	298.45	-3.9E-07	-11.7743	-0.7294	310.809
3764	0	Extremo 1A	10.358	342.888	-3.1E-07	-10.0477	-0.7294	309.181
3764	0.5	Extremo 1A	10.358	364.685	-3.1E-07	-10.0477	-0.7294	132.287
3764	1	Extremo 1A	10.358	386.483	-3.1E-07	-10.0477	-0.7294	-55.5047
3764	0	Extremo 2A	10.358	342.88	-3.1E-07	-10.048	-0.7294	309.245
3764	0.5	Extremo 2A	10.358	364.677	-3.1E-07	-10.048	-0.7294	132.355
3764	1	Extremo 2A	10.358	386.475	-3.1E-07	-10.048	-0.7294	-55.4327
3765	0	Extremo 1A	10.358	436.069	-2.4E-07	-4.3374	-0.7294	-43.0306
3765	0.5	Extremo 1A	10.358	457.866	-2.4E-07	-4.3374	-0.7294	-266.514
3765	1	Extremo 1A	10.358	479.664	-2.4E-07	-4.3374	-0.7294	-500.897
3765	0	Extremo 2A	10.358	436.061	-2.4E-07	-4.3379	-0.7294	-42.9591
3765	0.5	Extremo 2A	10.358	457.858	-2.4E-07	-4.3379	-0.7294	-266.439
3765	1	Extremo 2A	10.358	479.656	-2.4E-07	-4.3379	-0.7294	-500.818
3766	0	Extremo 1A	10.358	609.643	-1.9E-07	1.9695	-0.7294	-436.235
3766	0.5	Extremo 1A	10.358	631.44	-1.9E-07	1.9695	-0.7294	-746.506
3766	1	Extremo 1A	10.358	653.238	-1.9E-07	1.9695	-0.7294	-1067.68
3766	0	Extremo 2A	10.358	609.632	-1.9E-07	1.969	-0.7294	-436.158
3766	0.5	Extremo 2A	10.358	631.43	-1.9E-07	1.969	-0.7294	-746.423
3766	1	Extremo 2A	10.358	653.227	-1.9E-07	1.969	-0.7294	-1067.59
3767	0	Extremo 1A	10.358	1253.39	-1.5E-07	2.1327	-0.7294	-890.798
3767	0.5	Extremo 1A	10.358	1275.18	-1.5E-07	2.1327	-0.7294	-1522.94
3767	1	Extremo 1A	10.358	1296.98	-1.5E-07	2.1327	-0.7294	-2165.98
3767	0	Extremo 2A	10.358	1253.36	-1.5E-07	2.1324	-0.7294	-890.715
3767	0.5	Extremo 2A	10.358	1275.16	-1.5E-07	2.1324	-0.7294	-1522.84
3767	1	Extremo 2A	10.358	1296.95	-1.5E-07	2.1324	-0.7294	-2165.87
3768	0	Extremo 1A	10.358	-1297.42	-1.2E-07	-2.128	-0.7294	-2165.98
3768	0.5	Extremo 1A	10.358	-1275.63	-1.2E-07	-2.128	-0.7294	-1522.72
3768	1	Extremo 1A	10.358	-1253.83	-1.2E-07	-2.128	-0.7294	-890.355
3768	0	Extremo 2A	10.358	-1297.37	-1.2E-07	-2.1279	-0.7294	-2165.87
3768	0.5	Extremo 2A	10.358	-1275.58	-1.2E-07	-2.1279	-0.7294	-1522.63
3768	1	Extremo 2A	10.358	-1253.78	-1.2E-07	-2.1279	-0.7294	-890.295
3769	0	Extremo 1A	10.358	-653.68	-9.1E-08	-1.9649	-0.7294	-1067.23
3769	0.5	Extremo 1A	10.358	-631.882	-9.1E-08	-1.9649	-0.7294	-745.84
3769	1	Extremo 1A	10.358	-610.085	-9.1E-08	-1.9649	-0.7294	-435.348
3769	0	Extremo 2A	10.358	-653.646	-9E-08	-1.9646	-0.7294	-1067.16
3769	0.5	Extremo 2A	10.358	-631.849	-9E-08	-1.9646	-0.7294	-745.791
3769	1	Extremo 2A	10.358	-610.051	-9E-08	-1.9646	-0.7294	-435.316
3770	0	Extremo 1A	10.358	-480.106	-7.1E-08	4.342	-0.7294	-500.008
3770	0.5	Extremo 1A	10.358	-458.309	-7.1E-08	4.342	-0.7294	-265.404
3770	1	Extremo 1A	10.358	-436.511	-7.1E-08	4.342	-0.7294	-41.6994
3770	0	Extremo 2A	10.358	-480.075	-7E-08	4.3422	-0.7294	-499.974
3770	0.5	Extremo 2A	10.358	-458.278	-7E-08	4.3422	-0.7294	-265.386
3770	1	Extremo 2A	10.358	-436.48	-7E-08	4.3422	-0.7294	-41.6965
3771	0	Extremo 1A	10.358	-386.925	-5.6E-08	10.052	-0.7294	-54.1714
3771	0.5	Extremo 1A	10.358	-365.127	-5.6E-08	10.052	-0.7294	133.842
3771	1	Extremo 1A	10.358	-343.33	-5.6E-08	10.052	-0.7294	310.956
3771	0	Extremo 2A	10.358	-386.894	-5.5E-08	10.0521	-0.7294	-54.1681
3771	0.5	Extremo 2A	10.358	-365.096	-5.5E-08	10.0521	-0.7294	133.83
3771	1	Extremo 2A	10.358	-343.299	-5.5E-08	10.0521	-0.7294	310.928
3772	0	Extremo 1A	10.358	-298.9	-4.4E-08	11.7782	-0.7294	312.523
3772	0.5	Extremo 1A	10.358	-277.102	-4.4E-08	11.7782	-0.7294	456.523
3772	1	Extremo 1A	10.358	-255.305	-4.4E-08	11.7782	-0.7294	589.625
3772	0	Extremo 2A	10.358	-298.869	-4.2E-08	11.7781	-0.7294	312.495
3772	0.5	Extremo 2A	10.358	-277.071	-4.2E-08	11.7781	-0.7294	456.48
3772	1	Extremo 2A	10.358	-255.274	-4.2E-08	11.7781	-0.7294	589.567
3773	0	Extremo 1A	10.358	-208.004	-3.4E-08	9.7724	-0.7294	593.118
3773	0.5	Extremo 1A	10.358	-186.207	-3.4E-08	9.7724	-0.7294	691.67
3773	1	Extremo 1A	10.358	-164.409	-3.4E-08	9.7724	-0.7294	779.324
3773	0	Extremo 2A	10.358	-207.973	-3.2E-08	9.7723	-0.7294	593.059
3773	0.5	Extremo 2A	10.358	-186.176	-3.2E-08	9.7723	-0.7294	691.597
3773	1	Extremo 2A	10.358	-164.378	-3.2E-08	9.7723	-0.7294	779.235
3774	0	Extremo 1A	10.358	-115.229	-2.6E-08	5.4157	-0.7294	781.781
3774	0.5	Extremo 1A	10.358	-93.431	-2.6E-08	5.4157	-0.7294	833.946
3774	1	Extremo 1A	10.358	-71.634	-2.6E-08	5.4157	-0.7294	875.212
3774	0	Extremo 2A	10.358	-115.198	-2.4E-08	5.4155	-0.7294	781.691
3774	0.5	Extremo 2A	10.358	-93.401	-2.4E-08	5.4155	-0.7294	833.841
3774	1	Extremo 2A	10.358	-71.603	-2.4E-08	5.4155	-0.7294	875.092
3775	0	Extremo 1A	10.358	-21.698	-2E-08	-0.00032	-0.7294	876.055
3775	0.5	Extremo 1A	10.358	0.1	-2E-08	-0.00032	-0.7294	881.454
3775	1	Extremo 1A	10.358	21.897	-2E-08	-0.00032	-0.7294	875.955
3775	0	Extremo 2A	10.358	-21.667	-1.8E-08	-0.00042	-0.7294	875.935
3775	0.5	Extremo 2A	10.358	0.13	-1.8E-08	-0.00042	-0.7294	881.319
3775	1	Extremo 2A	10.358	21.928	-1.8E-08	-0.00042	-0.7294	875.804
3776	0	Extremo 1A	10.358	71.833	-1.6E-08	-5.4161	-0.7294	875.111
3776	0.5	Extremo 1A	10.358	93.631	-1.6E-08	-5.4161	-0.7294	833.745
3776	1	Extremo 1A	10.358	115.428	-1.6E-08	-5.4161	-0.7294	781.481
3776	0	Extremo 2A	10.358	71.864	-1.2E-08	-5.4161	-0.7294	874.96
3776	0.5	Extremo 2A	10.358	93.661	-1.2E-08	-5.4161	-0.7294	833.579
3776	1	Extremo 2A	10.358	115.459	-1.2E-08	-5.4161	-0.7294	781.299
3777	0	Extremo 1A	10.358	164.608	-1.2E-08	-9.7721	-0.7294	779.023
3777	0.5	Extremo 1A	10.358	186.405	-1.2E-08	-9.7721	-0.7294	691.27
3777	1	Extremo 1A	10.358	208.203	-1.2E-08	-9.7721	-0.7294	592.618
3777	0	Extremo 2A	10.358	164.639	-7.7E-09	-9.7718	-0.7294	778.841
3777	0.5	Extremo 2A	10.358	186.436	-7.7E-09	-9.7718	-0.7294	691.072
3777	1	Extremo 2A	10.358	208.234	-7.7E-09	-9.7718	-0.7294	592.405
3778	0	Extremo 1A	10.358	255.503	-8.9E-09	-11.7764	-0.7294	589.124
3778	0.5	Extremo 1A	10.358	277.3	-8.9E-09	-11.7764	-0.7294	455.924
3778	1	Extremo 1A	10.358	299.098	-8.9E-09	-11.7764	-0.7294	311.824
3778	0	Extremo 2A	10.358	255.533	-3.6E-09	-11.7758	-0.7294	588.911
3778	0.5	Extremo 2A	10.358	277.331	-3.6E-09	-11.7758	-0.7294	455.695
3778	1	Extremo 2A	10.358	299.128	-3.6E-09	-11.7758	-0.7294	311.581
3779	0	Extremo 1A	10.358	343.526	-6.5E-09	-10.0479	-0.7294	310.258
3779	0.5	Extremo 1A	10.358	365.324	-6.5E-09	-10.0479	-0.7294	133.046
3779	1	Extremo 1A	10.358	387.121	-6.5E-09	-10.0479	-0.7294	-55.0655
3779	0	Extremo 2A	10.358	343.556	3.2E-10	-10.0467	-0.7294	310.015
3779	0.5	Extremo 2A	10.358	365.354	3.2E-10	-10.0467	-0.7294	132.788
3779	1	Extremo 2A	10.358	387.151	3.2E-10	-10.0467	-0.7294	-55.3388
3780	0	Extremo 1A	10.358	436.71	-4.4E-09	-4.3351	-0.7294	-42.5854
3780	0.5	Extremo 1A	10.358	458.507	-4.4E-09	-4.3351	-0.7294	-266.39
3780	1	Extremo 1A	10.358	480.305	-4.4E-09	-4.3351	-0.7294	-501.093
3780	0	Extremo 2A	10.358	436.74	4.2E-09	-4.3332	-0.7294	-42.8566
3780	0.5	Extremo 2A	10.358	458.538	4.2E-09	-4.3332	-0.7294	-266.676
3780	1	Extremo 2A	10.358	480.335	4.2E-09	-4.3332	-0.7294	-501.395
3781	0	Extremo 1A	10.358	610.323	-2.8E-09	1.9728	-0.7294	-436.401
3781	0.5	Extremo 1A	10.358	632.121	-2.8E-09	1.9728	-0.7294	-747.012
3781	1	Extremo 1A	10.358	653.918	-2.8E-09	1.9728	-0.7294	-1068.52
3781	0	Extremo 2A	10.358	610.364	8.2E-09	1.975	-0.7294	-436.695

3781	0.5	Extremo 2A	10.358	632.161	8.2E-09	1.975	-0.7294	-747.326
3781	1	Extremo 2A	10.358	653.959	8.2E-09	1.975	-0.7294	-1068.86
3782	0	Extremo 1A	10.358	1254.32	-1.3E-09	2.1323	-0.7294	-891.564
3782	0.5	Extremo 1A	10.358	1276.12	-1.3E-09	2.1323	-0.7294	-1524.17
3782	1	Extremo 1A	10.358	1297.91	-1.3E-09	2.1323	-0.7294	-2167.68
3782	0	Extremo 2A	10.358	1254.42	1.3E-08	2.1336	-0.7294	-891.879
3782	0.5	Extremo 2A	10.358	1276.22	1.3E-08	2.1336	-0.7294	-1524.54
3782	1	Extremo 2A	10.358	1298.02	1.3E-08	2.1336	-0.7294	-2168.1
3783	0	Extremo 1A	10.358	-1297.68	8.6E-11	-2.1348	-0.7294	-2167.68
3783	0.5	Extremo 1A	10.358	-1275.88	8.6E-11	-2.1348	-0.7294	-1524.29
3783	1	Extremo 1A	10.358	-1254.08	8.6E-11	-2.1348	-0.7294	-891.801
3783	0	Extremo 2A	10.358	-1297.87	1.8E-08	-2.1351	-0.7294	-2168.1
3783	0.5	Extremo 2A	10.358	-1276.07	1.8E-08	-2.1351	-0.7294	-1524.61
3783	1	Extremo 2A	10.358	-1254.27	1.8E-08	-2.1351	-0.7294	-892.029
3784	0	Extremo 1A	10.358	-653.682	1.4E-09	-1.9753	-0.7294	-1068.76
3784	0.5	Extremo 1A	10.358	-631.885	1.4E-09	-1.9753	-0.7294	-747.368
3784	1	Extremo 1A	10.358	-610.087	1.4E-09	-1.9753	-0.7294	-436.875
3784	0	Extremo 2A	10.358	-653.809	2.4E-08	-1.9765	-0.7294	-1069.01
3784	0.5	Extremo 2A	10.358	-632.011	2.4E-08	-1.9765	-0.7294	-747.552
3784	1	Extremo 2A	10.358	-610.214	2.4E-08	-1.9765	-0.7294	-436.995
3785	0	Extremo 1A	10.358	-480.068	2.8E-09	4.3327	-0.7294	-501.568
3785	0.5	Extremo 1A	10.358	-458.271	2.8E-09	4.3327	-0.7294	-266.983
3785	1	Extremo 1A	10.358	-436.473	2.8E-09	4.3327	-0.7294	-43.2968
3785	0	Extremo 2A	10.358	-480.186	3.2E-08	4.3317	-0.7294	-501.696
3785	0.5	Extremo 2A	10.358	-458.388	3.2E-08	4.3317	-0.7294	-267.052
3785	1	Extremo 2A	10.358	-436.591	3.2E-08	4.3317	-0.7294	-43.3078
3786	0	Extremo 1A	10.358	-386.885	4.2E-09	10.0456	-0.7294	-55.778
3786	0.5	Extremo 1A	10.358	-365.088	4.2E-09	10.0456	-0.7294	132.215
3786	1	Extremo 1A	10.358	-343.29	4.2E-09	10.0456	-0.7294	309.31
3786	0	Extremo 2A	10.358	-387.002	4.1E-08	10.0453	-0.7294	-55.7906
3786	0.5	Extremo 2A	10.358	-365.204	4.1E-08	10.0453	-0.7294	132.261
3786	1	Extremo 2A	10.358	-343.407	4.1E-08	10.0453	-0.7294	309.414
3787	0	Extremo 1A	10.358	-298.861	5.9E-09	11.7742	-0.7294	310.874
3787	0.5	Extremo 1A	10.358	-277.064	5.9E-09	11.7742	-0.7294	454.856
3787	1	Extremo 1A	10.358	-255.266	5.9E-09	11.7742	-0.7294	587.938
3787	0	Extremo 2A	10.358	-298.978	5.3E-08	11.7744	-0.7294	310.978
3787	0.5	Extremo 2A	10.358	-277.181	5.3E-08	11.7744	-0.7294	455.018
3787	1	Extremo 2A	10.358	-255.383	5.3E-08	11.7744	-0.7294	588.159
3788	0	Extremo 1A	10.358	-207.967	7.8E-09	9.7701	-0.7294	591.431
3788	0.5	Extremo 1A	10.358	-186.169	7.8E-09	9.7701	-0.7294	689.965
3788	1	Extremo 1A	10.358	-164.372	7.8E-09	9.7701	-0.7294	777.6
3788	0	Extremo 2A	10.358	-208.084	6.8E-08	9.7707	-0.7294	591.652
3788	0.5	Extremo 2A	10.358	-186.286	6.8E-08	9.7707	-0.7294	690.245
3788	1	Extremo 2A	10.358	-164.489	6.8E-08	9.7707	-0.7294	777.939
3789	0	Extremo 1A	10.358	-115.192	1E-08	5.4146	-0.7294	780.056
3789	0.5	Extremo 1A	10.358	-93.395	1E-08	5.4146	-0.7294	832.203
3789	1	Extremo 1A	10.358	-71.597	1E-08	5.4146	-0.7294	873.451
3789	0	Extremo 2A	10.358	-115.309	8.6E-08	5.4152	-0.7294	780.396
3789	0.5	Extremo 2A	10.358	-93.512	8.6E-08	5.4152	-0.7294	832.601
3789	1	Extremo 2A	10.358	-71.714	8.6E-08	5.4152	-0.7294	873.907
3790	0	Extremo 1A	10.358	-21.662	1.3E-08	-0.00044	-0.7294	874.294
3790	0.5	Extremo 1A	10.358	0.136	1.3E-08	-0.00044	-0.7294	879.675
3790	1	Extremo 1A	10.358	21.933	1.3E-08	-0.00044	-0.7294	874.158
3790	0	Extremo 2A	10.358	-21.779	1.1E-07	-2.8E-05	-0.7294	874.751
3790	0.5	Extremo 2A	10.358	0.019	1.1E-07	-2.8E-05	-0.7294	880.19
3790	1	Extremo 2A	10.358	21.816	1.1E-07	-2.8E-05	-0.7294	874.732
3791	0	Extremo 1A	10.358	71.869	1.7E-08	-5.4152	-0.7294	873.314
3791	0.5	Extremo 1A	10.358	93.666	1.7E-08	-5.4152	-0.7294	831.93
3791	1	Extremo 1A	10.358	115.464	1.7E-08	-5.4152	-0.7294	779.647
3791	0	Extremo 2A	10.358	71.752	1.4E-07	-5.4152	-0.7294	873.888
3791	0.5	Extremo 2A	10.358	93.55	1.4E-07	-5.4152	-0.7294	832.563
3791	1	Extremo 2A	10.358	115.347	1.4E-07	-5.4152	-0.7294	780.338
3792	0	Extremo 1A	10.358	164.643	2.1E-08	-9.7697	-0.7294	777.189
3792	0.5	Extremo 1A	10.358	186.441	2.1E-08	-9.7697	-0.7294	689.418
3792	1	Extremo 1A	10.358	208.238	2.1E-08	-9.7697	-0.7294	590.749
3792	0	Extremo 2A	10.358	164.527	1.8E-07	-9.7705	-0.7294	777.881
3792	0.5	Extremo 2A	10.358	186.324	1.8E-07	-9.7705	-0.7294	690.169
3792	1	Extremo 2A	10.358	208.122	1.8E-07	-9.7705	-0.7294	591.557
3793	0	Extremo 1A	10.358	255.537	2.7E-08	-11.7718	-0.7294	587.255
3793	0.5	Extremo 1A	10.358	277.334	2.7E-08	-11.7718	-0.7294	454.037
3793	1	Extremo 1A	10.358	299.132	2.7E-08	-11.7718	-0.7294	309.921
3793	0	Extremo 2A	10.358	255.421	2.3E-07	-11.7741	-0.7294	588.064
3793	0.5	Extremo 2A	10.358	277.219	2.3E-07	-11.7741	-0.7294	454.904
3793	1	Extremo 2A	10.358	299.016	2.3E-07	-11.7741	-0.7294	310.846
3794	0	Extremo 1A	10.358	343.558	3.4E-08	-10.0399	-0.7294	308.358
3794	0.5	Extremo 1A	10.358	365.356	3.4E-08	-10.0399	-0.7294	131.129
3794	1	Extremo 1A	10.358	387.153	3.4E-08	-10.0399	-0.7294	-56.9982
3794	0	Extremo 2A	10.358	343.444	2.9E-07	-10.0445	-0.7294	309.281
3794	0.5	Extremo 2A	10.358	365.242	2.9E-07	-10.0445	-0.7294	132.11
3794	1	Extremo 2A	10.358	387.039	2.9E-07	-10.0445	-0.7294	-55.9606
3795	0	Extremo 1A	10.358	436.745	4.4E-08	-4.3233	-0.7294	-44.5061
3795	0.5	Extremo 1A	10.358	458.542	4.4E-08	-4.3233	-0.7294	-268.328
3795	1	Extremo 1A	10.358	480.34	4.4E-08	-4.3233	-0.7294	-503.048
3795	0	Extremo 2A	10.358	436.628	3.7E-07	-4.3305	-0.7294	-43.4762
3795	0.5	Extremo 2A	10.358	458.426	3.7E-07	-4.3305	-0.7294	-267.24
3795	1	Extremo 2A	10.358	480.223	3.7E-07	-4.3305	-0.7294	-501.902
3796	0	Extremo 1A	10.358	610.413	5.5E-08	1.9862	-0.7294	-438.312
3796	0.5	Extremo 1A	10.358	632.21	5.5E-08	1.9862	-0.7294	-748.967
3796	1	Extremo 1A	10.358	654.008	5.5E-08	1.9862	-0.7294	-1070.52
3796	0	Extremo 2A	10.358	610.26	4.7E-07	1.9778	-0.7294	-437.196
3796	0.5	Extremo 2A	10.358	632.057	4.7E-07	1.9778	-0.7294	-747.775
3796	1	Extremo 2A	10.358	653.855	4.7E-07	1.9778	-0.7294	-1069.25
3797	0	Extremo 1A	10.358	1254.75	7E-08	2.1408	-0.7294	-893.452
3797	0.5	Extremo 1A	10.358	1276.55	7E-08	2.1408	-0.7294	-1526.28
3797	1	Extremo 1A	10.358	1298.35	7E-08	2.1408	-0.7294	-2170
3797	0	Extremo 2A	10.358	1254.37	6E-07	2.1356	-0.7294	-892.259
3797	0.5	Extremo 2A	10.358	1276.16	6E-07	2.1356	-0.7294	-1524.89
3797	1	Extremo 2A	10.358	1297.96	6E-07	2.1356	-0.7294	-2168.42
3798	0	Extremo 1A	10.358	-1298.87	9E-08	-2.1351	-0.7294	-2170
3798	0.5	Extremo 1A	10.358	-1277.07	9E-08	-2.1351	-0.7294	-1526.02
3798	1	Extremo 1A	10.358	-1255.27	9E-08	-2.1351	-0.7294	-892.934
3798	0	Extremo 2A	10.358	-1298.15	7.6E-07	-2.1345	-0.7294	-2168.42
3798	0.5	Extremo 2A	10.358	-1276.35	7.6E-07	-2.1345	-0.7294	-1524.8
3798	1	Extremo 2A	10.358	-1254.56	7.6E-07	-2.1345	-0.7294	-892.07
3799	0	Extremo 1A	10.358	-654.525	1.1E-07	-1.9806	-0.7294	-1070
3799	0.5	Extremo 1A	10.358	-632.727	1.1E-07	-1.9806	-0.7294	-748.188
3799	1	Extremo 1A	10.358	-610.93	1.1E-07	-1.9806	-0.7294	-437.274
3799	0	Extremo 2A	10.358	-654.044	9.7E-07	-1.9767	-0.7294	-1069.06
3799	0.5	Extremo 2A	10.358	-632.246	9.7E-07	-1.9767	-0.7294	-747.49
3799	1	Extremo 2A	10.358	-610.449	9.7E-07	-1.9767	-0.7294	-436.816
3800	0	Extremo 1A	10.358	-480.857	1.4E-07	4.3287	-0.7294	-502.008
3800	0.5	Extremo 1A	10.358	-459.059	1.4E-07	4.3287	-0.7294	-267.029
3800	1	Extremo 1A	10.358	-437.262	1.4E-07	4.3287	-0.7294	-42.9487
3800	0	Extremo 2A	10.358	-480.412	1.2E-06	4.3315	-0.7294	-501.522
3800	0.5	Extremo 2A	10.358	-458.615	1.2E-06	4.3315	-0.7294	-266.765
3800	1	Extremo 2A	10.358	-436.817	1.2E-06	4.3315	-0.7294	-42.9073
3801	0	Extremo 1A	10.358	-387.67	1.8E-07	10.0452	-0.7294	-55.4385
3801	0.5	Extremo 1A	10.358	-365.873	1.8E-07	10.0452	-0.7294	132.947
3801	1	Extremo 1A	10.358	-344.075	1.8E-07	10.0452	-0.7294	310.434
3801	0	Extremo 2A	10.358	-387.228	1.6E-06	10.0455	-0.7294	-55.3909
3801	0.5	Extremo 2A	10.358	-365.431	1.6E-06	10.0455	-0.7294	132.774
3801	1	Extremo 2A	10.358	-343.633	1.6E-06	10.0455	-0.7294	310.04
3802	0	Extremo 1A	10.358	-299.649	2.3E-07	11.7767	-0.7294	312
3802	0.5	Extremo 1A	10.358	-277.851	2.3E-07	11.7767	-0.7294	456.375
3802	1	Extremo 1A	10.358	-256.054	2.3E-07	11.7767	-0.7294	589.851
3802	0	Extremo 2A	10.358	-299.205	2E-06	11.7749	-0.7294	311.605
3802	0.5	Extremo 2A	10.358	-277.407	2E-06	11.7749	-0.7294	455.758
3802	1	Extremo 2A	10.358	-255.61	2E-06	11.7749	-0.7294	589.013
3803	0	Extremo 1A	10.358	-208.755	3E-07	9.7741	-0.7294	593.347
3803	0.5	Extremo 1A	10.358	-186.957	3E-07	9.7741	-0.7294	692.275
3803	1	Extremo 1A	10.358	-165.16	3E-07	9.7741	-0.7294	780.305
3803	0	Extremo 2A	10.358	-208.311	2.6E-06	9.7712	-0.7294	592.506
3803	0.5	Extremo 2A	10.358	-186.513	2.6E-06	9.7712	-0.7294	691.212
3803	1	Extremo 2A	10.358	-164.716	2.6E-06	9.7712	-0.7294	779.02
3804	0	Extremo 1A	10.358	-115.98	3.8E-07	5.4186	-0.7294	782.765
3804	0.5	Extremo 1A	10.358	-94.183	3.8E-07	5.4186	-0.7294	835.306
3804	1	Extremo 1A	10.358	-72.385	3.8E-07	5.4186	-0.7294	876.948
3804	0	Extremo 2A	10.358	-115.536	3.3E-06	5.4156	-0.7294	781.477
3804	0.5	Extremo 2A	10.358	-93.738	3.3E-06	5.4156	-0.7294	833.796
3804	1	Extremo 2A	10.358	-71.941	3.3E-06	5.4156	-0.7294	875.216
3805	0	Extremo 1A	10.358	-22.449	4.8E-07	0.0023	-0.7294	877.795
3805	0.5	Extremo 1A	10.358	-0.652	4.8E-07	0.0023	-0.7294	883.57
3805	1	Extremo 1A	10.358	21.146	4.8E-07	0.0023	-0.7294	878.447
3805	0	Extremo 2A	10.358	-22.005	4.2E-06	-0.0001	-0.7294	876.06

3805	0.5	Extremo 2A	10.358	-0.208	4.2E-06	-0.0001	-0.7294	881.613
3805	1	Extremo 2A	10.358	21.59	4.2E-06	-0.0001	-0.7294	876.268
3806	0	Extremo 1A	10.358	71.083	6.2E-07	-5.4156	-0.7294	877.607
3806	0.5	Extremo 1A	10.358	92.88	6.2E-07	-5.4156	-0.7294	836.616
3806	1	Extremo 1A	10.358	114.678	6.2E-07	-5.4156	-0.7294	784.727
3806	0	Extremo 2A	10.358	71.526	5.3E-06	-5.4162	-0.7294	875.426
3806	0.5	Extremo 2A	10.358	93.323	5.3E-06	-5.4162	-0.7294	834.213
3806	1	Extremo 2A	10.358	115.121	5.3E-06	-5.4162	-0.7294	782.102
3807	0	Extremo 1A	10.358	163.86	7.9E-07	-9.7759	-0.7294	782.274
3807	0.5	Extremo 1A	10.358	185.657	7.9E-07	-9.7759	-0.7294	694.894
3807	1	Extremo 1A	10.358	207.455	7.9E-07	-9.7759	-0.7294	596.616
3807	0	Extremo 2A	10.358	164.301	6.8E-06	-9.7732	-0.7294	779.646
3807	0.5	Extremo 2A	10.358	186.099	6.8E-06	-9.7732	-0.7294	692.046
3807	1	Extremo 2A	10.358	207.896	6.8E-06	-9.7732	-0.7294	593.547
3808	0	Extremo 1A	10.358	254.759	1E-06	-11.7883	-0.7294	593.125
3808	0.5	Extremo 1A	10.358	276.556	1E-06	-11.7883	-0.7294	460.296
3808	1	Extremo 1A	10.358	298.354	1E-06	-11.7883	-0.7294	316.569
3808	0	Extremo 2A	10.358	255.197	8.6E-06	-11.7794	-0.7294	590.055
3808	0.5	Extremo 2A	10.358	276.994	8.6E-06	-11.7794	-0.7294	457.007
3808	1	Extremo 2A	10.358	298.792	8.6E-06	-11.7794	-0.7295	313.06
3809	0	Extremo 1A	10.358	342.79	1.3E-06	-10.0723	-0.7294	314.997
3809	0.5	Extremo 1A	10.358	364.587	1.3E-06	-10.0723	-0.7294	138.153
3809	1	Extremo 1A	10.358	386.385	1.3E-06	-10.0723	-0.7294	-49.5906
3809	0	Extremo 2A	10.358	343.222	1.1E-05	-10.0539	-0.7294	311.492
3809	0.5	Extremo 2A	10.358	365.019	1.1E-05	-10.0539	-0.7294	134.432
3809	1	Extremo 2A	10.358	386.817	1.1E-05	-10.0539	-0.7295	-53.5273
3810	0	Extremo 1A	10.358	435.963	1.6E-06	-4.3741	-0.7294	-37.1532
3810	0.5	Extremo 1A	10.358	457.76	1.6E-06	-4.3741	-0.7294	-260.584
3810	1	Extremo 1A	10.358	479.558	1.6E-06	-4.3741	-0.7294	-494.914
3810	0	Extremo 2A	10.358	436.4	1.4E-05	-4.3441	-0.7294	-41.0613
3810	0.5	Extremo 2A	10.358	458.198	1.4E-05	-4.3441	-0.7294	-264.711
3810	1	Extremo 2A	10.358	479.995	1.4E-05	-4.3441	-0.7295	-499.259
3811	0	Extremo 1A	10.358	609.371	2.1E-06	1.9277	-0.7294	-430.388
3811	0.5	Extremo 1A	10.358	631.168	2.1E-06	1.9277	-0.7294	-740.522
3811	1	Extremo 1A	10.358	652.966	2.1E-06	1.9277	-0.7294	-1061.56
3811	0	Extremo 2A	10.358	609.945	1.8E-05	1.9645	-0.7294	-434.621
3811	0.5	Extremo 2A	10.358	631.743	1.8E-05	1.9645	-0.7294	-745.043
3811	1	Extremo 2A	10.358	653.54	1.8E-05	1.9645	-0.7295	-1066.36
3812	0	Extremo 1A	10.358	1252.06	2.6E-06	2.1052	-0.7294	-885.023
3812	0.5	Extremo 1A	10.358	1273.86	2.6E-06	2.1052	-0.7294	-1516.5
3812	1	Extremo 1A	10.358	1295.65	2.6E-06	2.1052	-0.7294	-2158.88
3812	0	Extremo 2A	10.358	1253.51	2.3E-05	2.1335	-0.7294	-889.544
3812	0.5	Extremo 2A	10.358	1275.31	2.3E-05	2.1335	-0.7294	-1521.75
3812	1	Extremo 2A	10.358	1297.11	2.3E-05	2.1335	-0.7295	-2164.85
3813	0	Extremo 1A	10.358	-1293.79	3.4E-06	-2.1295	-0.7294	-2158.88
3813	0.5	Extremo 1A	10.358	-1271.99	3.4E-06	-2.1295	-0.7294	-1517.44
3813	1	Extremo 1A	10.358	-1250.2	3.4E-06	-2.1295	-0.7294	-886.891
3813	0	Extremo 2A	10.358	-1296.49	2.9E-05	-2.119	-0.7294	-2164.86
3813	0.5	Extremo 2A	10.358	-1274.69	2.9E-05	-2.119	-0.7294	-1522.06
3813	1	Extremo 2A	10.358	-1252.89	2.9E-05	-2.119	-0.7295	-890.164
3814	0	Extremo 1A	10.358	-651.102	4.3E-06	-1.9519	-0.7294	-1063.43
3814	0.5	Extremo 1A	10.358	-629.305	4.3E-06	-1.9519	-0.7294	-743.33
3814	1	Extremo 1A	10.358	-607.507	4.3E-06	-1.9519	-0.7294	-434.127
3814	0	Extremo 2A	10.358	-652.92	3.7E-05	-1.95	-0.7294	-1066.98
3814	0.5	Extremo 2A	10.358	-631.123	3.7E-05	-1.95	-0.7294	-745.973
3814	1	Extremo 2A	10.358	-609.325	3.7E-05	-1.95	-0.7295	-435.861
3815	0	Extremo 1A	10.358	-477.695	5.5E-06	4.3503	-0.7294	-498.662
3815	0.5	Extremo 1A	10.358	-455.897	5.5E-06	4.3503	-0.7294	-265.264
3815	1	Extremo 1A	10.358	-434.1	5.5E-06	4.3503	-0.7294	-42.7647
3815	0	Extremo 2A	10.358	-479.376	4.7E-05	4.3587	-0.7294	-500.5
3815	0.5	Extremo 2A	10.358	-457.578	4.7E-05	4.3587	-0.7294	-266.261
3815	1	Extremo 2A	10.358	-435.781	4.7E-05	4.3587	-0.7295	-42.9215
3816	0	Extremo 1A	10.358	-384.522	7E-06	10.0493	-0.7294	-55.211
3816	0.5	Extremo 1A	10.358	-362.725	7E-06	10.0493	-0.7294	131.601
3816	1	Extremo 1A	10.358	-340.927	7E-06	10.0493	-0.7294	307.514
3816	0	Extremo 2A	10.358	-386.197	6E-05	10.0686	-0.7294	-55.3879
3816	0.5	Extremo 2A	10.358	-364.4	6E-05	10.0686	-0.7294	132.261
3816	1	Extremo 2A	10.358	-342.602	6E-05	10.0686	-0.7295	309.012
3817	0	Extremo 1A	10.358	-296.492	8.9E-06	11.7666	-0.7294	309.077
3817	0.5	Extremo 1A	10.358	-274.694	8.9E-06	11.7666	-0.7294	451.873
3817	1	Extremo 1A	10.358	-252.897	8.9E-06	11.7666	-0.7295	583.771
3817	0	Extremo 2A	10.358	-298.172	7.7E-05	11.7943	-0.7294	310.579
3817	0.5	Extremo 2A	10.358	-276.375	7.7E-05	11.7943	-0.7295	454.216
3817	1	Extremo 2A	10.358	-254.577	7.7E-05	11.7943	-0.7295	586.954
3818	0	Extremo 1A	10.358	-205.593	1.1E-05	9.7564	-0.7294	587.252
3818	0.5	Extremo 1A	10.358	-183.796	1.1E-05	9.7564	-0.7294	684.6
3818	1	Extremo 1A	10.358	-161.998	1.1E-05	9.7564	-0.7295	771.048
3818	0	Extremo 2A	10.358	-207.276	9.8E-05	9.7882	-0.7294	590.446
3818	0.5	Extremo 2A	10.358	-185.479	9.8E-05	9.7882	-0.7295	688.635
3818	1	Extremo 2A	10.358	-163.681	9.8E-05	9.7882	-0.7295	775.925
3819	0	Extremo 1A	10.358	-112.818	1.4E-05	5.3995	-0.7294	773.492
3819	0.5	Extremo 1A	10.358	-91.02	1.4E-05	5.3995	-0.7294	824.451
3819	1	Extremo 1A	10.358	-69.223	1.4E-05	5.3995	-0.7295	864.512
3819	0	Extremo 2A	10.358	-114.501	0.00013	5.4314	-0.7294	778.381
3819	0.5	Extremo 2A	10.358	-92.703	0.00013	5.4314	-0.7295	830.182
3819	1	Extremo 2A	10.358	-70.906	0.00013	5.4314	-0.7295	871.084
3820	0	Extremo 1A	10.358	-19.289	1.8E-05	-0.0122	-0.7294	865.341
3820	0.5	Extremo 1A	10.358	2.509	1.8E-05	-0.0122	-0.7294	869.536
3820	1	Extremo 1A	10.358	24.306	1.8E-05	-0.0122	-0.7295	862.832
3820	0	Extremo 2A	10.358	-20.969	0.00016	0.0155	-0.7294	871.926
3820	0.5	Extremo 2A	10.358	0.829	0.00016	0.0155	-0.7295	876.961
3820	1	Extremo 2A	10.358	22.626	0.00016	0.0155	-0.7295	871.097
3821	0	Extremo 1A	10.358	74.238	2.3E-05	-5.4179	-0.7294	861.973
3821	0.5	Extremo 1A	10.358	96.035	2.3E-05	-5.4179	-0.7294	819.405
3821	1	Extremo 1A	10.358	117.833	2.3E-05	-5.4179	-0.7295	765.938
3821	0	Extremo 2A	10.358	72.564	0.0002	-5.4001	-0.7294	870.253
3821	0.5	Extremo 2A	10.358	94.361	0.0002	-5.4001	-0.7295	828.522
3821	1	Extremo 2A	10.358	116.159	0.0002	-5.4001	-0.7296	775.892
3822	0	Extremo 1A	10.358	167.003	3E-05	-9.7547	-0.7294	763.466
3822	0.5	Extremo 1A	10.358	188.8	3E-05	-9.7547	-0.7294	674.515
3822	1	Extremo 1A	10.358	210.598	3E-05	-9.7547	-0.7295	574.666
3822	0	Extremo 2A	10.358	165.341	0.00026	-9.7561	-0.7293	773.436
3822	0.5	Extremo 2A	10.358	187.139	0.00026	-9.7561	-0.7295	685.316
3822	1	Extremo 2A	10.358	208.936	0.00026	-9.7561	-0.7296	586.297
3823	0	Extremo 1A	10.358	257.878	3.8E-05	-11.7254	-0.7294	571.163
3823	0.5	Extremo 1A	10.358	279.675	3.8E-05	-11.7254	-0.7294	436.775
3823	1	Extremo 1A	10.358	301.473	3.8E-05	-11.7254	-0.7295	291.488
3823	0	Extremo 2A	10.358	256.24	0.00033	-11.7613	-0.7293	582.809
3823	0.5	Extremo 2A	10.358	278.038	0.00033	-11.7613	-0.7295	449.24
3823	1	Extremo 2A	10.358	299.835	0.00033	-11.7613	-0.7296	304.771
3824	0	Extremo 1A	10.358	345.869	4.9E-05	-9.9444	-0.7294	289.946
3824	0.5	Extremo 1A	10.358	367.666	4.9E-05	-9.9444	-0.7294	111.563
3824	1	Extremo 1A	10.358	389.464	4.9E-05	-9.9444	-0.7295	-77.7201
3824	0	Extremo 2A	10.358	344.273	0.00042	-10.0375	-0.7293	303.226
3824	0.5	Extremo 2A	10.358	366.07	0.00042	-10.0375	-0.7295	125.64
3824	1	Extremo 2A	10.358	387.868	0.00042	-10.0375	-0.7297	-62.8445
3825	0	Extremo 1A	10.358	439.087	6.2E-05	-4.1679	-0.7294	-65.0765
3825	0.5	Extremo 1A	10.358	460.884	6.2E-05	-4.1679	-0.7294	-290.069
3825	1	Extremo 1A	10.358	482.682	6.2E-05	-4.1679	-0.7295	-525.961
3825	0	Extremo 2A	10.358	437.505	0.00054	-4.3425	-0.7292	-50.2899
3825	0.5	Extremo 2A	10.358	459.303	0.00054	-4.3425	-0.7295	-274.492
3825	1	Extremo 2A	10.358	481.1	0.00054	-4.3425	-0.7297	-509.593
3826	0	Extremo 1A	10.358	613.48	7.9E-05	2.1752	-0.7294	-460.631
3826	0.5	Extremo 1A	10.358	635.278	7.9E-05	2.1752	-0.7295	-772.821
3826	1	Extremo 1A	10.358	657.075	7.9E-05	2.1752	-0.7295	-1095.91
3826	0	Extremo 2A	10.358	611.464	0.00069	1.9138	-0.7291	-444.652
3826	0.5	Extremo 2A	10.358	633.261	0.00069	1.9138	-0.7295	-755.833
3826	1	Extremo 2A	10.358	655.059	0.00069	1.9138	-0.7298	-1077.91
3827	0	Extremo 1A	10.358	1262.49	0.0001	2.2814	-0.7294	-917.319
3827	0.5	Extremo 1A	10.358	1284.28	0.0001	2.2814	-0.7295	-1554.01
3827	1	Extremo 1A	10.358	1306.08	0.0001	2.2814	-0.7295	-2201.6
3827	0	Extremo 2A	10.357	1257.4	0.00088	1.9659	-0.729	-900.349
3827	0.5	Extremo 2A	10.357	1279.2	0.00088	1.9659	-0.7295	-1534.5
3827	1	Extremo 2A	10.357	1301	0.00088	1.9659	-0.7299	-2179.55
3828	0	Extremo 1A	10.358	-1313.12	0.00013	-2.093	-0.7294	-2201.58
3828	0.5	Extremo 1A	10.358	-1291.32	0.00013	-2.093	-0.7295	-1550.47
3828	1	Extremo 1A	10.358	-1269.52	0.00013	-2.093	-0.7295	-910.26
3828	0	Extremo 2A	10.357	-1303.37	0.00112	-2.4383	-0.7289	-2179.57
3828	0.5	Extremo 2A	10.357	-1281.57	0.00112	-2.4383	-0.7295	-1533.33
3828	1	Extremo 2A	10.357	-1259.77	0.00112	-2.4383	-0.7301	-897.997
3829	0	Extremo 1A	10.358	-664.112	0.00016	-1.9876	-0.7294	-1088.81
3829	0.5	Extremo 1A	10.358	-642.315	0.00016	-1.9876	-0.7295	-762.2
3829	1	Extremo 1A	10.358	-620.517	0.00016	-1.9876	-0.7295	-446.492
3829	0	Extremo 2A	10.356	-657.433	0.00143	-2.3858	-0.7288	-1075.61

3829	0.5	Extremo 2A	10.356	-635.636	0.00143	-2.3858	-0.7295	-752.338
3829	1	Extremo 2A	10.356	-613.838	0.00143	-2.3858	-0.7302	-439.969
3830	0	Extremo 1A	10.358	-489.718	0.00021	4.3536	-0.7294	-511.778
3830	0.5	Extremo 1A	10.358	-467.92	0.00021	4.3536	-0.7295	-272.368
3830	1	Extremo 1A	10.358	-446.123	0.00021	4.3536	-0.7296	-43.8575
3830	0	Extremo 2A	10.356	-483.476	0.00183	3.8715	-0.7286	-504.954
3830	0.5	Extremo 2A	10.356	-461.678	0.00183	3.8715	-0.7295	-268.666
3830	1	Extremo 2A	10.356	-439.881	0.00183	3.8715	-0.7304	-43.2758
3831	0	Extremo 1A	10.358	-396.498	0.00027	10.1267	-0.7293	-56.4566
3831	0.5	Extremo 1A	10.358	-374.701	0.00027	10.1267	-0.7295	136.343
3831	1	Extremo 1A	10.358	-352.903	0.00027	10.1267	-0.7296	318.244
3831	0	Extremo 2A	10.354	-390.246	0.00233	9.5687	-0.7284	-55.8755
3831	0.5	Extremo 2A	10.354	-368.449	0.00233	9.5687	-0.7295	133.798
3831	1	Extremo 2A	10.354	-346.651	0.00233	9.5687	-0.7307	312.573
3832	0	Extremo 1A	10.358	-308.504	0.00034	11.9017	-0.7293	319.832
3832	0.5	Extremo 1A	10.358	-286.706	0.00034	11.9017	-0.7295	468.634
3832	1	Extremo 1A	10.358	-264.909	0.00034	11.9017	-0.7296	606.538
3832	0	Extremo 2A	10.353	-302.218	0.00297	11.2969	-0.7281	314.072
3832	0.5	Extremo 2A	10.353	-280.421	0.00297	11.2969	-0.7296	459.732
3832	1	Extremo 2A	10.353	-258.623	0.00297	11.2969	-0.7311	594.493
3833	0	Extremo 1A	10.358	-217.624	0.00044	9.9208	-0.7293	610.088
3833	0.5	Extremo 1A	10.358	-195.826	0.00044	9.9208	-0.7295	713.45
3833	1	Extremo 1A	10.358	-174.029	0.00044	9.9208	-0.7297	805.914
3833	0	Extremo 2A	10.351	-211.329	0.00378	9.3004	-0.7277	597.932
3833	0.5	Extremo 2A	10.351	-189.531	0.00378	9.3004	-0.7296	698.147
3833	1	Extremo 2A	10.351	-167.734	0.00378	9.3004	-0.7315	787.463
3834	0	Extremo 1A	10.358	-124.849	0.00056	5.5664	-0.7292	808.437
3834	0.5	Extremo 1A	10.358	-103.052	0.00056	5.5664	-0.7295	865.412
3834	1	Extremo 1A	10.358	-81.254	0.00056	5.5664	-0.7298	911.488
3834	0	Extremo 2A	10.348	-118.569	0.00482	4.9615	-0.7272	789.865
3834	0.5	Extremo 2A	10.348	-96.771	0.00482	4.9615	-0.7296	843.7
3834	1	Extremo 2A	10.348	-74.974	0.00482	4.9615	-0.732	886.636
3835	0	Extremo 1A	10.358	-31.306	0.00071	0.1298	-0.7291	912.402
3835	0.5	Extremo 1A	10.358	-9.508	0.00071	0.1298	-0.7295	922.605
3835	1	Extremo 1A	10.358	12.289	0.00071	0.1298	-0.7298	921.91
3835	0	Extremo 2A	10.345	-25.071	0.00613	-0.421	-0.7266	887.417
3835	0.5	Extremo 2A	10.345	-3.273	0.00613	-0.421	-0.7297	894.503
3835	1	Extremo 2A	10.345	18.524	0.00613	-0.421	-0.7327	890.69
3836	0	Extremo 1A	10.357	62.255	0.00091	-5.3369	-0.729	921.143
3836	0.5	Extremo 1A	10.357	84.053	0.00091	-5.3369	-0.7295	884.566
3836	1	Extremo 1A	10.357	105.85	0.00091	-5.3369	-0.7299	837.09
3836	0	Extremo 2A	10.34	68.396	0.00778	-5.7734	-0.7258	889.768
3836	0.5	Extremo 2A	10.34	90.194	0.00778	-5.7734	-0.7297	850.12
3836	1	Extremo 2A	10.34	111.991	0.00778	-5.7734	-0.7336	799.574
3837	0	Extremo 1A	10.357	155.092	0.00116	-9.792	-0.7289	834.715
3837	0.5	Extremo 1A	10.357	176.889	0.00116	-9.792	-0.7295	751.719
3837	1	Extremo 1A	10.357	198.687	0.00116	-9.792	-0.7301	657.825
3837	0	Extremo 2A	10.333	161.051	0.00988	-10.0092	-0.7248	797.007
3837	0.5	Extremo 2A	10.333	182.849	0.00988	-10.0092	-0.7297	711.032
3837	1	Extremo 2A	10.333	204.646	0.00988	-10.0092	-0.7347	614.158
3838	0	Extremo 1A	10.356	246.109	0.00148	-11.9747	-0.7288	654.402
3838	0.5	Extremo 1A	10.356	267.906	0.00148	-11.9747	-0.7295	525.899
3838	1	Extremo 1A	10.356	289.704	0.00148	-11.9747	-0.7303	386.496
3838	0	Extremo 2A	10.324	251.727	0.013	-11.7864	-0.7235	610.495
3838	0.5	Extremo 2A	10.324	273.524	0.013	-11.7864	-0.7297	479.183
3838	1	Extremo 2A	10.324	295.322	0.013	-11.7864	-0.736	336.971
3839	0	Extremo 1A	10.356	334.34	0.00188	-10.5392	-0.7286	384.895
3839	0.5	Extremo 1A	10.356	356.138	0.00188	-10.5392	-0.7295	212.275
3839	1	Extremo 1A	10.356	377.935	0.00188	-10.5392	-0.7305	28.757
3839	0	Extremo 2A	10.312	339.348	0.016	-9.6314	-0.7218	335.103
3839	0.5	Extremo 2A	10.312	361.145	0.016	-9.6314	-0.7298	159.98
3839	1	Extremo 2A	10.312	382.943	0.016	-9.6314	-0.7377	-26.0422
3840	0	Extremo 1A	10.354	427.552	0.0024	-5.2331	-0.7283	40.7067
3840	0.5	Extremo 1A	10.354	449.35	0.0024	-5.2331	-0.7295	-178.519
3840	1	Extremo 1A	10.354	471.147	0.0024	-5.2331	-0.7308	-408.643
3840	0	Extremo 2A	10.295	431.658	0.02	-3.1334	-0.7198	-14.2117
3840	0.5	Extremo 2A	10.295	453.455	0.02	-3.1334	-0.7298	-235.49
3840	1	Extremo 2A	10.295	475.253	0.02	-3.1334	-0.7398	-467.667
3841	0	Extremo 1A	10.353	598.587	0.00306	0.6712	-0.728	-346.2
3841	0.5	Extremo 1A	10.353	620.385	0.00306	0.6712	-0.7296	-650.943
3841	1	Extremo 1A	10.353	642.182	0.00306	0.6712	-0.7311	-966.585
3841	0	Extremo 2A	10.273	602.359	0.025	4.5384	-0.7171	-404.602
3841	0.5	Extremo 2A	10.273	624.157	0.025	4.5384	-0.7297	-711.231
3841	1	Extremo 2A	10.273	645.954	0.025	4.5384	-0.7423	-1028.76
3842	0	Extremo 1A	10.351	1224.85	0.0039	0.6485	-0.7276	-795.518
3842	0.5	Extremo 1A	10.351	1246.64	0.0039	0.6485	-0.7296	-1413.39
3842	1	Extremo 1A	10.351	1268.44	0.0039	0.6485	-0.7315	-2042.16
3842	0	Extremo 2A	10.242	1233.78	0.032	6.7609	-0.7138	-855.323
3842	0.5	Extremo 2A	10.242	1255.58	0.032	6.7609	-0.7296	-1477.66
3842	1	Extremo 2A	10.242	1277.38	0.032	6.7609	-0.7454	-2110.91
3843	0	Extremo 1A	10.348	-1241.97	0.00496	-3.6467	-0.7271	-2042.37
3843	0.5	Extremo 1A	10.348	-1220.18	0.00496	-3.6467	-0.7296	-1426.83
3843	1	Extremo 1A	10.348	-1198.38	0.00496	-3.6467	-0.7321	-822.191
3843	0	Extremo 2A	10.201	-1267.26	0.039	4.8812	-0.7097	-2110.28
3843	0.5	Extremo 2A	10.201	-1245.46	0.039	4.8812	-0.7294	-1482.1
3843	1	Extremo 2A	10.201	-1223.66	0.039	4.8812	-0.7491	-864.816
3844	0	Extremo 1A	10.345	-615.72	0.00631	-3.6631	-0.7265	-993.674
3844	0.5	Extremo 1A	10.345	-593.922	0.00631	-3.6631	-0.7297	-691.263
3844	1	Extremo 1A	10.345	-572.125	0.00631	-3.6631	-0.7328	-399.751
3844	0	Extremo 2A	10.146	-635.816	0.049	7.0778	-0.7045	-1036.99
3844	0.5	Extremo 2A	10.146	-614.018	0.049	7.0778	-0.729	-724.532
3844	1	Extremo 2A	10.146	-592.221	0.049	7.0778	-0.7535	-422.973
3845	0	Extremo 1A	10.34	-444.694	0.00802	2.2559	-0.7257	-462.613
3845	0.5	Extremo 1A	10.34	-422.897	0.00802	2.2559	-0.7297	-245.715
3845	1	Extremo 1A	10.34	-401.099	0.00802	2.2559	-0.7337	-39.7164
3845	0	Extremo 2A	10.072	-465.075	0.061	14.6898	-0.698	-484.765
3845	0.5	Extremo 2A	10.072	-443.277	0.061	14.6898	-0.7283	-257.678
3845	1	Extremo 2A	10.072	-421.48	0.061	14.6898	-0.7586	-41.4883
3846	0	Extremo 1A	10.333	-351.501	0.01	7.59	-0.7246	-52.091
3846	0.5	Extremo 1A	10.333	-329.704	0.01	7.59	-0.7297	118.21
3846	1	Extremo 1A	10.333	-307.906	0.01	7.59	-0.7348	277.613
3846	0	Extremo 2A	9.972	-372.688	0.074	21.0749	-0.6902	-52.0259
3846	0.5	Extremo 2A	9.972	-350.89	0.074	21.0749	-0.7272	128.869
3846	1	Extremo 2A	9.972	-329.093	0.074	21.0749	-0.7642	298.865
3847	0	Extremo 1A	10.324	-263.306	0.013	9.0767	-0.7233	278.778
3847	0.5	Extremo 1A	10.324	-241.509	0.013	9.0767	-0.7298	404.981
3847	1	Extremo 1A	10.324	-219.711	0.013	9.0767	-0.7362	520.286
3847	0	Extremo 2A	9.838	-284.926	0.089	23.0283	-0.6807	302.061
3847	0.5	Extremo 2A	9.838	-263.128	0.089	23.0283	-0.7254	439.074
3847	1	Extremo 2A	9.838	-241.331	0.089	23.0283	-0.7701	565.189
3848	0	Extremo 1A	10.311	-172.357	0.016	6.9866	-0.7216	523.252
3848	0.5	Extremo 1A	10.311	-150.56	0.016	6.9866	-0.7298	603.981
3848	1	Extremo 1A	10.311	-128.762	0.016	6.9866	-0.738	673.812
3848	0	Extremo 2A	9.659	-193.996	0.106	20.8976	-0.6695	570.238
3848	0.5	Extremo 2A	9.659	-172.198	0.106	20.8976	-0.7225	661.787
3848	1	Extremo 2A	9.659	-150.401	0.106	20.8976	-0.7755	742.437
3849	0	Extremo 1A	10.295	-79.648	0.021	2.6997	-0.7195	675.693
3849	0.5	Extremo 1A	10.295	-57.85	0.021	2.6997	-0.7298	710.067
3849	1	Extremo 1A	10.295	-36.053	0.021	2.6997	-0.7401	733.543
3849	0	Extremo 2A	9.42	-100.891	0.122	16.0495	-0.6569	746.476
3849	0.5	Extremo 2A	9.42	-79.093	0.122	16.0495	-0.7182	791.472
3849	1	Extremo 2A	9.42	-57.296	0.122	16.0495	-0.7794	825.569
3850	0	Extremo 1A	10.272	13.677	0.026	-2.459	-0.7168	733.753
3850	0.5	Extremo 1A	10.272	35.474	0.026	-2.459	-0.7298	721.465
3850	1	Extremo 1A	10.272	57.272	0.026	-2.459	-0.7427	698.279
3850	0	Extremo 2A	9.105	-6.64	0.136	9.6506	-0.6437	828.083
3850	0.5	Extremo 2A	9.105	15.157	0.136	9.6506	-0.7114	825.953
3850	1	Extremo 2A	9.105	36.955	0.136	9.6506	-0.7792	812.925
3851	0	Extremo 1A	10.241	106.777	0.033	-7.328	-0.7134	696.703
3851	0.5	Extremo 1A	10.241	128.574	0.033	-7.328	-0.7297	637.866
3851	1	Extremo 1A	10.241	150.372	0.033	-7.328	-0.746	568.129
3851	0	Extremo 2A	8.693	88.186	0.139	2.5163	-0.6316	813.877
3851	0.5	Extremo 2A	8.693	109.983	0.139	2.5163	-0.7012	764.335
3851	1	Extremo 2A	8.693	131.781	0.139	2.5163	-0.7708	703.894
3852	0	Extremo 1A	10.2	198.715	0.041	-10.6355	-0.7091	564.786
3852	0.5	Extremo 1A	10.2	220.513	0.041	-10.6355	-0.7295	459.979
3852	1	Extremo 1A	10.2	242.31	0.041	-10.6355	-0.7498	344.273
3852	0	Extremo 2A	8.165	183.125	0.122	-4.6671	-0.6245	703.339
3852	0.5	Extremo 2A	8.165	204.923	0.122	-4.6671	-0.6856	606.327
3852	1	Extremo 2A	8.165	226.72	0.122	-4.6671	-0.7466	498.416
3853	0	Extremo 1A	10.144	288.027	0.051	-10.7113	-0.7037	339.721
3853	0.5	Extremo 1A	10.144	309.824	0.051	-10.7113	-0.7291	190.258
3853	1	Extremo 1A	10.144	331.622	0.051	-10.7113	-0.7544	29.8967
3853	0	Extremo 2A	7.51	277.44	0.064	-11.0843	-0.6282	496.795

3853	0.5	Extremo 2A	7.51	299.237	0.064	-11.0843	-0.6601	352.625
3853	1	Extremo 2A	7.51	321.035	0.064	-11.0843	-0.692	197.557
3854	0	Extremo 1A	10.069	373.24	0.063	-5.6013	-0.6971	27.3579
3854	0.5	Extremo 1A	10.069	395.037	0.063	-5.6013	-0.7284	-164.711
3854	1	Extremo 1A	10.069	416.835	0.063	-5.6013	-0.7597	-367.679
3854	0	Extremo 2A	6.744	370.506	-0.065	-15.7764	-0.6454	197.494
3854	0.5	Extremo 2A	6.744	392.304	-0.065	-15.7764	-0.6129	6.7915
3854	1	Extremo 2A	6.744	414.101	-0.065	-15.7764	-0.5803	-194.81
3855	0	Extremo 1A	9.968	462.75	0.077	5.5728	-0.689	-354.716
3855	0.5	Extremo 1A	9.968	484.547	0.077	5.5728	-0.7273	-591.54
3855	1	Extremo 1A	9.968	506.345	0.077	5.5728	-0.7657	-839.263
3855	0	Extremo 2A	5.934	470.729	-0.27	-18.3168	-0.6519	-181.523
3855	0.5	Extremo 2A	5.934	492.527	-0.27	-18.3168	-0.517	-422.337
3855	1	Extremo 2A	5.934	514.324	-0.27	-18.3168	-0.382	-674.049
3856	0	Extremo 1A	9.833	639.446	0.093	19.6074	-0.6791	-768.13
3856	0.5	Extremo 1A	9.833	661.243	0.093	19.6074	-0.7255	-1093.3
3856	1	Extremo 1A	9.833	683.041	0.093	19.6074	-0.7719	-1429.37
3856	0	Extremo 2A	5.179	657.748	-0.388	-20.1021	-0.5589	-607.798
3856	0.5	Extremo 2A	5.179	679.545	-0.388	-20.1021	-0.3647	-942.121
3856	1	Extremo 2A	5.179	701.343	-0.388	-20.1021	-0.1706	-1287.34
3857	0	Extremo 1A	9.652	1334.55	0.11	28.9103	-0.6676	-1232.64
3857	0.5	Extremo 1A	9.652	1356.35	0.11	28.9103	-0.7227	-1905.37
3857	1	Extremo 1A	9.652	1378.15	0.11	28.9103	-0.7779	-2588.99
3857	0	Extremo 2A	4.424	1355.09	-0.27	-23.7898	-0.3474	-1102.23
3857	0.5	Extremo 2A	4.424	1376.88	-0.27	-23.7898	-0.2125	-1785.23
3857	1	Extremo 2A	4.424	1398.68	-0.27	-23.7898	-0.0777	-2479.12
3858	0	Extremo 1A	9.411	-1499.52	0.128	33.8996	-0.6544	-2584.85
3858	0.5	Extremo 1A	9.411	-1477.72	0.128	33.8996	-0.7184	-1840.54
3858	1	Extremo 1A	9.411	-1455.92	0.128	33.8996	-0.7824	-1107.13
3858	0	Extremo 2A	3.614	-1435.19	-0.065	-25.4804	-0.149	-2486.23
3858	0.5	Extremo 2A	3.614	-1413.4	-0.065	-25.4804	-0.1166	-1774.08
3858	1	Extremo 2A	3.614	-1391.6	-0.065	-25.4804	-0.0842	-1072.84
3859	0	Extremo 1A	9.093	-803.574	0.143	42.1425	-0.6404	-1295.51
3859	0.5	Extremo 1A	9.093	-781.777	0.143	42.1425	-0.7117	-899.168
3859	1	Extremo 1A	9.093	-759.979	0.143	42.1425	-0.7831	-513.729
3859	0	Extremo 2A	2.848	-745.177	0.064	-18.5328	-0.0372	-1269.12
3859	0.5	Extremo 2A	2.848	-723.379	0.064	-18.5328	-0.0694	-901.984
3859	1	Extremo 2A	2.848	-701.582	0.064	-18.5328	-0.1016	-545.744
3860	0	Extremo 1A	8.676	-624.95	0.148	53.744	-0.6274	-576.266
3860	0.5	Extremo 1A	8.676	-603.152	0.148	53.744	-0.7016	-269.24
3860	1	Extremo 1A	8.676	-581.355	0.148	53.744	-0.7757	26.887
3860	0	Extremo 2A	2.193	-569.36	0.123	-5.0342	0.0175	-616.648
3860	0.5	Extremo 2A	2.193	-547.562	0.123	-5.0342	-0.044	-337.418
3860	1	Extremo 2A	2.193	-525.765	0.123	-5.0342	-0.1054	-69.086
3861	0	Extremo 1A	8.142	-531.855	0.134	60.4356	-0.6192	22.8832
3861	0.5	Extremo 1A	8.142	-510.057	0.134	60.4356	-0.686	283.361
3861	1	Extremo 1A	8.142	-488.26	0.134	60.4356	-0.7527	532.941
3861	0	Extremo 2A	1.664	-480.182	0.14	6.0523	0.0419	-81.8663
3861	0.5	Extremo 2A	1.664	-458.384	0.14	6.0523	-0.0283	152.775
3861	1	Extremo 2A	1.664	-436.587	0.14	6.0523	-0.0985	376.518
3862	0	Extremo 1A	7.479	-440.446	0.078	57.9115	-0.6214	544.783
3862	0.5	Extremo 1A	7.479	-418.648	0.078	57.9115	-0.6606	759.556
3862	1	Extremo 1A	7.479	-396.851	0.078	57.9115	-0.6998	963.431
3862	0	Extremo 2A	1.252	-395.15	0.137	11.1196	0.0505	379.224
3862	0.5	Extremo 2A	1.252	-373.352	0.137	11.1196	-0.0181	571.35
3862	1	Extremo 2A	1.252	-351.555	0.137	11.1196	-0.0867	752.576
3863	0	Extremo 1A	6.701	-341.07	-0.047	45.601	-0.6368	977.134
3863	0.5	Extremo 1A	6.701	-319.273	-0.047	45.601	-0.6134	1142.22
3863	1	Extremo 1A	6.701	-297.475	-0.047	45.601	-0.5901	1296.41
3863	0	Extremo 2A	0.936	-305.913	0.125	11.0109	0.0509	757.258
3863	0.5	Extremo 2A	0.936	-284.116	0.125	11.0109	-0.0114	904.765
3863	1	Extremo 2A	0.936	-262.318	0.125	11.0109	-0.0737	1041.37
3864	0	Extremo 1A	5.877	-234.549	-0.246	24.3426	-0.6408	1307.1
3864	0.5	Extremo 1A	5.877	-212.752	-0.246	24.3426	-0.5176	1418.93
3864	1	Extremo 1A	5.877	-190.954	-0.246	24.3426	-0.3944	1519.85
3864	0	Extremo 2A	0.696	-213.996	0.109	7.7198	0.0473	1044.81
3864	0.5	Extremo 2A	0.696	-192.199	0.109	7.7198	-0.007	1146.36
3864	1	Extremo 2A	0.696	-170.401	0.109	7.7198	-0.0614	1237.01
3865	0	Extremo 1A	5.101	-124.277	-0.359	-3.0355	-0.5448	1523.88
3865	0.5	Extremo 1A	5.101	-102.479	-0.359	-3.0355	-0.3655	1580.57
3865	1	Extremo 1A	5.101	-80.682	-0.359	-3.0355	-0.1861	1626.36
3865	0	Extremo 2A	0.516	-120.903	0.093	2.953	0.0422	1238.64
3865	0.5	Extremo 2A	0.516	-99.105	0.093	2.953	-0.0042	1293.64
3865	1	Extremo 2A	0.516	-77.308	0.093	2.953	-0.0506	1337.75
3866	0	Extremo 1A	4.317	-14.09	-0.232	-30.2775	-0.3295	1621.79
3866	0.5	Extremo 1A	4.317	7.708	-0.232	-30.2775	-0.2133	1623.38
3866	1	Extremo 1A	4.317	29.505	-0.232	-30.2775	-0.0972	1614.08
3866	0	Extremo 2A	0.38	-27.601	0.078	-2.0001	0.0367	1337.6
3866	0.5	Extremo 2A	0.38	-5.803	0.078	-2.0001	-0.0025	1345.95
3866	1	Extremo 2A	0.38	15.994	0.078	-2.0001	-0.0417	1343.4
3867	0	Extremo 1A	3.471	92.163	-0.018	-51.1617	-0.1264	1602.9
3867	0.5	Extremo 1A	3.471	113.961	-0.018	-51.1617	-0.1175	1551.37
3867	1	Extremo 1A	3.471	135.758	-0.018	-51.1617	-0.1086	1488.94
3867	0	Extremo 2A	0.278	65.066	0.066	-6.031	0.0317	1341.74
3867	0.5	Extremo 2A	0.278	86.864	0.066	-6.031	-0.0014	1303.76
3867	1	Extremo 2A	0.278	108.661	0.066	-6.031	-0.0345	1254.88
3868	0	Extremo 1A	2.654	191.501	0.123	-63.0869	-0.0091	1475.29
3868	0.5	Extremo 1A	2.654	213.299	0.123	-63.0869	-0.0706	1374.09
3868	1	Extremo 1A	2.654	235.096	0.123	-63.0869	-0.1321	1261.99
3868	0	Extremo 2A	0.201	156.424	0.056	-8.1159	0.0273	1252.98
3868	0.5	Extremo 2A	0.201	178.221	0.056	-8.1159	-0.00084	1169.32
3868	1	Extremo 2A	0.201	200.019	0.056	-8.1159	-0.0289	1074.76
3869	0	Extremo 1A	1.93	287.295	0.195	-65.984	0.051	1252.62
3869	0.5	Extremo 1A	1.93	309.093	0.195	-65.984	-0.0464	1103.53
3869	1	Extremo 1A	1.93	330.89	0.195	-65.984	-0.1438	943.529
3869	0	Extremo 2A	0.141	249.824	0.048	-7.7647	0.0235	1077.92
3869	0.5	Extremo 2A	0.141	271.622	0.048	-7.7647	-0.00068	947.562
3869	1	Extremo 2A	0.141	293.419	0.048	-7.7647	-0.0249	806.302
3870	0	Extremo 1A	1.309	413.083	0.224	-61.7697	0.0774	955.809
3870	0.5	Extremo 1A	1.309	434.881	0.224	-61.7697	-0.0344	743.818
3870	1	Extremo 1A	1.309	456.678	0.224	-61.7697	-0.1462	520.929
3870	0	Extremo 2A	0.094	378.494	0.042	-6.1545	0.0201	831.441
3870	0.5	Extremo 2A	0.094	400.292	0.042	-6.1545	-0.001	636.744
3870	1	Extremo 2A	0.094	422.089	0.042	-6.1545	-0.0222	431.149
3871	0	Extremo 1A	0.775	740.405	0.217	-54.2428	0.076	582.051
3871	0.5	Extremo 1A	0.775	762.202	0.217	-54.2428	-0.0326	206.399
3871	1	Extremo 1A	0.775	784	0.217	-54.2428	-0.1412	-180.151
3871	0	Extremo 2A	0.056	715.517	0.036	-6.1622	0.016	505.304
3871	0.5	Extremo 2A	0.056	737.314	0.036	-6.1622	-0.0022	142.096
3871	1	Extremo 2A	0.056	759.112	0.036	-6.1622	-0.0205	-232.011
3872	0	Extremo 1A	0.322	-316.163	0.153	-42.3317	0.0426	-195.073
3872	0.5	Extremo 1A	0.322	-294.365	0.153	-42.3317	-0.0339	-42.4415
3872	1	Extremo 1A	0.322	-272.568	0.153	-42.3317	-0.1103	99.2917
3872	0	Extremo 2A	0.024	-345.528	0.026	-6.9103	0.0091	-235.44
3872	0.5	Extremo 2A	0.024	-323.73	0.026	-6.9103	-0.004	-68.125
3872	1	Extremo 2A	0.024	-301.933	0.026	-6.9103	-0.0171	88.2909
3873	0	Extremo 1A	-2.971	76.676	-1.371	25.8552	-0.0706	-130.575
3873	0.5	Extremo 1A	-2.971	92.301	-1.371	25.8552	0.6149	-172.819
3873	1	Extremo 1A	-2.971	107.926	-1.371	25.8552	1.3004	-222.875
3873	0	Extremo 2A	-2.971	76.676	-1.371	25.8552	-0.0706	-130.575
3873	0.5	Extremo 2A	-2.971	92.301	-1.371	25.8552	0.6149	-172.819
3873	1	Extremo 2A	-2.971	107.926	-1.371	25.8552	1.3004	-222.875
3874	0	Extremo 1A	-3.829	-95.41	-0.788	-28.0705	0.9955	-223.353
3874	0.5	Extremo 1A	-3.829	-79.785	-0.788	-28.0705	1.3896	-179.554
3874	1	Extremo 1A	-3.829	-64.16	-0.788	-28.0705	1.7836	-143.567
3874	0	Extremo 2A	-3.829	-95.41	-0.788	-28.0705	0.9955	-223.353
3874	0.5	Extremo 2A	-3.829	-79.785	-0.788	-28.0705	1.3896	-179.554
3874	1	Extremo 2A	-3.829	-64.16	-0.788	-28.0705	1.7836	-143.567
3875	0	Extremo 1A	-2.312	-51.37	1.566	-17.3277	3.0481	-120.201
3875	0.5	Extremo 1A	-2.312	-35.745	1.566	-17.3277	2.2649	-98.4219
3875	1	Extremo 1A	-2.312	-20.12	1.566	-17.3277	1.4818	-84.4558
3875	0	Extremo 2A	-2.312	-51.37	1.566	-17.3277	3.0481	-120.201
3875	0.5	Extremo 2A	-2.312	-35.745	1.566	-17.3277	2.2649	-98.4219
3875	1	Extremo 2A	-2.312	-20.12	1.566	-17.3277	1.4818	-84.4558
3876	0	Extremo 1A	4.086	41.056	8.241	-0.1448	5.7389	-76.4918
3876	0.5	Extremo 1A	4.086	56.681	8.241	-0.1448	1.6186	-100.926
3876	1	Extremo 1A	4.086	72.306	8.241	-0.1448	-2.5018	-133.173
3876	0	Extremo 2A	4.086	41.056	8.241	-0.1448	5.7389	-76.4918
3876	0.5	Extremo 2A	4.086	56.681	8.241	-0.1448	1.6186	-100.926
3876	1	Extremo 2A	4.086	72.306	8.241	-0.1448	-2.5018	-133.173
3877	0	Extremo 1A	16.563	82.544	19.874	13.9535	4.276	-141.876
3877	0.5	Extremo 1A	16.563	98.169	19.874	13.9535	-5.6612	-187.054
3877	1	Extremo 1A	16.563	113.794	19.874	13.9535	-15.5985	-240.045
3877	0	Extremo 2A	16.563	82.544	19.874	13.9535	4.276	-141.876

3877	0.5	Extremo 2A	16.563	98.169	19.874	13.9535	-5.6612	-187.054
3877	1	Extremo 2A	16.563	113.794	19.874	13.9535	-15.5985	-240.045
3878	0	Extremo 1A	17.056	-103.878	-17.753	-34.3726	-15.2173	-226.244
3878	0.5	Extremo 1A	17.056	-88.253	-17.753	-34.3726	-6.3409	-178.212
3878	1	Extremo 1A	17.056	-72.628	-17.753	-34.3726	2.5356	-137.991
3878	0	Extremo 2A	17.056	-103.878	-17.753	-34.3726	-15.2173	-226.244
3878	0.5	Extremo 2A	17.056	-88.253	-17.753	-34.3726	-6.3409	-178.212
3878	1	Extremo 2A	17.056	-72.628	-17.753	-34.3726	2.5356	-137.991
3879	0	Extremo 1A	0.239	292.968	-1.502	2.2765	-0.3054	-63.3796
3879	0.5	Extremo 1A	0.239	308.593	-1.502	2.2765	0.4454	-213.77
3879	1	Extremo 1A	0.239	324.218	-1.502	2.2765	1.1962	-371.973
3879	0	Extremo 2A	0.239	292.968	-1.502	2.2765	-0.3054	-63.3796
3879	0.5	Extremo 2A	0.239	308.593	-1.502	2.2765	0.4454	-213.77
3879	1	Extremo 2A	0.239	324.218	-1.502	2.2765	1.1962	-371.973
3880	0	Extremo 1A	0.768	-322.839	-0.3	0.1362	0.8578	-373.75
3880	0.5	Extremo 1A	0.768	-307.214	-0.3	0.1362	1.0079	-216.236
3880	1	Extremo 1A	0.768	-291.589	-0.3	0.1362	1.158	-66.5354
3880	0	Extremo 2A	0.768	-322.84	-0.3	0.1362	0.8578	-373.75
3880	0.5	Extremo 2A	0.768	-307.215	-0.3	0.1362	1.0079	-216.236
3880	1	Extremo 2A	0.768	-291.59	-0.3	0.1362	1.158	-66.5353
3881	0	Extremo 1A	1.444	-81.35	2.795	-5.7886	3.1107	-111.494
3881	0.5	Extremo 1A	1.444	-65.725	2.795	-5.7886	1.7131	-74.7255
3881	1	Extremo 1A	1.444	-50.1	2.795	-5.7886	0.3155	-45.7691
3881	0	Extremo 2A	1.444	-81.35	2.795	-5.7886	3.1107	-111.494
3881	0.5	Extremo 2A	1.444	-65.725	2.795	-5.7886	1.7131	-74.7255
3881	1	Extremo 2A	1.444	-50.1	2.795	-5.7886	0.3155	-45.7691
3882	0	Extremo 1A	1.578	57.09	9.363	-14.6945	6.8185	-42.8327
3882	0.5	Extremo 1A	1.578	72.715	9.363	-14.6945	2.137	-75.2841
3882	1	Extremo 1A	1.578	88.34	9.363	-14.6945	-2.5445	-115.548
3882	0	Extremo 2A	1.578	57.09	9.363	-14.6945	6.8185	-42.8327
3882	0.5	Extremo 2A	1.578	72.715	9.363	-14.6945	2.137	-75.2841
3882	1	Extremo 2A	1.578	88.34	9.363	-14.6945	-2.5445	-115.548
3883	0	Extremo 1A	0.429	309.354	32.813	-19.5413	11.1499	-63.0913
3883	0.5	Extremo 1A	0.429	324.979	32.813	-19.5413	-5.2564	-221.675
3883	1	Extremo 1A	0.429	340.604	32.813	-19.5413	-21.6626	-388.07
3883	0	Extremo 2A	0.429	309.354	32.813	-19.5413	11.1499	-63.0912
3883	0.5	Extremo 2A	0.429	324.979	32.813	-19.5413	-5.2564	-221.675
3883	1	Extremo 2A	0.429	340.604	32.813	-19.5413	-21.6626	-388.07
3884	0	Extremo 1A	0.067	-314.633	-30.653	-20.1044	-21.2548	-378.573
3884	0.5	Extremo 1A	0.067	-299.008	-30.653	-20.1044	-5.9285	-225.163
3884	1	Extremo 1A	0.067	-283.383	-30.653	-20.1044	9.3977	-79.5651
3884	0	Extremo 2A	0.067	-314.633	-30.653	-20.1044	-21.2548	-378.573
3884	0.5	Extremo 2A	0.067	-299.008	-30.653	-20.1044	-5.9285	-225.163
3884	1	Extremo 2A	0.067	-283.383	-30.653	-20.1044	9.3977	-79.5651
3885	0	Extremo 1A	0.722	79.473	-1.146	-19.555	-0.2232	-130.264
3885	0.5	Extremo 1A	0.722	95.098	-1.146	-19.555	0.35	-173.906
3885	1	Extremo 1A	0.722	110.723	-1.146	-19.555	0.9231	-225.361
3885	0	Extremo 2A	0.722	79.473	-1.146	-19.555	-0.2232	-130.264
3885	0.5	Extremo 2A	0.722	95.098	-1.146	-19.555	0.35	-173.906
3885	1	Extremo 2A	0.722	110.723	-1.146	-19.555	0.9231	-225.361
3886	0	Extremo 1A	1.129	-86.905	0.243	26.1204	0.9049	-226.031
3886	0.5	Extremo 1A	1.129	-71.28	0.243	26.1204	0.7835	-186.485
3886	1	Extremo 1A	1.129	-55.655	0.243	26.1204	0.6622	-154.751
3886	0	Extremo 2A	1.129	-86.905	0.243	26.1204	0.9049	-226.031
3886	0.5	Extremo 2A	1.129	-71.28	0.243	26.1204	0.7835	-186.485
3886	1	Extremo 2A	1.129	-55.655	0.243	26.1204	0.6622	-154.751
3887	0	Extremo 1A	1.17	-50.958	3.379	5.6476	2.9112	-146.287
3887	0.5	Extremo 1A	1.17	-35.333	3.379	5.6476	1.2219	-124.714
3887	1	Extremo 1A	1.17	-19.708	3.379	5.6476	-0.4674	-110.954
3887	0	Extremo 2A	1.17	-50.958	3.379	5.6476	2.9112	-146.287
3887	0.5	Extremo 2A	1.17	-35.333	3.379	5.6476	1.2219	-124.714
3887	1	Extremo 2A	1.17	-19.708	3.379	5.6476	-0.4674	-110.954
3888	0	Extremo 1A	0.048	21.001	9.052	-27.9995	5.4269	-111.421
3888	0.5	Extremo 1A	0.048	36.626	9.052	-27.9995	0.901	-125.828
3888	1	Extremo 1A	0.048	52.251	9.052	-27.9995	-3.6249	-148.047
3888	0	Extremo 2A	0.048	21.001	9.052	-27.9995	5.4269	-111.421
3888	0.5	Extremo 2A	0.048	36.626	9.052	-27.9995	0.901	-125.828
3888	1	Extremo 2A	0.048	52.251	9.052	-27.9995	-3.6249	-148.047
3889	0	Extremo 1A	-3.909	57.512	16.331	-49.4695	5.0099	-157.542
3889	0.5	Extremo 1A	-3.909	73.137	16.331	-49.4695	-3.1555	-190.204
3889	1	Extremo 1A	-3.909	88.762	16.331	-49.4695	-11.3209	-230.679
3889	0	Extremo 2A	-3.909	57.512	16.331	-49.4695	5.0099	-157.542
3889	0.5	Extremo 2A	-3.909	73.137	16.331	-49.4695	-3.1555	-190.204
3889	1	Extremo 2A	-3.909	88.762	16.331	-49.4695	-11.3209	-230.679
3890	0	Extremo 1A	-4.174	-115.635	-15.306	-5.326	-11.1588	-230.323
3890	0.5	Extremo 1A	-4.174	-100.01	-15.306	-5.326	-3.506	-176.411
3890	1	Extremo 1A	-4.174	-84.385	-15.306	-5.326	4.1467	-130.313
3890	0	Extremo 2A	-4.174	-115.635	-15.306	-5.326	-11.1588	-230.323
3890	0.5	Extremo 2A	-4.174	-100.01	-15.306	-5.326	-3.506	-176.411
3890	1	Extremo 2A	-4.174	-84.385	-15.306	-5.326	4.1467	-130.313
3891	0	Extremo 1A	0.548	27.517	-0.758	-5.4041	-0.0739	-130.16
3891	0.5	Extremo 1A	0.548	43.142	-0.758	-5.4041	0.3049	-147.824
3891	1	Extremo 1A	0.548	58.767	-0.758	-5.4041	0.6838	-173.302
3891	0	Extremo 2A	0.548	27.517	-0.758	-5.4041	-0.0739	-130.16
3891	0.5	Extremo 2A	0.548	43.142	-0.758	-5.4041	0.3049	-147.824
3891	1	Extremo 2A	0.548	58.767	-0.758	-5.4041	0.6838	-173.302
3892	0	Extremo 1A	0.732	-11.47	0.57	11.0094	0.9149	-172.614
3892	0.5	Extremo 1A	0.732	4.155	0.57	11.0094	0.6299	-170.785
3892	1	Extremo 1A	0.732	19.78	0.57	11.0094	0.3449	-176.769
3892	0	Extremo 2A	0.732	-11.47	0.57	11.0094	0.9149	-172.614
3892	0.5	Extremo 2A	0.732	4.155	0.57	11.0094	0.6299	-170.785
3892	1	Extremo 2A	0.732	19.78	0.57	11.0094	0.3449	-176.769
3893	0	Extremo 1A	0.477	-21.613	3.286	1.8193	2.4873	-167.864
3893	0.5	Extremo 1A	0.477	-5.988	3.286	1.8193	0.8441	-160.963
3893	1	Extremo 1A	0.477	9.637	3.286	1.8193	-0.799	-161.876
3893	0	Extremo 2A	0.477	-21.613	3.286	1.8193	2.4873	-167.864
3893	0.5	Extremo 2A	0.477	-5.988	3.286	1.8193	0.8441	-160.963
3893	1	Extremo 2A	0.477	9.637	3.286	1.8193	-0.799	-161.876
3894	0	Extremo 1A	-0.81	-13.543	7.197	-19.8642	3.9012	-165.347
3894	0.5	Extremo 1A	-0.81	2.082	7.197	-19.8642	0.3027	-162.481
3894	1	Extremo 1A	-0.81	17.707	7.197	-19.8642	-3.2957	-167.429
3894	0	Extremo 2A	-0.81	-13.543	7.197	-19.8642	3.9012	-165.347
3894	0.5	Extremo 2A	-0.81	2.082	7.197	-19.8642	0.3027	-162.481
3894	1	Extremo 2A	-0.81	17.707	7.197	-19.8642	-3.2957	-167.429
3895	0	Extremo 1A	-3.518	-27.102	8.492	-29.3418	2.3124	-183.535
3895	0.5	Extremo 1A	-3.518	-11.477	8.492	-29.3418	-1.9337	-173.89
3895	1	Extremo 1A	-3.518	4.148	8.492	-29.3418	-6.1798	-172.058
3895	0	Extremo 2A	-3.518	-27.102	8.492	-29.3418	2.3124	-183.535
3895	0.5	Extremo 2A	-3.518	-11.477	8.492	-29.3418	-1.9337	-173.89
3895	1	Extremo 2A	-3.518	4.148	8.492	-29.3418	-6.1798	-172.058
3896	0	Extremo 1A	-3.586	-74.064	-8.172	-12.9689	-6.2188	-179.9
3896	0.5	Extremo 1A	-3.586	-58.439	-8.172	-12.9689	-2.1326	-146.774
3896	1	Extremo 1A	-3.586	-42.814	-8.172	-12.9689	1.9536	-121.46
3896	0	Extremo 2A	-3.586	-74.064	-8.172	-12.9689	-6.2188	-179.9
3896	0.5	Extremo 2A	-3.586	-58.439	-8.172	-12.9689	-2.1326	-146.774
3896	1	Extremo 2A	-3.586	-42.814	-8.172	-12.9689	1.9536	-121.46
3897	0	Extremo 1A	0.379	23.022	-0.475	-0.1612	0.0305	-122.885
3897	0.5	Extremo 1A	0.379	38.647	-0.475	-0.1612	0.2679	-138.302
3897	1	Extremo 1A	0.379	54.272	-0.475	-0.1612	0.5053	-161.532
3897	0	Extremo 2A	0.379	23.022	-0.475	-0.1612	0.0305	-122.885
3897	0.5	Extremo 2A	0.379	38.647	-0.475	-0.1612	0.2679	-138.302
3897	1	Extremo 2A	0.379	54.272	-0.475	-0.1612	0.5053	-161.532
3898	0	Extremo 1A	0.444	6.109	0.702	3.5792	0.8508	-160.768
3898	0.5	Extremo 1A	0.444	21.734	0.702	3.5792	0.5	-167.729
3898	1	Extremo 1A	0.444	37.359	0.702	3.5792	0.1491	-182.502
3898	0	Extremo 2A	0.444	6.109	0.702	3.5792	0.8508	-160.768
3898	0.5	Extremo 2A	0.444	21.734	0.702	3.5792	0.5	-167.729
3898	1	Extremo 2A	0.444	37.359	0.702	3.5792	0.1491	-182.502
3899	0	Extremo 1A	0.122	-11.166	2.86	-0.0932	2	-179.849
3899	0.5	Extremo 1A	0.122	4.459	2.86	-0.0932	0.5699	-178.172
3899	1	Extremo 1A	0.122	20.084	2.86	-0.0932	-0.8602	-184.307
3899	0	Extremo 2A	0.122	-11.166	2.86	-0.0932	2	-179.849
3899	0.5	Extremo 2A	0.122	4.459	2.86	-0.0932	0.5699	-178.172
3899	1	Extremo 2A	0.122	20.084	2.86	-0.0932	-0.8602	-184.307
3900	0	Extremo 1A	-0.935	-27.433	5.283	-8.8569	2.6887	-189.506
3900	0.5	Extremo 1A	-0.935	-11.808	5.283	-8.8569	0.0471	-179.696
3900	1	Extremo 1A	-0.935	3.817	5.283	-8.8569	-2.5945	-177.698
3900	0	Extremo 2A	-0.935	-27.433	5.283	-8.8569	2.6887	-189.506
3900	0.5	Extremo 2A	-0.935	-11.808	5.283	-8.8569	0.0471	-179.696
3900	1	Extremo 2A	-0.935	3.817	5.283	-8.8569	-2.5945	-177.698
3901	0	Extremo 1A	-2.576	-48.708	4.605	-12.3074	1.0517	-190.739
3901	0.5	Extremo 1A	-2.576	-33.083	4.605	-12.3074	-1.2509	-170.291
3901	1	Extremo 1A	-2.576	-17.458	4.605	-12.3074	-3.5535	-157.656
3901	0	Extremo 2A	-2.576	-48.708	4.605	-12.3074	1.0517	-190.739

3901	0.5	Extremo 2A	-2.576	-33.083	4.605	-12.3074	-1.2509	-170.291
3901	1	Extremo 2A	-2.576	-17.458	4.605	-12.3074	-3.5535	-157.656
3902	0	Extremo 1A	-2.576	-72.229	-4.606	-7.0241	-3.6807	-168.515
3902	0.5	Extremo 1A	-2.576	-56.604	-4.606	-7.0241	-1.3779	-136.307
3902	1	Extremo 1A	-2.576	-40.979	-4.606	-7.0241	0.925	-111.911
3902	0	Extremo 2A	-2.576	-72.229	-4.606	-7.0241	-3.6807	-168.515
3902	0.5	Extremo 2A	-2.576	-56.604	-4.606	-7.0241	-1.3779	-136.307
3902	1	Extremo 2A	-2.576	-40.979	-4.606	-7.0241	0.925	-111.911
3903	0	Extremo 1A	0.28	24.089	-0.283	0.3402	0.0869	-120.106
3903	0.5	Extremo 1A	0.28	39.714	-0.283	0.3402	0.2284	-136.057
3903	1	Extremo 1A	0.28	55.339	-0.283	0.3402	0.37	-159.82
3903	0	Extremo 2A	0.28	24.089	-0.283	0.3402	0.0869	-120.106
3903	0.5	Extremo 2A	0.28	39.714	-0.283	0.3402	0.2284	-136.057
3903	1	Extremo 2A	0.28	55.339	-0.283	0.3402	0.37	-159.82
3904	0	Extremo 1A	0.291	9.87	0.718	1.2623	0.7452	-158.739
3904	0.5	Extremo 1A	0.291	25.495	0.718	1.2623	0.3863	-167.58
3904	1	Extremo 1A	0.291	41.12	0.718	1.2623	0.0274	-184.234
3904	0	Extremo 2A	0.291	9.87	0.718	1.2623	0.7452	-158.739
3904	0.5	Extremo 2A	0.291	25.495	0.718	1.2623	0.3863	-167.58
3904	1	Extremo 2A	0.291	41.12	0.718	1.2623	0.0274	-184.234
3905	0	Extremo 1A	-0.016	-8.493	2.352	1.3454	1.552	-183.64
3905	0.5	Extremo 1A	-0.016	7.132	2.352	1.3454	0.376	-183.299
3905	1	Extremo 1A	-0.016	22.757	2.352	1.3454	-0.8	-190.772
3905	0	Extremo 2A	-0.016	-8.493	2.352	1.3454	1.552	-183.64
3905	0.5	Extremo 2A	-0.016	7.132	2.352	1.3454	0.376	-183.299
3905	1	Extremo 2A	-0.016	22.757	2.352	1.3454	-0.8	-190.772
3906	0	Extremo 1A	-0.819	-30.78	3.768	0.8457	1.8262	-196.329
3906	0.5	Extremo 1A	-0.819	-15.155	3.768	0.8457	-0.0576	-184.845
3906	1	Extremo 1A	-0.819	0.47	3.768	0.8457	-1.9415	-181.174
3906	0	Extremo 2A	-0.819	-30.78	3.768	0.8457	1.8262	-196.329
3906	0.5	Extremo 2A	-0.819	-15.155	3.768	0.8457	-0.0576	-184.845
3906	1	Extremo 2A	-0.819	0.47	3.768	0.8457	-1.9415	-181.174
3907	0	Extremo 1A	-1.836	-53.248	2.612	1.1737	0.4653	-192.766
3907	0.5	Extremo 1A	-1.836	-37.623	2.612	1.1737	-0.8408	-170.049
3907	1	Extremo 1A	-1.836	-21.998	2.612	1.1737	-2.1469	-155.144
3907	0	Extremo 2A	-1.836	-53.248	2.612	1.1737	0.4653	-192.766
3907	0.5	Extremo 2A	-1.836	-37.623	2.612	1.1737	-0.8408	-170.049
3907	1	Extremo 2A	-1.836	-21.998	2.612	1.1737	-2.1469	-155.144
3908	0	Extremo 1A	-1.822	-73.487	-2.748	4.522	-2.3008	-166.825
3908	0.5	Extremo 1A	-1.822	-57.862	-2.748	4.522	-0.9267	-133.988
3908	1	Extremo 1A	-1.822	-42.237	-2.748	4.522	0.4474	-108.963
3908	0	Extremo 2A	-1.822	-73.487	-2.748	4.522	-2.3008	-166.825
3908	0.5	Extremo 2A	-1.822	-57.862	-2.748	4.522	-0.9267	-133.988
3908	1	Extremo 2A	-1.822	-42.237	-2.748	4.522	0.4474	-108.963
3909	0	Extremo 1A	0.216	22.517	-0.153	-0.3562	0.1126	-122.55
3909	0.5	Extremo 1A	0.216	38.142	-0.153	-0.3562	0.1889	-137.715
3909	1	Extremo 1A	0.216	53.767	-0.153	-0.3562	0.2653	-160.692
3909	0	Extremo 2A	0.216	22.517	-0.153	-0.3562	0.1126	-122.55
3909	0.5	Extremo 2A	0.216	38.142	-0.153	-0.3562	0.1889	-137.715
3909	1	Extremo 2A	0.216	53.767	-0.153	-0.3562	0.2653	-160.692
3910	0	Extremo 1A	0.201	9.748	0.674	-1.6792	0.6283	-157.901
3910	0.5	Extremo 1A	0.201	25.373	0.674	-1.6792	0.2915	-166.681
3910	1	Extremo 1A	0.201	40.998	0.674	-1.6792	-0.0452	-183.274
3910	0	Extremo 2A	0.201	9.748	0.674	-1.6792	0.6283	-157.901
3910	0.5	Extremo 2A	0.201	25.373	0.674	-1.6792	0.2915	-166.681
3910	1	Extremo 2A	0.201	40.998	0.674	-1.6792	-0.0452	-183.274
3911	0	Extremo 1A	-0.068	-7.749	1.873	2.2573	1.1801	-178.932
3911	0.5	Extremo 1A	-0.068	7.876	1.873	2.2573	0.2435	-178.964
3911	1	Extremo 1A	-0.068	23.501	1.873	2.2573	-0.6931	-186.808
3911	0	Extremo 2A	-0.068	-7.749	1.873	2.2573	1.1801	-178.932
3911	0.5	Extremo 2A	-0.068	7.876	1.873	2.2573	0.2435	-178.964
3911	1	Extremo 2A	-0.068	23.501	1.873	2.2573	-0.6931	-186.808
3912	0	Extremo 1A	-0.666	-29.061	2.663	10.4722	1.2381	-191.334
3912	0.5	Extremo 1A	-0.666	-13.436	2.663	10.4722	-0.0933	-180.71
3912	1	Extremo 1A	-0.666	2.189	2.663	10.4722	-1.4246	-177.898
3912	0	Extremo 2A	-0.666	-29.061	2.663	10.4722	1.2381	-191.334
3912	0.5	Extremo 2A	-0.666	-13.436	2.663	10.4722	-0.0933	-180.71
3912	1	Extremo 2A	-0.666	2.189	2.663	10.4722	-1.4246	-177.898
3913	0	Extremo 1A	-1.319	-51.405	1.543	14.8095	0.1913	-191.465
3913	0.5	Extremo 1A	-1.319	-35.78	1.543	14.8095	-0.5803	-169.669
3913	1	Extremo 1A	-1.319	-20.155	1.543	14.8095	-1.3519	-155.685
3913	0	Extremo 2A	-1.319	-51.405	1.543	14.8095	0.1913	-191.465
3913	0.5	Extremo 2A	-1.319	-35.78	1.543	14.8095	-0.5803	-169.669
3913	1	Extremo 2A	-1.319	-20.155	1.543	14.8095	-1.3519	-155.685
3914	0	Extremo 1A	-1.303	-71.734	-1.737	16.9289	-1.5082	-167.876
3914	0.5	Extremo 1A	-1.303	-56.109	-1.737	16.9289	-0.6397	-135.915
3914	1	Extremo 1A	-1.303	-40.484	-1.737	16.9289	0.2288	-111.767
3914	0	Extremo 2A	-1.303	-71.734	-1.737	16.9289	-1.5082	-167.876
3914	0.5	Extremo 2A	-1.303	-56.109	-1.737	16.9289	-0.6397	-135.915
3914	1	Extremo 2A	-1.303	-40.484	-1.737	16.9289	0.2288	-111.767
3915	0	Extremo 1A	0.167	18.592	-0.065	1.5127	0.1203	-134.986
3915	0.5	Extremo 1A	0.167	34.217	-0.065	1.5127	0.1527	-148.189
3915	1	Extremo 1A	0.167	49.842	-0.065	1.5127	0.1851	-169.203
3915	0	Extremo 2A	0.167	18.592	-0.065	1.5127	0.1203	-134.986
3915	0.5	Extremo 2A	0.167	34.217	-0.065	1.5127	0.1527	-148.189
3915	1	Extremo 2A	0.167	49.842	-0.065	1.5127	0.1851	-169.203
3916	0	Extremo 1A	0.138	0.414	0.601	-12.0931	0.5167	-164.055
3916	0.5	Extremo 1A	0.138	16.039	0.601	-12.0931	0.2164	-168.168
3916	1	Extremo 1A	0.138	31.664	0.601	-12.0931	-0.0838	-180.094
3916	0	Extremo 2A	0.138	0.414	0.601	-12.093	0.5167	-164.055
3916	0.5	Extremo 2A	0.138	16.039	0.601	-12.093	0.2164	-168.168
3916	1	Extremo 2A	0.138	31.664	0.601	-12.093	-0.0838	-180.094
3917	0	Extremo 1A	-0.088	-13.411	1.463	-3.0319	0.8867	-163.785
3917	0.5	Extremo 1A	-0.088	2.214	1.463	-3.0319	0.1554	-160.985
3917	1	Extremo 1A	-0.088	17.839	1.463	-3.0319	-0.5759	-165.999
3917	0	Extremo 2A	-0.088	-13.411	1.463	-3.0319	0.8867	-163.785
3917	0.5	Extremo 2A	-0.088	2.214	1.463	-3.0319	0.1554	-160.985
3917	1	Extremo 2A	-0.088	17.839	1.463	-3.0319	-0.5759	-165.999
3918	0	Extremo 1A	-0.53	-17.913	1.88	22.6867	0.842	-167.716
3918	0.5	Extremo 1A	-0.53	-2.288	1.88	22.6867	-0.0978	-162.665
3918	1	Extremo 1A	-0.53	13.337	1.88	22.6867	-1.0376	-165.427
3918	0	Extremo 2A	-0.53	-17.913	1.88	22.6867	0.842	-167.716
3918	0.5	Extremo 2A	-0.53	-2.288	1.88	22.6867	-0.0978	-162.665
3918	1	Extremo 2A	-0.53	13.337	1.88	22.6867	-1.0376	-165.427
3919	0	Extremo 1A	-0.959	-37.121	0.941	33.3839	0.0621	-186.061
3919	0.5	Extremo 1A	-0.959	-21.496	0.941	33.3839	-0.4085	-171.406
3919	1	Extremo 1A	-0.959	-5.871	0.941	33.3839	-0.8791	-164.565
3919	0	Extremo 2A	-0.959	-37.121	0.941	33.3839	0.0621	-186.061
3919	0.5	Extremo 2A	-0.959	-21.496	0.941	33.3839	-0.4085	-171.406
3919	1	Extremo 2A	-0.959	-5.871	0.941	33.3839	-0.8791	-164.565
3920	0	Extremo 1A	-0.944	-66.447	-1.157	25.7966	-1.0284	-175.707
3920	0.5	Extremo 1A	-0.944	-50.822	-1.157	25.7966	-0.4497	-146.39
3920	1	Extremo 1A	-0.944	-35.197	-1.157	25.7966	0.129	-124.885
3920	0	Extremo 2A	-0.944	-66.447	-1.157	25.7966	-1.0284	-175.707
3920	0.5	Extremo 2A	-0.944	-50.822	-1.157	25.7966	-0.4497	-146.39
3920	1	Extremo 2A	-0.944	-35.197	-1.157	25.7966	0.129	-124.885
3921	0	Extremo 1A	0.126	35.955	-0.00773	18.2494	0.1175	-163.284
3921	0.5	Extremo 1A	0.126	51.58	-0.00773	18.2494	0.1214	-185.167
3921	1	Extremo 1A	0.126	67.205	-0.00773	18.2494	0.1252	-214.863
3921	0	Extremo 2A	0.126	35.955	-0.00773	18.2494	0.1175	-163.284
3921	0.5	Extremo 2A	0.126	51.58	-0.00773	18.2494	0.1214	-185.167
3921	1	Extremo 2A	0.126	67.205	-0.00773	18.2494	0.1252	-214.863
3922	0	Extremo 1A	0.091	-54.227	0.517	-41.4157	0.4176	-210.031
3922	0.5	Extremo 1A	0.091	-38.602	0.517	-41.4157	0.1589	-186.824
3922	1	Extremo 1A	0.091	-22.977	0.517	-41.4157	-0.0997	-171.429
3922	0	Extremo 2A	0.091	-54.227	0.517	-41.4157	0.4176	-210.031
3922	0.5	Extremo 2A	0.091	-38.602	0.517	-41.4157	0.1589	-186.824
3922	1	Extremo 2A	0.091	-22.977	0.517	-41.4157	-0.0997	-171.429
3923	0	Extremo 1A	-0.094	-47.314	1.127	-20.7789	0.6615	-135.025
3923	0.5	Extremo 1A	-0.094	-31.689	1.127	-20.7789	0.0979	-115.275
3923	1	Extremo 1A	-0.094	-16.064	1.127	-20.7789	-0.4658	-103.337
3923	0	Extremo 2A	-0.094	-47.314	1.127	-20.7789	0.6615	-135.025
3923	0.5	Extremo 2A	-0.094	-31.689	1.127	-20.7789	0.0979	-115.275
3923	1	Extremo 2A	-0.094	-16.064	1.127	-20.7789	-0.4658	-103.337
3924	0	Extremo 1A	-0.418	23.165	1.33	39.6185	0.5754	-100.03
3924	0.5	Extremo 1A	-0.418	38.79	1.33	39.6185	-0.0894	-115.519
3924	1	Extremo 1A	-0.418	54.415	1.33	39.6185	-0.7541	-138.821
3924	0	Extremo 2A	-0.418	23.165	1.33	39.6184	0.5754	-100.03
3924	0.5	Extremo 2A	-0.418	38.79	1.33	39.6184	-0.0894	-115.519
3924	1	Extremo 2A	-0.418	54.415	1.33	39.6184	-0.7541	-138.821
3925	0	Extremo 1A	-0.707	27.885	0.586	64.7067	0.0012	-169.897
3925	0.5	Extremo 1A	-0.707	43.51	0.586	64.7067	-0.292	-187.746
3925	1	Extremo 1A	-0.707	59.135	0.586	64.7067	-0.5852	-213.407
3925	0	Extremo 2A	-0.707	27.885	0.586	64.7067	0.0012	-169.897

3925	0.5	Extremo 2A	-0.707	43.51	0.586	64.7067	-0.292	-187.746
3925	1	Extremo 2A	-0.707	59.135	0.586	64.7067	-0.5852	-213.407
3926	0	Extremo 1A	-0.69	-73.757	-0.806	17.3239	-0.7234	-215.953
3926	0.5	Extremo 1A	-0.69	-58.132	-0.806	17.3239	-0.3204	-182.981
3926	1	Extremo 1A	-0.69	-42.507	-0.806	17.3239	0.0826	-157.821
3926	0	Extremo 2A	-0.69	-73.757	-0.806	17.3239	-0.7234	-215.953
3926	0.5	Extremo 2A	-0.69	-58.132	-0.806	17.3239	-0.3204	-182.981
3926	1	Extremo 2A	-0.69	-42.507	-0.806	17.3239	0.0826	-157.821
3927	0	Extremo 1A	0.094	211.077	0.027	64.8729	0.1087	-170.925
3927	0.5	Extremo 1A	0.094	226.702	0.027	64.8729	0.0953	-280.369
3927	1	Extremo 1A	0.094	242.327	0.027	64.8729	0.0819	-397.627
3927	0	Extremo 2A	0.094	211.077	0.027	64.8729	0.1087	-170.925
3927	0.5	Extremo 2A	0.094	226.702	0.027	64.8729	0.0953	-280.369
3927	1	Extremo 2A	0.094	242.327	0.027	64.8729	0.0819	-397.627
3928	0	Extremo 1A	0.057	-297.398	0.435	-94.1386	0.3332	-398.844
3928	0.5	Extremo 1A	0.057	-281.773	0.435	-94.1386	0.1159	-254.052
3928	1	Extremo 1A	0.057	-266.148	0.435	-94.1386	-0.1014	-117.072
3928	0	Extremo 2A	0.057	-297.398	0.435	-94.1386	0.3332	-398.844
3928	0.5	Extremo 2A	0.057	-281.773	0.435	-94.1386	0.1159	-254.052
3928	1	Extremo 2A	0.057	-266.148	0.435	-94.1386	-0.1014	-117.072
3929	0	Extremo 1A	-0.091	-143.82	0.861	-42.3127	0.4914	-86.6484
3929	0.5	Extremo 1A	-0.091	-128.195	0.861	-42.3127	0.0607	-18.6449
3929	1	Extremo 1A	-0.091	-112.57	0.861	-42.3127	-0.37	41.5461
3929	0	Extremo 2A	-0.091	-143.819	0.861	-42.3127	0.4914	-86.6484
3929	0.5	Extremo 2A	-0.091	-128.194	0.861	-42.3127	0.0607	-18.6449
3929	1	Extremo 2A	-0.091	-112.569	0.861	-42.3127	-0.37	41.5461
3930	0	Extremo 1A	-0.329	125.179	0.944	48.3037	0.395	51.0194
3930	0.5	Extremo 1A	-0.329	140.804	0.944	48.3037	-0.0767	-15.4762
3930	1	Extremo 1A	-0.329	156.429	0.944	48.3037	-0.5485	-89.7843
3930	0	Extremo 2A	-0.329	125.179	0.944	48.3037	0.395	51.0194
3930	0.5	Extremo 2A	-0.329	140.804	0.944	48.3037	-0.0767	-15.4762
3930	1	Extremo 2A	-0.329	156.429	0.944	48.3037	-0.5485	-89.7844
3931	0	Extremo 1A	-0.526	286.937	0.37	106.143	-0.0264	-100.604
3931	0.5	Extremo 1A	-0.526	302.562	0.37	106.143	-0.2113	-247.979
3931	1	Extremo 1A	-0.526	318.187	0.37	106.143	-0.3962	-403.167
3931	0	Extremo 2A	-0.526	286.937	0.37	106.143	-0.0264	-100.605
3931	0.5	Extremo 2A	-0.526	302.562	0.37	106.143	-0.2113	-247.979
3931	1	Extremo 2A	-0.526	318.187	0.37	106.143	-0.3962	-403.167
3932	0	Extremo 1A	-0.509	-208.385	-0.581	-33.1643	-0.5209	-381.981
3932	0.5	Extremo 1A	-0.509	-192.76	-0.581	-33.1643	-0.2305	-281.695
3932	1	Extremo 1A	-0.509	-177.135	-0.581	-33.1643	0.06	-189.222
3932	0	Extremo 2A	-0.509	-208.385	-0.581	-33.1643	-0.5209	-381.981
3932	0.5	Extremo 2A	-0.509	-192.76	-0.581	-33.1643	-0.2305	-281.695
3932	1	Extremo 2A	-0.509	-177.135	-0.581	-33.1643	0.06	-189.222
3933	0	Extremo 1A	0.068	917.855	0.045	-7.1083	0.0968	41.287
3933	0.5	Extremo 1A	0.068	933.48	0.045	-7.1083	0.074	-421.547
3933	1	Extremo 1A	0.068	949.105	0.045	-7.1083	0.0513	-892.193
3933	0	Extremo 2A	0.068	917.855	0.045	-7.1083	0.0968	41.287
3933	0.5	Extremo 2A	0.068	933.48	0.045	-7.1083	0.074	-421.547
3933	1	Extremo 2A	0.068	949.105	0.045	-7.1083	0.0513	-892.193
3934	0	Extremo 1A	0.033	-1063.19	0.358	-8.3866	0.2633	-897.645
3934	0.5	Extremo 1A	0.033	-1047.56	0.358	-8.3866	0.0841	-369.958
3934	1	Extremo 1A	0.033	-1031.94	0.358	-8.3866	-0.0951	149.916
3934	0	Extremo 2A	0.033	-1063.19	0.358	-8.3866	0.2633	-897.645
3934	0.5	Extremo 2A	0.033	-1047.56	0.358	-8.3866	0.0841	-369.958
3934	1	Extremo 2A	0.033	-1031.94	0.358	-8.3866	-0.0951	149.916
3935	0	Extremo 1A	-0.085	-239.592	0.655	-8.8324	0.3642	-5.6743
3935	0.5	Extremo 1A	-0.085	-223.967	0.655	-8.8324	0.0369	110.216
3935	1	Extremo 1A	-0.085	-208.342	0.655	-8.8324	-0.2904	218.293
3935	0	Extremo 2A	-0.085	-239.592	0.655	-8.8324	0.3642	-5.6743
3935	0.5	Extremo 2A	-0.085	-223.967	0.655	-8.8324	0.0369	110.216
3935	1	Extremo 2A	-0.085	-208.342	0.655	-8.8324	-0.2904	218.293
3936	0	Extremo 1A	-0.259	222.199	0.672	-9.1282	0.2723	230.793
3936	0.5	Extremo 1A	-0.259	237.824	0.672	-9.1282	-0.0637	115.787
3936	1	Extremo 1A	-0.259	253.449	0.672	-9.1282	-0.3996	-7.0307
3936	0	Extremo 2A	-0.259	222.199	0.672	-9.1282	0.2723	230.793
3936	0.5	Extremo 2A	-0.259	237.824	0.672	-9.1282	-0.0637	115.787
3936	1	Extremo 2A	-0.259	253.449	0.672	-9.1282	-0.3996	-7.0308
3937	0	Extremo 1A	-0.394	1060.29	0.234	-9.3867	-0.0373	176.599
3937	0.5	Extremo 1A	-0.394	1075.91	0.234	-9.3867	-0.1543	-357.451
3937	1	Extremo 1A	-0.394	1091.54	0.234	-9.3867	-0.2712	-899.314
3937	0	Extremo 2A	-0.394	1060.29	0.234	-9.3867	-0.0373	176.599
3937	0.5	Extremo 2A	-0.394	1075.91	0.234	-9.3867	-0.1543	-357.451
3937	1	Extremo 2A	-0.394	1091.54	0.234	-9.3867	-0.2712	-899.314
3938	0	Extremo 1A	-0.378	-842.665	-0.429	-9.8421	-0.3816	-857.665
3938	0.5	Extremo 1A	-0.378	-827.04	-0.429	-9.8421	-0.167	-440.239
3938	1	Extremo 1A	-0.378	-811.415	-0.429	-9.8421	0.0476	-30.6251
3938	0	Extremo 2A	-0.378	-842.665	-0.429	-9.8421	-0.3816	-857.665
3938	0.5	Extremo 2A	-0.378	-827.04	-0.429	-9.8421	-0.167	-440.239
3938	1	Extremo 2A	-0.378	-811.415	-0.429	-9.8421	0.0476	-30.6251
3939	0	Extremo 1A	0.048	211.133	0.053	-78.9404	0.0838	-171.433
3939	0.5	Extremo 1A	0.048	226.758	0.053	-78.9404	0.0571	-280.906
3939	1	Extremo 1A	0.048	242.383	0.053	-78.9404	0.0304	-398.192
3939	0	Extremo 2A	0.048	211.133	0.053	-78.9404	0.0838	-171.433
3939	0.5	Extremo 2A	0.048	226.758	0.053	-78.9404	0.0571	-280.906
3939	1	Extremo 2A	0.048	242.383	0.053	-78.9404	0.0304	-398.192
3940	0	Extremo 1A	0.016	-297.496	0.291	77.483	0.2065	-399.725
3940	0.5	Extremo 1A	0.016	-281.871	0.291	77.483	0.0608	-254.883
3940	1	Extremo 1A	0.016	-266.246	0.291	77.483	-0.085	-117.854
3940	0	Extremo 2A	0.016	-297.496	0.291	77.483	0.2065	-399.725
3940	0.5	Extremo 2A	0.016	-281.871	0.291	77.483	0.0608	-254.883
3940	1	Extremo 2A	0.016	-266.246	0.291	77.483	-0.085	-117.854
3941	0	Extremo 1A	-0.076	-144.003	0.496	24.7039	0.2696	-87.6202
3941	0.5	Extremo 1A	-0.076	-128.378	0.496	24.7039	0.0218	-19.525
3941	1	Extremo 1A	-0.076	-112.753	0.496	24.7039	-0.226	40.7577
3941	0	Extremo 2A	-0.076	-144.003	0.496	24.7039	0.2696	-87.6202
3941	0.5	Extremo 2A	-0.076	-128.378	0.496	24.7039	0.0218	-19.525
3941	1	Extremo 2A	-0.076	-112.753	0.496	24.7039	-0.226	40.7576
3942	0	Extremo 1A	-0.204	124.989	0.48	-66.5629	0.1883	50.1765
3942	0.5	Extremo 1A	-0.204	140.614	0.48	-66.5629	-0.0518	-16.2245
3942	1	Extremo 1A	-0.204	156.239	0.48	-66.5629	-0.2919	-90.4379
3942	0	Extremo 2A	-0.204	124.989	0.48	-66.5629	0.1883	50.1765
3942	0.5	Extremo 2A	-0.204	140.614	0.48	-66.5629	-0.0518	-16.2245
3942	1	Extremo 2A	-0.204	156.239	0.48	-66.5629	-0.2919	-90.4379
3943	0	Extremo 1A	-0.297	286.773	0.147	-124.963	-0.0399	-101.199
3943	0.5	Extremo 1A	-0.297	302.398	0.147	-124.963	-0.1135	-248.492
3943	1	Extremo 1A	-0.297	318.023	0.147	-124.963	-0.1871	-403.597
3943	0	Extremo 2A	-0.297	286.773	0.147	-124.963	-0.0399	-101.199
3943	0.5	Extremo 2A	-0.297	302.398	0.147	-124.963	-0.1135	-248.492
3943	1	Extremo 2A	-0.297	318.023	0.147	-124.963	-0.1871	-403.597
3944	0	Extremo 1A	-0.282	-208.517	-0.323	13.4184	-0.2831	-382.28
3944	0.5	Extremo 1A	-0.282	-192.892	-0.323	13.4184	-0.1217	-281.928
3944	1	Extremo 1A	-0.282	-177.267	-0.323	13.4184	0.0397	-189.388
3944	0	Extremo 2A	-0.282	-208.517	-0.323	13.4184	-0.2831	-382.28
3944	0.5	Extremo 2A	-0.282	-192.892	-0.323	13.4184	-0.1217	-281.928
3944	1	Extremo 2A	-0.282	-177.267	-0.323	13.4184	0.0397	-189.388
3945	0	Extremo 1A	0.034	36.078	0.055	-31.8266	0.0711	-164.41
3945	0.5	Extremo 1A	0.034	51.703	0.055	-31.8266	0.0437	-186.355
3945	1	Extremo 1A	0.034	67.328	0.055	-31.8266	0.0164	-216.113
3945	0	Extremo 2A	0.034	36.078	0.055	-31.8266	0.0711	-164.41
3945	0.5	Extremo 2A	0.034	51.703	0.055	-31.8266	0.0437	-186.355
3945	1	Extremo 2A	0.034	67.328	0.055	-31.8266	0.0164	-216.113
3946	0	Extremo 1A	0.00563	-54.473	0.234	25.1557	0.161	-212.009
3946	0.5	Extremo 1A	0.00563	-38.848	0.234	25.1557	0.0438	-188.679
3946	1	Extremo 1A	0.00563	-23.223	0.234	25.1557	-0.0735	-173.161
3946	0	Extremo 2A	0.00563	-54.473	0.234	25.1557	0.161	-212.009
3946	0.5	Extremo 2A	0.00563	-38.848	0.234	25.1557	0.0438	-188.679
3946	1	Extremo 2A	0.00563	-23.223	0.234	25.1557	-0.0735	-173.161
3947	0	Extremo 1A	-0.066	-47.752	0.374	3.3616	0.1995	-137.213
3947	0.5	Extremo 1A	-0.066	-32.127	0.374	3.3616	0.0123	-117.243
3947	1	Extremo 1A	-0.066	-16.502	0.374	3.3616	-0.1749	-105.086
3947	0	Extremo 2A	-0.066	-47.752	0.374	3.3616	0.1995	-137.213
3947	0.5	Extremo 2A	-0.066	-32.127	0.374	3.3616	0.0123	-117.243
3947	1	Extremo 2A	-0.066	-16.502	0.374	3.3616	-0.1749	-105.086
3948	0	Extremo 1A	-0.16	22.74	0.344	-57.886	0.1305	-101.913
3948	0.5	Extremo 1A	-0.16	38.365	0.344	-57.886	-0.0416	-117.19
3948	1	Extremo 1A	-0.16	53.99	0.344	-57.886	-0.2136	-140.279
3948	0	Extremo 2A	-0.16	22.74	0.344	-57.886	0.1305	-101.913
3948	0.5	Extremo 2A	-0.16	38.365	0.344	-57.886	-0.0416	-117.19
3948	1	Extremo 2A	-0.16	53.99	0.344	-57.886	-0.2136	-140.279
3949	0	Extremo 1A	-0.225	27.526	0.091	-83.6809	-0.0383	-171.215
3949	0.5	Extremo 1A	-0.225	43.151	0.091	-83.6809	-0.084	-188.884
3949	1	Extremo 1A	-0.225	58.776	0.091	-83.6809	-0.1296	-214.366
3949	0	Extremo 2A	-0.225	27.526	0.091	-83.6809	-0.0383	-171.215

3949	0.5	Extremo 2A	-0.225	43.151	0.091	-83.6809	-0.084	-188.884
3949	1	Extremo 2A	-0.225	58.776	0.091	-83.6809	-0.1296	-214.366
3950	0	Extremo 1A	-0.211	-74.055	-0.246	-37.2711	-0.212	-216.608
3950	0.5	Extremo 1A	-0.211	-58.43	-0.246	-37.2711	-0.0891	-183.487
3950	1	Extremo 1A	-0.211	-42.805	-0.246	-37.2711	0.0338	-158.178
3950	0	Extremo 2A	-0.211	-74.055	-0.246	-37.2711	-0.212	-216.608
3950	0.5	Extremo 2A	-0.211	-58.43	-0.246	-37.2711	-0.0891	-183.487
3950	1	Extremo 2A	-0.211	-42.805	-0.246	-37.2711	0.0338	-158.178
3951	0	Extremo 1A	0.023	18.84	0.052	-14.1221	0.0594	-136.914
3951	0.5	Extremo 1A	0.023	34.465	0.052	-14.1221	0.0333	-150.241
3951	1	Extremo 1A	0.023	50.09	0.052	-14.1221	0.0073	-171.38
3951	0	Extremo 2A	0.023	18.84	0.052	-14.1221	0.0594	-136.914
3951	0.5	Extremo 2A	0.023	34.465	0.052	-14.1221	0.0333	-150.241
3951	1	Extremo 2A	0.023	50.09	0.052	-14.1221	0.0073	-171.38
3952	0	Extremo 1A	-0.00097	-0.074	0.187	-3.3426	0.125	-167.595
3952	0.5	Extremo 1A	-0.00097	15.551	0.187	-3.3426	0.0315	-171.465
3952	1	Extremo 1A	-0.00097	31.176	0.187	-3.3426	-0.0621	-183.146
3952	0	Extremo 2A	-0.00097	-0.074	0.187	-3.3426	0.125	-167.595
3952	0.5	Extremo 2A	-0.00097	15.551	0.187	-3.3426	0.0315	-171.465
3952	1	Extremo 2A	-0.00097	31.176	0.187	-3.3426	-0.0621	-183.146
3953	0	Extremo 1A	-0.056	-14.27	0.282	-13.9684	0.1476	-167.765
3953	0.5	Extremo 1A	-0.056	1.355	0.282	-13.9684	0.0064	-164.537
3953	1	Extremo 1A	-0.056	16.98	0.282	-13.9684	-0.1349	-169.121
3953	0	Extremo 2A	-0.056	-14.27	0.282	-13.9684	0.1476	-167.765
3953	0.5	Extremo 2A	-0.056	1.355	0.282	-13.9684	0.0064	-164.537
3953	1	Extremo 2A	-0.056	16.98	0.282	-13.9684	-0.1349	-169.121
3954	0	Extremo 1A	-0.126	-18.68	0.247	-40.9759	0.0905	-171.114
3954	0.5	Extremo 1A	-0.126	-3.055	0.247	-40.9759	-0.0331	-165.681
3954	1	Extremo 1A	-0.126	12.57	0.247	-40.9759	-0.1567	-168.06
3954	0	Extremo 2A	-0.126	-18.68	0.247	-40.9759	0.0905	-171.114
3954	0.5	Extremo 2A	-0.126	-3.055	0.247	-40.9759	-0.0331	-165.681
3954	1	Extremo 2A	-0.126	12.57	0.247	-40.9759	-0.1567	-168.06
3955	0	Extremo 1A	-0.171	-37.754	0.055	-52.6847	-0.0347	-188.392
3955	0.5	Extremo 1A	-0.171	-22.129	0.055	-52.6847	-0.0624	-173.421
3955	1	Extremo 1A	-0.171	-6.504	0.055	-52.6847	-0.09	-166.263
3955	0	Extremo 2A	-0.171	-37.754	0.055	-52.6847	-0.0347	-188.392
3955	0.5	Extremo 2A	-0.171	-22.129	0.055	-52.6847	-0.0624	-173.421
3955	1	Extremo 2A	-0.171	-6.504	0.055	-52.6847	-0.09	-166.263
3956	0	Extremo 1A	-0.158	-67.006	-0.189	-46.136	-0.1598	-176.837
3956	0.5	Extremo 1A	-0.158	-51.381	-0.189	-46.136	-0.0654	-147.24
3956	1	Extremo 1A	-0.158	-35.756	-0.189	-46.136	0.0289	-125.455
3956	0	Extremo 2A	-0.158	-67.006	-0.189	-46.1359	-0.1598	-176.837
3956	0.5	Extremo 2A	-0.158	-51.381	-0.189	-46.1359	-0.0654	-147.24
3956	1	Extremo 2A	-0.158	-35.756	-0.189	-46.1359	0.0289	-125.455
3957	0	Extremo 1A	0.015	23.13	0.047	-10.5884	0.049	-125.367
3957	0.5	Extremo 1A	0.015	38.755	0.047	-10.5884	0.0253	-140.839
3957	1	Extremo 1A	0.015	54.38	0.047	-10.5884	0.0016	-164.122
3957	0	Extremo 2A	0.015	23.13	0.047	-10.5884	0.049	-125.367
3957	0.5	Extremo 2A	0.015	38.755	0.047	-10.5884	0.0253	-140.839
3957	1	Extremo 2A	0.015	54.38	0.047	-10.5884	0.0016	-164.122
3958	0	Extremo 1A	-0.00479	8.948	0.148	-12.1561	0.0967	-163.712
3958	0.5	Extremo 1A	-0.00479	24.573	0.148	-12.1561	0.0226	-172.092
3958	1	Extremo 1A	-0.00479	40.198	0.148	-12.1561	-0.0516	-188.284
3958	0	Extremo 2A	-0.00479	8.948	0.148	-12.1561	0.0967	-163.712
3958	0.5	Extremo 2A	-0.00479	24.573	0.148	-12.1561	0.0226	-172.092
3958	1	Extremo 2A	-0.00479	40.198	0.148	-12.1561	-0.0516	-188.284
3959	0	Extremo 1A	-0.048	-9.284	0.213	-18.3768	0.1092	-185.836
3959	0.5	Extremo 1A	-0.048	6.341	0.213	-18.3768	0.0028	-185.1
3959	1	Extremo 1A	-0.048	21.966	0.213	-18.3768	-0.1037	-192.177
3959	0	Extremo 2A	-0.048	-9.284	0.213	-18.3768	0.1092	-185.836
3959	0.5	Extremo 2A	-0.048	6.341	0.213	-18.3768	0.0028	-185.1
3959	1	Extremo 2A	-0.048	21.966	0.213	-18.3768	-0.1037	-192.177
3960	0	Extremo 1A	-0.099	-30.408	0.178	-28.853	0.0628	-197.257
3960	0.5	Extremo 1A	-0.099	-14.783	0.178	-28.853	-0.0262	-185.959
3960	1	Extremo 1A	-0.099	0.842	0.178	-28.853	-0.1152	-182.474
3960	0	Extremo 2A	-0.099	-30.408	0.178	-28.853	0.0628	-197.257
3960	0.5	Extremo 2A	-0.099	-14.783	0.178	-28.853	-0.0262	-185.959
3960	1	Extremo 2A	-0.099	0.842	0.178	-28.853	-0.1152	-182.474
3961	0	Extremo 1A	-0.13	-52.549	0.032	-34.7854	-0.0305	-195.339
3961	0.5	Extremo 1A	-0.13	-36.924	0.032	-34.7854	-0.0465	-172.97
3961	1	Extremo 1A	-0.13	-21.299	0.032	-34.7854	-0.0626	-158.415
3961	0	Extremo 2A	-0.13	-52.549	0.032	-34.7854	-0.0305	-195.339
3961	0.5	Extremo 2A	-0.13	-36.924	0.032	-34.7854	-0.0465	-172.97
3961	1	Extremo 2A	-0.13	-21.299	0.032	-34.7854	-0.0626	-158.415
3962	0	Extremo 1A	-0.119	-72.827	-0.146	-37.9205	-0.121	-169.621
3962	0.5	Extremo 1A	-0.119	-57.202	-0.146	-37.9205	-0.0482	-137.114
3962	1	Extremo 1A	-0.119	-41.577	-0.146	-37.9205	0.0246	-112.419
3962	0	Extremo 2A	-0.119	-72.827	-0.146	-37.9205	-0.121	-169.621
3962	0.5	Extremo 2A	-0.119	-57.202	-0.146	-37.9205	-0.0482	-137.114
3962	1	Extremo 2A	-0.119	-41.577	-0.146	-37.9205	0.0246	-112.419
3963	0	Extremo 1A	0.00986	25.757	0.042	-8.7978	0.04	-123.214
3963	0.5	Extremo 1A	0.00986	41.382	0.042	-8.7978	0.0191	-139.998
3963	1	Extremo 1A	0.00986	57.007	0.042	-8.7978	-0.0017	-164.596
3963	0	Extremo 2A	0.00986	25.757	0.042	-8.7978	0.04	-123.214
3963	0.5	Extremo 2A	0.00986	41.382	0.042	-8.7978	0.0191	-139.998
3963	1	Extremo 2A	0.00986	57.007	0.042	-8.7978	-0.0017	-164.596
3964	0	Extremo 1A	-0.00675	9.128	0.117	-11.956	0.0746	-167.384
3964	0.5	Extremo 1A	-0.00675	24.753	0.117	-11.956	0.0161	-175.854
3964	1	Extremo 1A	-0.00675	40.378	0.117	-11.956	-0.0423	-192.137
3964	0	Extremo 2A	-0.00675	9.128	0.117	-11.956	0.0746	-167.384
3964	0.5	Extremo 2A	-0.00675	24.753	0.117	-11.956	0.0161	-175.854
3964	1	Extremo 2A	-0.00675	40.378	0.117	-11.956	-0.0423	-192.137
3965	0	Extremo 1A	-0.04	-10.744	0.16	-15.5054	0.0809	-195.547
3965	0.5	Extremo 1A	-0.04	4.881	0.16	-15.5054	0.00065	-194.081
3965	1	Extremo 1A	-0.04	20.506	0.16	-15.5054	-0.0796	-200.428
3965	0	Extremo 2A	-0.04	-10.744	0.16	-15.5054	0.0809	-195.547
3965	0.5	Extremo 2A	-0.04	4.881	0.16	-15.5054	0.00065	-194.081
3965	1	Extremo 2A	-0.04	20.506	0.16	-15.5054	-0.0796	-200.428
3966	0	Extremo 1A	-0.077	-33.484	0.128	-19.6227	0.0435	-207.096
3966	0.5	Extremo 1A	-0.077	-17.859	0.128	-19.6227	-0.0206	-194.261
3966	1	Extremo 1A	-0.077	-2.234	0.128	-19.6227	-0.0848	-189.237
3966	0	Extremo 2A	-0.077	-33.484	0.128	-19.6227	0.0435	-207.096
3966	0.5	Extremo 2A	-0.077	-17.859	0.128	-19.6227	-0.0206	-194.261
3966	1	Extremo 2A	-0.077	-2.234	0.128	-19.6227	-0.0848	-189.237
3967	0	Extremo 1A	-0.099	-55.815	0.017	-22.6365	-0.0262	-199.073
3967	0.5	Extremo 1A	-0.099	-40.19	0.017	-22.6365	-0.0348	-175.072
3967	1	Extremo 1A	-0.099	-24.565	0.017	-22.6365	-0.0435	-158.883
3967	0	Extremo 2A	-0.099	-55.815	0.017	-22.6365	-0.0262	-199.073
3967	0.5	Extremo 2A	-0.099	-40.19	0.017	-22.6365	-0.0348	-175.072
3967	1	Extremo 2A	-0.099	-24.565	0.017	-22.6365	-0.0435	-158.883
3968	0	Extremo 1A	-0.09	-75.82	-0.113	-26.3447	-0.092	-169.075
3968	0.5	Extremo 1A	-0.09	-60.195	-0.113	-26.3447	-0.0356	-135.071
3968	1	Extremo 1A	-0.09	-44.57	-0.113	-26.3447	0.0208	-108.88
3968	0	Extremo 2A	-0.09	-75.82	-0.113	-26.3447	-0.092	-169.075
3968	0.5	Extremo 2A	-0.09	-60.195	-0.113	-26.3447	-0.0356	-135.071
3968	1	Extremo 2A	-0.09	-44.57	-0.113	-26.3447	0.0208	-108.88
3969	0	Extremo 1A	0.00607	26.464	0.036	-5.7753	0.0324	-123.759
3969	0.5	Extremo 1A	0.00607	42.089	0.036	-5.7753	0.0144	-140.898
3969	1	Extremo 1A	0.00607	57.714	0.036	-5.7753	-0.0036	-165.849
3969	0	Extremo 2A	0.00607	26.464	0.036	-5.7753	0.0324	-123.759
3969	0.5	Extremo 2A	0.00607	42.089	0.036	-5.7753	0.0144	-140.898
3969	1	Extremo 2A	0.00607	57.714	0.036	-5.7753	-0.0036	-165.849
3970	0	Extremo 1A	-0.00752	8.237	0.092	-7.8826	0.0575	-170.637
3970	0.5	Extremo 1A	-0.00752	23.862	0.092	-7.8826	0.0115	-178.662
3970	1	Extremo 1A	-0.00752	39.487	0.092	-7.8826	-0.0344	-194.499
3970	0	Extremo 2A	-0.00752	8.237	0.092	-7.8826	0.0575	-170.637
3970	0.5	Extremo 2A	-0.00752	23.862	0.092	-7.8826	0.0115	-178.662
3970	1	Extremo 2A	-0.00752	39.487	0.092	-7.8826	-0.0344	-194.499
3971	0	Extremo 1A	-0.033	-12.305	0.121	-9.6238	0.0599	-200.294
3971	0.5	Extremo 1A	-0.033	3.32	0.121	-9.6238	-0.00054	-198.048
3971	1	Extremo 1A	-0.033	18.945	0.121	-9.6238	-0.061	-203.614
3971	0	Extremo 2A	-0.033	-12.305	0.121	-9.6238	0.0599	-200.294
3971	0.5	Extremo 2A	-0.033	3.32	0.121	-9.6238	-0.00054	-198.048
3971	1	Extremo 2A	-0.033	18.945	0.121	-9.6238	-0.061	-203.614
3972	0	Extremo 1A	-0.061	-34.5	0.093	-11.2459	0.03	-211.033
3972	0.5	Extremo 1A	-0.061	-18.875	0.093	-11.2459	-0.0162	-197.69
3972	1	Extremo 1A	-0.061	-3.25	0.093	-11.2459	-0.0625	-192.158
3972	0	Extremo 2A	-0.061	-34.5	0.093	-11.2459	0.03	-211.033
3972	0.5	Extremo 2A	-0.061	-18.875	0.093	-11.2459	-0.0162	-197.69
3972	1	Extremo 2A	-0.061	-3.25	0.093	-11.2459	-0.0625	-192.158
3973	0	Extremo 1A	-0.076	-56.589	0.00803	-12.6073	-0.0221	-201.014
3973	0.5	Extremo 1A	-0.076	-40.964	0.00803	-12.6073	-0.0261	-176.625
3973	1	Extremo 1A	-0.076	-25.339	0.00803	-12.6073	-0.0301	-160.05
3973	0	Extremo 2A	-0.076	-56.589	0.00803	-12.6073	-0.0221	-201.014

3973	0.5	Extremo 2A	-0.076	-40.964	0.00803	-12.6073	-0.0261	-176.625
3973	1	Extremo 2A	-0.076	-25.339	0.00803	-12.6073	-0.0301	-160.05
3974	0	Extremo 1A	-0.068	-76.844	-0.088	-14.76	-0.0701	-169.469
3974	0.5	Extremo 1A	-0.068	-61.219	-0.088	-14.76	-0.0263	-134.953
3974	1	Extremo 1A	-0.068	-45.594	-0.088	-14.76	0.0175	-108.25
3974	0	Extremo 2A	-0.068	-76.844	-0.088	-14.76	-0.0701	-169.469
3974	0.5	Extremo 2A	-0.068	-61.219	-0.088	-14.76	-0.0263	-134.953
3974	1	Extremo 2A	-0.068	-45.594	-0.088	-14.76	0.0175	-108.25
3975	0	Extremo 1A	0.00348	26.566	0.03	-1.7044	0.0261	-124.318
3975	0.5	Extremo 1A	0.00348	42.191	0.03	-1.7044	0.0108	-141.507
3975	1	Extremo 1A	0.00348	57.816	0.03	-1.7044	-0.0044	-166.509
3975	0	Extremo 2A	0.00348	26.566	0.03	-1.7044	0.0261	-124.318
3975	0.5	Extremo 2A	0.00348	42.191	0.03	-1.7044	0.0108	-141.507
3975	1	Extremo 2A	0.00348	57.816	0.03	-1.7044	-0.0044	-166.509
3976	0	Extremo 1A	-0.00754	7.732	0.072	-2.234	0.0442	-172.149
3976	0.5	Extremo 1A	-0.00754	23.357	0.072	-2.234	0.0082	-179.921
3976	1	Extremo 1A	-0.00754	38.982	0.072	-2.234	-0.0278	-195.505
3976	0	Extremo 2A	-0.00754	7.732	0.072	-2.234	0.0442	-172.149
3976	0.5	Extremo 2A	-0.00754	23.357	0.072	-2.234	0.0082	-179.921
3976	1	Extremo 2A	-0.00754	38.982	0.072	-2.234	-0.0278	-195.505
3977	0	Extremo 1A	-0.027	-13.011	0.091	-2.6484	0.0444	-202.115
3977	0.5	Extremo 1A	-0.027	2.614	0.091	-2.6484	-0.0012	-199.515
3977	1	Extremo 1A	-0.027	18.239	0.091	-2.6484	-0.0467	-204.728
3977	0	Extremo 2A	-0.027	-13.011	0.091	-2.6484	0.0444	-202.115
3977	0.5	Extremo 2A	-0.027	2.614	0.091	-2.6484	-0.0012	-199.515
3977	1	Extremo 2A	-0.027	18.239	0.091	-2.6484	-0.0467	-204.728
3978	0	Extremo 1A	-0.047	-34.858	0.067	-3.0072	0.0207	-212.432
3978	0.5	Extremo 1A	-0.047	-19.233	0.067	-3.0072	-0.0127	-198.91
3978	1	Extremo 1A	-0.047	-3.608	0.067	-3.0072	-0.0461	-193.199
3978	0	Extremo 2A	-0.047	-34.858	0.067	-3.0071	0.0207	-212.432
3978	0.5	Extremo 2A	-0.047	-19.233	0.067	-3.0071	-0.0127	-198.91
3978	1	Extremo 2A	-0.047	-3.608	0.067	-3.0071	-0.0461	-193.199
3979	0	Extremo 1A	-0.058	-56.779	0.00238	-3.2826	-0.0184	-201.794
3979	0.5	Extremo 1A	-0.058	-41.154	0.00238	-3.2826	-0.0196	-177.311
3979	1	Extremo 1A	-0.058	-25.529	0.00238	-3.2826	-0.0208	-160.64
3979	0	Extremo 2A	-0.058	-56.779	0.00238	-3.2826	-0.0184	-201.794
3979	0.5	Extremo 2A	-0.058	-41.154	0.00238	-3.2826	-0.0196	-177.311
3979	1	Extremo 2A	-0.058	-25.529	0.00238	-3.2826	-0.0208	-160.64
3980	0	Extremo 1A	-0.051	-77.13	-0.068	-3.4913	-0.0536	-169.729
3980	0.5	Extremo 1A	-0.051	-61.505	-0.068	-3.4913	-0.0195	-135.07
3980	1	Extremo 1A	-0.051	-45.88	-0.068	-3.4913	0.0146	-108.224
3980	0	Extremo 2A	-0.051	-77.13	-0.068	-3.4913	-0.0536	-169.729
3980	0.5	Extremo 2A	-0.051	-61.505	-0.068	-3.4913	-0.0195	-135.07
3980	1	Extremo 2A	-0.051	-45.88	-0.068	-3.4913	0.0146	-108.224
3981	0	Extremo 1A	0.00175	26.576	0.026	2.6538	0.0209	-124.156
3981	0.5	Extremo 1A	0.00175	42.201	0.026	2.6538	0.0081	-141.35
3981	1	Extremo 1A	0.00175	57.826	0.026	2.6538	-0.0046	-166.357
3981	0	Extremo 2A	0.00175	26.576	0.026	2.6538	0.0209	-124.156
3981	0.5	Extremo 2A	0.00175	42.201	0.026	2.6538	0.0081	-141.35
3981	1	Extremo 2A	0.00175	57.826	0.026	2.6538	-0.0046	-166.357
3982	0	Extremo 1A	-0.00713	7.823	0.056	3.7806	0.0339	-171.87
3982	0.5	Extremo 1A	-0.00713	23.448	0.056	3.7806	0.0058	-179.688
3982	1	Extremo 1A	-0.00713	39.073	0.056	3.7806	-0.0223	-195.318
3982	0	Extremo 2A	-0.00713	7.823	0.056	3.7806	0.0339	-171.87
3982	0.5	Extremo 2A	-0.00713	23.448	0.056	3.7806	0.0058	-179.688
3982	1	Extremo 2A	-0.00713	39.073	0.056	3.7806	-0.0223	-195.318
3983	0	Extremo 1A	-0.022	-12.891	0.069	4.566	0.0329	-201.838
3983	0.5	Extremo 1A	-0.022	2.734	0.069	4.566	-0.0014	-199.298
3983	1	Extremo 1A	-0.022	18.359	0.069	4.566	-0.0357	-204.572
3983	0	Extremo 2A	-0.022	-12.891	0.069	4.566	0.0329	-201.838
3983	0.5	Extremo 2A	-0.022	2.734	0.069	4.566	-0.0014	-199.298
3983	1	Extremo 2A	-0.022	18.359	0.069	4.566	-0.0357	-204.572
3984	0	Extremo 1A	-0.037	-34.767	0.048	5.2192	0.0142	-212.237
3984	0.5	Extremo 1A	-0.037	-19.142	0.048	5.2192	-0.0099	-198.759
3984	1	Extremo 1A	-0.037	-3.517	0.048	5.2192	-0.0341	-193.095
3984	0	Extremo 2A	-0.037	-34.767	0.048	5.2192	0.0142	-212.237
3984	0.5	Extremo 2A	-0.037	-19.142	0.048	5.2192	-0.0099	-198.759
3984	1	Extremo 2A	-0.037	-3.517	0.048	5.2192	-0.0341	-193.095
3985	0	Extremo 1A	-0.045	-56.725	-0.00093	5.8861	-0.0152	-201.691
3985	0.5	Extremo 1A	-0.045	-41.1	-0.00093	5.8861	-0.0148	-177.235
3985	1	Extremo 1A	-0.045	-25.475	-0.00093	5.8861	-0.0143	-160.591
3985	0	Extremo 2A	-0.045	-56.725	-0.00093	5.8861	-0.0152	-201.691
3985	0.5	Extremo 2A	-0.045	-41.1	-0.00093	5.8861	-0.0148	-177.235
3985	1	Extremo 2A	-0.045	-25.475	-0.00093	5.8861	-0.0143	-160.591
3986	0	Extremo 1A	-0.039	-77.099	-0.053	7.6677	-0.041	-169.698
3986	0.5	Extremo 1A	-0.039	-61.474	-0.053	7.6677	-0.0145	-135.054
3986	1	Extremo 1A	-0.039	-45.849	-0.053	7.6677	0.012	-108.224
3986	0	Extremo 2A	-0.039	-77.099	-0.053	7.6677	-0.041	-169.698
3986	0.5	Extremo 2A	-0.039	-61.474	-0.053	7.6677	-0.0145	-135.054
3986	1	Extremo 2A	-0.039	-45.849	-0.053	7.6677	0.012	-108.224
3987	0	Extremo 1A	0.00062	26.477	0.021	6.4813	0.0166	-123.267
3987	0.5	Extremo 1A	0.00062	42.102	0.021	6.4813	0.0061	-140.411
3987	1	Extremo 1A	0.00062	57.727	0.021	6.4813	-0.0045	-165.369
3987	0	Extremo 2A	0.00062	26.477	0.021	6.4813	0.0166	-123.267
3987	0.5	Extremo 2A	0.00062	42.102	0.021	6.4813	0.0061	-140.411
3987	1	Extremo 2A	0.00062	57.727	0.021	6.4813	-0.0045	-165.369
3988	0	Extremo 1A	-0.00649	8.536	0.044	9.2004	0.026	-169.733
3988	0.5	Extremo 1A	-0.00649	24.161	0.044	9.2004	0.0041	-177.908
3988	1	Extremo 1A	-0.00649	39.786	0.044	9.2004	-0.0178	-193.894
3988	0	Extremo 2A	-0.00649	8.536	0.044	9.2004	0.026	-169.733
3988	0.5	Extremo 2A	-0.00649	24.161	0.044	9.2004	0.0041	-177.908
3988	1	Extremo 2A	-0.00649	39.786	0.044	9.2004	-0.0178	-193.894
3989	0	Extremo 1A	-0.018	-11.9	0.052	11.405	0.0244	-199.363
3989	0.5	Extremo 1A	-0.018	3.725	0.052	11.405	-0.0015	-197.32
3989	1	Extremo 1A	-0.018	19.35	0.052	11.405	-0.0273	-203.088
3989	0	Extremo 2A	-0.018	-11.9	0.052	11.405	0.0244	-199.363
3989	0.5	Extremo 2A	-0.018	3.725	0.052	11.405	-0.0015	-197.32
3989	1	Extremo 2A	-0.018	19.35	0.052	11.405	-0.0273	-203.088
3990	0	Extremo 1A	-0.029	-34.205	0.035	13.4276	0.0096	-210.372
3990	0.5	Extremo 1A	-0.029	-18.58	0.035	13.4276	-0.0078	-197.176
3990	1	Extremo 1A	-0.029	-2.955	0.035	13.4276	-0.0252	-191.792
3990	0	Extremo 2A	-0.029	-34.205	0.035	13.4276	0.0096	-210.372
3990	0.5	Extremo 2A	-0.029	-18.58	0.035	13.4276	-0.0078	-197.176
3990	1	Extremo 2A	-0.029	-2.955	0.035	13.4276	-0.0252	-191.792
3991	0	Extremo 1A	-0.034	-56.412	-0.00272	15.2427	-0.0125	-200.675
3991	0.5	Extremo 1A	-0.034	-40.787	-0.00272	15.2427	-0.0111	-176.376
3991	1	Extremo 1A	-0.034	-25.162	-0.00272	15.2427	-0.0098	-159.889
3991	0	Extremo 2A	-0.034	-56.412	-0.00272	15.2427	-0.0125	-200.675
3991	0.5	Extremo 2A	-0.034	-40.787	-0.00272	15.2427	-0.0111	-176.376
3991	1	Extremo 2A	-0.034	-25.162	-0.00272	15.2427	-0.0098	-159.889
3992	0	Extremo 1A	-0.029	-76.73	-0.041	18.9684	-0.0314	-169.375
3992	0.5	Extremo 1A	-0.029	-61.105	-0.041	18.9684	-0.0108	-134.916
3992	1	Extremo 1A	-0.029	-45.48	-0.041	18.9684	0.0099	-108.27
3992	0	Extremo 2A	-0.029	-76.73	-0.041	18.9684	-0.0314	-169.375
3992	0.5	Extremo 2A	-0.029	-61.105	-0.041	18.9684	-0.0108	-134.916
3992	1	Extremo 2A	-0.029	-45.48	-0.041	18.9684	0.0099	-108.27
3993	0	Extremo 1A	-8.1E-05	25.676	0.017	8.964	0.0132	-122.453
3993	0.5	Extremo 1A	-8.1E-05	41.301	0.017	8.964	0.0045	-139.198
3993	1	Extremo 1A	-8.1E-05	56.926	0.017	8.964	-0.0042	-163.755
3993	0	Extremo 2A	-8.1E-05	25.676	0.017	8.964	0.0132	-122.453
3993	0.5	Extremo 2A	-8.1E-05	41.301	0.017	8.964	0.0045	-139.198
3993	1	Extremo 2A	-8.1E-05	56.926	0.017	8.964	-0.0042	-163.755
3994	0	Extremo 1A	-0.00576	9.672	0.034	12.6892	0.02	-165.686
3994	0.5	Extremo 1A	-0.00576	25.297	0.034	12.6892	0.0029	-174.428
3994	1	Extremo 1A	-0.00576	40.922	0.034	12.6892	-0.0142	-190.983
3994	0	Extremo 2A	-0.00576	9.672	0.034	12.6892	0.02	-165.686
3994	0.5	Extremo 2A	-0.00576	25.297	0.034	12.6892	0.0029	-174.428
3994	1	Extremo 2A	-0.00576	40.922	0.034	12.6892	-0.0142	-190.983
3995	0	Extremo 1A	-0.014	-9.943	0.039	16.9161	0.0181	-193.613
3995	0.5	Extremo 1A	-0.014	5.682	0.039	16.9161	-0.0014	-192.548
3995	1	Extremo 1A	-0.014	21.307	0.039	16.9161	-0.0209	-199.296
3995	0	Extremo 2A	-0.014	-9.943	0.039	16.9161	0.0181	-193.613
3995	0.5	Extremo 2A	-0.014	5.682	0.039	16.9161	-0.0014	-192.548
3995	1	Extremo 2A	-0.014	21.307	0.039	16.9161	-0.0209	-199.296
3996	0	Extremo 1A	-0.023	-32.89	0.025	21.7671	0.0065	-205.669
3996	0.5	Extremo 1A	-0.023	-17.265	0.025	21.7671	-0.0061	-193.131
3996	1	Extremo 1A	-0.023	-1.64	0.025	21.7671	-0.0186	-188.405
3996	0	Extremo 2A	-0.023	-32.89	0.025	21.7671	0.0065	-205.669
3996	0.5	Extremo 2A	-0.023	-17.265	0.025	21.7671	-0.0061	-193.131
3996	1	Extremo 2A	-0.023	-1.64	0.025	21.7671	-0.0186	-188.405
3997	0	Extremo 1A	-0.026	-55.427	-0.00356	25.3985	-0.0102	-198.397
3997	0.5	Extremo 1A	-0.026	-39.802	-0.00356	25.3985	-0.0084	-174.59
3997	1	Extremo 1A	-0.026	-24.177	-0.00356	25.3985	-0.0066	-158.595
3997	0	Extremo 2A	-0.026	-55.427	-0.00356	25.3985	-0.0102	-198.397

3997	0.5	Extremo 2A	-0.026	-39.802	-0.00356	25.3985	-0.0084	-174.59
3997	1	Extremo 2A	-0.026	-24.177	-0.00356	25.3985	-0.0066	-158.595
3998	0	Extremo 1A	-0.022	-75.518	-0.032	30.6196	-0.0241	-168.941
3998	0.5	Extremo 1A	-0.022	-59.893	-0.032	30.6196	-0.008	-135.089
3998	1	Extremo 1A	-0.022	-44.268	-0.032	30.6196	0.0081	-109.048
3998	0	Extremo 2A	-0.022	-75.518	-0.032	30.6196	-0.0241	-168.941
3998	0.5	Extremo 2A	-0.022	-59.893	-0.032	30.6196	-0.008	-135.089
3998	1	Extremo 2A	-0.022	-44.268	-0.032	30.6196	0.0081	-109.048
3999	0	Extremo 1A	-0.00049	22.655	0.014	9.9132	0.0105	-124.783
3999	0.5	Extremo 1A	-0.00049	38.28	0.014	9.9132	0.0034	-140.017
3999	1	Extremo 1A	-0.00049	53.905	0.014	9.9132	-0.0037	-163.064
3999	0	Extremo 2A	-0.00049	22.655	0.014	9.9132	0.0105	-124.783
3999	0.5	Extremo 2A	-0.00049	38.28	0.014	9.9132	0.0034	-140.017
3999	1	Extremo 2A	-0.00049	53.905	0.014	9.9132	-0.0037	-163.064
4000	0	Extremo 1A	-0.00501	9.58	0.027	11.6019	0.0153	-161.177
4000	0.5	Extremo 1A	-0.00501	25.205	0.027	11.6019	0.002	-169.873
4000	1	Extremo 1A	-0.00501	40.83	0.027	11.6019	-0.0113	-186.382
4000	0	Extremo 2A	-0.00501	9.58	0.027	11.6019	0.0153	-161.177
4000	0.5	Extremo 2A	-0.00501	25.205	0.027	11.6019	0.002	-169.873
4000	1	Extremo 2A	-0.00501	40.83	0.027	11.6019	-0.0113	-186.382
4001	0	Extremo 1A	-0.012	-8.068	0.029	18.8848	0.0134	-182.146
4001	0.5	Extremo 1A	-0.012	7.557	0.029	18.8848	-0.0013	-182.019
4001	1	Extremo 1A	-0.012	23.182	0.029	18.8848	-0.016	-189.704
4001	0	Extremo 2A	-0.012	-8.068	0.029	18.8848	0.0134	-182.146
4001	0.5	Extremo 2A	-0.012	7.557	0.029	18.8848	-0.0013	-182.019
4001	1	Extremo 2A	-0.012	23.182	0.029	18.8848	-0.016	-189.704
4002	0	Extremo 1A	-0.018	-29.144	0.018	31.0609	0.0043	-194.184
4002	0.5	Extremo 1A	-0.018	-13.519	0.018	31.0609	-0.0047	-183.518
4002	1	Extremo 1A	-0.018	2.106	0.018	31.0609	-0.0138	-180.665
4002	0	Extremo 2A	-0.018	-29.144	0.018	31.0609	0.0043	-194.184
4002	0.5	Extremo 2A	-0.018	-13.519	0.018	31.0609	-0.0047	-183.518
4002	1	Extremo 2A	-0.018	2.106	0.018	31.0609	-0.0138	-180.665
4003	0	Extremo 1A	-0.02	-51.533	-0.00382	37.971	-0.0083	-194.119
4003	0.5	Extremo 1A	-0.02	-35.908	-0.00382	37.971	-0.0063	-172.259
4003	1	Extremo 1A	-0.02	-20.283	-0.00382	37.971	-0.0044	-158.211
4003	0	Extremo 2A	-0.02	-51.533	-0.00382	37.9711	-0.0083	-194.119
4003	0.5	Extremo 2A	-0.02	-35.908	-0.00382	37.9711	-0.0063	-172.259
4003	1	Extremo 2A	-0.02	-20.283	-0.00382	37.9711	-0.0044	-158.211
4004	0	Extremo 1A	-0.017	-72.032	-0.025	42.2113	-0.0185	-169.658
4004	0.5	Extremo 1A	-0.017	-56.407	-0.025	42.2113	-0.006	-137.549
4004	1	Extremo 1A	-0.017	-40.782	-0.025	42.2113	0.0066	-113.251
4004	0	Extremo 2A	-0.017	-72.032	-0.025	42.2113	-0.0185	-169.658
4004	0.5	Extremo 2A	-0.017	-56.407	-0.025	42.2113	-0.006	-137.549
4004	1	Extremo 2A	-0.017	-40.782	-0.025	42.2113	0.0066	-113.251
4005	0	Extremo 1A	-0.00071	17.707	0.012	12.7668	0.0083	-137.984
4005	0.5	Extremo 1A	-0.00071	33.332	0.012	12.7668	0.0025	-150.744
4005	1	Extremo 1A	-0.00071	48.957	0.012	12.7668	-0.0033	-171.316
4005	0	Extremo 2A	-0.00071	17.707	0.012	12.7668	0.0083	-137.984
4005	0.5	Extremo 2A	-0.00071	33.332	0.012	12.7668	0.0025	-150.744
4005	1	Extremo 2A	-0.00071	48.957	0.012	12.7668	-0.0033	-171.316
4006	0	Extremo 1A	-0.00429	-0.721	0.021	-0.0312	0.0117	-165.387
4006	0.5	Extremo 1A	-0.00429	14.904	0.021	-0.0312	0.0014	-168.933
4006	1	Extremo 1A	-0.00429	30.529	0.021	-0.0312	-0.0089	-180.291
4006	0	Extremo 2A	-0.00429	-0.721	0.021	-0.0313	0.0117	-165.387
4006	0.5	Extremo 2A	-0.00429	14.904	0.021	-0.0313	0.0014	-168.933
4006	1	Extremo 2A	-0.00429	30.529	0.021	-0.0313	-0.0089	-180.291
4007	0	Extremo 1A	-0.00939	-13.567	0.022	12.3388	0.0099	-160.956
4007	0.5	Extremo 1A	-0.00939	2.058	0.022	12.3388	-0.0011	-158.079
4007	1	Extremo 1A	-0.00939	17.683	0.022	12.3388	-0.0122	-163.014
4007	0	Extremo 2A	-0.00939	-13.567	0.022	12.3388	0.0099	-160.956
4007	0.5	Extremo 2A	-0.00939	2.058	0.022	12.3388	-0.0011	-158.079
4007	1	Extremo 2A	-0.00939	17.683	0.022	12.3388	-0.0122	-163.014
4008	0	Extremo 1A	-0.014	-15.25	0.013	43.6461	0.0028	-163.819
4008	0.5	Extremo 1A	-0.014	0.375	0.013	43.6461	-0.0037	-160.1
4008	1	Extremo 1A	-0.014	16	0.013	43.6461	-0.0102	-164.194
4008	0	Extremo 2A	-0.014	-15.25	0.013	43.6462	0.0028	-163.819
4008	0.5	Extremo 2A	-0.014	0.375	0.013	43.6462	-0.0037	-160.1
4008	1	Extremo 2A	-0.014	16	0.013	43.6462	-0.0102	-164.194
4009	0	Extremo 1A	-0.016	-34.207	-0.00373	57.1377	-0.0067	-186.214
4009	0.5	Extremo 1A	-0.016	-18.582	-0.00373	57.1377	-0.0048	-173.016
4009	1	Extremo 1A	-0.016	-2.957	-0.00373	57.1377	-0.0029	-167.631
4009	0	Extremo 2A	-0.016	-34.207	-0.00373	57.1377	-0.0067	-186.214
4009	0.5	Extremo 2A	-0.016	-18.582	-0.00373	57.1377	-0.0048	-173.016
4009	1	Extremo 2A	-0.016	-2.957	-0.00373	57.1377	-0.0029	-167.631
4010	0	Extremo 1A	-0.013	-65.277	-0.02	49.8037	-0.0143	-178.205
4010	0.5	Extremo 1A	-0.013	-49.652	-0.02	49.8037	-0.0045	-149.473
4010	1	Extremo 1A	-0.013	-34.027	-0.02	49.8037	0.0053	-128.554
4010	0	Extremo 2A	-0.013	-65.277	-0.02	49.8037	-0.0143	-178.205
4010	0.5	Extremo 2A	-0.013	-49.652	-0.02	49.8037	-0.0045	-149.473
4010	1	Extremo 2A	-0.013	-34.027	-0.02	49.8037	0.0053	-128.554
4011	0	Extremo 1A	-0.00081	37.648	0.00936	31.8947	0.0066	-169.66
4011	0.5	Extremo 1A	-0.00081	53.273	0.00936	31.8947	0.0019	-192.391
4011	1	Extremo 1A	-0.00081	68.898	0.00936	31.8947	-0.0028	-222.934
4011	0	Extremo 2A	-0.00081	37.648	0.00936	31.8947	0.0066	-169.66
4011	0.5	Extremo 2A	-0.00081	53.273	0.00936	31.8947	0.0019	-192.391
4011	1	Extremo 2A	-0.00081	68.898	0.00936	31.8947	-0.0028	-222.934
4012	0	Extremo 1A	-0.00364	-63.53	0.016	-34.6052	0.009	-216.476
4012	0.5	Extremo 1A	-0.00364	-47.905	0.016	-34.6052	0.00097	-188.618
4012	1	Extremo 1A	-0.00364	-32.28	0.016	-34.6052	-0.007	-168.571
4012	0	Extremo 2A	-0.00364	-63.53	0.016	-34.6053	0.009	-216.476
4012	0.5	Extremo 2A	-0.00364	-47.905	0.016	-34.6053	0.00097	-188.618
4012	1	Extremo 2A	-0.00364	-32.28	0.016	-34.6053	-0.007	-168.571
4013	0	Extremo 1A	-0.00753	-51.945	0.017	-9.3371	0.0074	-125.22
4013	0.5	Extremo 1A	-0.00753	-36.32	0.017	-9.3371	-0.00098	-103.154
4013	1	Extremo 1A	-0.00753	-20.695	0.017	-9.3371	-0.0093	-88.8998
4013	0	Extremo 2A	-0.00753	-51.945	0.017	-9.3371	0.0074	-125.22
4013	0.5	Extremo 2A	-0.00753	-36.32	0.017	-9.3371	-0.00098	-103.154
4013	1	Extremo 2A	-0.00753	-20.695	0.017	-9.3371	-0.0093	-88.8997
4014	0	Extremo 1A	-0.011	33.29	0.0094	61.6402	0.0018	-83.4943
4014	0.5	Extremo 1A	-0.011	48.915	0.0094	61.6402	-0.0029	-104.046
4014	1	Extremo 1A	-0.011	64.54	0.0094	61.6402	-0.0076	-132.409
4014	0	Extremo 2A	-0.011	33.29	0.0094	61.6402	0.0018	-83.4942
4014	0.5	Extremo 2A	-0.011	48.915	0.0094	61.6402	-0.0029	-104.046
4014	1	Extremo 2A	-0.011	64.54	0.0094	61.6402	-0.0076	-132.409
4015	0	Extremo 1A	-0.012	41.86	-0.00346	91.377	-0.0054	-166.546
4015	0.5	Extremo 1A	-0.012	57.485	-0.00346	91.377	-0.0036	-191.382
4015	1	Extremo 1A	-0.012	73.11	-0.00346	91.377	-0.0019	-224.031
4015	0	Extremo 2A	-0.012	41.86	-0.00346	91.3771	-0.0054	-166.546
4015	0.5	Extremo 2A	-0.012	57.485	-0.00346	91.3771	-0.0036	-191.382
4015	1	Extremo 2A	-0.012	73.11	-0.00346	91.3771	-0.0019	-224.031
4016	0	Extremo 1A	-0.00992	-73.534	-0.015	37.3861	-0.011	-224.713
4016	0.5	Extremo 1A	-0.00992	-57.909	-0.015	37.3861	-0.0033	-191.852
4016	1	Extremo 1A	-0.00992	-42.284	-0.015	37.3861	0.0043	-166.804
4016	0	Extremo 2A	-0.00992	-73.534	-0.015	37.3861	-0.011	-224.713
4016	0.5	Extremo 2A	-0.00992	-57.909	-0.015	37.3861	-0.0033	-191.852
4016	1	Extremo 2A	-0.00992	-42.284	-0.015	37.3861	0.0043	-166.804
4017	0	Extremo 1A	-0.00082	240.159	0.00756	84.9491	0.0052	-177.747
4017	0.5	Extremo 1A	-0.00082	255.784	0.00756	84.9491	0.0014	-301.733
4017	1	Extremo 1A	-0.00082	271.409	0.00756	84.9491	-0.0024	-433.531
4017	0	Extremo 2A	-0.00082	240.159	0.00756	84.9491	0.0052	-177.747
4017	0.5	Extremo 2A	-0.00082	255.784	0.00756	84.9491	0.0014	-301.733
4017	1	Extremo 2A	-0.00082	271.409	0.00756	84.9491	-0.0024	-433.531
4018	0	Extremo 1A	-0.00305	-344.645	0.012	-96.9476	0.0069	-433.479
4018	0.5	Extremo 1A	-0.00305	-329.02	0.012	-96.9476	0.00066	-265.063
4018	1	Extremo 1A	-0.00305	-313.395	0.012	-96.9476	-0.0056	-104.459
4018	0	Extremo 2A	-0.00305	-344.645	0.012	-96.9476	0.0069	-433.479
4018	0.5	Extremo 2A	-0.00305	-329.02	0.012	-96.9476	0.00066	-265.063
4018	1	Extremo 2A	-0.00305	-313.395	0.012	-96.9476	-0.0056	-104.459
4019	0	Extremo 1A	-0.00603	-162.992	0.013	-35.9803	0.0055	-67.4398
4019	0.5	Extremo 1A	-0.00603	-147.367	0.013	-35.9803	-0.00083	10.15
4019	1	Extremo 1A	-0.00603	-131.742	0.013	-35.9803	-0.0071	79.9274
4019	0	Extremo 2A	-0.00603	-162.992	0.013	-35.9803	0.0055	-67.4397
4019	0.5	Extremo 2A	-0.00603	-147.367	0.013	-35.9803	-0.00083	10.1501
4019	1	Extremo 2A	-0.00603	-131.742	0.013	-35.9803	-0.0071	79.9275
4020	0	Extremo 1A	-0.00853	152.585	0.00676	69.7387	0.0011	93.0415
4020	0.5	Extremo 1A	-0.00853	168.21	0.00676	69.7387	-0.0022	12.8429
4020	1	Extremo 1A	-0.00853	183.835	0.00676	69.7387	-0.0056	-75.1682
4020	0	Extremo 2A	-0.00853	152.585	0.00676	69.7387	0.0011	93.0417
4020	0.5	Extremo 2A	-0.00853	168.21	0.00676	69.7387	-0.0022	12.843
4020	1	Extremo 2A	-0.00853	183.835	0.00676	69.7387	-0.0056	-75.1682
4021	0	Extremo 1A	-0.00926	343.597	-0.0031	137.351	-0.0043	-85.5111
4021	0.5	Extremo 1A	-0.00926	359.222	-0.0031	137.351	-0.0028	-261.216
4021	1	Extremo 1A	-0.00926	374.847	-0.0031	137.351	-0.0012	-444.733
4021	0	Extremo 2A	-0.00926	343.597	-0.0031	137.351	-0.0043	-85.5111

4021	0.5	Extremo 2A	-0.00926	359.222	-0.0031	137.351	-0.0028	-261.216
4021	1	Extremo 2A	-0.00926	374.847	-0.0031	137.351	-0.0012	-444.733
4022	0	Extremo 1A	-0.00758	-230.117	-0.012	-23.8644	-0.0085	-417.786
4022	0.5	Extremo 1A	-0.00758	-214.492	-0.012	-23.8644	-0.0025	-306.633
4022	1	Extremo 1A	-0.00758	-198.867	-0.012	-23.8644	0.0035	-203.293
4022	0	Extremo 2A	-0.00758	-230.117	-0.012	-23.8645	-0.0085	-417.786
4022	0.5	Extremo 2A	-0.00758	-214.492	-0.012	-23.8645	-0.0025	-306.633
4022	1	Extremo 2A	-0.00758	-198.867	-0.012	-23.8645	0.0035	-203.293
4023	0	Extremo 1A	-0.00078	1057.8	0.00608	0.3858	0.0041	68.2034
4023	0.5	Extremo 1A	-0.00078	1073.42	0.00608	0.3858	0.001	-464.602
4023	1	Extremo 1A	-0.00078	1089.05	0.00608	0.3858	-0.002	-1005.22
4023	0	Extremo 2A	-0.00078	1057.8	0.00608	0.3858	0.0041	68.2035
4023	0.5	Extremo 2A	-0.00078	1073.42	0.00608	0.3858	0.001	-464.602
4023	1	Extremo 2A	-0.00078	1089.05	0.00608	0.3858	-0.002	-1005.22
4024	0	Extremo 1A	-0.00254	-1230.56	0.00965	0.4756	0.0053	-1009.75
4024	0.5	Extremo 1A	-0.00254	-1214.94	0.00965	0.4756	0.00045	-398.38
4024	1	Extremo 1A	-0.00254	-1199.31	0.00965	0.4756	-0.0044	205.181
4024	0	Extremo 2A	-0.00254	-1230.56	0.00965	0.4756	0.0053	-1009.75
4024	0.5	Extremo 2A	-0.00254	-1214.94	0.00965	0.4756	0.00045	-398.38
4024	1	Extremo 2A	-0.00254	-1199.31	0.00965	0.4756	-0.0044	205.182
4025	0	Extremo 1A	-0.00482	-273.616	0.00953	0.4935	0.0041	27.3291
4025	0.5	Extremo 1A	-0.00482	-257.991	0.00953	0.4935	-0.0007	160.231
4025	1	Extremo 1A	-0.00482	-242.366	0.00953	0.4935	-0.0055	285.32
4025	0	Extremo 2A	-0.00482	-273.616	0.00953	0.4934	0.0041	27.3292
4025	0.5	Extremo 2A	-0.00482	-257.991	0.00953	0.4934	-0.0007	160.231
4025	1	Extremo 2A	-0.00482	-242.366	0.00953	0.4934	-0.0055	285.32
4026	0	Extremo 1A	-0.00667	265.681	0.00485	0.5051	0.00068	302.566
4026	0.5	Extremo 1A	-0.00667	281.306	0.00485	0.5051	-0.0017	165.819
4026	1	Extremo 1A	-0.00667	296.931	0.00485	0.5051	-0.0042	21.2598
4026	0	Extremo 2A	-0.00667	265.681	0.00485	0.5051	0.00068	302.566
4026	0.5	Extremo 2A	-0.00667	281.306	0.00485	0.5051	-0.0017	165.819
4026	1	Extremo 2A	-0.00667	296.931	0.00485	0.5051	-0.0042	21.2599
4027	0	Extremo 1A	-0.00714	1243.77	-0.00271	0.55	-0.0034	237.37
4027	0.5	Extremo 1A	-0.00714	1259.39	-0.00271	0.55	-0.0021	-388.42
4027	1	Extremo 1A	-0.00714	1275.02	-0.00271	0.55	-0.00073	-1022.02
4027	0	Extremo 2A	-0.00714	1243.77	-0.00271	0.55	-0.0034	237.371
4027	0.5	Extremo 2A	-0.00714	1259.39	-0.00271	0.55	-0.0021	-388.42
4027	1	Extremo 2A	-0.00714	1275.02	-0.00271	0.55	-0.00073	-1022.02
4028	0	Extremo 1A	-0.0058	-968.268	-0.00929	0.8208	-0.0065	-971.28
4028	0.5	Extremo 1A	-0.0058	-952.643	-0.00929	0.8208	-0.0019	-491.052
4028	1	Extremo 1A	-0.0058	-937.018	-0.00929	0.8208	0.0028	-18.6362
4028	0	Extremo 2A	-0.0058	-968.269	-0.00929	0.8208	-0.0065	-971.28
4028	0.5	Extremo 2A	-0.0058	-952.644	-0.00929	0.8208	-0.0019	-491.052
4028	1	Extremo 2A	-0.0058	-937.019	-0.00929	0.8208	0.0028	-18.6361
4029	0	Extremo 1A	-0.00072	240.158	0.00488	-84.1789	0.0032	-177.741
4029	0.5	Extremo 1A	-0.00072	255.783	0.00488	-84.1789	0.00076	-301.726
4029	1	Extremo 1A	-0.00072	271.408	0.00488	-84.1789	-0.0017	-433.524
4029	0	Extremo 2A	-0.00072	240.158	0.00488	-84.179	0.0032	-177.741
4029	0.5	Extremo 2A	-0.00072	255.783	0.00488	-84.179	0.00076	-301.727
4029	1	Extremo 2A	-0.00072	271.408	0.00488	-84.179	-0.0017	-433.524
4030	0	Extremo 1A	-0.0021	-344.644	0.00749	97.8976	0.004	-433.469
4030	0.5	Extremo 1A	-0.0021	-329.019	0.00749	97.8976	0.0003	-265.053
4030	1	Extremo 1A	-0.0021	-313.394	0.00749	97.8976	-0.0034	-104.45
4030	0	Extremo 2A	-0.0021	-344.644	0.00749	97.8977	0.004	-433.469
4030	0.5	Extremo 2A	-0.0021	-329.019	0.00749	97.8977	0.0003	-265.053
4030	1	Extremo 2A	-0.0021	-313.394	0.00749	97.8977	-0.0034	-104.45
4031	0	Extremo 1A	-0.00384	-162.99	0.0072	36.9667	0.003	-67.4293
4031	0.5	Extremo 1A	-0.00384	-147.365	0.0072	36.9667	-0.00058	10.1594
4031	1	Extremo 1A	-0.00384	-131.74	0.0072	36.9667	-0.0042	79.9357
4031	0	Extremo 2A	-0.00384	-162.99	0.0072	36.9667	0.003	-67.4293
4031	0.5	Extremo 2A	-0.00384	-147.365	0.0072	36.9667	-0.00058	10.1595
4031	1	Extremo 2A	-0.00384	-131.74	0.0072	36.9667	-0.0042	79.9359
4032	0	Extremo 1A	-0.00522	152.587	0.00347	-68.7284	0.00038	93.0503
4032	0.5	Extremo 1A	-0.00522	168.212	0.00347	-68.7284	-0.0014	12.8504
4032	1	Extremo 1A	-0.00522	183.837	0.00347	-68.7284	-0.0031	-75.162
4032	0	Extremo 2A	-0.00522	152.587	0.00347	-68.7284	0.00038	93.0504
4032	0.5	Extremo 2A	-0.00522	168.212	0.00347	-68.7284	-0.0014	12.8505
4032	1	Extremo 2A	-0.00522	183.837	0.00347	-68.7284	-0.0031	-75.1619
4033	0	Extremo 1A	-0.00552	343.599	-0.00233	-136.251	-0.0028	-85.5054
4033	0.5	Extremo 1A	-0.00552	359.224	-0.00233	-136.251	-0.0016	-261.211
4033	1	Extremo 1A	-0.00552	374.849	-0.00233	-136.251	-0.00042	-444.73
4033	0	Extremo 2A	-0.00552	343.6	-0.00233	-136.251	-0.0028	-85.5053
4033	0.5	Extremo 2A	-0.00552	359.225	-0.00233	-136.251	-0.0016	-261.211
4033	1	Extremo 2A	-0.00552	374.85	-0.00233	-136.251	-0.00042	-444.73
4034	0	Extremo 1A	-0.00444	-230.116	-0.00725	25.5064	-0.005	-417.783
4034	0.5	Extremo 1A	-0.00444	-214.491	-0.00725	25.5064	-0.0014	-306.632
4034	1	Extremo 1A	-0.00444	-198.866	-0.00725	25.5064	0.0022	-203.292
4034	0	Extremo 2A	-0.00444	-230.116	-0.00725	25.5064	-0.005	-417.783
4034	0.5	Extremo 2A	-0.00444	-214.491	-0.00725	25.5064	-0.0014	-306.632
4034	1	Extremo 2A	-0.00444	-198.866	-0.00725	25.5064	0.0022	-203.292
4035	0	Extremo 1A	-0.00064	37.647	0.00391	-31.1297	0.0025	-169.647
4035	0.5	Extremo 1A	-0.00064	53.272	0.00391	-31.1297	0.00056	-192.377
4035	1	Extremo 1A	-0.00064	68.897	0.00391	-31.1297	-0.0014	-222.919
4035	0	Extremo 2A	-0.00064	37.647	0.00391	-31.1297	0.0025	-169.647
4035	0.5	Extremo 2A	-0.00064	53.272	0.00391	-31.1297	0.00056	-192.377
4035	1	Extremo 2A	-0.00064	68.897	0.00391	-31.1297	-0.0014	-222.919
4036	0	Extremo 1A	-0.00173	-63.527	0.00581	35.5515	0.0031	-216.454
4036	0.5	Extremo 1A	-0.00173	-47.902	0.00581	35.5515	0.00019	-188.597
4036	1	Extremo 1A	-0.00173	-32.277	0.00581	35.5515	-0.0027	-168.552
4036	0	Extremo 2A	-0.00173	-63.528	0.00581	35.5515	0.0031	-216.455
4036	0.5	Extremo 2A	-0.00173	-47.903	0.00581	35.5515	0.00019	-188.597
4036	1	Extremo 2A	-0.00173	-32.278	0.00581	35.5515	-0.0027	-168.552
4037	0	Extremo 1A	-0.00306	-51.94	0.00544	10.322	0.0022	-125.197
4037	0.5	Extremo 1A	-0.00306	-36.315	0.00544	10.322	-0.00048	-103.133
4037	1	Extremo 1A	-0.00306	-20.69	0.00544	10.322	-0.0032	-88.8814
4037	0	Extremo 2A	-0.00306	-51.94	0.00544	10.322	0.0022	-125.197
4037	0.5	Extremo 2A	-0.00306	-36.315	0.00544	10.322	-0.00048	-103.133
4037	1	Extremo 2A	-0.00306	-20.69	0.00544	10.322	-0.0032	-88.8814
4038	0	Extremo 1A	-0.00408	33.296	0.00248	-60.6297	0.00019	-83.475
4038	0.5	Extremo 1A	-0.00408	48.921	0.00248	-60.6297	-0.0011	-104.029
4038	1	Extremo 1A	-0.00408	64.546	0.00248	-60.6297	-0.0023	-132.396
4038	0	Extremo 2A	-0.00408	33.296	0.00248	-60.6297	0.00019	-83.4749
4038	0.5	Extremo 2A	-0.00408	48.921	0.00248	-60.6297	-0.0011	-104.029
4038	1	Extremo 2A	-0.00408	64.546	0.00248	-60.6297	-0.0023	-132.396
4039	0	Extremo 1A	-0.00427	41.865	-0.00198	-90.2754	-0.0022	-166.533
4039	0.5	Extremo 1A	-0.00427	57.49	-0.00198	-90.2754	-0.0012	-191.372
4039	1	Extremo 1A	-0.00427	73.115	-0.00198	-90.2754	-0.00022	-224.024
4039	0	Extremo 2A	-0.00427	41.865	-0.00198	-90.2755	-0.0022	-166.533
4039	0.5	Extremo 2A	-0.00427	57.49	-0.00198	-90.2755	-0.0012	-191.372
4039	1	Extremo 2A	-0.00427	73.115	-0.00198	-90.2755	-0.00022	-224.024
4040	0	Extremo 1A	-0.0034	-73.531	-0.00566	-35.7428	-0.0039	-224.708
4040	0.5	Extremo 1A	-0.0034	-57.906	-0.00566	-35.7428	-0.0011	-191.849
4040	1	Extremo 1A	-0.0034	-42.281	-0.00566	-35.7428	0.0018	-166.802
4040	0	Extremo 2A	-0.0034	-73.531	-0.00566	-35.7428	-0.0039	-224.708
4040	0.5	Extremo 2A	-0.0034	-57.906	-0.00566	-35.7428	-0.0011	-191.849
4040	1	Extremo 2A	-0.0034	-42.281	-0.00566	-35.7428	0.0018	-166.802
4041	0	Extremo 1A	-0.00056	17.705	0.00312	-12.012	0.002	-137.96
4041	0.5	Extremo 1A	-0.00056	33.33	0.00312	-12.012	0.00042	-150.718
4041	1	Extremo 1A	-0.00056	48.955	0.00312	-12.012	-0.0011	-171.29
4041	0	Extremo 2A	-0.00056	17.705	0.00312	-12.012	0.002	-137.96
4041	0.5	Extremo 2A	-0.00056	33.33	0.00312	-12.012	0.00042	-150.718
4041	1	Extremo 2A	-0.00056	48.955	0.00312	-12.012	-0.0011	-171.29
4042	0	Extremo 1A	-0.00142	-0.716	0.00451	0.9701	0.0024	-165.347
4042	0.5	Extremo 1A	-0.00142	14.909	0.00451	0.9701	0.00012	-168.896
4042	1	Extremo 1A	-0.00142	30.534	0.00451	0.9701	-0.0021	-180.256
4042	0	Extremo 2A	-0.00142	-0.716	0.00451	0.9701	0.0024	-165.347
4042	0.5	Extremo 2A	-0.00142	14.909	0.00451	0.9701	0.00012	-168.896
4042	1	Extremo 2A	-0.00142	30.534	0.00451	0.9701	-0.0021	-180.256
4043	0	Extremo 1A	-0.00244	-13.557	0.00412	-11.3571	0.0017	-160.914
4043	0.5	Extremo 1A	-0.00244	2.068	0.00412	-11.3571	-0.00039	-158.042
4043	1	Extremo 1A	-0.00244	17.693	0.00412	-11.3571	-0.0025	-162.982
4043	0	Extremo 2A	-0.00244	-13.557	0.00412	-11.3571	0.0017	-160.914
4043	0.5	Extremo 2A	-0.00244	2.068	0.00412	-11.3571	-0.00039	-158.042
4043	1	Extremo 2A	-0.00244	17.693	0.00412	-11.3571	-0.0025	-162.982
4044	0	Extremo 1A	-0.0032	-15.239	0.00176	-42.6355	6.2E-05	-163.785
4044	0.5	Extremo 1A	-0.0032	0.386	0.00176	-42.6355	-0.00082	-160.072
4044	1	Extremo 1A	-0.0032	16.011	0.00176	-42.6355	-0.0017	-164.171
4044	0	Extremo 2A	-0.0032	-15.239	0.00176	-42.6355	6.2E-05	-163.785
4044	0.5	Extremo 2A	-0.0032	0.386	0.00176	-42.6355	-0.00082	-160.072
4044	1	Extremo 2A	-0.0032	16.011	0.00176	-42.6355	-0.0017	-164.171
4045	0	Extremo 1A	-0.0033	-34.198	-0.00166	-56.0342	-0.0017	-186.192
4045	0.5	Extremo 1A	-0.0033	-18.573	-0.00166	-56.0342	-0.00092	-173
4045	1	Extremo 1A	-0.0033	-2.948	-0.00166	-56.0342	-9E-05	-167.62
4045	0	Extremo 2A	-0.0033	-34.198	-0.00166	-56.0342	-0.0017	-186.192

4045	0.5	Extremo 2A	-0.0033	-18.573	-0.00166	-56.0342	-0.00092	-173
4045	1	Extremo 2A	-0.0033	-2.948	-0.00166	-56.0342	-9E-05	-167.62
4046	0	Extremo 1A	-0.00261	-65.271	-0.00442	-48.1582	-0.003	-178.196
4046	0.5	Extremo 1A	-0.00261	-49.646	-0.00442	-48.1582	-0.00079	-149.467
4046	1	Extremo 1A	-0.00261	-34.021	-0.00442	-48.1582	0.0014	-128.551
4046	0	Extremo 2A	-0.00261	-65.271	-0.00442	-48.1582	-0.003	-178.196
4046	0.5	Extremo 2A	-0.00261	-49.646	-0.00442	-48.1582	-0.00079	-149.467
4046	1	Extremo 2A	-0.00261	-34.021	-0.00442	-48.1582	0.0014	-128.551
4047	0	Extremo 1A	-0.00048	22.653	0.00249	-9.1765	0.0016	-124.741
4047	0.5	Extremo 1A	-0.00048	38.278	0.00249	-9.1765	0.00031	-139.974
4047	1	Extremo 1A	-0.00048	53.903	0.00249	-9.1765	-0.00094	-163.019
4047	0	Extremo 2A	-0.00048	22.653	0.00249	-9.1765	0.0016	-124.741
4047	0.5	Extremo 2A	-0.00048	38.278	0.00249	-9.1765	0.00031	-139.974
4047	1	Extremo 2A	-0.00048	53.903	0.00249	-9.1765	-0.00094	-163.019
4048	0	Extremo 1A	-0.00116	9.591	0.0035	-10.6765	0.0018	-161.108
4048	0.5	Extremo 1A	-0.00116	25.216	0.0035	-10.6765	7.3E-05	-169.81
4048	1	Extremo 1A	-0.00116	40.841	0.0035	-10.6765	-0.0017	-186.324
4048	0	Extremo 2A	-0.00116	9.591	0.0035	-10.6765	0.0018	-161.108
4048	0.5	Extremo 2A	-0.00116	25.216	0.0035	-10.6765	7.3E-05	-169.81
4048	1	Extremo 2A	-0.00116	40.841	0.0035	-10.6765	-0.0017	-186.324
4049	0	Extremo 1A	-0.00194	-8.048	0.00312	-17.9091	0.0012	-182.075
4049	0.5	Extremo 1A	-0.00194	7.577	0.00312	-17.9091	-0.00032	-181.957
4049	1	Extremo 1A	-0.00194	23.202	0.00312	-17.9091	-0.0019	-189.652
4049	0	Extremo 2A	-0.00194	-8.048	0.00312	-17.9091	0.0012	-182.075
4049	0.5	Extremo 2A	-0.00194	7.577	0.00312	-17.9091	-0.00032	-181.957
4049	1	Extremo 2A	-0.00194	23.202	0.00312	-17.9091	-0.0019	-189.652
4050	0	Extremo 1A	-0.0025	-29.123	0.00125	-30.0506	-1.2E-05	-194.128
4050	0.5	Extremo 1A	-0.0025	-13.498	0.00125	-30.0506	-0.00064	-183.473
4050	1	Extremo 1A	-0.0025	2.127	0.00125	-30.0506	-0.0013	-180.63
4050	0	Extremo 2A	-0.0025	-29.123	0.00125	-30.0506	-1.2E-05	-194.128
4050	0.5	Extremo 2A	-0.0025	-13.498	0.00125	-30.0506	-0.00064	-183.473
4050	1	Extremo 2A	-0.0025	2.127	0.00125	-30.0506	-0.0013	-180.63
4051	0	Extremo 1A	-0.00255	-51.516	-0.00138	-36.8651	-0.0014	-194.085
4051	0.5	Extremo 1A	-0.00255	-35.891	-0.00138	-36.8651	-0.0007	-172.234
4051	1	Extremo 1A	-0.00255	-20.266	-0.00138	-36.8651	-1.1E-05	-158.195
4051	0	Extremo 2A	-0.00255	-51.516	-0.00138	-36.8651	-0.0014	-194.085
4051	0.5	Extremo 2A	-0.00255	-35.891	-0.00138	-36.8651	-0.0007	-172.234
4051	1	Extremo 2A	-0.00255	-20.266	-0.00138	-36.8651	-1.1E-05	-158.195
4052	0	Extremo 1A	-0.00201	-72.022	-0.00345	-40.5629	-0.0023	-169.645
4052	0.5	Extremo 1A	-0.00201	-56.397	-0.00345	-40.5629	-0.0006	-137.54
4052	1	Extremo 1A	-0.00201	-40.772	-0.00345	-40.5629	0.0011	-113.248
4052	0	Extremo 2A	-0.00201	-72.022	-0.00345	-40.5629	-0.0023	-169.645
4052	0.5	Extremo 2A	-0.00201	-56.397	-0.00345	-40.5629	-0.0006	-137.54
4052	1	Extremo 2A	-0.00201	-40.772	-0.00345	-40.5629	0.0011	-113.248
4053	0	Extremo 1A	-0.00041	25.674	0.00198	-8.2591	0.0012	-122.381
4053	0.5	Extremo 1A	-0.00041	41.299	0.00198	-8.2591	0.00023	-139.124
4053	1	Extremo 1A	-0.00041	56.924	0.00198	-8.2591	-0.00077	-163.68
4053	0	Extremo 2A	-0.00041	25.674	0.00198	-8.2591	0.0012	-122.381
4053	0.5	Extremo 2A	-0.00041	41.299	0.00198	-8.2591	0.00023	-139.124
4053	1	Extremo 2A	-0.00041	56.924	0.00198	-8.2591	-0.00077	-163.68
4054	0	Extremo 1A	-0.00094	9.695	0.00271	-11.7874	0.0014	-165.569
4054	0.5	Extremo 1A	-0.00094	25.32	0.00271	-11.7874	4.1E-05	-174.323
4054	1	Extremo 1A	-0.00094	40.945	0.00271	-11.7874	-0.0013	-190.889
4054	0	Extremo 2A	-0.00094	9.695	0.00271	-11.7874	0.0014	-165.569
4054	0.5	Extremo 2A	-0.00094	25.32	0.00271	-11.7874	4.1E-05	-174.323
4054	1	Extremo 2A	-0.00094	40.945	0.00271	-11.7874	-0.0013	-190.889
4055	0	Extremo 1A	-0.00154	-9.906	0.00236	-15.9516	0.00092	-193.495
4055	0.5	Extremo 1A	-0.00154	5.719	0.00236	-15.9516	-0.00026	-192.449
4055	1	Extremo 1A	-0.00154	21.344	0.00236	-15.9516	-0.0014	-199.215
4055	0	Extremo 2A	-0.00154	-9.906	0.00236	-15.9516	0.00092	-193.495
4055	0.5	Extremo 2A	-0.00154	5.719	0.00236	-15.9516	-0.00026	-192.449
4055	1	Extremo 2A	-0.00154	21.344	0.00236	-15.9516	-0.0014	-199.215
4056	0	Extremo 1A	-0.00196	-32.852	0.00088	-20.7587	-5.4E-05	-205.579
4056	0.5	Extremo 1A	-0.00196	-17.227	0.00088	-20.7587	-0.0005	-193.06
4056	1	Extremo 1A	-0.00196	-1.602	0.00088	-20.7587	-0.00094	-188.353
4056	0	Extremo 2A	-0.00196	-32.852	0.00088	-20.7587	-5.4E-05	-205.579
4056	0.5	Extremo 2A	-0.00196	-17.227	0.00088	-20.7587	-0.0005	-193.06
4056	1	Extremo 2A	-0.00196	-1.602	0.00088	-20.7587	-0.00094	-188.353
4057	0	Extremo 1A	-0.00198	-55.397	-0.00114	-24.2899	-0.0011	-198.345
4057	0.5	Extremo 1A	-0.00198	-39.772	-0.00114	-24.2899	-0.00053	-174.553
4057	1	Extremo 1A	-0.00198	-24.147	-0.00114	-24.2899	3.6E-05	-158.573
4057	0	Extremo 2A	-0.00198	-55.397	-0.00114	-24.2899	-0.0011	-198.345
4057	0.5	Extremo 2A	-0.00198	-39.772	-0.00114	-24.2899	-0.00053	-174.553
4057	1	Extremo 2A	-0.00198	-24.147	-0.00114	-24.2899	3.6E-05	-158.573
4058	0	Extremo 1A	-0.00154	-75.503	-0.00269	-28.9676	-0.0018	-168.923
4058	0.5	Extremo 1A	-0.00154	-59.878	-0.00269	-28.9676	-0.00045	-135.077
4058	1	Extremo 1A	-0.00154	-44.253	-0.00269	-28.9676	0.0009	-109.045
4058	0	Extremo 2A	-0.00154	-75.503	-0.00269	-28.9676	-0.0018	-168.923
4058	0.5	Extremo 2A	-0.00154	-59.878	-0.00269	-28.9676	-0.00045	-135.077
4058	1	Extremo 2A	-0.00154	-44.253	-0.00269	-28.9676	0.0009	-109.045
4059	0	Extremo 1A	-0.00035	26.476	0.00158	-5.8316	0.00096	-123.143
4059	0.5	Extremo 1A	-0.00035	42.101	0.00158	-5.8316	0.00017	-140.287
4059	1	Extremo 1A	-0.00035	57.726	0.00158	-5.8316	-0.00062	-165.244
4059	0	Extremo 2A	-0.00035	26.476	0.00158	-5.8316	0.00096	-123.143
4059	0.5	Extremo 2A	-0.00035	42.101	0.00158	-5.8316	0.00017	-140.287
4059	1	Extremo 2A	-0.00035	57.726	0.00158	-5.8316	-0.00062	-165.244
4060	0	Extremo 1A	-0.00076	8.581	0.00211	-8.3403	0.0011	-169.536
4060	0.5	Extremo 1A	-0.00076	24.206	0.00211	-8.3403	2E-05	-177.732
4060	1	Extremo 1A	-0.00076	39.831	0.00211	-8.3403	-0.001	-193.742
4060	0	Extremo 2A	-0.00076	8.581	0.00211	-8.3403	0.0011	-169.536
4060	0.5	Extremo 2A	-0.00076	24.206	0.00211	-8.3403	2E-05	-177.732
4060	1	Extremo 2A	-0.00076	39.831	0.00211	-8.3403	-0.001	-193.742
4061	0	Extremo 1A	-0.00122	-11.831	0.00179	-10.4614	0.00068	-199.167
4061	0.5	Extremo 1A	-0.00122	3.794	0.00179	-10.4614	-0.00021	-197.158
4061	1	Extremo 1A	-0.00122	19.419	0.00179	-10.4614	-0.0011	-202.961
4061	0	Extremo 2A	-0.00122	-11.831	0.00179	-10.4614	0.00068	-199.167
4061	0.5	Extremo 2A	-0.00122	3.794	0.00179	-10.4614	-0.00021	-197.158
4061	1	Extremo 2A	-0.00122	19.419	0.00179	-10.4614	-0.0011	-202.961
4062	0	Extremo 1A	-0.00153	-34.137	0.00062	-12.4247	-7.6E-05	-210.227
4062	0.5	Extremo 1A	-0.00153	-18.512	0.00062	-12.4247	-0.00039	-197.065
4062	1	Extremo 1A	-0.00153	-2.887	0.00062	-12.4247	-0.0007	-191.715
4062	0	Extremo 2A	-0.00153	-34.137	0.00062	-12.4247	-7.6E-05	-210.227
4062	0.5	Extremo 2A	-0.00153	-18.512	0.00062	-12.4247	-0.00039	-197.065
4062	1	Extremo 2A	-0.00153	-2.887	0.00062	-12.4247	-0.0007	-191.715
4063	0	Extremo 1A	-0.00153	-56.362	-0.00093	-14.1319	-0.00087	-200.597
4063	0.5	Extremo 1A	-0.00153	-40.737	-0.00093	-14.1319	-0.00041	-176.322
4063	1	Extremo 1A	-0.00153	-25.112	-0.00093	-14.1319	6E-05	-159.86
4063	0	Extremo 2A	-0.00153	-56.362	-0.00093	-14.1319	-0.00087	-200.597
4063	0.5	Extremo 2A	-0.00153	-40.737	-0.00093	-14.1319	-0.00041	-176.322
4063	1	Extremo 2A	-0.00153	-25.112	-0.00093	-14.1319	6E-05	-159.86
4064	0	Extremo 1A	-0.00119	-76.706	-0.0021	-17.3124	-0.0014	-169.349
4064	0.5	Extremo 1A	-0.00119	-61.081	-0.0021	-17.3124	-0.00034	-134.902
4064	1	Extremo 1A	-0.00119	-45.456	-0.0021	-17.3124	0.00071	-108.268
4064	0	Extremo 2A	-0.00119	-76.706	-0.0021	-17.3124	-0.0014	-169.349
4064	0.5	Extremo 2A	-0.00119	-61.081	-0.0021	-17.3124	-0.00034	-134.902
4064	1	Extremo 2A	-0.00119	-45.456	-0.0021	-17.3124	0.00071	-108.268
4065	0	Extremo 1A	-0.00029	26.582	0.00126	-2.1011	0.00075	-123.945
4065	0.5	Extremo 1A	-0.00029	42.207	0.00126	-2.1011	0.00012	-141.142
4065	1	Extremo 1A	-0.00029	57.832	0.00126	-2.1011	-0.00051	-166.152
4065	0	Extremo 2A	-0.00029	26.582	0.00126	-2.1011	0.00075	-123.945
4065	0.5	Extremo 2A	-0.00029	42.207	0.00126	-2.1011	0.00012	-141.142
4065	1	Extremo 2A	-0.00029	57.832	0.00126	-2.1011	-0.00051	-166.152
4066	0	Extremo 1A	-0.00062	7.913	0.00164	-2.9956	0.00082	-171.534
4066	0.5	Extremo 1A	-0.00062	23.538	0.00164	-2.9956	7.2E-06	-179.397
4066	1	Extremo 1A	-0.00062	39.163	0.00164	-2.9956	-0.00081	-195.072
4066	0	Extremo 2A	-0.00062	7.913	0.00164	-2.9956	0.00082	-171.534
4066	0.5	Extremo 2A	-0.00062	23.538	0.00164	-2.9956	7.2E-06	-179.397
4066	1	Extremo 2A	-0.00062	39.163	0.00164	-2.9956	-0.00081	-195.072
4067	0	Extremo 1A	-0.00097	-12.762	0.00136	-3.6615	0.00051	-201.511
4067	0.5	Extremo 1A	-0.00097	2.863	0.00136	-3.6615	-0.00017	-199.036
4067	1	Extremo 1A	-0.00097	18.488	0.00136	-3.6615	-0.00085	-204.374
4067	0	Extremo 2A	-0.00097	-12.762	0.00136	-3.6615	0.00051	-201.511
4067	0.5	Extremo 2A	-0.00097	2.863	0.00136	-3.6615	-0.00017	-199.036
4067	1	Extremo 2A	-0.00097	18.488	0.00136	-3.6615	-0.00085	-204.374
4068	0	Extremo 1A	-0.0012	-34.648	0.00043	-4.229	-8.4E-05	-212.003
4068	0.5	Extremo 1A	-0.0012	-19.023	0.00043	-4.229	-0.0003	-198.586
4068	1	Extremo 1A	-0.0012	-3.398	0.00043	-4.229	-0.00052	-192.981
4068	0	Extremo 2A	-0.0012	-34.648	0.00043	-4.229	-8.4E-05	-212.003
4068	0.5	Extremo 2A	-0.0012	-19.023	0.00043	-4.229	-0.0003	-198.586
4068	1	Extremo 2A	-0.0012	-3.398	0.00043	-4.229	-0.00052	-192.981
4069	0	Extremo 1A	-0.00119	-56.642	-0.00076	-4.7746	-0.00069	-201.57
4069	0.5	Extremo 1A	-0.00119	-41.017	-0.00076	-4.7746	-0.00031	-177.156
4069	1	Extremo 1A	-0.00119	-25.392	-0.00076	-4.7746	7.1E-05	-160.553
4069	0	Extremo 2A	-0.00119	-56.642	-0.00076	-4.7746	-0.00069	-201.57

4069	0.5	Extremo 2A	-0.00119	-41.017	-0.00076	-4.7746	-0.00031	-177.156
4069	1	Extremo 2A	-0.00119	-25.392	-0.00076	-4.7746	7.1E-05	-160.553
4070	0	Extremo 1A	-0.00091	-77.061	-0.00164	-6.0076	-0.0011	-169.662
4070	0.5	Extremo 1A	-0.00091	-61.436	-0.00164	-6.0076	-0.00026	-135.038
4070	1	Extremo 1A	-0.00091	-45.811	-0.00164	-6.0076	0.00056	-108.226
4070	0	Extremo 2A	-0.00091	-77.061	-0.00164	-6.0076	-0.0011	-169.662
4070	0.5	Extremo 2A	-0.00091	-61.436	-0.00164	-6.0076	-0.00026	-135.038
4070	1	Extremo 2A	-0.00091	-45.811	-0.00164	-6.0076	0.00056	-108.226
4071	0	Extremo 1A	-0.00024	26.584	0.001	2.0854	0.00059	-123.966
4071	0.5	Extremo 1A	-0.00024	42.209	0.001	2.0854	9E-05	-141.164
4071	1	Extremo 1A	-0.00024	57.834	0.001	2.0854	-0.00041	-166.175
4071	0	Extremo 2A	-0.00024	26.584	0.001	2.0854	0.00059	-123.966
4071	0.5	Extremo 2A	-0.00024	42.209	0.001	2.0854	9E-05	-141.164
4071	1	Extremo 2A	-0.00024	57.834	0.001	2.0854	-0.00041	-166.175
4072	0	Extremo 1A	-0.0005	7.904	0.00127	2.8804	0.00063	-171.578
4072	0.5	Extremo 1A	-0.0005	23.529	0.00127	2.8804	-9.6E-07	-179.436
4072	1	Extremo 1A	-0.0005	39.154	0.00127	2.8804	-0.00064	-195.107
4072	0	Extremo 2A	-0.0005	7.904	0.00127	2.8804	0.00063	-171.578
4072	0.5	Extremo 2A	-0.0005	23.529	0.00127	2.8804	-9.6E-07	-179.436
4072	1	Extremo 2A	-0.0005	39.154	0.00127	2.8804	-0.00064	-195.107
4073	0	Extremo 1A	-0.00077	-12.772	0.00103	3.4772	0.00038	-201.561
4073	0.5	Extremo 1A	-0.00077	2.853	0.00103	3.4772	-0.00014	-199.081
4073	1	Extremo 1A	-0.00077	18.478	0.00103	3.4772	-0.00065	-204.414
4073	0	Extremo 2A	-0.00077	-12.772	0.00103	3.4772	0.00038	-201.561
4073	0.5	Extremo 2A	-0.00077	2.853	0.00103	3.4772	-0.00014	-199.081
4073	1	Extremo 2A	-0.00077	18.478	0.00103	3.4772	-0.00065	-204.414
4074	0	Extremo 1A	-0.00094	-34.652	0.0003	3.9717	-8.3E-05	-212.049
4074	0.5	Extremo 1A	-0.00094	-19.027	0.0003	3.9717	-0.00023	-198.629
4074	1	Extremo 1A	-0.00094	-3.402	0.0003	3.9717	-0.00038	-193.022
4074	0	Extremo 2A	-0.00094	-34.652	0.0003	3.9717	-8.3E-05	-212.049
4074	0.5	Extremo 2A	-0.00094	-19.027	0.0003	3.9717	-0.00023	-198.629
4074	1	Extremo 2A	-0.00094	-3.402	0.0003	3.9717	-0.00038	-193.022
4075	0	Extremo 1A	-0.00092	-56.644	-0.00062	4.3944	-0.00055	-201.606
4075	0.5	Extremo 1A	-0.00092	-41.019	-0.00062	4.3944	-0.00024	-177.19
4075	1	Extremo 1A	-0.00092	-25.394	-0.00062	4.3944	7.3E-05	-160.586
4075	0	Extremo 2A	-0.00092	-56.644	-0.00062	4.3944	-0.00055	-201.606
4075	0.5	Extremo 2A	-0.00092	-41.019	-0.00062	4.3944	-0.00024	-177.19
4075	1	Extremo 2A	-0.00092	-25.394	-0.00062	4.3944	7.3E-05	-160.586
4076	0	Extremo 1A	-0.0007	-77.068	-0.00128	5.1569	-0.00084	-169.682
4076	0.5	Extremo 1A	-0.0007	-61.443	-0.00128	5.1569	-0.00019	-135.054
4076	1	Extremo 1A	-0.0007	-45.818	-0.00128	5.1569	0.00045	-108.239
4076	0	Extremo 2A	-0.0007	-77.068	-0.00128	5.1568	-0.00084	-169.682
4076	0.5	Extremo 2A	-0.0007	-61.443	-0.00128	5.1568	-0.00019	-135.054
4076	1	Extremo 2A	-0.0007	-45.818	-0.00128	5.1568	0.00045	-108.239
4077	0	Extremo 1A	-0.0002	26.487	0.00079	5.853	0.00046	-123.202
4077	0.5	Extremo 1A	-0.0002	42.112	0.00079	5.853	6.6E-05	-140.352
4077	1	Extremo 1A	-0.0002	57.737	0.00079	5.853	-0.00033	-165.314
4077	0	Extremo 2A	-0.0002	26.487	0.00079	5.853	0.00046	-123.202
4077	0.5	Extremo 2A	-0.0002	42.112	0.00079	5.853	6.6E-05	-140.352
4077	1	Extremo 2A	-0.0002	57.737	0.00079	5.853	-0.00033	-165.314
4078	0	Extremo 1A	-0.0004	8.556	0.00099	8.2645	0.00049	-169.673
4078	0.5	Extremo 1A	-0.0004	24.181	0.00099	8.2645	-5.6E-06	-177.857
4078	1	Extremo 1A	-0.0004	39.806	0.00099	8.2645	-0.0005	-193.853
4078	0	Extremo 2A	-0.0004	8.556	0.00099	8.2645	0.00049	-169.673
4078	0.5	Extremo 2A	-0.0004	24.181	0.00099	8.2645	-5.6E-06	-177.857
4078	1	Extremo 2A	-0.0004	39.806	0.00099	8.2645	-0.0005	-193.853
4079	0	Extremo 1A	-0.00061	-11.865	0.00078	10.3009	0.00028	-199.337
4079	0.5	Extremo 1A	-0.00061	3.76	0.00078	10.3009	-0.00011	-197.311
4079	1	Extremo 1A	-0.00061	19.385	0.00078	10.3009	-0.0005	-203.097
4079	0	Extremo 2A	-0.00061	-11.865	0.00078	10.3009	0.00028	-199.337
4079	0.5	Extremo 2A	-0.00061	3.76	0.00078	10.3009	-0.00011	-197.311
4079	1	Extremo 2A	-0.00061	19.385	0.00078	10.3009	-0.0005	-203.097
4080	0	Extremo 1A	-0.00073	-34.148	0.00021	12.1661	-7.9E-05	-210.382
4080	0.5	Extremo 1A	-0.00073	-18.523	0.00021	12.1661	-0.00018	-197.214
4080	1	Extremo 1A	-0.00073	-2.898	0.00021	12.1661	-0.00029	-191.859
4080	0	Extremo 2A	-0.00073	-34.148	0.00021	12.1661	-7.9E-05	-210.382
4080	0.5	Extremo 2A	-0.00073	-18.523	0.00021	12.1661	-0.00018	-197.214
4080	1	Extremo 2A	-0.00073	-2.898	0.00021	12.1661	-0.00029	-191.859
4081	0	Extremo 1A	-0.00072	-56.368	-0.0005	13.7293	-0.00043	-200.714
4081	0.5	Extremo 1A	-0.00072	-40.743	-0.0005	13.7293	-0.00018	-176.436
4081	1	Extremo 1A	-0.00072	-25.118	-0.0005	13.7293	7E-05	-159.971
4081	0	Extremo 2A	-0.00072	-56.368	-0.0005	13.7293	-0.00043	-200.714
4081	0.5	Extremo 2A	-0.00072	-40.743	-0.0005	13.7293	-0.00018	-176.436
4081	1	Extremo 2A	-0.00072	-25.118	-0.0005	13.7293	7E-05	-159.971
4082	0	Extremo 1A	-0.00054	-76.731	-0.001	16.4352	-0.00065	-169.412
4082	0.5	Extremo 1A	-0.00054	-61.106	-0.001	16.4352	-0.00015	-134.953
4082	1	Extremo 1A	-0.00054	-45.481	-0.001	16.4352	0.00035	-108.307
4082	0	Extremo 2A	-0.00054	-76.731	-0.001	16.4352	-0.00065	-169.412
4082	0.5	Extremo 2A	-0.00054	-61.106	-0.001	16.4352	-0.00015	-134.953
4082	1	Extremo 2A	-0.00054	-45.481	-0.001	16.4352	0.00035	-108.307
4083	0	Extremo 1A	-0.00017	25.72	0.00063	8.3592	0.00036	-122.442
4083	0.5	Extremo 1A	-0.00017	41.345	0.00063	8.3592	4.8E-05	-139.209
4083	1	Extremo 1A	-0.00017	56.97	0.00063	8.3592	-0.00027	-163.788
4083	0	Extremo 2A	-0.00017	25.72	0.00063	8.3592	0.00036	-122.442
4083	0.5	Extremo 2A	-0.00017	41.345	0.00063	8.3592	4.8E-05	-139.209
4083	1	Extremo 2A	-0.00017	56.97	0.00063	8.3592	-0.00027	-163.788
4084	0	Extremo 1A	-0.00032	9.659	0.00077	11.8137	0.00038	-165.811
4084	0.5	Extremo 1A	-0.00032	25.284	0.00077	11.8137	-8E-06	-174.547
4084	1	Extremo 1A	-0.00032	40.909	0.00077	11.8137	-0.00039	-191.095
4084	0	Extremo 2A	-0.00032	9.659	0.00077	11.8137	0.00038	-165.811
4084	0.5	Extremo 2A	-0.00032	25.284	0.00077	11.8137	-8E-06	-174.547
4084	1	Extremo 2A	-0.00032	40.909	0.00077	11.8137	-0.00039	-191.095
4085	0	Extremo 1A	-0.00048	-9.965	0.00059	15.8577	0.00021	-193.845
4085	0.5	Extremo 1A	-0.00048	5.66	0.00059	15.8577	-8.9E-05	-192.769
4085	1	Extremo 1A	-0.00048	21.285	0.00059	15.8577	-0.00039	-199.505
4085	0	Extremo 2A	-0.00048	-9.965	0.00059	15.8577	0.00021	-193.845
4085	0.5	Extremo 2A	-0.00048	5.66	0.00059	15.8577	-8.9E-05	-192.769
4085	1	Extremo 2A	-0.00048	21.285	0.00059	15.8577	-0.00039	-199.505
4086	0	Extremo 1A	-0.00057	-32.867	0.00014	20.4878	-7.1E-05	-205.91
4086	0.5	Extremo 1A	-0.00057	-17.242	0.00014	20.4878	-0.00014	-193.383
4086	1	Extremo 1A	-0.00057	-1.617	0.00014	20.4878	-0.00021	-188.668
4086	0	Extremo 2A	-0.00057	-32.867	0.00014	20.4878	-7.1E-05	-205.91
4086	0.5	Extremo 2A	-0.00057	-17.242	0.00014	20.4878	-0.00014	-193.383
4086	1	Extremo 2A	-0.00057	-1.617	0.00014	20.4878	-0.00021	-188.668
4087	0	Extremo 1A	-0.00056	-55.413	-0.00041	23.8215	-0.00034	-198.582
4087	0.5	Extremo 1A	-0.00056	-39.788	-0.00041	23.8215	-0.00014	-174.782
4087	1	Extremo 1A	-0.00056	-24.163	-0.00041	23.8215	6.5E-05	-158.795
4087	0	Extremo 2A	-0.00056	-55.413	-0.00041	23.8215	-0.00034	-198.582
4087	0.5	Extremo 2A	-0.00056	-39.788	-0.00041	23.8215	-0.00014	-174.782
4087	1	Extremo 2A	-0.00056	-24.163	-0.00041	23.8215	6.5E-05	-158.795
4088	0	Extremo 1A	-0.00042	-75.57	-0.00078	28.0295	-0.0005	-169.039
4088	0.5	Extremo 1A	-0.00042	-59.945	-0.00078	28.0295	-0.00011	-135.161
4088	1	Extremo 1A	-0.00042	-44.32	-0.00078	28.0295	0.00028	-109.095
4088	0	Extremo 2A	-0.00042	-75.57	-0.00078	28.0295	-0.0005	-169.039
4088	0.5	Extremo 2A	-0.00042	-59.945	-0.00078	28.0295	-0.00011	-135.161
4088	1	Extremo 2A	-0.00042	-44.32	-0.00078	28.0295	0.00028	-109.095
4089	0	Extremo 1A	-0.00014	22.814	0.0005	9.3791	0.00028	-124.661
4089	0.5	Extremo 1A	-0.00014	38.439	0.0005	9.3791	3.5E-05	-139.974
4089	1	Extremo 1A	-0.00014	54.064	0.0005	9.3791	-0.00021	-163.1
4089	0	Extremo 2A	-0.00014	22.814	0.0005	9.3791	0.00028	-124.661
4089	0.5	Extremo 2A	-0.00014	38.439	0.0005	9.3791	3.5E-05	-139.974
4089	1	Extremo 2A	-0.00014	54.064	0.0005	9.3791	-0.00021	-163.1
4090	0	Extremo 1A	-0.00026	9.612	0.0006	10.9347	0.00029	-161.408
4090	0.5	Extremo 1A	-0.00026	25.237	0.0006	10.9347	-9E-06	-170.12
4090	1	Extremo 1A	-0.00026	40.862	0.0006	10.9347	-0.00031	-186.645
4090	0	Extremo 2A	-0.00026	9.612	0.0006	10.9347	0.00029	-161.408
4090	0.5	Extremo 2A	-0.00026	25.237	0.0006	10.9347	-9E-06	-170.12
4090	1	Extremo 2A	-0.00026	40.862	0.0006	10.9347	-0.00031	-186.645
4091	0	Extremo 1A	-0.00038	-8.082	0.00045	17.9843	0.00015	-182.737
4091	0.5	Extremo 1A	-0.00038	7.543	0.00045	17.9843	-7.1E-05	-182.602
4091	1	Extremo 1A	-0.00038	23.168	0.00045	17.9843	-0.0003	-190.28
4091	0	Extremo 2A	-0.00038	-8.082	0.00045	17.9843	0.00015	-182.737
4091	0.5	Extremo 2A	-0.00038	7.543	0.00045	17.9843	-7.1E-05	-182.602
4091	1	Extremo 2A	-0.00038	23.168	0.00045	17.9843	-0.0003	-190.28
4092	0	Extremo 1A	-0.00045	-29.176	9.5E-05	29.7203	-6.3E-05	-194.836
4092	0.5	Extremo 1A	-0.00045	-13.551	9.5E-05	29.7203	-0.00011	-184.154
4092	1	Extremo 1A	-0.00045	2.074	9.5E-05	29.7203	-0.00016	-181.285
4092	0	Extremo 2A	-0.00045	-29.176	9.5E-05	29.7203	-6.3E-05	-194.836
4092	0.5	Extremo 2A	-0.00045	-13.551	9.5E-05	29.7203	-0.00011	-184.154
4092	1	Extremo 2A	-0.00045	2.074	9.5E-05	29.7203	-0.00016	-181.285
4093	0	Extremo 1A	-0.00043	-51.61	-0.00033	36.2248	-0.00027	-194.518
4093	0.5	Extremo 1A	-0.00043	-35.985	-0.00033	36.2248	-0.00011	-172.62
4093	1	Extremo 1A	-0.00043	-20.36	-0.00033	36.2248	5.8E-05	-158.533
4093	0	Extremo 2A	-0.00043	-51.61	-0.00033	36.2247	-0.00027	-194.519

4093	0.5	Extremo 2A	-0.00043	-35.985	-0.00033	36.2247	-0.00011	-172.62
4093	1	Extremo 2A	-0.00043	-20.36	-0.00033	36.2247	5.8E-05	-158.533
4094	0	Extremo 1A	-0.00032	-72.201	-0.00061	39.5318	-0.00039	-169.795
4094	0.5	Extremo 1A	-0.00032	-56.576	-0.00061	39.5318	-8.4E-05	-137.601
4094	1	Extremo 1A	-0.00032	-40.951	-0.00061	39.5318	0.00022	-113.219
4094	0	Extremo 2A	-0.00032	-72.201	-0.00061	39.5318	-0.00039	-169.795
4094	0.5	Extremo 2A	-0.00032	-56.576	-0.00061	39.5318	-8.4E-05	-137.601
4094	1	Extremo 2A	-0.00032	-40.951	-0.00061	39.5318	0.00022	-113.219
4095	0	Extremo 1A	-0.00011	18.042	0.00039	12.1946	0.00022	-137.328
4095	0.5	Extremo 1A	-0.00011	33.667	0.00039	12.1946	2.6E-05	-150.256
4095	1	Extremo 1A	-0.00011	49.292	0.00039	12.1946	-0.00017	-170.995
4095	0	Extremo 2A	-0.00011	18.042	0.00039	12.1946	0.00022	-137.328
4095	0.5	Extremo 2A	-0.00011	33.667	0.00039	12.1946	2.6E-05	-150.255
4095	1	Extremo 2A	-0.00011	49.292	0.00039	12.1946	-0.00017	-170.995
4096	0	Extremo 1A	-0.00021	-0.263	0.00046	-0.1783	0.00022	-165.328
4096	0.5	Extremo 1A	-0.00021	15.362	0.00046	-0.1783	-9.1E-06	-169.103
4096	1	Extremo 1A	-0.00021	30.987	0.00046	-0.1783	-0.00024	-180.69
4096	0	Extremo 2A	-0.00021	-0.263	0.00046	-0.1783	0.00022	-165.328
4096	0.5	Extremo 2A	-0.00021	15.362	0.00046	-0.1783	-9.1E-06	-169.103
4096	1	Extremo 2A	-0.00021	30.987	0.00046	-0.1783	-0.00024	-180.69
4097	0	Extremo 1A	-0.0003	-13.244	0.00034	11.8448	0.00011	-162.129
4097	0.5	Extremo 1A	-0.0003	2.381	0.00034	11.8448	-5.7E-05	-159.413
4097	1	Extremo 1A	-0.0003	18.006	0.00034	11.8448	-0.00023	-164.51
4097	0	Extremo 2A	-0.0003	-13.244	0.00034	11.8448	0.00011	-162.129
4097	0.5	Extremo 2A	-0.0003	2.381	0.00034	11.8448	-5.7E-05	-159.413
4097	1	Extremo 2A	-0.0003	18.006	0.00034	11.8448	-0.00023	-164.51
4098	0	Extremo 1A	-0.00035	-15.579	6.2E-05	42.102	-5.5E-05	-165.459
4098	0.5	Extremo 1A	-0.00035	0.046	6.2E-05	42.102	-8.6E-05	-161.576
4098	1	Extremo 1A	-0.00035	15.671	6.2E-05	42.102	-0.00012	-165.505
4098	0	Extremo 2A	-0.00035	-15.579	6.2E-05	42.102	-5.5E-05	-165.459
4098	0.5	Extremo 2A	-0.00035	0.046	6.2E-05	42.102	-8.6E-05	-161.576
4098	1	Extremo 2A	-0.00035	15.671	6.2E-05	42.102	-0.00012	-165.505
4099	0	Extremo 1A	-0.00034	-34.765	-0.00026	54.9608	-0.00021	-186.967
4099	0.5	Extremo 1A	-0.00034	-19.14	-0.00026	54.9608	-8.2E-05	-173.491
4099	1	Extremo 1A	-0.00034	-3.515	-0.00026	54.9608	5.1E-05	-167.827
4099	0	Extremo 2A	-0.00034	-34.765	-0.00026	54.9608	-0.00021	-186.967
4099	0.5	Extremo 2A	-0.00034	-19.14	-0.00026	54.9608	-8.2E-05	-173.491
4099	1	Extremo 2A	-0.00034	-3.515	-0.00026	54.9608	5.1E-05	-167.827
4100	0	Extremo 1A	-0.00025	-65.669	-0.00048	47.106	-0.0003	-178.164
4100	0.5	Extremo 1A	-0.00025	-50.044	-0.00048	47.106	-6.4E-05	-149.236
4100	1	Extremo 1A	-0.00025	-34.419	-0.00048	47.106	0.00018	-128.121
4100	0	Extremo 2A	-0.00025	-65.669	-0.00048	47.1059	-0.0003	-178.164
4100	0.5	Extremo 2A	-0.00025	-50.044	-0.00048	47.1059	-6.4E-05	-149.236
4100	1	Extremo 2A	-0.00025	-34.419	-0.00048	47.1059	0.00018	-128.121
4101	0	Extremo 1A	-9E-05	37.286	0.00031	30.6475	0.00017	-167.806
4101	0.5	Extremo 1A	-9E-05	52.911	0.00031	30.6475	1.9E-05	-190.356
4101	1	Extremo 1A	-9E-05	68.536	0.00031	30.6475	-0.00014	-220.717
4101	0	Extremo 2A	-9E-05	37.286	0.00031	30.6474	0.00017	-167.806
4101	0.5	Extremo 2A	-9E-05	52.911	0.00031	30.6474	1.9E-05	-190.355
4101	1	Extremo 2A	-9E-05	68.536	0.00031	30.6474	-0.00014	-220.717
4102	0	Extremo 1A	-0.00017	-60.825	0.00036	-33.5419	0.00017	-214.43
4102	0.5	Extremo 1A	-0.00017	-45.2	0.00036	-33.5419	-8.6E-06	-187.923
4102	1	Extremo 1A	-0.00017	-29.575	0.00036	-33.5419	-0.00019	-169.23
4102	0	Extremo 2A	-0.00017	-60.825	0.00036	-33.5418	0.00017	-214.43
4102	0.5	Extremo 2A	-0.00017	-45.2	0.00036	-33.5418	-8.6E-06	-187.923
4102	1	Extremo 2A	-0.00017	-29.575	0.00036	-33.5418	-0.00019	-169.23
4103	0	Extremo 1A	-0.00024	-50.074	0.00026	-9.0115	8.5E-05	-127.338
4103	0.5	Extremo 1A	-0.00024	-34.449	0.00026	-9.0115	-4.5E-05	-106.207
4103	1	Extremo 1A	-0.00024	-18.824	0.00026	-9.0115	-0.00018	-92.889
4103	0	Extremo 2A	-0.00024	-50.074	0.00026	-9.0115	8.5E-05	-127.338
4103	0.5	Extremo 2A	-0.00024	-34.449	0.00026	-9.0115	-4.5E-05	-106.207
4103	1	Extremo 2A	-0.00024	-18.824	0.00026	-9.0115	-0.00018	-92.8893
4104	0	Extremo 1A	-0.00028	31.669	4E-05	59.6292	-4.7E-05	-87.6973
4104	0.5	Extremo 1A	-0.00028	47.294	4E-05	59.6292	-6.7E-05	-107.438
4104	1	Extremo 1A	-0.00028	62.919	4E-05	59.6292	-8.7E-05	-134.991
4104	0	Extremo 2A	-0.00028	31.669	4E-05	59.6291	-4.7E-05	-87.6975
4104	0.5	Extremo 2A	-0.00028	47.294	4E-05	59.6291	-6.7E-05	-107.438
4104	1	Extremo 2A	-0.00028	62.919	4E-05	59.6291	-8.7E-05	-134.991
4105	0	Extremo 1A	-0.00026	39.013	-0.00021	88.2062	-0.00017	-168.065
4105	0.5	Extremo 1A	-0.00026	54.638	-0.00021	88.2062	-6.3E-05	-191.477
4105	1	Extremo 1A	-0.00026	70.263	-0.00021	88.2062	4.3E-05	-222.703
4105	0	Extremo 2A	-0.00026	39.013	-0.00021	88.2061	-0.00017	-168.065
4105	0.5	Extremo 2A	-0.00026	54.638	-0.00021	88.2061	-6.3E-05	-191.477
4105	1	Extremo 2A	-0.00026	70.263	-0.00021	88.2061	4.3E-05	-222.703
4106	0	Extremo 1A	-0.00019	-73.696	-0.00037	35.2158	-0.00024	-223.346
4106	0.5	Extremo 1A	-0.00019	-58.071	-0.00037	35.2158	-4.9E-05	-190.404
4106	1	Extremo 1A	-0.00019	-42.446	-0.00037	35.2158	0.00014	-165.275
4106	0	Extremo 2A	-0.00019	-73.696	-0.00037	35.2158	-0.00024	-223.346
4106	0.5	Extremo 2A	-0.00019	-58.071	-0.00037	35.2158	-4.9E-05	-190.404
4106	1	Extremo 2A	-0.00019	-42.446	-0.00037	35.2158	0.00014	-165.275
4107	0	Extremo 1A	-7.3E-05	232.775	0.00025	81.7689	0.00014	-175.522
4107	0.5	Extremo 1A	-7.3E-05	248.4	0.00025	81.7689	1.4E-05	-295.816
4107	1	Extremo 1A	-7.3E-05	264.025	0.00025	81.7689	-0.00011	-423.922
4107	0	Extremo 2A	-7.3E-05	232.774	0.00025	81.7687	0.00014	-175.522
4107	0.5	Extremo 2A	-7.3E-05	248.399	0.00025	81.7687	1.4E-05	-295.815
4107	1	Extremo 2A	-7.3E-05	264.024	0.00025	81.7687	-0.00011	-423.921
4108	0	Extremo 1A	-0.00013	-332.188	0.00028	-93.8561	0.00013	-423.707
4108	0.5	Extremo 1A	-0.00013	-316.563	0.00028	-93.8561	-7.8E-06	-261.519
4108	1	Extremo 1A	-0.00013	-300.938	0.00028	-93.8561	-0.00015	-107.144
4108	0	Extremo 2A	-0.00013	-332.187	0.00028	-93.8559	0.00013	-423.706
4108	0.5	Extremo 2A	-0.00013	-316.562	0.00028	-93.8559	-7.8E-06	-261.519
4108	1	Extremo 2A	-0.00013	-300.937	0.00028	-93.8559	-0.00015	-107.144
4109	0	Extremo 1A	-0.00019	-157.075	0.0002	-34.872	6.4E-05	-71.1714
4109	0.5	Extremo 1A	-0.00019	-141.45	0.0002	-34.872	-3.6E-05	3.4596
4109	1	Extremo 1A	-0.00019	-125.825	0.0002	-34.872	-0.00014	70.2781
4109	0	Extremo 2A	-0.00019	-157.074	0.0002	-34.8719	6.4E-05	-71.1716
4109	0.5	Extremo 2A	-0.00019	-141.449	0.0002	-34.8719	-3.6E-05	3.4592
4109	1	Extremo 2A	-0.00019	-125.824	0.0002	-34.8719	-0.00014	70.2776
4110	0	Extremo 1A	-0.00022	147.478	2.5E-05	67.3779	-4E-05	83.2139
4110	0.5	Extremo 1A	-0.00022	163.103	2.5E-05	67.3779	-5.2E-05	5.5688
4110	1	Extremo 1A	-0.00022	178.728	2.5E-05	67.3779	-6.5E-05	-79.8888
4110	0	Extremo 2A	-0.00022	147.477	2.5E-05	67.3779	-4E-05	83.2134
4110	0.5	Extremo 2A	-0.00022	163.102	2.5E-05	67.3779	-5.2E-05	5.5684
4110	1	Extremo 2A	-0.00022	178.727	2.5E-05	67.3779	-6.5E-05	-79.8891
4111	0	Extremo 1A	-0.0002	331.455	-0.00017	132.691	-0.00013	-89.7223
4111	0.5	Extremo 1A	-0.0002	347.08	-0.00017	132.691	-4.8E-05	-259.356
4111	1	Extremo 1A	-0.0002	362.705	-0.00017	132.691	3.7E-05	-436.802
4111	0	Extremo 2A	-0.0002	331.454	-0.00017	132.69	-0.00013	-89.7225
4111	0.5	Extremo 2A	-0.0002	347.079	-0.00017	132.69	-4.8E-05	-259.356
4111	1	Extremo 2A	-0.0002	362.704	-0.00017	132.69	3.7E-05	-436.802
4112	0	Extremo 1A	-0.00015	-225.476	-0.00029	-24.0781	-0.00018	-410.562
4112	0.5	Extremo 1A	-0.00015	-209.851	-0.00029	-24.0781	-3.7E-05	-301.73
4112	1	Extremo 1A	-0.00015	-194.226	-0.00029	-24.0781	0.00011	-200.711
4112	0	Extremo 2A	-0.00015	-225.476	-0.00029	-24.078	-0.00018	-410.562
4112	0.5	Extremo 2A	-0.00015	-209.851	-0.00029	-24.078	-3.7E-05	-301.73
4112	1	Extremo 2A	-0.00015	-194.226	-0.00029	-24.078	0.00011	-200.711
4113	0	Extremo 1A	-5.9E-05	1022.14	0.00019	-0.0297	0.00011	61.9618
4113	0.5	Extremo 1A	-5.9E-05	1037.77	0.00019	-0.0297	9.8E-06	-453.015
4113	1	Extremo 1A	-5.9E-05	1053.39	0.00019	-0.0297	-8.7E-05	-975.804
4113	0	Extremo 2A	-5.9E-05	1022.14	0.00019	-0.0297	0.00011	61.9615
4113	0.5	Extremo 2A	-5.9E-05	1037.76	0.00019	-0.0297	9.8E-06	-453.014
4113	1	Extremo 2A	-5.9E-05	1053.39	0.00019	-0.0297	-8.7E-05	-975.802
4114	0	Extremo 1A	-0.00011	-1187.5	0.00022	-0.0443	0.0001	-979.97
4114	0.5	Extremo 1A	-0.00011	-1171.87	0.00022	-0.0443	-7E-06	-390.127
4114	1	Extremo 1A	-0.00011	-1156.25	0.00022	-0.0443	-0.00012	191.903
4114	0	Extremo 2A	-0.00011	-1187.5	0.00022	-0.0443	0.0001	-979.968
4114	0.5	Extremo 2A	-0.00011	-1171.87	0.00022	-0.0443	-7E-06	-390.127
4114	1	Extremo 2A	-0.00011	-1156.25	0.00022	-0.0443	-0.00012	191.902
4115	0	Extremo 1A	-0.00015	-263.852	0.00015	-0.0475	4.7E-05	20.5482
4115	0.5	Extremo 1A	-0.00015	-248.227	0.00015	-0.0475	-2.9E-05	148.568
4115	1	Extremo 1A	-0.00015	-232.602	0.00015	-0.0475	-0.0001	268.775
4115	0	Extremo 2A	-0.00015	-263.851	0.00015	-0.0475	4.7E-05	20.5478
4115	0.5	Extremo 2A	-0.00015	-248.226	0.00015	-0.0475	-2.9E-05	148.567
4115	1	Extremo 2A	-0.00015	-232.601	0.00015	-0.0475	-0.0001	268.774
4116	0	Extremo 1A	-0.00017	257.101	1.5E-05	-0.0505	-3.3E-05	286.062
4116	0.5	Extremo 1A	-0.00017	272.726	1.5E-05	-0.0505	-4.1E-05	153.605
4116	1	Extremo 1A	-0.00017	288.351	1.5E-05	-0.0505	-4.8E-05	13.336
4116	0	Extremo 2A	-0.00017	257.101	1.5E-05	-0.0505	-3.3E-05	286.061
4116	0.5	Extremo 2A	-0.00017	272.726	1.5E-05	-0.0505	-4.1E-05	153.605
4116	1	Extremo 2A	-0.00017	288.351	1.5E-05	-0.0505	-4.8E-05	13.3355
4117	0	Extremo 1A	-0.00016	1203.8	-0.00014	-0.0641	-0.00011	223.072
4117	0.5	Extremo 1A	-0.00016	1219.42	-0.00014	-0.0641	-3.7E-05	-382.733
4117	1	Extremo 1A	-0.00016	1235.05	-0.00014	-0.0641	3.1E-05	-996.35
4117	0	Extremo 2A	-0.00016	1203.8	-0.00014	-0.0641	-0.00011	223.071

4117	0.5	Extremo 2A	-0.00016	1219.42	-0.00014	-0.0641	-3.7E-05	-382.733
4117	1	Extremo 2A	-0.00016	1235.05	-0.00014	-0.0641	3.1E-05	-996.349
4118	0	Extremo 1A	-0.00012	-940.84	-0.00023	-0.1464	-0.00014	-947.003
4118	0.5	Extremo 1A	-0.00012	-925.215	-0.00023	-0.1464	-2.8E-05	-480.49
4118	1	Extremo 1A	-0.00012	-909.59	-0.00023	-0.1464	8.6E-05	-21.7883
4118	0	Extremo 2A	-0.00012	-940.839	-0.00023	-0.1463	-0.00014	-947.002
4118	0.5	Extremo 2A	-0.00012	-925.214	-0.00023	-0.1463	-2.8E-05	-480.489
4118	1	Extremo 2A	-0.00012	-909.589	-0.00023	-0.1463	8.6E-05	-21.7884
4119	0	Extremo 1A	-4.8E-05	232.775	0.00015	-81.8279	8.4E-05	-175.523
4119	0.5	Extremo 1A	-4.8E-05	248.4	0.00015	-81.8279	7.1E-06	-295.817
4119	1	Extremo 1A	-4.8E-05	264.025	0.00015	-81.8279	-7E-05	-423.923
4119	0	Extremo 2A	-4.8E-05	232.775	0.00015	-81.8278	8.4E-05	-175.523
4119	0.5	Extremo 2A	-4.8E-05	248.4	0.00015	-81.8278	7.1E-06	-295.816
4119	1	Extremo 2A	-4.8E-05	264.025	0.00015	-81.8278	-7E-05	-423.923
4120	0	Extremo 1A	-8.4E-05	-332.188	0.00017	93.7677	7.9E-05	-423.709
4120	0.5	Extremo 1A	-8.4E-05	-316.563	0.00017	93.7677	-6.1E-06	-261.521
4120	1	Extremo 1A	-8.4E-05	-300.938	0.00017	93.7677	-9.1E-05	-107.146
4120	0	Extremo 2A	-8.4E-05	-332.187	0.00017	93.7675	7.9E-05	-423.708
4120	0.5	Extremo 2A	-8.4E-05	-316.562	0.00017	93.7675	-6.1E-06	-261.521
4120	1	Extremo 2A	-8.4E-05	-300.937	0.00017	93.7675	-9.1E-05	-107.146
4121	0	Extremo 1A	-0.00012	-157.075	0.00012	34.7771	3.5E-05	-71.1736
4121	0.5	Extremo 1A	-0.00012	-141.45	0.00012	34.7771	-2.3E-05	3.4575
4121	1	Extremo 1A	-0.00012	-125.825	0.00012	34.7771	-8.1E-05	70.2761
4121	0	Extremo 2A	-0.00012	-157.074	0.00012	34.777	3.5E-05	-71.1738
4121	0.5	Extremo 2A	-0.00012	-141.449	0.00012	34.777	-2.3E-05	3.4571
4121	1	Extremo 2A	-0.00012	-125.824	0.00012	34.777	-8.1E-05	70.2755
4122	0	Extremo 1A	-0.00013	147.477	8.2E-06	-67.4791	-2.8E-05	83.2119
4122	0.5	Extremo 1A	-0.00013	163.102	8.2E-06	-67.4791	-3.2E-05	5.5669
4122	1	Extremo 1A	-0.00013	178.727	8.2E-06	-67.4791	-3.6E-05	-79.8906
4122	0	Extremo 2A	-0.00013	147.477	8.2E-06	-67.479	-2.8E-05	83.2113
4122	0.5	Extremo 2A	-0.00013	163.102	8.2E-06	-67.479	-3.2E-05	5.5665
4122	1	Extremo 2A	-0.00013	178.727	8.2E-06	-67.479	-3.6E-05	-79.8909
4123	0	Extremo 1A	-0.00012	331.455	-0.00011	-132.819	-8.3E-05	-89.7238
4123	0.5	Extremo 1A	-0.00012	347.08	-0.00011	-132.819	-2.8E-05	-259.357
4123	1	Extremo 1A	-0.00012	362.705	-0.00011	-132.819	2.6E-05	-436.804
4123	0	Extremo 2A	-0.00012	331.454	-0.00011	-132.819	-8.3E-05	-89.7241
4123	0.5	Extremo 2A	-0.00012	347.079	-0.00011	-132.819	-2.8E-05	-259.357
4123	1	Extremo 2A	-0.00012	362.704	-0.00011	-132.819	2.6E-05	-436.803
4124	0	Extremo 1A	-9E-05	-225.476	-0.00018	23.7852	-0.00011	-410.563
4124	0.5	Extremo 1A	-9E-05	-209.851	-0.00018	23.7852	-2.1E-05	-301.731
4124	1	Extremo 1A	-9E-05	-194.226	-0.00018	23.7852	6.8E-05	-200.711
4124	0	Extremo 2A	-9E-05	-225.476	-0.00018	23.7852	-0.00011	-410.562
4124	0.5	Extremo 2A	-9E-05	-209.851	-0.00018	23.7852	-2.1E-05	-301.731
4124	1	Extremo 2A	-9E-05	-194.226	-0.00018	23.7852	6.8E-05	-200.711
4125	0	Extremo 1A	-3.8E-05	37.286	0.00012	-30.7056	6.6E-05	-167.809
4125	0.5	Extremo 1A	-3.8E-05	52.911	0.00012	-30.7056	5.1E-06	-190.358
4125	1	Extremo 1A	-3.8E-05	68.536	0.00012	-30.7056	-5.5E-05	-220.72
4125	0	Extremo 2A	-3.8E-05	37.286	0.00012	-30.7055	6.6E-05	-167.809
4125	0.5	Extremo 2A	-3.8E-05	52.911	0.00012	-30.7055	5.1E-06	-190.358
4125	1	Extremo 2A	-3.8E-05	68.536	0.00012	-30.7055	-5.5E-05	-220.72
4126	0	Extremo 1A	-6.7E-05	-60.825	0.00013	33.4543	6.1E-05	-214.434
4126	0.5	Extremo 1A	-6.7E-05	-45.2	0.00013	33.4543	-5.2E-06	-187.928
4126	1	Extremo 1A	-6.7E-05	-29.575	0.00013	33.4543	-7.1E-05	-169.234
4126	0	Extremo 2A	-6.7E-05	-60.825	0.00013	33.4542	6.1E-05	-214.434
4126	0.5	Extremo 2A	-6.7E-05	-45.2	0.00013	33.4542	-5.2E-06	-187.928
4126	1	Extremo 2A	-6.7E-05	-29.575	0.00013	33.4542	-7.1E-05	-169.234
4127	0	Extremo 1A	-9.2E-05	-50.074	8.9E-05	8.917	2.6E-05	-127.343
4127	0.5	Extremo 1A	-9.2E-05	-34.449	8.9E-05	8.917	-1.8E-05	-106.212
4127	1	Extremo 1A	-9.2E-05	-18.824	8.9E-05	8.917	-6.2E-05	-92.8935
4127	0	Extremo 2A	-9.2E-05	-50.074	8.9E-05	8.9169	2.6E-05	-127.343
4127	0.5	Extremo 2A	-9.2E-05	-34.449	8.9E-05	8.9169	-1.8E-05	-106.212
4127	1	Extremo 2A	-9.2E-05	-18.824	8.9E-05	8.9169	-6.2E-05	-92.8937
4128	0	Extremo 1A	-0.0001	31.668	3.8E-06	-59.7305	-2.3E-05	-87.7019
4128	0.5	Extremo 1A	-0.0001	47.293	3.8E-06	-59.7305	-2.5E-05	-107.442
4128	1	Extremo 1A	-0.0001	62.918	3.8E-06	-59.7305	-2.7E-05	-134.995
4128	0	Extremo 2A	-0.0001	31.668	3.8E-06	-59.7304	-2.3E-05	-87.7021
4128	0.5	Extremo 2A	-0.0001	47.293	3.8E-06	-59.7304	-2.5E-05	-107.442
4128	1	Extremo 2A	-0.0001	62.918	3.8E-06	-59.7304	-2.7E-05	-134.995
4129	0	Extremo 1A	-9.6E-05	39.012	-8.7E-05	-88.335	-6.5E-05	-168.068
4129	0.5	Extremo 1A	-9.6E-05	54.637	-8.7E-05	-88.335	-2.2E-05	-191.48
4129	1	Extremo 1A	-9.6E-05	70.262	-8.7E-05	-88.335	2.1E-05	-222.705
4129	0	Extremo 2A	-9.6E-05	39.012	-8.7E-05	-88.3348	-6.5E-05	-168.068
4129	0.5	Extremo 2A	-9.6E-05	54.637	-8.7E-05	-88.3348	-2.2E-05	-191.48
4129	1	Extremo 2A	-9.6E-05	70.262	-8.7E-05	-88.3348	2.1E-05	-222.705
4130	0	Extremo 1A	-7E-05	-73.697	-0.00014	-35.5093	-8.6E-05	-223.348
4130	0.5	Extremo 1A	-7E-05	-58.072	-0.00014	-35.5093	-1.6E-05	-190.406
4130	1	Extremo 1A	-7E-05	-42.447	-0.00014	-35.5093	5.4E-05	-165.276
4130	0	Extremo 2A	-7E-05	-73.697	-0.00014	-35.5092	-8.6E-05	-223.348
4130	0.5	Extremo 2A	-7E-05	-58.072	-0.00014	-35.5092	-1.6E-05	-190.406
4130	1	Extremo 2A	-7E-05	-42.447	-0.00014	-35.5092	5.4E-05	-165.276
4131	0	Extremo 1A	-3.1E-05	18.043	9.6E-05	-12.2508	5.2E-05	-137.333
4131	0.5	Extremo 1A	-3.1E-05	33.668	9.6E-05	-12.2508	3.7E-06	-150.26
4131	1	Extremo 1A	-3.1E-05	49.293	9.6E-05	-12.2508	-4.4E-05	-171
4131	0	Extremo 2A	-3.1E-05	18.043	9.6E-05	-12.2508	5.2E-05	-137.333
4131	0.5	Extremo 2A	-3.1E-05	33.668	9.6E-05	-12.2508	3.7E-06	-150.26
4131	1	Extremo 2A	-3.1E-05	49.293	9.6E-05	-12.2508	-4.4E-05	-171
4132	0	Extremo 1A	-5.3E-05	-0.263	0.0001	0.0921	4.7E-05	-165.335
4132	0.5	Extremo 1A	-5.3E-05	15.362	0.0001	0.0921	-4.4E-06	-169.11
4132	1	Extremo 1A	-5.3E-05	30.987	0.0001	0.0921	-5.6E-05	-180.698
4132	0	Extremo 2A	-5.3E-05	-0.263	0.0001	0.0921	4.7E-05	-165.335
4132	0.5	Extremo 2A	-5.3E-05	15.362	0.0001	0.0921	-4.4E-06	-169.11
4132	1	Extremo 2A	-5.3E-05	30.987	0.0001	0.0921	-5.6E-05	-180.698
4133	0	Extremo 1A	-7.3E-05	-13.245	6.8E-05	-11.9388	1.9E-05	-162.137
4133	0.5	Extremo 1A	-7.3E-05	2.38	6.8E-05	-11.9388	-1.4E-05	-159.421
4133	1	Extremo 1A	-7.3E-05	18.005	6.8E-05	-11.9388	-4.8E-05	-164.517
4133	0	Extremo 2A	-7.3E-05	-13.245	6.8E-05	-11.9388	1.9E-05	-162.137
4133	0.5	Extremo 2A	-7.3E-05	2.38	6.8E-05	-11.9388	-1.4E-05	-159.421
4133	1	Extremo 2A	-7.3E-05	18.005	6.8E-05	-11.9388	-4.8E-05	-164.518
4134	0	Extremo 1A	-8.2E-05	-15.58	1.1E-06	-42.2035	-1.9E-05	-165.467
4134	0.5	Extremo 1A	-8.2E-05	0.045	1.1E-06	-42.2035	-1.9E-05	-161.583
4134	1	Extremo 1A	-8.2E-05	15.67	1.1E-06	-42.2035	-2E-05	-165.512
4134	0	Extremo 2A	-8.2E-05	-15.58	1.1E-06	-42.2034	-1.9E-05	-165.467
4134	0.5	Extremo 2A	-8.2E-05	0.045	1.1E-06	-42.2034	-1.9E-05	-161.583
4134	1	Extremo 2A	-8.2E-05	15.67	1.1E-06	-42.2034	-2E-05	-165.512
4135	0	Extremo 1A	-7.5E-05	-34.767	-6.9E-05	-55.0904	-5.1E-05	-186.973
4135	0.5	Extremo 1A	-7.5E-05	-19.142	-6.9E-05	-55.0904	-1.7E-05	-173.496
4135	1	Extremo 1A	-7.5E-05	-3.517	-6.9E-05	-55.0904	1.8E-05	-167.832
4135	0	Extremo 2A	-7.5E-05	-34.767	-6.9E-05	-55.0903	-5.1E-05	-186.973
4135	0.5	Extremo 2A	-7.5E-05	-19.142	-6.9E-05	-55.0903	-1.7E-05	-173.496
4135	1	Extremo 2A	-7.5E-05	-3.517	-6.9E-05	-55.0903	1.8E-05	-167.832
4136	0	Extremo 1A	-5.4E-05	-65.67	-0.00011	-47.4004	-6.7E-05	-178.168
4136	0.5	Extremo 1A	-5.4E-05	-50.045	-0.00011	-47.4004	-1.2E-05	-149.239
4136	1	Extremo 1A	-5.4E-05	-34.42	-0.00011	-47.4004	4.2E-05	-128.123
4136	0	Extremo 2A	-5.4E-05	-65.67	-0.00011	-47.4003	-6.7E-05	-178.168
4136	0.5	Extremo 2A	-5.4E-05	-50.045	-0.00011	-47.4003	-1.2E-05	-149.239
4136	1	Extremo 2A	-5.4E-05	-34.42	-0.00011	-47.4003	4.2E-05	-128.123
4137	0	Extremo 1A	-2.5E-05	22.815	7.6E-05	-9.4321	4E-05	-124.668
4137	0.5	Extremo 1A	-2.5E-05	38.44	7.6E-05	-9.4321	2.7E-06	-139.982
4137	1	Extremo 1A	-2.5E-05	54.065	7.6E-05	-9.4321	-3.5E-05	-163.108
4137	0	Extremo 2A	-2.5E-05	22.815	7.6E-05	-9.4321	4E-05	-124.668
4137	0.5	Extremo 2A	-2.5E-05	38.44	7.6E-05	-9.4321	2.7E-06	-139.982
4137	1	Extremo 2A	-2.5E-05	54.065	7.6E-05	-9.4321	-3.5E-05	-163.108
4138	0	Extremo 1A	-4.2E-05	9.612	8E-05	-11.0184	3.6E-05	-161.42
4138	0.5	Extremo 1A	-4.2E-05	25.237	8E-05	-11.0184	-3.7E-06	-170.132
4138	1	Extremo 1A	-4.2E-05	40.862	8E-05	-11.0184	-4.4E-05	-186.657
4138	0	Extremo 2A	-4.2E-05	9.612	8E-05	-11.0184	3.6E-05	-161.42
4138	0.5	Extremo 2A	-4.2E-05	25.237	8E-05	-11.0184	-3.7E-06	-170.132
4138	1	Extremo 2A	-4.2E-05	40.862	8E-05	-11.0184	-4.4E-05	-186.657
4139	0	Extremo 1A	-5.7E-05	-8.084	5.2E-05	-18.0771	1.4E-05	-182.751
4139	0.5	Extremo 1A	-5.7E-05	7.541	5.2E-05	-18.0771	-1.1E-05	-182.615
4139	1	Extremo 1A	-5.7E-05	23.166	5.2E-05	-18.0771	-3.7E-05	-190.292
4139	0	Extremo 2A	-5.7E-05	-8.084	5.2E-05	-18.0771	1.4E-05	-182.751
4139	0.5	Extremo 2A	-5.7E-05	7.541	5.2E-05	-18.0771	-1.1E-05	-182.616
4139	1	Extremo 2A	-5.7E-05	23.166	5.2E-05	-18.0771	-3.7E-05	-190.292
4140	0	Extremo 1A	-6.4E-05	-29.179	-5.9E-07	-29.822	-1.5E-05	-194.849
4140	0.5	Extremo 1A	-6.4E-05	-13.554	-5.9E-07	-29.822	-1.5E-05	-184.166
4140	1	Extremo 1A	-6.4E-05	2.071	-5.9E-07	-29.822	-1.5E-05	-181.296
4140	0	Extremo 2A	-6.4E-05	-29.179	-5.9E-07	-29.822	-1.5E-05	-194.849
4140	0.5	Extremo 2A	-6.4E-05	-13.554	-5.9E-07	-29.822	-1.5E-05	-184.166
4140	1	Extremo 2A	-6.4E-05	2.071	-5.9E-07	-29.822	-1.5E-05	-181.296
4141	0	Extremo 1A	-5.9E-05	-51.612	-5.5E-05	-36.3556	-4.1E-05	-194.528
4141	0.5	Extremo 1A	-5.9E-05	-35.987	-5.5E-05	-36.3556	-1.3E-05	-172.628
4141	1	Extremo 1A	-5.9E-05	-20.362	-5.5E-05	-36.3556	1.5E-05	-158.541
4141	0	Extremo 2A	-5.9E-05	-51.612	-5.5E-05	-36.3556	-4.1E-05	-194.528

4141	0.5	Extremo 2A	-5.9E-05	-35.987	-5.5E-05	-36.3556	-1.3E-05	-172.628
4141	1	Extremo 2A	-5.9E-05	-20.362	-5.5E-05	-36.3556	1.5E-05	-158.541
4142	0	Extremo 1A	-4.2E-05	-72.203	-8.6E-05	-39.828	-5.3E-05	-169.8
4142	0.5	Extremo 1A	-4.2E-05	-56.578	-8.6E-05	-39.828	-9.5E-06	-137.605
4142	1	Extremo 1A	-4.2E-05	-40.953	-8.6E-05	-39.828	3.3E-05	-113.222
4142	0	Extremo 2A	-4.2E-05	-72.203	-8.6E-05	-39.8279	-5.3E-05	-169.8
4142	0.5	Extremo 2A	-4.2E-05	-56.578	-8.6E-05	-39.8279	-9.5E-06	-137.605
4142	1	Extremo 2A	-4.2E-05	-40.953	-8.6E-05	-39.8279	3.3E-05	-113.222
4143	0	Extremo 1A	-2E-05	25.722	6E-05	-8.4068	3.2E-05	-122.454
4143	0.5	Extremo 1A	-2E-05	41.347	6E-05	-8.4068	1.9E-06	-139.221
4143	1	Extremo 1A	-2E-05	56.972	6E-05	-8.4068	-2.8E-05	-163.801
4143	0	Extremo 2A	-2E-05	25.722	6E-05	-8.4068	3.2E-05	-122.454
4143	0.5	Extremo 2A	-2E-05	41.347	6E-05	-8.4068	1.9E-06	-139.221
4143	1	Extremo 2A	-2E-05	56.972	6E-05	-8.4068	-2.8E-05	-163.801
4144	0	Extremo 1A	-3.4E-05	9.657	6.3E-05	-11.8932	2.8E-05	-165.832
4144	0.5	Extremo 1A	-3.4E-05	25.282	6.3E-05	-11.8932	-3.1E-06	-174.567
4144	1	Extremo 1A	-3.4E-05	40.907	6.3E-05	-11.8932	-3.4E-05	-191.114
4144	0	Extremo 2A	-3.4E-05	9.657	6.3E-05	-11.8932	2.8E-05	-165.832
4144	0.5	Extremo 2A	-3.4E-05	25.282	6.3E-05	-11.8932	-3.1E-06	-174.567
4144	1	Extremo 2A	-3.4E-05	40.907	6.3E-05	-11.8932	-3.4E-05	-191.114
4145	0	Extremo 1A	-4.5E-05	-9.968	4E-05	-15.9486	1.1E-05	-193.868
4145	0.5	Extremo 1A	-4.5E-05	5.657	4E-05	-15.9486	-9.1E-06	-192.79
4145	1	Extremo 1A	-4.5E-05	21.282	4E-05	-15.9486	-2.9E-05	-199.525
4145	0	Extremo 2A	-4.5E-05	-9.968	4E-05	-15.9485	1.1E-05	-193.868
4145	0.5	Extremo 2A	-4.5E-05	5.657	4E-05	-15.9485	-9.1E-06	-192.79
4145	1	Extremo 2A	-4.5E-05	21.282	4E-05	-15.9485	-2.9E-05	-199.525
4146	0	Extremo 1A	-5E-05	-32.871	-1.5E-06	-20.5898	-1.3E-05	-205.932
4146	0.5	Extremo 1A	-5E-05	-17.246	-1.5E-06	-20.5898	-1.2E-05	-193.402
4146	1	Extremo 1A	-5E-05	-1.621	-1.5E-06	-20.5898	-1.1E-05	-188.686
4146	0	Extremo 2A	-5E-05	-32.871	-1.5E-06	-20.5897	-1.3E-05	-205.932
4146	0.5	Extremo 2A	-5E-05	-17.246	-1.5E-06	-20.5897	-1.2E-05	-193.402
4146	1	Extremo 2A	-5E-05	-1.621	-1.5E-06	-20.5897	-1.1E-05	-188.686
4147	0	Extremo 1A	-4.6E-05	-55.416	-4.4E-05	-23.9544	-3.2E-05	-198.598
4147	0.5	Extremo 1A	-4.6E-05	-39.791	-4.4E-05	-23.9544	-1E-05	-174.796
4147	1	Extremo 1A	-4.6E-05	-24.166	-4.4E-05	-23.9544	1.2E-05	-158.807
4147	0	Extremo 2A	-4.6E-05	-55.416	-4.4E-05	-23.9544	-3.2E-05	-198.598
4147	0.5	Extremo 2A	-4.6E-05	-39.791	-4.4E-05	-23.9544	-1E-05	-174.796
4147	1	Extremo 2A	-4.6E-05	-24.166	-4.4E-05	-23.9544	1.2E-05	-158.807
4148	0	Extremo 1A	-3.3E-05	-75.573	-6.7E-05	-28.3285	-4.1E-05	-169.047
4148	0.5	Extremo 1A	-3.3E-05	-59.948	-6.7E-05	-28.3285	-7.3E-06	-135.167
4148	1	Extremo 1A	-3.3E-05	-44.323	-6.7E-05	-28.3285	2.6E-05	-109.099
4148	0	Extremo 2A	-3.3E-05	-75.573	-6.7E-05	-28.3284	-4.1E-05	-169.047
4148	0.5	Extremo 2A	-3.3E-05	-59.948	-6.7E-05	-28.3284	-7.3E-06	-135.167
4148	1	Extremo 2A	-3.3E-05	-44.323	-6.7E-05	-28.3284	2.6E-05	-109.099
4149	0	Extremo 1A	-1.6E-05	26.49	4.7E-05	-5.8917	2.5E-05	-123.221
4149	0.5	Extremo 1A	-1.6E-05	42.115	4.7E-05	-5.8917	1.4E-06	-140.372
4149	1	Extremo 1A	-1.6E-05	57.74	4.7E-05	-5.8917	-2.2E-05	-165.335
4149	0	Extremo 2A	-1.6E-05	26.49	4.7E-05	-5.8917	2.5E-05	-123.221
4149	0.5	Extremo 2A	-1.6E-05	42.115	4.7E-05	-5.8917	1.4E-06	-140.372
4149	1	Extremo 2A	-1.6E-05	57.74	4.7E-05	-5.8917	-2.2E-05	-165.335
4150	0	Extremo 1A	-2.7E-05	8.553	4.9E-05	-8.3368	2.2E-05	-169.706
4150	0.5	Extremo 1A	-2.7E-05	24.178	4.9E-05	-8.3368	-2.6E-06	-177.888
4150	1	Extremo 1A	-2.7E-05	39.803	4.9E-05	-8.3368	-2.7E-05	-193.883
4150	0	Extremo 2A	-2.7E-05	8.553	4.9E-05	-8.3368	2.2E-05	-169.706
4150	0.5	Extremo 2A	-2.7E-05	24.178	4.9E-05	-8.3368	-2.6E-06	-177.888
4150	1	Extremo 2A	-2.7E-05	39.803	4.9E-05	-8.3368	-2.7E-05	-193.883
4151	0	Extremo 1A	-3.6E-05	-11.871	3E-05	-10.3882	8E-06	-199.374
4151	0.5	Extremo 1A	-3.6E-05	3.754	3E-05	-10.3882	-7.2E-06	-197.345
4151	1	Extremo 1A	-3.6E-05	19.379	3E-05	-10.3882	-2.2E-05	-203.128
4151	0	Extremo 2A	-3.6E-05	-11.871	3E-05	-10.3882	8E-06	-199.374
4151	0.5	Extremo 2A	-3.6E-05	3.754	3E-05	-10.3882	-7.2E-06	-197.345
4151	1	Extremo 2A	-3.6E-05	19.379	3E-05	-10.3882	-2.2E-05	-203.128
4152	0	Extremo 1A	-3.9E-05	-34.155	-2E-06	-12.2681	-1E-05	-210.416
4152	0.5	Extremo 1A	-3.9E-05	-18.53	-2E-06	-12.2681	-9.2E-06	-197.245
4152	1	Extremo 1A	-3.9E-05	-2.905	-2E-06	-12.2681	-8.2E-06	-191.886
4152	0	Extremo 2A	-3.9E-05	-34.155	-2E-06	-12.2681	-1E-05	-210.416
4152	0.5	Extremo 2A	-3.9E-05	-18.53	-2E-06	-12.2681	-9.2E-06	-197.245
4152	1	Extremo 2A	-3.9E-05	-2.905	-2E-06	-12.2681	-8.2E-06	-191.886
4153	0	Extremo 1A	-3.6E-05	-56.373	-3.5E-05	-13.8655	-2.5E-05	-200.739
4153	0.5	Extremo 1A	-3.6E-05	-40.748	-3.5E-05	-13.8655	-7.8E-06	-176.459
4153	1	Extremo 1A	-3.6E-05	-25.123	-3.5E-05	-13.8655	9.6E-06	-159.991
4153	0	Extremo 2A	-3.6E-05	-56.373	-3.5E-05	-13.8654	-2.5E-05	-200.739
4153	0.5	Extremo 2A	-3.6E-05	-40.748	-3.5E-05	-13.8654	-7.8E-06	-176.459
4153	1	Extremo 2A	-3.6E-05	-25.123	-3.5E-05	-13.8654	9.6E-06	-159.991
4154	0	Extremo 1A	-2.6E-05	-76.736	-5.3E-05	-16.7388	-3.2E-05	-169.426
4154	0.5	Extremo 1A	-2.6E-05	-61.111	-5.3E-05	-16.7388	-5.6E-06	-134.964
4154	1	Extremo 1A	-2.6E-05	-45.486	-5.3E-05	-16.7388	2.1E-05	-108.315
4154	0	Extremo 2A	-2.6E-05	-76.736	-5.3E-05	-16.7387	-3.2E-05	-169.426
4154	0.5	Extremo 2A	-2.6E-05	-61.111	-5.3E-05	-16.7387	-5.6E-06	-134.964
4154	1	Extremo 2A	-2.6E-05	-45.486	-5.3E-05	-16.7387	2.1E-05	-108.315
4155	0	Extremo 1A	-1.3E-05	26.587	3.7E-05	-2.109	1.9E-05	-123.996
4155	0.5	Extremo 1A	-1.3E-05	42.212	3.7E-05	-2.109	9.6E-07	-141.196
4155	1	Extremo 1A	-1.3E-05	57.837	3.7E-05	-2.109	-1.8E-05	-166.208
4155	0	Extremo 2A	-1.3E-05	26.587	3.7E-05	-2.109	1.9E-05	-123.996
4155	0.5	Extremo 2A	-1.3E-05	42.212	3.7E-05	-2.109	9.6E-07	-141.196
4155	1	Extremo 2A	-1.3E-05	57.837	3.7E-05	-2.109	-1.8E-05	-166.208
4156	0	Extremo 1A	-2.1E-05	7.898	3.8E-05	-2.9403	1.7E-05	-171.631
4156	0.5	Extremo 1A	-2.1E-05	23.523	3.8E-05	-2.9403	-2.1E-06	-179.486
4156	1	Extremo 1A	-2.1E-05	39.148	3.8E-05	-2.9403	-2.1E-05	-195.154
4156	0	Extremo 2A	-2.1E-05	7.898	3.8E-05	-2.9403	1.7E-05	-171.631
4156	0.5	Extremo 2A	-2.1E-05	23.523	3.8E-05	-2.9403	-2.1E-06	-179.486
4156	1	Extremo 2A	-2.1E-05	39.148	3.8E-05	-2.9403	-2.1E-05	-195.154
4157	0	Extremo 1A	-2.8E-05	-12.783	2.3E-05	-3.5581	6E-06	-201.622
4157	0.5	Extremo 1A	-2.8E-05	2.842	2.3E-05	-3.5581	-5.7E-06	-199.137
4157	1	Extremo 1A	-2.8E-05	18.467	2.3E-05	-3.5581	-1.7E-05	-204.464
4157	0	Extremo 2A	-2.8E-05	-12.783	2.3E-05	-3.5581	6E-06	-201.622
4157	0.5	Extremo 2A	-2.8E-05	2.842	2.3E-05	-3.5581	-5.7E-06	-199.137
4157	1	Extremo 2A	-2.8E-05	18.467	2.3E-05	-3.5581	-1.7E-05	-204.464
4158	0	Extremo 1A	-3.1E-05	-34.662	-2.1E-06	-4.0736	-8.3E-06	-212.104
4158	0.5	Extremo 1A	-3.1E-05	-19.037	-2.1E-06	-4.0736	-7.2E-06	-198.679
4158	1	Extremo 1A	-3.1E-05	-3.412	-2.1E-06	-4.0736	-6.1E-06	-193.067
4158	0	Extremo 2A	-3.1E-05	-34.662	-2.1E-06	-4.0736	-8.3E-06	-212.104
4158	0.5	Extremo 2A	-3.1E-05	-19.037	-2.1E-06	-4.0736	-7.2E-06	-198.679
4158	1	Extremo 2A	-3.1E-05	-3.412	-2.1E-06	-4.0736	-6.1E-06	-193.067
4159	0	Extremo 1A	-2.8E-05	-56.653	-2.8E-05	-4.5359	-2E-05	-201.646
4159	0.5	Extremo 1A	-2.8E-05	-41.028	-2.8E-05	-4.5359	-6E-06	-177.226
4159	1	Extremo 1A	-2.8E-05	-25.403	-2.8E-05	-4.5359	7.8E-06	-160.619
4159	0	Extremo 2A	-2.8E-05	-56.653	-2.8E-05	-4.5358	-2E-05	-201.646
4159	0.5	Extremo 2A	-2.8E-05	-41.028	-2.8E-05	-4.5358	-6E-06	-177.226
4159	1	Extremo 2A	-2.8E-05	-25.403	-2.8E-05	-4.5358	7.8E-06	-160.619
4160	0	Extremo 1A	-2E-05	-77.076	-4.1E-05	-5.4684	-2.5E-05	-169.704
4160	0.5	Extremo 1A	-2E-05	-61.451	-4.1E-05	-5.4684	-4.3E-06	-135.072
4160	1	Extremo 1A	-2E-05	-45.826	-4.1E-05	-5.4684	1.6E-05	-108.252
4160	0	Extremo 2A	-2E-05	-77.076	-4.1E-05	-5.4682	-2.5E-05	-169.704
4160	0.5	Extremo 2A	-2E-05	-61.451	-4.1E-05	-5.4682	-4.3E-06	-135.072
4160	1	Extremo 2A	-2E-05	-45.826	-4.1E-05	-5.4682	1.6E-05	-108.252
4161	0	Extremo 1A	-1E-05	26.586	2.9E-05	2.1032	1.5E-05	-123.992
4161	0.5	Extremo 1A	-1E-05	42.211	2.9E-05	2.1032	6.8E-07	-141.191
4161	1	Extremo 1A	-1E-05	57.836	2.9E-05	2.1032	-1.4E-05	-166.203
4161	0	Extremo 2A	-1E-05	26.586	2.9E-05	2.1032	1.5E-05	-123.992
4161	0.5	Extremo 2A	-1E-05	42.211	2.9E-05	2.1032	6.8E-07	-141.191
4161	1	Extremo 2A	-1E-05	57.836	2.9E-05	2.1032	-1.4E-05	-166.203
4162	0	Extremo 1A	-1.7E-05	7.899	3E-05	2.9582	1.3E-05	-171.621
4162	0.5	Extremo 1A	-1.7E-05	23.524	3E-05	2.9582	-1.7E-06	-179.477
4162	1	Extremo 1A	-1.7E-05	39.149	3E-05	2.9582	-1.7E-05	-195.145
4162	0	Extremo 2A	-1.7E-05	7.899	3E-05	2.9582	1.3E-05	-171.621
4162	0.5	Extremo 2A	-1.7E-05	23.524	3E-05	2.9582	-1.7E-06	-179.477
4162	1	Extremo 2A	-1.7E-05	39.149	3E-05	2.9582	-1.7E-05	-195.145
4163	0	Extremo 1A	-2.2E-05	-12.781	1.8E-05	3.5929	4.4E-06	-201.609
4163	0.5	Extremo 1A	-2.2E-05	2.844	1.8E-05	3.5929	-4.5E-06	-199.125
4163	1	Extremo 1A	-2.2E-05	18.469	1.8E-05	3.5929	-1.3E-05	-204.453
4163	0	Extremo 2A	-2.2E-05	-12.781	1.8E-05	3.5929	4.4E-06	-201.609
4163	0.5	Extremo 2A	-2.2E-05	2.844	1.8E-05	3.5929	-4.5E-06	-199.125
4163	1	Extremo 2A	-2.2E-05	18.469	1.8E-05	3.5929	-1.3E-05	-204.453
4164	0	Extremo 1A	-2.4E-05	-34.661	-2.1E-06	4.1276	-6.7E-06	-212.092
4164	0.5	Extremo 1A	-2.4E-05	-19.036	-2.1E-06	4.1276	-5.6E-06	-198.667
4164	1	Extremo 1A	-2.4E-05	-3.411	-2.1E-06	4.1276	-4.6E-06	-193.055
4164	0	Extremo 2A	-2.4E-05	-34.661	-2.1E-06	4.1276	-6.7E-06	-212.092
4164	0.5	Extremo 2A	-2.4E-05	-19.036	-2.1E-06	4.1276	-5.6E-06	-198.667
4164	1	Extremo 2A	-2.4E-05	-3.411	-2.1E-06	4.1276	-4.6E-06	-193.055
4165	0	Extremo 1A	-2.2E-05	-56.653	-2.2E-05	4.6231	-1.6E-05	-201.637
4165	0.5	Extremo 1A	-2.2E-05	-41.028	-2.2E-05	4.6231	-4.6E-06	-177.217
4165	1	Extremo 1A	-2.2E-05	-25.403	-2.2E-05	4.6231	6.3E-06	-160.609
4165	0	Extremo 2A	-2.2E-05	-56.653	-2.2E-05	4.6232	-1.6E-05	-201.637

4165	0.5	Extremo 2A	-2.2E-05	-41.028	-2.2E-05	4.6232	-4.6E-06	-177.217
4165	1	Extremo 2A	-2.2E-05	-25.403	-2.2E-05	4.6232	6.3E-06	-160.609
4166	0	Extremo 1A	-1.5E-05	-77.074	-3.2E-05	5.6818	-1.9E-05	-169.698
4166	0.5	Extremo 1A	-1.5E-05	-61.449	-3.2E-05	5.6818	-3.3E-06	-135.067
4166	1	Extremo 1A	-1.5E-05	-45.824	-3.2E-05	5.6818	1.3E-05	-108.248
4166	0	Extremo 2A	-1.5E-05	-77.074	-3.2E-05	5.6819	-1.9E-05	-169.698
4166	0.5	Extremo 2A	-1.5E-05	-61.449	-3.2E-05	5.6819	-3.3E-06	-135.067
4166	1	Extremo 2A	-1.5E-05	-45.824	-3.2E-05	5.6819	1.3E-05	-108.248
4167	0	Extremo 1A	-8.1E-06	26.486	2.3E-05	5.8773	1.2E-05	-123.208
4167	0.5	Extremo 1A	-8.1E-06	42.111	2.3E-05	5.8773	4.8E-07	-140.358
4167	1	Extremo 1A	-8.1E-06	57.736	2.3E-05	5.8773	-1.1E-05	-165.319
4167	0	Extremo 2A	-8.1E-06	26.486	2.3E-05	5.8772	1.2E-05	-123.208
4167	0.5	Extremo 2A	-8.1E-06	42.111	2.3E-05	5.8772	4.8E-07	-140.358
4167	1	Extremo 2A	-8.1E-06	57.736	2.3E-05	5.8772	-1.1E-05	-165.319
4168	0	Extremo 1A	-1.3E-05	8.557	2.3E-05	8.3452	1E-05	-169.674
4168	0.5	Extremo 1A	-1.3E-05	24.182	2.3E-05	8.3452	-1.4E-06	-177.859
4168	1	Extremo 1A	-1.3E-05	39.807	2.3E-05	8.3452	-1.3E-05	-193.856
4168	0	Extremo 2A	-1.3E-05	8.557	2.3E-05	8.3452	1E-05	-169.674
4168	0.5	Extremo 2A	-1.3E-05	24.182	2.3E-05	8.3452	-1.4E-06	-177.859
4168	1	Extremo 2A	-1.3E-05	39.807	2.3E-05	8.3452	-1.3E-05	-193.856
4169	0	Extremo 1A	-1.7E-05	-11.865	1.4E-05	10.4172	3.3E-06	-199.333
4169	0.5	Extremo 1A	-1.7E-05	3.76	1.4E-05	10.4172	-3.6E-06	-197.307
4169	1	Extremo 1A	-1.7E-05	19.385	1.4E-05	10.4172	-1E-05	-203.093
4169	0	Extremo 2A	-1.7E-05	-11.865	1.4E-05	10.4172	3.3E-06	-199.333
4169	0.5	Extremo 2A	-1.7E-05	3.76	1.4E-05	10.4172	-3.6E-06	-197.307
4169	1	Extremo 2A	-1.7E-05	19.385	1.4E-05	10.4172	-1E-05	-203.093
4170	0	Extremo 1A	-1.9E-05	-34.155	-2E-06	12.3228	-5.4E-06	-210.376
4170	0.5	Extremo 1A	-1.9E-05	-18.53	-2E-06	12.3228	-4.4E-06	-197.205
4170	1	Extremo 1A	-1.9E-05	-2.905	-2E-06	12.3228	-3.4E-06	-191.846
4170	0	Extremo 2A	-1.9E-05	-34.155	-2E-06	12.3229	-5.4E-06	-210.376
4170	0.5	Extremo 2A	-1.9E-05	-18.53	-2E-06	12.3229	-4.4E-06	-197.205
4170	1	Extremo 2A	-1.9E-05	-2.905	-2E-06	12.3229	-3.4E-06	-191.846
4171	0	Extremo 1A	-1.7E-05	-56.374	-1.7E-05	13.9593	-1.2E-05	-200.707
4171	0.5	Extremo 1A	-1.7E-05	-40.749	-1.7E-05	13.9593	-3.6E-06	-176.426
4171	1	Extremo 1A	-1.7E-05	-25.124	-1.7E-05	13.9593	5.1E-06	-159.958
4171	0	Extremo 2A	-1.7E-05	-56.374	-1.7E-05	13.9594	-1.2E-05	-200.707
4171	0.5	Extremo 2A	-1.7E-05	-40.749	-1.7E-05	13.9594	-3.6E-06	-176.426
4171	1	Extremo 2A	-1.7E-05	-25.124	-1.7E-05	13.9594	5.1E-06	-159.958
4172	0	Extremo 1A	-1.2E-05	-76.73	-2.5E-05	16.9602	-1.5E-05	-169.407
4172	0.5	Extremo 1A	-1.2E-05	-61.105	-2.5E-05	16.9602	-2.5E-06	-134.948
4172	1	Extremo 1A	-1.2E-05	-45.48	-2.5E-05	16.9602	1E-05	-108.302
4172	0	Extremo 2A	-1.2E-05	-76.73	-2.5E-05	16.9603	-1.5E-05	-169.407
4172	0.5	Extremo 2A	-1.2E-05	-61.105	-2.5E-05	16.9603	-2.5E-06	-134.948
4172	1	Extremo 2A	-1.2E-05	-45.48	-2.5E-05	16.9603	1E-05	-108.302
4173	0	Extremo 1A	-6.4E-06	25.709	1.8E-05	8.3744	9.4E-06	-122.444
4173	0.5	Extremo 1A	-6.4E-06	41.334	1.8E-05	8.3744	3.3E-07	-139.205
4173	1	Extremo 1A	-6.4E-06	56.959	1.8E-05	8.3744	-8.7E-06	-163.778
4173	0	Extremo 2A	-6.4E-06	25.709	1.8E-05	8.3743	9.4E-06	-122.444
4173	0.5	Extremo 2A	-6.4E-06	41.334	1.8E-05	8.3743	3.3E-07	-139.205
4173	1	Extremo 2A	-6.4E-06	56.959	1.8E-05	8.3743	-8.7E-06	-163.778
4174	0	Extremo 1A	-1.1E-05	9.662	1.8E-05	11.8767	7.9E-06	-165.777
4174	0.5	Extremo 1A	-1.1E-05	25.287	1.8E-05	11.8767	-1.2E-06	-174.514
4174	1	Extremo 1A	-1.1E-05	40.912	1.8E-05	11.8767	-1E-05	-191.064
4174	0	Extremo 2A	-1.1E-05	9.662	1.8E-05	11.8766	7.9E-06	-165.777
4174	0.5	Extremo 2A	-1.1E-05	25.287	1.8E-05	11.8766	-1.2E-06	-174.514
4174	1	Extremo 2A	-1.1E-05	40.912	1.8E-05	11.8766	-1E-05	-191.064
4175	0	Extremo 1A	-1.4E-05	-9.959	1.1E-05	15.9612	2.5E-06	-193.783
4175	0.5	Extremo 1A	-1.4E-05	5.666	1.1E-05	15.9612	-2.8E-06	-192.709
4175	1	Extremo 1A	-1.4E-05	21.291	1.1E-05	15.9612	-8.1E-06	-199.448
4175	0	Extremo 2A	-1.4E-05	-9.959	1.1E-05	15.9612	2.5E-06	-193.782
4175	0.5	Extremo 2A	-1.4E-05	5.666	1.1E-05	15.9612	-2.8E-06	-192.709
4175	1	Extremo 2A	-1.4E-05	21.291	1.1E-05	15.9612	-8.1E-06	-199.448
4176	0	Extremo 1A	-1.5E-05	-32.873	-1.8E-06	20.6487	-4.3E-06	-205.846
4176	0.5	Extremo 1A	-1.5E-05	-17.248	-1.8E-06	20.6487	-3.4E-06	-193.315
4176	1	Extremo 1A	-1.5E-05	-1.623	-1.8E-06	20.6487	-2.5E-06	-188.597
4176	0	Extremo 2A	-1.5E-05	-32.873	-1.8E-06	20.6488	-4.3E-06	-205.846
4176	0.5	Extremo 2A	-1.5E-05	-17.248	-1.8E-06	20.6488	-3.4E-06	-193.315
4176	1	Extremo 2A	-1.5E-05	-1.623	-1.8E-06	20.6488	-2.5E-06	-188.597
4177	0	Extremo 1A	-1.3E-05	-55.416	-1.4E-05	24.0673	-9.7E-06	-198.532
4177	0.5	Extremo 1A	-1.3E-05	-39.791	-1.4E-05	24.0673	-2.8E-06	-174.731
4177	1	Extremo 1A	-1.3E-05	-24.166	-1.4E-05	24.0673	4.1E-06	-158.741
4177	0	Extremo 2A	-1.3E-05	-55.416	-1.4E-05	24.0673	-9.7E-06	-198.532
4177	0.5	Extremo 2A	-1.3E-05	-39.791	-1.4E-05	24.0673	-2.8E-06	-174.73
4177	1	Extremo 2A	-1.3E-05	-24.166	-1.4E-05	24.0673	4.1E-06	-158.741
4178	0	Extremo 1A	-9.4E-06	-75.556	-2E-05	28.568	-1.2E-05	-169.013
4178	0.5	Extremo 1A	-9.4E-06	-59.931	-2E-05	28.568	-1.9E-06	-135.141
4178	1	Extremo 1A	-9.4E-06	-44.306	-2E-05	28.568	8E-06	-109.082
4178	0	Extremo 2A	-9.4E-06	-75.556	-2E-05	28.5681	-1.2E-05	-169.013
4178	0.5	Extremo 2A	-9.4E-06	-59.931	-2E-05	28.5681	-1.9E-06	-135.141
4178	1	Extremo 2A	-9.4E-06	-44.306	-2E-05	28.5681	8E-06	-109.082
4179	0	Extremo 1A	-5.1E-06	22.77	1.4E-05	9.3779	7.4E-06	-124.701
4179	0.5	Extremo 1A	-5.1E-06	38.395	1.4E-05	9.3779	2.3E-07	-139.992
4179	1	Extremo 1A	-5.1E-06	54.02	1.4E-05	9.3779	-6.9E-06	-163.096
4179	0	Extremo 2A	-5.1E-06	22.77	1.4E-05	9.3779	7.4E-06	-124.701
4179	0.5	Extremo 2A	-5.1E-06	38.395	1.4E-05	9.3779	2.3E-07	-139.992
4179	1	Extremo 2A	-5.1E-06	54.02	1.4E-05	9.3779	-6.9E-06	-163.096
4180	0	Extremo 1A	-8.3E-06	9.598	1.4E-05	10.9448	6.1E-06	-161.358
4180	0.5	Extremo 1A	-8.3E-06	25.223	1.4E-05	10.9448	-9.4E-07	-170.063
4180	1	Extremo 1A	-8.3E-06	40.848	1.4E-05	10.9448	-8E-06	-186.581
4180	0	Extremo 2A	-8.3E-06	9.598	1.4E-05	10.9447	6.1E-06	-161.358
4180	0.5	Extremo 2A	-8.3E-06	25.223	1.4E-05	10.9447	-9.4E-07	-170.063
4180	1	Extremo 2A	-8.3E-06	40.848	1.4E-05	10.9447	-8E-06	-186.581
4181	0	Extremo 1A	-1.1E-05	-8.088	8.1E-06	18.0477	1.8E-06	-182.59
4181	0.5	Extremo 1A	-1.1E-05	7.537	8.1E-06	18.0477	-2.2E-06	-182.452
4181	1	Extremo 1A	-1.1E-05	23.162	8.1E-06	18.0477	-6.3E-06	-190.127
4181	0	Extremo 2A	-1.1E-05	-8.088	8.1E-06	18.0476	1.8E-06	-182.589
4181	0.5	Extremo 2A	-1.1E-05	7.537	8.1E-06	18.0476	-2.2E-06	-182.452
4181	1	Extremo 2A	-1.1E-05	23.162	8.1E-06	18.0476	-6.3E-06	-190.126
4182	0	Extremo 1A	-1.2E-05	-29.177	-1.6E-06	29.8988	-3.5E-06	-194.666
4182	0.5	Extremo 1A	-1.2E-05	-13.552	-1.6E-06	29.8988	-2.7E-06	-183.983
4182	1	Extremo 1A	-1.2E-05	2.073	-1.6E-06	29.8988	-1.9E-06	-181.113
4182	0	Extremo 2A	-1.2E-05	-29.177	-1.6E-06	29.8988	-3.5E-06	-194.666
4182	0.5	Extremo 2A	-1.2E-05	-13.552	-1.6E-06	29.8988	-2.7E-06	-183.983
4182	1	Extremo 2A	-1.2E-05	2.073	-1.6E-06	29.8988	-1.9E-06	-181.113
4183	0	Extremo 1A	-1E-05	-51.595	-1.1E-05	36.5171	-7.6E-06	-194.408
4183	0.5	Extremo 1A	-1E-05	-35.97	-1.1E-05	36.5171	-2.2E-06	-172.517
4183	1	Extremo 1A	-1E-05	-20.345	-1.1E-05	36.5171	3.3E-06	-158.438
4183	0	Extremo 2A	-1E-05	-51.595	-1.1E-05	36.5172	-7.6E-06	-194.408
4183	0.5	Extremo 2A	-1E-05	-35.97	-1.1E-05	36.5172	-2.2E-06	-172.517
4183	1	Extremo 2A	-1E-05	-20.345	-1.1E-05	36.5172	3.3E-06	-158.438
4184	0	Extremo 1A	-7.3E-06	-72.157	-1.6E-05	40.0962	-9.3E-06	-169.754
4184	0.5	Extremo 1A	-7.3E-06	-56.532	-1.6E-05	40.0962	-1.5E-06	-137.581
4184	1	Extremo 1A	-7.3E-06	-40.907	-1.6E-05	40.0962	6.3E-06	-113.222
4184	0	Extremo 2A	-7.3E-06	-72.157	-1.6E-05	40.0964	-9.3E-06	-169.754
4184	0.5	Extremo 2A	-7.3E-06	-56.532	-1.6E-05	40.0964	-1.5E-06	-137.581
4184	1	Extremo 2A	-7.3E-06	-40.907	-1.6E-05	40.0964	6.3E-06	-113.222
4185	0	Extremo 1A	-4.1E-06	17.951	1.1E-05	12.2115	5.8E-06	-137.519
4185	0.5	Extremo 1A	-4.1E-06	33.576	1.1E-05	12.2115	1.6E-07	-150.401
4185	1	Extremo 1A	-4.1E-06	49.201	1.1E-05	12.2115	-5.5E-06	-171.095
4185	0	Extremo 2A	-4.1E-06	17.951	1.1E-05	12.2115	5.8E-06	-137.519
4185	0.5	Extremo 2A	-4.1E-06	33.576	1.1E-05	12.2115	1.6E-07	-150.401
4185	1	Extremo 2A	-4.1E-06	49.201	1.1E-05	12.2115	-5.5E-06	-171.095
4186	0	Extremo 1A	-6.6E-06	-0.397	1.1E-05	-0.2989	4.8E-06	-165.37
4186	0.5	Extremo 1A	-6.6E-06	15.228	1.1E-05	-0.2989	-7.6E-07	-169.078
4186	1	Extremo 1A	-6.6E-06	30.853	1.1E-05	-0.2989	-6.3E-06	-180.598
4186	0	Extremo 2A	-6.6E-06	-0.397	1.1E-05	-0.299	4.8E-06	-165.37
4186	0.5	Extremo 2A	-6.6E-06	15.228	1.1E-05	-0.299	-7.6E-07	-169.078
4186	1	Extremo 2A	-6.6E-06	30.853	1.1E-05	-0.299	-6.3E-06	-180.598
4187	0	Extremo 1A	-8.5E-06	-13.351	6.2E-06	11.8057	1.4E-06	-161.841
4187	0.5	Extremo 1A	-8.5E-06	2.274	6.2E-06	11.8057	-1.8E-06	-159.071
4187	1	Extremo 1A	-8.5E-06	17.899	6.2E-06	11.8057	-4.9E-06	-164.114
4187	0	Extremo 2A	-8.5E-06	-13.352	6.2E-06	11.8056	1.4E-06	-161.84
4187	0.5	Extremo 2A	-8.5E-06	2.273	6.2E-06	11.8056	-1.8E-06	-159.071
4187	1	Extremo 2A	-8.5E-06	17.898	6.2E-06	11.8056	-4.9E-06	-164.114
4188	0	Extremo 1A	-9.1E-06	-15.515	-1.4E-06	42.3383	-2.8E-06	-165.032
4188	0.5	Extremo 1A	-9.1E-06	0.11	-1.4E-06	42.3383	-2.1E-06	-161.181
4188	1	Extremo 1A	-9.1E-06	15.735	-1.4E-06	42.3383	-1.4E-06	-165.142
4188	0	Extremo 2A	-9.1E-06	-15.515	-1.4E-06	42.3384	-2.8E-06	-165.032
4188	0.5	Extremo 2A	-9.1E-06	0.11	-1.4E-06	42.3384	-2.1E-06	-161.181
4188	1	Extremo 2A	-9.1E-06	15.735	-1.4E-06	42.3384	-1.4E-06	-165.142
4189	0	Extremo 1A	-8.1E-06	-34.632	-8.6E-06	55.3721	-6E-06	-186.758
4189	0.5	Extremo 1A	-8.1E-06	-19.007	-8.6E-06	55.3721	-1.7E-06	-173.349
4189	1	Extremo 1A	-8.1E-06	-3.382	-8.6E-06	55.3721	2.6E-06	-167.752
4189	0	Extremo 2A	-8.1E-06	-34.631	-8.6E-06	55.3723	-6E-06	-186.758

4189	0.5	Extremo 2A	-8.1E-06	-19.006	-8.6E-06	55.3723	-1.7E-06	-173.349
4189	1	Extremo 2A	-8.1E-06	-3.381	-8.6E-06	55.3723	2.6E-06	-167.752
4190	0	Extremo 1A	-5.7E-06	-65.566	-1.2E-05	47.6823	-7.2E-06	-178.162
4190	0.5	Extremo 1A	-5.7E-06	-49.941	-1.2E-05	47.6823	-1.1E-06	-149.285
4190	1	Extremo 1A	-5.7E-06	-34.316	-1.2E-05	47.6823	5E-06	-128.221
4190	0	Extremo 2A	-5.7E-06	-65.566	-1.2E-05	47.6825	-7.2E-06	-178.162
4190	0.5	Extremo 2A	-5.7E-06	-49.941	-1.2E-05	47.6825	-1.1E-06	-149.285
4190	1	Extremo 2A	-5.7E-06	-34.316	-1.2E-05	47.6825	5E-06	-128.221
4191	0	Extremo 1A	-3.2E-06	37.381	8.9E-06	30.8585	4.5E-06	-168.325
4191	0.5	Extremo 1A	-3.2E-06	53.006	8.9E-06	30.8585	1.1E-07	-190.922
4191	1	Extremo 1A	-3.2E-06	68.631	8.9E-06	30.8585	-4.3E-06	-221.331
4191	0	Extremo 2A	-3.2E-06	37.381	8.9E-06	30.8586	4.5E-06	-168.325
4191	0.5	Extremo 2A	-3.2E-06	53.006	8.9E-06	30.8586	1.1E-07	-190.922
4191	1	Extremo 2A	-3.2E-06	68.631	8.9E-06	30.8586	-4.3E-06	-221.332
4192	0	Extremo 1A	-5.2E-06	-61.564	8.6E-06	-33.9694	3.7E-06	-215.019
4192	0.5	Extremo 1A	-5.2E-06	-45.939	8.6E-06	-33.9694	-6.1E-07	-188.143
4192	1	Extremo 1A	-5.2E-06	-30.314	8.6E-06	-33.9694	-4.9E-06	-169.08
4192	0	Extremo 2A	-5.2E-06	-61.564	8.6E-06	-33.9699	3.7E-06	-215.019
4192	0.5	Extremo 2A	-5.2E-06	-45.939	8.6E-06	-33.9699	-6.1E-07	-188.143
4192	1	Extremo 2A	-5.2E-06	-30.314	8.6E-06	-33.9699	-4.9E-06	-169.08
4193	0	Extremo 1A	-6.7E-06	-50.609	4.8E-06	-9.2557	1E-06	-126.819
4193	0.5	Extremo 1A	-6.7E-06	-34.984	4.8E-06	-9.2557	-1.4E-06	-105.421
4193	1	Extremo 1A	-6.7E-06	-19.359	4.8E-06	-9.2557	-3.8E-06	-91.8347
4193	0	Extremo 2A	-6.7E-06	-50.61	4.8E-06	-9.256	1E-06	-126.819
4193	0.5	Extremo 2A	-6.7E-06	-34.985	4.8E-06	-9.256	-1.4E-06	-105.42
4193	1	Extremo 2A	-6.7E-06	-19.36	4.8E-06	-9.256	-3.8E-06	-91.8339
4194	0	Extremo 1A	-7.2E-06	32.052	-1.2E-06	59.9985	-2.2E-06	-86.6026
4194	0.5	Extremo 1A	-7.2E-06	47.677	-1.2E-06	59.9985	-1.6E-06	-106.535
4194	1	Extremo 1A	-7.2E-06	63.302	-1.2E-06	59.9985	-1.1E-06	-134.279
4194	0	Extremo 2A	-7.2E-06	32.052	-1.2E-06	59.9987	-2.2E-06	-86.6017
4194	0.5	Extremo 2A	-7.2E-06	47.677	-1.2E-06	59.9987	-1.6E-06	-106.534
4194	1	Extremo 2A	-7.2E-06	63.302	-1.2E-06	59.9987	-1.1E-06	-134.279
4195	0	Extremo 1A	-6.3E-06	39.734	-6.8E-06	88.8896	-4.7E-06	-167.647
4195	0.5	Extremo 1A	-6.3E-06	55.359	-6.8E-06	88.8896	-1.3E-06	-191.42
4195	1	Extremo 1A	-6.3E-06	70.984	-6.8E-06	88.8896	2.1E-06	-223.006
4195	0	Extremo 2A	-6.3E-06	39.735	-6.8E-06	88.89	-4.7E-06	-167.647
4195	0.5	Extremo 2A	-6.3E-06	55.36	-6.8E-06	88.89	-1.3E-06	-191.42
4195	1	Extremo 2A	-6.3E-06	70.985	-6.8E-06	88.89	2.1E-06	-223.007
4196	0	Extremo 1A	-4.4E-06	-73.652	-9.6E-06	35.6684	-5.7E-06	-223.679
4196	0.5	Extremo 1A	-4.4E-06	-58.027	-9.6E-06	35.6684	-8.8E-07	-190.76
4196	1	Extremo 1A	-4.4E-06	-42.402	-9.6E-06	35.6684	3.9E-06	-165.653
4196	0	Extremo 2A	-4.4E-06	-73.652	-9.6E-06	35.6685	-5.7E-06	-223.68
4196	0.5	Extremo 2A	-4.4E-06	-58.027	-9.6E-06	35.6685	-8.8E-07	-190.76
4196	1	Extremo 2A	-4.4E-06	-42.402	-9.6E-06	35.6685	3.9E-06	-165.653
4197	0	Extremo 1A	-2.6E-06	234.743	7E-06	82.5155	3.6E-06	-176.146
4197	0.5	Extremo 1A	-2.6E-06	250.368	7E-06	82.5155	7.1E-08	-297.424
4197	1	Extremo 1A	-2.6E-06	265.993	7E-06	82.5155	-3.4E-06	-426.514
4197	0	Extremo 2A	-2.6E-06	234.745	7E-06	82.5161	3.6E-06	-176.147
4197	0.5	Extremo 2A	-2.6E-06	250.37	7E-06	82.5161	7.1E-08	-297.425
4197	1	Extremo 2A	-2.6E-06	265.995	7E-06	82.5161	-3.4E-06	-426.516
4198	0	Extremo 1A	-4.1E-06	-335.528	6.8E-06	-94.799	2.9E-06	-426.371
4198	0.5	Extremo 1A	-4.1E-06	-319.903	6.8E-06	-94.799	-4.9E-07	-262.513
4198	1	Extremo 1A	-4.1E-06	-304.278	6.8E-06	-94.799	-3.9E-06	-106.467
4198	0	Extremo 2A	-4.1E-06	-335.531	6.8E-06	-94.7998	2.9E-06	-426.373
4198	0.5	Extremo 2A	-4.1E-06	-319.906	6.8E-06	-94.7998	-4.9E-07	-262.514
4198	1	Extremo 2A	-4.1E-06	-304.281	6.8E-06	-94.7998	-3.9E-06	-106.467
4199	0	Extremo 1A	-5.3E-06	-158.702	3.7E-06	-35.2979	7.6E-07	-70.2486
4199	0.5	Extremo 1A	-5.3E-06	-143.077	3.7E-06	-35.2979	-1.1E-06	5.1964
4199	1	Extremo 1A	-5.3E-06	-127.452	3.7E-06	-35.2979	-2.9E-06	72.8288
4199	0	Extremo 2A	-5.3E-06	-158.704	3.7E-06	-35.2983	7.6E-07	-70.2479
4199	0.5	Extremo 2A	-5.3E-06	-143.079	3.7E-06	-35.2983	-1.1E-06	5.1978
4199	1	Extremo 2A	-5.3E-06	-127.454	3.7E-06	-35.2983	-2.9E-06	72.8309
4200	0	Extremo 1A	-5.6E-06	148.748	-1E-06	67.8635	-1.8E-06	85.7763
4200	0.5	Extremo 1A	-5.6E-06	164.373	-1E-06	67.8635	-1.3E-06	7.4959
4200	1	Extremo 1A	-5.6E-06	179.998	-1E-06	67.8635	-7.9E-07	-78.597
4200	0	Extremo 2A	-5.6E-06	148.749	-1E-06	67.8638	-1.8E-06	85.7784
4200	0.5	Extremo 2A	-5.6E-06	164.374	-1E-06	67.8638	-1.3E-06	7.4975
4200	1	Extremo 2A	-5.6E-06	179.999	-1E-06	67.8638	-7.9E-07	-78.5959
4201	0	Extremo 1A	-5E-06	334.581	-5.4E-06	133.784	-3.7E-06	-88.5944
4201	0.5	Extremo 1A	-5E-06	350.206	-5.4E-06	133.784	-1E-06	-259.791
4201	1	Extremo 1A	-5E-06	365.831	-5.4E-06	133.784	1.7E-06	-438.8
4201	0	Extremo 2A	-5E-06	334.584	-5.4E-06	133.785	-3.7E-06	-88.5935
4201	0.5	Extremo 2A	-5E-06	350.209	-5.4E-06	133.785	-1E-06	-259.792
4201	1	Extremo 2A	-5E-06	365.834	-5.4E-06	133.785	1.7E-06	-438.802
4202	0	Extremo 1A	-3.5E-06	-226.674	-7.5E-06	-24.1136	-4.4E-06	-412.404
4202	0.5	Extremo 1A	-3.5E-06	-211.049	-7.5E-06	-24.1136	-6.8E-07	-302.974
4202	1	Extremo 1A	-3.5E-06	-195.424	-7.5E-06	-24.1136	3.1E-06	-201.356
4202	0	Extremo 2A	-3.5E-06	-226.675	-7.5E-06	-24.1139	-4.4E-06	-412.406
4202	0.5	Extremo 2A	-3.5E-06	-211.05	-7.5E-06	-24.1139	-6.8E-07	-302.975
4202	1	Extremo 2A	-3.5E-06	-195.425	-7.5E-06	-24.1139	3.1E-06	-201.356
4203	0	Extremo 1A	-2E-06	1031.65	5.5E-06	0.0048	2.8E-06	63.5911
4203	0.5	Extremo 1A	-2E-06	1047.27	5.5E-06	0.0048	4.6E-08	-456.138
4203	1	Extremo 1A	-2E-06	1062.9	5.5E-06	0.0048	-2.7E-06	-983.679
4203	0	Extremo 2A	-2E-06	1031.65	5.5E-06	0.0048	2.8E-06	63.5925
4203	0.5	Extremo 2A	-2E-06	1047.28	5.5E-06	0.0048	4.6E-08	-456.14
4203	1	Extremo 2A	-2E-06	1062.9	5.5E-06	0.0048	-2.7E-06	-983.685
4204	0	Extremo 1A	-3.2E-06	-1199	5.3E-06	0.0083	2.2E-06	-987.974
4204	0.5	Extremo 1A	-3.2E-06	-1183.37	5.3E-06	0.0083	-4E-07	-392.383
4204	1	Extremo 1A	-3.2E-06	-1167.75	5.3E-06	0.0083	-3E-06	195.395
4204	0	Extremo 2A	-3.2E-06	-1199	5.3E-06	0.0083	2.2E-06	-987.981
4204	0.5	Extremo 2A	-3.2E-06	-1183.38	5.3E-06	0.0083	-4E-07	-392.385
4204	1	Extremo 2A	-3.2E-06	-1167.75	5.3E-06	0.0083	-3E-06	195.398
4205	0	Extremo 1A	-4.2E-06	-266.507	2.9E-06	0.0091	5.7E-07	22.2684
4205	0.5	Extremo 1A	-4.2E-06	-250.882	2.9E-06	0.0091	-8.6E-07	151.615
4205	1	Extremo 1A	-4.2E-06	-235.257	2.9E-06	0.0091	-2.3E-06	273.15
4205	0	Extremo 2A	-4.2E-06	-266.509	2.9E-06	0.009	5.7E-07	22.2697
4205	0.5	Extremo 2A	-4.2E-06	-250.884	2.9E-06	0.009	-8.6E-07	151.618
4205	1	Extremo 2A	-4.2E-06	-235.259	2.9E-06	0.009	-2.3E-06	273.154
4206	0	Extremo 1A	-4.4E-06	259.269	-8.4E-07	0.0099	-1.4E-06	290.367
4206	0.5	Extremo 1A	-4.4E-06	274.894	-8.4E-07	0.0099	-1E-06	156.827
4206	1	Extremo 1A	-4.4E-06	290.519	-8.4E-07	0.0099	-5.9E-07	15.4731
4206	0	Extremo 2A	-4.4E-06	259.271	-8.4E-07	0.0098	-1.4E-06	290.371
4206	0.5	Extremo 2A	-4.4E-06	274.896	-8.4E-07	0.0098	-1E-06	156.829
4206	1	Extremo 2A	-4.4E-06	290.521	-8.4E-07	0.0098	-5.9E-07	15.4748
4207	0	Extremo 1A	-3.9E-06	1214.13	-4.3E-06	0.0135	-2.9E-06	226.82
4207	0.5	Extremo 1A	-3.9E-06	1229.76	-4.3E-06	0.0135	-7.8E-07	-384.152
4207	1	Extremo 1A	-3.9E-06	1245.38	-4.3E-06	0.0135	1.4E-06	-1002.94
4207	0	Extremo 2A	-3.9E-06	1214.14	-4.3E-06	0.0135	-2.9E-06	226.823
4207	0.5	Extremo 2A	-3.9E-06	1229.76	-4.3E-06	0.0135	-7.8E-07	-384.153
4207	1	Extremo 2A	-3.9E-06	1245.39	-4.3E-06	0.0135	1.4E-06	-1002.94
4208	0	Extremo 1A	-2.7E-06	-947.938	-5.9E-06	0.0358	-3.5E-06	-953.259
4208	0.5	Extremo 1A	-2.7E-06	-932.313	-5.9E-06	0.0358	-5.2E-07	-483.196
4208	1	Extremo 1A	-2.7E-06	-916.688	-5.9E-06	0.0358	2.4E-06	-20.9459
4208	0	Extremo 2A	-2.7E-06	-947.943	-5.9E-06	0.0357	-3.5E-06	-953.264
4208	0.5	Extremo 2A	-2.7E-06	-932.318	-5.9E-06	0.0357	-5.2E-07	-483.198
4208	1	Extremo 2A	-2.7E-06	-916.693	-5.9E-06	0.0357	2.4E-06	-20.9453
4209	0	Extremo 1A	-1.6E-06	234.743	4.3E-06	-82.506	2.2E-06	-176.146
4209	0.5	Extremo 1A	-1.6E-06	250.368	4.3E-06	-82.506	2.9E-08	-297.424
4209	1	Extremo 1A	-1.6E-06	265.993	4.3E-06	-82.506	-2.1E-06	-426.514
4209	0	Extremo 2A	-1.6E-06	234.745	4.3E-06	-82.5066	2.2E-06	-176.147
4209	0.5	Extremo 2A	-1.6E-06	250.37	4.3E-06	-82.5066	2.9E-08	-297.425
4209	1	Extremo 2A	-1.6E-06	265.995	4.3E-06	-82.5066	-2.1E-06	-426.516
4210	0	Extremo 1A	-2.6E-06	-335.528	4.1E-06	94.8155	1.7E-06	-426.37
4210	0.5	Extremo 1A	-2.6E-06	-319.903	4.1E-06	94.8155	-3.2E-07	-262.512
4210	1	Extremo 1A	-2.6E-06	-304.278	4.1E-06	94.8155	-2.4E-06	-106.467
4210	0	Extremo 2A	-2.6E-06	-335.531	4.1E-06	94.8163	1.7E-06	-426.372
4210	0.5	Extremo 2A	-2.6E-06	-319.906	4.1E-06	94.8163	-3.2E-07	-262.513
4210	1	Extremo 2A	-2.6E-06	-304.281	4.1E-06	94.8163	-2.4E-06	-106.466
4211	0	Extremo 1A	-3.3E-06	-158.702	2.2E-06	35.316	4.2E-07	-70.248
4211	0.5	Extremo 1A	-3.3E-06	-143.077	2.2E-06	35.316	-6.8E-07	5.1969
4211	1	Extremo 1A	-3.3E-06	-127.452	2.2E-06	35.316	-1.8E-06	72.8293
4211	0	Extremo 2A	-3.3E-06	-158.704	2.2E-06	35.3164	4.2E-07	-70.2473
4211	0.5	Extremo 2A	-3.3E-06	-143.079	2.2E-06	35.3164	-6.8E-07	5.1983
4211	1	Extremo 2A	-3.3E-06	-127.454	2.2E-06	35.3164	-1.8E-06	72.8314
4212	0	Extremo 1A	-3.5E-06	148.748	-7E-07	-67.8437	-1.1E-06	85.7769
4212	0.5	Extremo 1A	-3.5E-06	164.373	-7E-07	-67.8437	-7.9E-07	7.4964
4212	1	Extremo 1A	-3.5E-06	179.998	-7E-07	-67.8437	-4.4E-07	-78.5965
4212	0	Extremo 2A	-3.5E-06	148.749	-7E-07	-67.8441	-1.1E-06	85.7789
4212	0.5	Extremo 2A	-3.5E-06	164.374	-7E-07	-67.8441	-7.9E-07	7.498
4212	1	Extremo 2A	-3.5E-06	179.999	-7E-07	-67.8441	-4.4E-07	-78.5954
4213	0	Extremo 1A	-3E-06	334.581	-3.4E-06	-133.757	-2.3E-06	-88.594
4213	0.5	Extremo 1A	-3E-06	350.206	-3.4E-06	-133.757	-6.1E-07	-259.791
4213	1	Extremo 1A	-3E-06	365.831	-3.4E-06	-133.757	1.1E-06	-438.8
4213	0	Extremo 2A	-3E-06	334.584	-3.4E-06	-133.758	-2.3E-06	-88.5931

4213	0.5	Extremo 2A	-3E-06	350.209	-3.4E-06	-133.758	-6.1E-07	-259.791
4213	1	Extremo 2A	-3E-06	365.834	-3.4E-06	-133.758	1.1E-06	-438.802
4214	0	Extremo 1A	-2.1E-06	-226.673	-4.6E-06	24.1853	-2.7E-06	-412.404
4214	0.5	Extremo 1A	-2.1E-06	-211.048	-4.6E-06	24.1853	-4E-07	-302.974
4214	1	Extremo 1A	-2.1E-06	-195.423	-4.6E-06	24.1853	1.9E-06	-201.356
4214	0	Extremo 2A	-2.1E-06	-226.674	-4.6E-06	24.1853	-2.7E-06	-412.406
4214	0.5	Extremo 2A	-2.1E-06	-211.049	-4.6E-06	24.1853	-4E-07	-302.975
4214	1	Extremo 2A	-2.1E-06	-195.424	-4.6E-06	24.1853	1.9E-06	-201.356
4215	0	Extremo 1A	-1.3E-06	37.381	3.4E-06	-30.8492	1.7E-06	-168.324
4215	0.5	Extremo 1A	-1.3E-06	53.006	3.4E-06	-30.8492	1.8E-08	-190.921
4215	1	Extremo 1A	-1.3E-06	68.631	3.4E-06	-30.8492	-1.7E-06	-221.33
4215	0	Extremo 2A	-1.3E-06	37.381	3.4E-06	-30.8493	1.7E-06	-168.325
4215	0.5	Extremo 2A	-1.3E-06	53.006	3.4E-06	-30.8493	1.8E-08	-190.922
4215	1	Extremo 2A	-1.3E-06	68.631	3.4E-06	-30.8493	-1.7E-06	-221.331
4216	0	Extremo 1A	-2E-06	-61.564	3.2E-06	33.9858	1.4E-06	-215.018
4216	0.5	Extremo 1A	-2E-06	-45.939	3.2E-06	33.9858	-2.6E-07	-188.142
4216	1	Extremo 1A	-2E-06	-30.314	3.2E-06	33.9858	-1.9E-06	-169.079
4216	0	Extremo 2A	-2E-06	-61.564	3.2E-06	33.9861	1.4E-06	-215.018
4216	0.5	Extremo 2A	-2E-06	-45.939	3.2E-06	33.9861	-2.6E-07	-188.142
4216	1	Extremo 2A	-2E-06	-30.314	3.2E-06	33.9861	-1.9E-06	-169.079
4217	0	Extremo 1A	-2.6E-06	-50.609	1.7E-06	9.2737	3.2E-07	-126.818
4217	0.5	Extremo 1A	-2.6E-06	-34.984	1.7E-06	9.2737	-5.4E-07	-105.42
4217	1	Extremo 1A	-2.6E-06	-19.359	1.7E-06	9.2737	-1.4E-06	-91.8336
4217	0	Extremo 2A	-2.6E-06	-50.61	1.7E-06	9.274	3.2E-07	-126.818
4217	0.5	Extremo 2A	-2.6E-06	-34.985	1.7E-06	9.274	-5.4E-07	-105.419
4217	1	Extremo 2A	-2.6E-06	-19.36	1.7E-06	9.274	-1.4E-06	-91.8327
4218	0	Extremo 1A	-2.7E-06	32.052	-5.8E-07	-59.9787	-9.1E-07	-86.6014
4218	0.5	Extremo 1A	-2.7E-06	47.677	-5.8E-07	-59.9787	-6.2E-07	-106.534
4218	1	Extremo 1A	-2.7E-06	63.302	-5.8E-07	-59.9787	-3.3E-07	-134.278
4218	0	Extremo 2A	-2.7E-06	32.052	-5.8E-07	-59.979	-9.1E-07	-86.6005
4218	0.5	Extremo 2A	-2.7E-06	47.677	-5.8E-07	-59.979	-6.2E-07	-106.533
4218	1	Extremo 2A	-2.7E-06	63.302	-5.8E-07	-59.979	-3.3E-07	-134.278
4219	0	Extremo 1A	-2.4E-06	39.734	-2.7E-06	-88.8623	-1.8E-06	-167.646
4219	0.5	Extremo 1A	-2.4E-06	55.359	-2.7E-06	-88.8623	-4.7E-07	-191.42
4219	1	Extremo 1A	-2.4E-06	70.984	-2.7E-06	-88.8623	8.6E-07	-223.006
4219	0	Extremo 2A	-2.4E-06	39.735	-2.7E-06	-88.8629	-1.8E-06	-167.646
4219	0.5	Extremo 2A	-2.4E-06	55.36	-2.7E-06	-88.8629	-4.7E-07	-191.42
4219	1	Extremo 2A	-2.4E-06	70.985	-2.7E-06	-88.8629	8.6E-07	-223.006
4220	0	Extremo 1A	-1.6E-06	-73.651	-3.6E-06	-35.5966	-2.1E-06	-223.679
4220	0.5	Extremo 1A	-1.6E-06	-58.026	-3.6E-06	-35.5966	-3.1E-07	-190.759
4220	1	Extremo 1A	-1.6E-06	-42.401	-3.6E-06	-35.5966	1.5E-06	-165.652
4220	0	Extremo 2A	-1.6E-06	-73.651	-3.6E-06	-35.5969	-2.1E-06	-223.679
4220	0.5	Extremo 2A	-1.6E-06	-58.026	-3.6E-06	-35.5969	-3.1E-07	-190.76
4220	1	Extremo 2A	-1.6E-06	-42.401	-3.6E-06	-35.5969	1.5E-06	-165.653
4221	0	Extremo 1A	-1E-06	17.951	2.7E-06	-12.2027	1.4E-06	-137.518
4221	0.5	Extremo 1A	-1E-06	33.576	2.7E-06	-12.2027	9.9E-09	-150.399
4221	1	Extremo 1A	-1E-06	49.201	2.7E-06	-12.2027	-1.3E-06	-171.093
4221	0	Extremo 2A	-1E-06	17.95	2.7E-06	-12.2027	1.4E-06	-137.518
4221	0.5	Extremo 2A	-1E-06	33.575	2.7E-06	-12.2027	9.9E-09	-150.4
4221	1	Extremo 2A	-1E-06	49.2	2.7E-06	-12.2027	-1.3E-06	-171.094
4222	0	Extremo 1A	-1.6E-06	-0.397	2.5E-06	0.3149	1.1E-06	-165.368
4222	0.5	Extremo 1A	-1.6E-06	15.228	2.5E-06	0.3149	-2E-07	-169.076
4222	1	Extremo 1A	-1.6E-06	30.853	2.5E-06	0.3149	-1.5E-06	-180.596
4222	0	Extremo 2A	-1.6E-06	-0.397	2.5E-06	0.315	1.1E-06	-165.368
4222	0.5	Extremo 2A	-1.6E-06	15.228	2.5E-06	0.315	-2E-07	-169.076
4222	1	Extremo 2A	-1.6E-06	30.853	2.5E-06	0.315	-1.5E-06	-180.596
4223	0	Extremo 1A	-2E-06	-13.351	1.3E-06	-11.7878	2.4E-07	-161.838
4223	0.5	Extremo 1A	-2E-06	2.274	1.3E-06	-11.7878	-4.2E-07	-159.069
4223	1	Extremo 1A	-2E-06	17.899	1.3E-06	-11.7878	-1.1E-06	-164.112
4223	0	Extremo 2A	-2E-06	-13.351	1.3E-06	-11.7878	2.4E-07	-161.838
4223	0.5	Extremo 2A	-2E-06	2.274	1.3E-06	-11.7878	-4.2E-07	-159.069
4223	1	Extremo 2A	-2E-06	17.899	1.3E-06	-11.7878	-1.1E-06	-164.112
4224	0	Extremo 1A	-2.1E-06	-15.515	-4.8E-07	-42.3184	-7.2E-07	-165.03
4224	0.5	Extremo 1A	-2.1E-06	0.11	-4.8E-07	-42.3184	-4.8E-07	-161.179
4224	1	Extremo 1A	-2.1E-06	15.735	-4.8E-07	-42.3184	-2.5E-07	-165.14
4224	0	Extremo 2A	-2.1E-06	-15.514	-4.8E-07	-42.3186	-7.2E-07	-165.03
4224	0.5	Extremo 2A	-2.1E-06	0.111	-4.8E-07	-42.3186	-4.8E-07	-161.179
4224	1	Extremo 2A	-2.1E-06	15.736	-4.8E-07	-42.3186	-2.5E-07	-165.14
4225	0	Extremo 1A	-1.9E-06	-34.631	-2.1E-06	-55.3446	-1.4E-06	-186.757
4225	0.5	Extremo 1A	-1.9E-06	-19.006	-2.1E-06	-55.3446	-3.7E-07	-173.347
4225	1	Extremo 1A	-1.9E-06	-3.381	-2.1E-06	-55.3446	6.9E-07	-167.751
4225	0	Extremo 2A	-1.9E-06	-34.631	-2.1E-06	-55.3449	-1.4E-06	-186.757
4225	0.5	Extremo 2A	-1.9E-06	-19.006	-2.1E-06	-55.3449	-3.7E-07	-173.347
4225	1	Extremo 2A	-1.9E-06	-3.381	-2.1E-06	-55.3449	6.9E-07	-167.75
4226	0	Extremo 1A	-1.3E-06	-65.566	-2.8E-06	-47.6103	-1.7E-06	-178.161
4226	0.5	Extremo 1A	-1.3E-06	-49.941	-2.8E-06	-47.6103	-2.4E-07	-149.285
4226	1	Extremo 1A	-1.3E-06	-34.316	-2.8E-06	-47.6103	1.2E-06	-128.221
4226	0	Extremo 2A	-1.3E-06	-65.566	-2.8E-06	-47.6107	-1.7E-06	-178.161
4226	0.5	Extremo 2A	-1.3E-06	-49.941	-2.8E-06	-47.6107	-2.4E-07	-149.285
4226	1	Extremo 2A	-1.3E-06	-34.316	-2.8E-06	-47.6107	1.2E-06	-128.221
4227	0	Extremo 1A	-8E-07	22.77	2.1E-06	-9.3699	1.1E-06	-124.699
4227	0.5	Extremo 1A	-8E-07	38.395	2.1E-06	-9.3699	4.9E-09	-139.99
4227	1	Extremo 1A	-8E-07	54.02	2.1E-06	-9.3699	-1.1E-06	-163.094
4227	0	Extremo 2A	-8E-07	22.77	2.1E-06	-9.3698	1.1E-06	-124.699
4227	0.5	Extremo 2A	-8E-07	38.395	2.1E-06	-9.3698	4.9E-09	-139.99
4227	1	Extremo 2A	-8E-07	54.02	2.1E-06	-9.3698	-1E-06	-163.094
4228	0	Extremo 1A	-1.3E-06	9.598	2E-06	-10.9294	8.3E-07	-161.355
4228	0.5	Extremo 1A	-1.3E-06	25.223	2E-06	-10.9294	-1.6E-07	-170.06
4228	1	Extremo 1A	-1.3E-06	40.848	2E-06	-10.9294	-1.2E-06	-186.578
4228	0	Extremo 2A	-1.3E-06	9.598	2E-06	-10.9294	8.3E-07	-161.355
4228	0.5	Extremo 2A	-1.3E-06	25.223	2E-06	-10.9294	-1.6E-07	-170.06
4228	1	Extremo 2A	-1.3E-06	40.848	2E-06	-10.9294	-1.2E-06	-186.577
4229	0	Extremo 1A	-1.6E-06	-8.088	1E-06	-18.0301	1.8E-07	-182.586
4229	0.5	Extremo 1A	-1.6E-06	7.537	1E-06	-18.0301	-3.3E-07	-182.448
4229	1	Extremo 1A	-1.6E-06	23.162	1E-06	-18.0301	-8.4E-07	-190.123
4229	0	Extremo 2A	-1.6E-06	-8.088	1E-06	-18.0301	1.8E-07	-182.586
4229	0.5	Extremo 2A	-1.6E-06	7.537	1E-06	-18.0301	-3.3E-07	-182.448
4229	1	Extremo 2A	-1.6E-06	23.162	1E-06	-18.0301	-8.4E-07	-190.123
4230	0	Extremo 1A	-1.7E-06	-29.177	-3.9E-07	-29.8788	-5.7E-07	-194.662
4230	0.5	Extremo 1A	-1.7E-06	-13.552	-3.9E-07	-29.8788	-3.8E-07	-183.98
4230	1	Extremo 1A	-1.7E-06	2.073	-3.9E-07	-29.8788	-1.8E-07	-181.11
4230	0	Extremo 2A	-1.7E-06	-29.177	-3.9E-07	-29.8789	-5.7E-07	-194.662
4230	0.5	Extremo 2A	-1.7E-06	-13.552	-3.9E-07	-29.8789	-3.8E-07	-183.98
4230	1	Extremo 2A	-1.7E-06	2.073	-3.9E-07	-29.8789	-1.8E-07	-181.11
4231	0	Extremo 1A	-1.5E-06	-51.595	-1.7E-06	-36.4892	-1.1E-06	-194.406
4231	0.5	Extremo 1A	-1.5E-06	-35.97	-1.7E-06	-36.4892	-2.8E-07	-172.515
4231	1	Extremo 1A	-1.5E-06	-20.345	-1.7E-06	-36.4892	5.5E-07	-158.436
4231	0	Extremo 2A	-1.5E-06	-51.595	-1.7E-06	-36.4895	-1.1E-06	-194.406
4231	0.5	Extremo 2A	-1.5E-06	-35.97	-1.7E-06	-36.4895	-2.8E-07	-172.515
4231	1	Extremo 2A	-1.5E-06	-20.345	-1.7E-06	-36.4895	5.5E-07	-158.436
4232	0	Extremo 1A	-1E-06	-72.156	-2.2E-06	-40.0236	-1.3E-06	-169.752
4232	0.5	Extremo 1A	-1E-06	-56.531	-2.2E-06	-40.0236	-1.9E-07	-137.58
4232	1	Extremo 1A	-1E-06	-40.906	-2.2E-06	-40.0236	9.3E-07	-113.221
4232	0	Extremo 2A	-1E-06	-72.156	-2.2E-06	-40.024	-1.3E-06	-169.752
4232	0.5	Extremo 2A	-1E-06	-56.531	-2.2E-06	-40.024	-1.9E-07	-137.58
4232	1	Extremo 2A	-1E-06	-40.906	-2.2E-06	-40.024	9.3E-07	-113.221
4233	0	Extremo 1A	-6.3E-07	25.708	1.7E-06	-8.3676	8.3E-07	-122.441
4233	0.5	Extremo 1A	-6.3E-07	41.333	1.7E-06	-8.3676	1.7E-09	-139.202
4233	1	Extremo 1A	-6.3E-07	56.958	1.7E-06	-8.3676	-8.3E-07	-163.775
4233	0	Extremo 2A	-6.3E-07	25.708	1.7E-06	-8.3676	8.3E-07	-122.441
4233	0.5	Extremo 2A	-6.3E-07	41.333	1.7E-06	-8.3676	1.7E-09	-139.202
4233	1	Extremo 2A	-6.3E-07	56.958	1.7E-06	-8.3676	-8.3E-07	-163.775
4234	0	Extremo 1A	-9.9E-07	9.662	1.5E-06	-11.8623	6.4E-07	-165.772
4234	0.5	Extremo 1A	-9.9E-07	25.287	1.5E-06	-11.8623	-1.3E-07	-174.509
4234	1	Extremo 1A	-9.9E-07	40.912	1.5E-06	-11.8623	-9E-07	-191.059
4234	0	Extremo 2A	-9.9E-07	9.662	1.5E-06	-11.8624	6.4E-07	-165.772
4234	0.5	Extremo 2A	-9.9E-07	25.287	1.5E-06	-11.8624	-1.3E-07	-174.509
4234	1	Extremo 2A	-9.9E-07	40.912	1.5E-06	-11.8624	-9E-07	-191.059
4235	0	Extremo 1A	-1.3E-06	-9.959	7.9E-07	-15.9441	1.3E-07	-193.777
4235	0.5	Extremo 1A	-1.3E-06	5.666	7.9E-07	-15.9441	-2.6E-07	-192.704
4235	1	Extremo 1A	-1.3E-06	21.291	7.9E-07	-15.9441	-6.6E-07	-199.443
4235	0	Extremo 2A	-1.3E-06	-9.959	7.9E-07	-15.9442	1.3E-07	-193.777
4235	0.5	Extremo 2A	-1.3E-06	5.666	7.9E-07	-15.9442	-2.6E-07	-192.704
4235	1	Extremo 2A	-1.3E-06	21.291	7.9E-07	-15.9442	-6.6E-07	-199.443
4236	0	Extremo 1A	-1.3E-06	-32.873	-3.2E-07	-20.6287	-4.6E-07	-205.84
4236	0.5	Extremo 1A	-1.3E-06	-17.248	-3.2E-07	-20.6287	-3E-07	-193.31
4236	1	Extremo 1A	-1.3E-06	-1.623	-3.2E-07	-20.6287	-1.4E-07	-188.593
4236	0	Extremo 2A	-1.3E-06	-32.873	-3.2E-07	-20.6288	-4.6E-07	-205.84
4236	0.5	Extremo 2A	-1.3E-06	-17.248	-3.2E-07	-20.6288	-3E-07	-193.31
4236	1	Extremo 2A	-1.3E-06	-1.623	-3.2E-07	-20.6288	-1.4E-07	-188.593
4237	0	Extremo 1A	-1.1E-06	-55.416	-1.3E-06	-24.0388	-8.8E-07	-198.528
4237	0.5	Extremo 1A	-1.1E-06	-39.791	-1.3E-06	-24.0388	-2.2E-07	-174.727
4237	1	Extremo 1A	-1.1E-06	-24.166	-1.3E-06	-24.0388	4.3E-07	-158.738
4237	0	Extremo 2A	-1.1E-06	-55.416	-1.3E-06	-24.039	-8.8E-07	-198.528

4237	0.5	Extremo 2A	-1.1E-06	-39.791	-1.3E-06	-24.039	-2.2E-07	-174.727
4237	1	Extremo 2A	-1.1E-06	-24.166	-1.3E-06	-24.039	4.3E-07	-158.738
4238	0	Extremo 1A	-7.9E-07	-75.555	-1.7E-06	-28.4945	-1E-06	-169.011
4238	0.5	Extremo 1A	-7.9E-07	-59.93	-1.7E-06	-28.4945	-1.4E-07	-135.139
4238	1	Extremo 1A	-7.9E-07	-44.305	-1.7E-06	-28.4945	7.3E-07	-109.081
4238	0	Extremo 2A	-7.9E-07	-75.555	-1.7E-06	-28.495	-1E-06	-169.01
4238	0.5	Extremo 2A	-7.9E-07	-59.93	-1.7E-06	-28.495	-1.4E-07	-135.139
4238	1	Extremo 2A	-7.9E-07	-44.305	-1.7E-06	-28.495	7.3E-07	-109.081
4239	0	Extremo 1A	-5E-07	26.485	1.3E-06	-5.8726	6.5E-07	-123.204
4239	0.5	Extremo 1A	-5E-07	42.11	1.3E-06	-5.8726	-2.9E-10	-140.353
4239	1	Extremo 1A	-5E-07	57.735	1.3E-06	-5.8726	-6.5E-07	-165.314
4239	0	Extremo 2A	-5E-07	26.485	1.3E-06	-5.8726	6.5E-07	-123.204
4239	0.5	Extremo 2A	-5E-07	42.11	1.3E-06	-5.8726	-2.9E-10	-140.353
4239	1	Extremo 2A	-5E-07	57.735	1.3E-06	-5.8726	-6.5E-07	-165.314
4240	0	Extremo 1A	-7.8E-07	8.557	1.2E-06	-8.3326	5E-07	-169.666
4240	0.5	Extremo 1A	-7.8E-07	24.182	1.2E-06	-8.3326	-1E-07	-177.851
4240	1	Extremo 1A	-7.8E-07	39.807	1.2E-06	-8.3326	-7.1E-07	-193.849
4240	0	Extremo 2A	-7.8E-07	8.557	1.2E-06	-8.3326	5E-07	-169.666
4240	0.5	Extremo 2A	-7.8E-07	24.182	1.2E-06	-8.3326	-1E-07	-177.851
4240	1	Extremo 2A	-7.8E-07	39.807	1.2E-06	-8.3326	-7.1E-07	-193.849
4241	0	Extremo 1A	-9.9E-07	-11.864	6.1E-07	-10.401	9.8E-08	-199.324
4241	0.5	Extremo 1A	-9.9E-07	3.761	6.1E-07	-10.401	-2.1E-07	-197.298
4241	1	Extremo 1A	-9.9E-07	19.386	6.1E-07	-10.401	-5.1E-07	-203.084
4241	0	Extremo 2A	-9.9E-07	-11.864	6.1E-07	-10.401	9.8E-08	-199.324
4241	0.5	Extremo 2A	-9.9E-07	3.761	6.1E-07	-10.401	-2.1E-07	-197.298
4241	1	Extremo 2A	-9.9E-07	19.386	6.1E-07	-10.401	-5.1E-07	-203.084
4242	0	Extremo 1A	-1E-06	-34.154	-2.6E-07	-12.3027	-3.6E-07	-210.367
4242	0.5	Extremo 1A	-1E-06	-18.529	-2.6E-07	-12.3027	-2.3E-07	-197.196
4242	1	Extremo 1A	-1E-06	-2.904	-2.6E-07	-12.3027	-1E-07	-191.838
4242	0	Extremo 2A	-1E-06	-34.154	-2.6E-07	-12.3028	-3.6E-07	-210.367
4242	0.5	Extremo 2A	-1E-06	-18.529	-2.6E-07	-12.3028	-2.3E-07	-197.196
4242	1	Extremo 2A	-1E-06	-2.904	-2.6E-07	-12.3028	-1E-07	-191.838
4243	0	Extremo 1A	-8.9E-07	-56.373	-1E-06	-13.9299	-6.9E-07	-200.7
4243	0.5	Extremo 1A	-8.9E-07	-40.748	-1E-06	-13.9299	-1.7E-07	-176.42
4243	1	Extremo 1A	-8.9E-07	-25.123	-1E-06	-13.9299	3.4E-07	-159.952
4243	0	Extremo 2A	-8.9E-07	-56.373	-1E-06	-13.93	-6.9E-07	-200.7
4243	0.5	Extremo 2A	-8.9E-07	-40.748	-1E-06	-13.93	-1.7E-07	-176.42
4243	1	Extremo 2A	-8.9E-07	-25.123	-1E-06	-13.93	3.4E-07	-159.952
4244	0	Extremo 1A	-6.2E-07	-76.728	-1.4E-06	-16.8854	-7.9E-07	-169.403
4244	0.5	Extremo 1A	-6.2E-07	-61.103	-1.4E-06	-16.8854	-1.1E-07	-134.945
4244	1	Extremo 1A	-6.2E-07	-45.478	-1.4E-06	-16.8854	5.7E-07	-108.3
4244	0	Extremo 2A	-6.2E-07	-76.728	-1.4E-06	-16.8858	-7.9E-07	-169.403
4244	0.5	Extremo 2A	-6.2E-07	-61.103	-1.4E-06	-16.8858	-1.1E-07	-134.945
4244	1	Extremo 2A	-6.2E-07	-45.478	-1.4E-06	-16.8858	5.7E-07	-108.3
4245	0	Extremo 1A	-4E-07	26.585	1E-06	-2.1021	5.1E-07	-123.985
4245	0.5	Extremo 1A	-4E-07	42.21	1E-06	-2.1021	-1.4E-09	-141.184
4245	1	Extremo 1A	-4E-07	57.835	1E-06	-2.1021	-5.1E-07	-166.195
4245	0	Extremo 2A	-4E-07	26.585	1E-06	-2.1021	5.1E-07	-123.985
4245	0.5	Extremo 2A	-4E-07	42.21	1E-06	-2.1021	-1.4E-09	-141.184
4245	1	Extremo 2A	-4E-07	57.835	1E-06	-2.1021	-5.1E-07	-166.195
4246	0	Extremo 1A	-6.2E-07	7.9	9.5E-07	-2.9486	3.9E-07	-171.608
4246	0.5	Extremo 1A	-6.2E-07	23.525	9.5E-07	-2.9486	-8.3E-08	-179.465
4246	1	Extremo 1A	-6.2E-07	39.15	9.5E-07	-2.9486	-5.6E-07	-195.134
4246	0	Extremo 2A	-6.2E-07	7.9	9.5E-07	-2.9486	3.9E-07	-171.608
4246	0.5	Extremo 2A	-6.2E-07	23.525	9.5E-07	-2.9486	-8.3E-08	-179.465
4246	1	Extremo 2A	-6.2E-07	39.15	9.5E-07	-2.9486	-5.6E-07	-195.134
4247	0	Extremo 1A	-7.8E-07	-12.779	4.7E-07	-3.5782	7.3E-08	-201.594
4247	0.5	Extremo 1A	-7.8E-07	2.846	4.7E-07	-3.5782	-1.6E-07	-199.111
4247	1	Extremo 1A	-7.8E-07	18.471	4.7E-07	-3.5782	-4E-07	-204.44
4247	0	Extremo 2A	-7.8E-07	-12.779	4.7E-07	-3.5783	7.3E-08	-201.595
4247	0.5	Extremo 2A	-7.8E-07	2.846	4.7E-07	-3.5783	-1.6E-07	-199.111
4247	1	Extremo 2A	-7.8E-07	18.471	4.7E-07	-3.5783	-4E-07	-204.44
4248	0	Extremo 1A	-8.1E-07	-34.66	-2.1E-07	-4.1073	-2.9E-07	-212.077
4248	0.5	Extremo 1A	-8.1E-07	-19.035	-2.1E-07	-4.1073	-1.8E-07	-198.654
4248	1	Extremo 1A	-8.1E-07	-3.41	-2.1E-07	-4.1073	-7.7E-08	-193.043
4248	0	Extremo 2A	-8.1E-07	-34.66	-2.1E-07	-4.1074	-2.9E-07	-212.078
4248	0.5	Extremo 2A	-8.1E-07	-19.035	-2.1E-07	-4.1074	-1.8E-07	-198.654
4248	1	Extremo 2A	-8.1E-07	-3.41	-2.1E-07	-4.1074	-7.7E-08	-193.043
4249	0	Extremo 1A	-7E-07	-56.651	-8.2E-07	-4.5921	-5.4E-07	-201.625
4249	0.5	Extremo 1A	-7E-07	-41.026	-8.2E-07	-4.5921	-1.3E-07	-177.206
4249	1	Extremo 1A	-7E-07	-25.401	-8.2E-07	-4.5921	2.7E-07	-160.599
4249	0	Extremo 2A	-7E-07	-56.651	-8.2E-07	-4.5922	-5.4E-07	-201.625
4249	0.5	Extremo 2A	-7E-07	-41.026	-8.2E-07	-4.5922	-1.3E-07	-177.206
4249	1	Extremo 2A	-7E-07	-25.401	-8.2E-07	-4.5922	2.7E-07	-160.599
4250	0	Extremo 1A	-4.8E-07	-77.072	-1.1E-06	-5.6046	-6.2E-07	-169.692
4250	0.5	Extremo 1A	-4.8E-07	-61.447	-1.1E-06	-5.6046	-8.6E-08	-135.062
4250	1	Extremo 1A	-4.8E-07	-45.822	-1.1E-06	-5.6046	4.5E-07	-108.244
4250	0	Extremo 2A	-4.8E-07	-77.072	-1.1E-06	-5.605	-6.2E-07	-169.692
4250	0.5	Extremo 2A	-4.8E-07	-61.447	-1.1E-06	-5.605	-8.6E-08	-135.062
4250	1	Extremo 2A	-4.8E-07	-45.822	-1.1E-06	-5.605	4.5E-07	-108.244
4251	0	Extremo 1A	-3.1E-07	26.585	8.1E-07	2.104	4E-07	-123.986
4251	0.5	Extremo 1A	-3.1E-07	42.21	8.1E-07	2.104	-2E-09	-141.185
4251	1	Extremo 1A	-3.1E-07	57.835	8.1E-07	2.104	-4.1E-07	-166.196
4251	0	Extremo 2A	-3.1E-07	26.585	8.1E-07	2.1041	4E-07	-123.986
4251	0.5	Extremo 2A	-3.1E-07	42.21	8.1E-07	2.1041	-2E-09	-141.185
4251	1	Extremo 2A	-3.1E-07	57.835	8.1E-07	2.1041	-4.1E-07	-166.196
4252	0	Extremo 1A	-4.9E-07	7.9	7.4E-07	2.9445	3.1E-07	-171.611
4252	0.5	Extremo 1A	-4.9E-07	23.525	7.4E-07	2.9445	-6.6E-08	-179.467
4252	1	Extremo 1A	-4.9E-07	39.15	7.4E-07	2.9445	-4.4E-07	-195.136
4252	0	Extremo 2A	-4.9E-07	7.9	7.4E-07	2.9445	3.1E-07	-171.611
4252	0.5	Extremo 2A	-4.9E-07	23.525	7.4E-07	2.9445	-6.6E-08	-179.467
4252	1	Extremo 2A	-4.9E-07	39.15	7.4E-07	2.9445	-4.4E-07	-195.136
4253	0	Extremo 1A	-6.1E-07	-12.78	3.7E-07	3.5698	5.5E-08	-201.598
4253	0.5	Extremo 1A	-6.1E-07	2.845	3.7E-07	3.5698	-1.3E-07	-199.114
4253	1	Extremo 1A	-6.1E-07	18.47	3.7E-07	3.5698	-3.1E-07	-204.443
4253	0	Extremo 2A	-6.1E-07	-12.78	3.7E-07	3.5697	5.5E-08	-201.598
4253	0.5	Extremo 2A	-6.1E-07	2.845	3.7E-07	3.5697	-1.3E-07	-199.114
4253	1	Extremo 2A	-6.1E-07	18.47	3.7E-07	3.5697	-3.1E-07	-204.443
4254	0	Extremo 1A	-6.3E-07	-34.66	-1.7E-07	4.094	-2.3E-07	-212.081
4254	0.5	Extremo 1A	-6.3E-07	-19.035	-1.7E-07	4.094	-1.4E-07	-198.657
4254	1	Extremo 1A	-6.3E-07	-3.41	-1.7E-07	4.094	-5.8E-08	-193.046
4254	0	Extremo 2A	-6.4E-07	-34.66	-1.7E-07	4.0939	-2.3E-07	-212.081
4254	0.5	Extremo 2A	-6.4E-07	-19.035	-1.7E-07	4.0939	-1.4E-07	-198.657
4254	1	Extremo 2A	-6.4E-07	-3.41	-1.7E-07	4.0939	-5.8E-08	-193.046
4255	0	Extremo 1A	-5.5E-07	-56.651	-6.4E-07	4.5701	-4.3E-07	-201.628
4255	0.5	Extremo 1A	-5.5E-07	-41.026	-6.4E-07	4.5701	-1E-07	-177.209
4255	1	Extremo 1A	-5.5E-07	-25.401	-6.4E-07	4.5701	2.2E-07	-160.602
4255	0	Extremo 2A	-5.5E-07	-56.651	-6.4E-07	4.5699	-4.3E-07	-201.628
4255	0.5	Extremo 2A	-5.5E-07	-41.026	-6.4E-07	4.5699	-1E-07	-177.209
4255	1	Extremo 2A	-5.5E-07	-25.401	-6.4E-07	4.5699	2.2E-07	-160.602
4256	0	Extremo 1A	-3.8E-07	-77.073	-8.4E-07	5.55	-4.9E-07	-169.693
4256	0.5	Extremo 1A	-3.8E-07	-61.448	-8.4E-07	5.55	-6.7E-08	-135.063
4256	1	Extremo 1A	-3.8E-07	-45.823	-8.4E-07	5.55	3.5E-07	-108.245
4256	0	Extremo 2A	-3.8E-07	-77.073	-8.4E-07	5.5495	-4.9E-07	-169.693
4256	0.5	Extremo 2A	-3.8E-07	-61.448	-8.4E-07	5.5495	-6.7E-08	-135.063
4256	1	Extremo 2A	-3.8E-07	-45.823	-8.4E-07	5.5495	3.5E-07	-108.245
4257	0	Extremo 1A	-2.5E-07	26.486	6.4E-07	5.8767	3.2E-07	-123.207
4257	0.5	Extremo 1A	-2.5E-07	42.111	6.4E-07	5.8767	-2.3E-09	-140.356
4257	1	Extremo 1A	-2.5E-07	57.736	6.4E-07	5.8767	-3.2E-07	-165.318
4257	0	Extremo 2A	-2.5E-07	26.486	6.3E-07	5.8768	3.2E-07	-123.207
4257	0.5	Extremo 2A	-2.5E-07	42.111	6.3E-07	5.8768	-2.2E-09	-140.356
4257	1	Extremo 2A	-2.5E-07	57.736	6.3E-07	5.8768	-3.2E-07	-165.318
4258	0	Extremo 1A	-3.8E-07	8.556	5.8E-07	8.3309	2.4E-07	-169.674
4258	0.5	Extremo 1A	-3.8E-07	24.181	5.8E-07	8.3309	-5.2E-08	-177.859
4258	1	Extremo 1A	-3.8E-07	39.806	5.8E-07	8.3309	-3.4E-07	-193.855
4258	0	Extremo 2A	-3.8E-07	8.556	5.8E-07	8.3309	2.4E-07	-169.674
4258	0.5	Extremo 2A	-3.8E-07	24.181	5.8E-07	8.3309	-5.2E-08	-177.859
4258	1	Extremo 2A	-3.8E-07	39.806	5.8E-07	8.3309	-3.4E-07	-193.856
4259	0	Extremo 1A	-4.8E-07	-11.865	2.8E-07	10.394	4.1E-08	-199.334
4259	0.5	Extremo 1A	-4.8E-07	3.76	2.8E-07	10.394	-1E-07	-197.308
4259	1	Extremo 1A	-4.8E-07	19.385	2.8E-07	10.394	-2.4E-07	-203.094
4259	0	Extremo 2A	-4.8E-07	-11.866	2.8E-07	10.394	4.1E-08	-199.334
4259	0.5	Extremo 2A	-4.8E-07	3.759	2.8E-07	10.394	-1E-07	-197.308
4259	1	Extremo 2A	-4.8E-07	19.384	2.8E-07	10.394	-2.4E-07	-203.094
4260	0	Extremo 1A	-5E-07	-34.153	-1.4E-07	12.2891	-1.8E-07	-210.377
4260	0.5	Extremo 1A	-5E-07	-18.528	-1.4E-07	12.2891	-1.1E-07	-197.207
4260	1	Extremo 1A	-5E-07	-2.903	-1.4E-07	12.2891	-4.3E-08	-191.849
4260	0	Extremo 2A	-5E-07	-34.153	-1.4E-07	12.289	-1.8E-07	-210.378
4260	0.5	Extremo 2A	-5E-07	-18.528	-1.4E-07	12.289	-1.1E-07	-197.207
4260	1	Extremo 2A	-5E-07	-2.903	-1.4E-07	12.289	-4.3E-08	-191.849
4261	0	Extremo 1A	-4.3E-07	-56.372	-5.1E-07	13.9062	-3.4E-07	-200.708
4261	0.5	Extremo 1A	-4.3E-07	-40.747	-5.1E-07	13.9062	-8.2E-08	-176.428
4261	1	Extremo 1A	-4.3E-07	-25.122	-5.1E-07	13.9062	1.7E-07	-159.961
4261	0	Extremo 2A	-4.3E-07	-56.372	-5.1E-07	13.906	-3.4E-07	-200.708

4261	0.5	Extremo 2A	-4.3E-07	-40.747	-5.1E-07	13.906	-8.2E-08	-176.428
4261	1	Extremo 2A	-4.3E-07	-25.122	-5.1E-07	13.906	1.7E-07	-159.961
4262	0	Extremo 1A	-2.9E-07	-76.73	-6.6E-07	16.8286	-3.8E-07	-169.408
4262	0.5	Extremo 1A	-2.9E-07	-61.105	-6.6E-07	16.8286	-5.2E-08	-134.949
4262	1	Extremo 1A	-2.9E-07	-45.48	-6.6E-07	16.8286	2.8E-07	-108.303
4262	0	Extremo 2A	-2.9E-07	-76.73	-6.6E-07	16.8282	-3.8E-07	-169.408
4262	0.5	Extremo 2A	-2.9E-07	-61.105	-6.6E-07	16.8282	-5.2E-08	-134.949
4262	1	Extremo 2A	-2.9E-07	-45.48	-6.6E-07	16.8282	2.8E-07	-108.303
4263	0	Extremo 1A	-1.9E-07	25.712	5E-07	8.3762	2.5E-07	-122.444
4263	0.5	Extremo 1A	-1.9E-07	41.337	5E-07	8.3762	-2.3E-09	-139.206
4263	1	Extremo 1A	-1.9E-07	56.962	5E-07	8.3762	-2.5E-07	-163.78
4263	0	Extremo 2A	-1.9E-07	25.712	5E-07	8.3764	2.5E-07	-122.444
4263	0.5	Extremo 2A	-1.9E-07	41.337	5E-07	8.3764	-2.3E-09	-139.206
4263	1	Extremo 2A	-1.9E-07	56.962	5E-07	8.3764	-2.5E-07	-163.78
4264	0	Extremo 1A	-3E-07	9.661	4.6E-07	11.867	1.9E-07	-165.786
4264	0.5	Extremo 1A	-3E-07	25.286	4.6E-07	11.867	-4.2E-08	-174.523
4264	1	Extremo 1A	-3E-07	40.911	4.6E-07	11.867	-2.7E-07	-191.072
4264	0	Extremo 2A	-3E-07	9.661	4.5E-07	11.8671	1.9E-07	-165.786
4264	0.5	Extremo 2A	-3E-07	25.286	4.5E-07	11.8671	-4.2E-08	-174.523
4264	1	Extremo 2A	-3E-07	40.911	4.5E-07	11.8671	-2.7E-07	-191.072
4265	0	Extremo 1A	-3.8E-07	-9.961	2.2E-07	15.9413	3E-08	-193.798
4265	0.5	Extremo 1A	-3.8E-07	5.664	2.2E-07	15.9413	-8E-08	-192.724
4265	1	Extremo 1A	-3.8E-07	21.289	2.2E-07	15.9413	-1.9E-07	-199.463
4265	0	Extremo 2A	-3.8E-07	-9.961	2.2E-07	15.9413	3E-08	-193.799
4265	0.5	Extremo 2A	-3.8E-07	5.664	2.2E-07	15.9413	-8E-08	-192.725
4265	1	Extremo 2A	-3.8E-07	21.289	2.2E-07	15.9413	-1.9E-07	-199.463
4266	0	Extremo 1A	-3.9E-07	-32.872	-1.1E-07	20.614	-1.4E-07	-205.862
4266	0.5	Extremo 1A	-3.9E-07	-17.247	-1.1E-07	20.614	-8.8E-08	-193.333
4266	1	Extremo 1A	-3.9E-07	-1.622	-1.1E-07	20.614	-3.2E-08	-188.616
4266	0	Extremo 2A	-3.9E-07	-32.872	-1.1E-07	20.6139	-1.4E-07	-205.863
4266	0.5	Extremo 2A	-3.9E-07	-17.247	-1.1E-07	20.6139	-8.8E-08	-193.333
4266	1	Extremo 2A	-3.9E-07	-1.622	-1.1E-07	20.6139	-3.2E-08	-188.616
4267	0	Extremo 1A	-3.4E-07	-55.415	-4E-07	24.0101	-2.6E-07	-198.545
4267	0.5	Extremo 1A	-3.4E-07	-39.79	-4E-07	24.0101	-6.4E-08	-174.744
4267	1	Extremo 1A	-3.4E-07	-24.165	-4E-07	24.0101	1.4E-07	-158.755
4267	0	Extremo 2A	-3.4E-07	-55.415	-4E-07	24.0099	-2.6E-07	-198.545
4267	0.5	Extremo 2A	-3.4E-07	-39.79	-4E-07	24.0099	-6.4E-08	-174.744
4267	1	Extremo 2A	-3.4E-07	-24.165	-4E-07	24.0099	1.4E-07	-158.755
4268	0	Extremo 1A	-2.3E-07	-75.559	-5.2E-07	28.4331	-3E-07	-169.02
4268	0.5	Extremo 1A	-2.3E-07	-59.934	-5.2E-07	28.4331	-4E-08	-135.146
4268	1	Extremo 1A	-2.3E-07	-44.309	-5.2E-07	28.4331	2.2E-07	-109.085
4268	0	Extremo 2A	-2.3E-07	-75.559	-5.2E-07	28.4325	-3E-07	-169.02
4268	0.5	Extremo 2A	-2.3E-07	-59.934	-5.2E-07	28.4325	-4E-08	-135.146
4268	1	Extremo 2A	-2.3E-07	-44.309	-5.2E-07	28.4325	2.2E-07	-109.085
4269	0	Extremo 1A	-1.5E-07	22.781	3.9E-07	9.3839	1.9E-07	-124.69
4269	0.5	Extremo 1A	-1.5E-07	38.406	3.9E-07	9.3839	-2.2E-09	-139.987
4269	1	Extremo 1A	-1.5E-07	54.031	3.9E-07	9.3839	-2E-07	-163.097
4269	0	Extremo 2A	-1.5E-07	22.782	3.9E-07	9.3841	1.9E-07	-124.69
4269	0.5	Extremo 2A	-1.5E-07	38.407	3.9E-07	9.3841	-2.2E-09	-139.987
4269	1	Extremo 2A	-1.5E-07	54.032	3.9E-07	9.3841	-2E-07	-163.097
4270	0	Extremo 1A	-2.4E-07	9.602	3.6E-07	10.9487	1.5E-07	-161.37
4270	0.5	Extremo 1A	-2.4E-07	25.227	3.6E-07	10.9487	-3.3E-08	-170.077
4270	1	Extremo 1A	-2.4E-07	40.852	3.6E-07	10.9487	-2.1E-07	-186.597
4270	0	Extremo 2A	-2.4E-07	9.602	3.6E-07	10.9489	1.5E-07	-161.371
4270	0.5	Extremo 2A	-2.4E-07	25.227	3.6E-07	10.9489	-3.3E-08	-170.078
4270	1	Extremo 2A	-2.4E-07	40.852	3.6E-07	10.9489	-2.1E-07	-186.597
4271	0	Extremo 1A	-3E-07	-8.086	1.7E-07	18.0381	2.3E-08	-182.627
4271	0.5	Extremo 1A	-3E-07	7.539	1.7E-07	18.0381	-6.3E-08	-182.49
4271	1	Extremo 1A	-3E-07	23.164	1.7E-07	18.0381	-1.5E-07	-190.166
4271	0	Extremo 2A	-3E-07	-8.086	1.7E-07	18.0382	2.3E-08	-182.628
4271	0.5	Extremo 2A	-3E-07	7.539	1.7E-07	18.0382	-6.3E-08	-182.491
4271	1	Extremo 2A	-3E-07	23.164	1.7E-07	18.0382	-1.5E-07	-190.167
4272	0	Extremo 1A	-3.1E-07	-29.177	-8.9E-08	29.8594	-1.1E-07	-194.71
4272	0.5	Extremo 1A	-3.1E-07	-13.552	-8.9E-08	29.8594	-6.9E-08	-184.027
4272	1	Extremo 1A	-3.1E-07	2.073	-8.9E-08	29.8594	-2.4E-08	-181.158
4272	0	Extremo 2A	-3.1E-07	-29.177	-8.9E-08	29.8593	-1.1E-07	-194.71
4272	0.5	Extremo 2A	-3.1E-07	-13.552	-8.9E-08	29.8593	-6.9E-08	-184.028
4272	1	Extremo 2A	-3.1E-07	2.073	-8.9E-08	29.8593	-2.4E-08	-181.158
4273	0	Extremo 1A	-2.6E-07	-51.599	-3.2E-07	36.4479	-2.1E-07	-194.437
4273	0.5	Extremo 1A	-2.6E-07	-35.974	-3.2E-07	36.4479	-5E-08	-172.544
4273	1	Extremo 1A	-2.6E-07	-20.349	-3.2E-07	36.4479	1.1E-07	-158.463
4273	0	Extremo 2A	-2.6E-07	-51.599	-3.2E-07	36.4475	-2.1E-07	-194.437
4273	0.5	Extremo 2A	-2.6E-07	-35.974	-3.2E-07	36.4475	-5E-08	-172.544
4273	1	Extremo 2A	-2.6E-07	-20.349	-3.2E-07	36.4475	1.1E-07	-158.463
4274	0	Extremo 1A	-1.8E-07	-72.168	-4.1E-07	39.9545	-2.3E-07	-169.765
4274	0.5	Extremo 1A	-1.8E-07	-56.543	-4.1E-07	39.9545	-3.1E-08	-137.587
4274	1	Extremo 1A	-1.8E-07	-40.918	-4.1E-07	39.9545	1.7E-07	-113.221
4274	0	Extremo 2A	-1.8E-07	-72.168	-4.1E-07	39.9539	-2.3E-07	-169.765
4274	0.5	Extremo 2A	-1.8E-07	-56.543	-4.1E-07	39.9539	-3.1E-08	-137.587
4274	1	Extremo 2A	-1.8E-07	-40.918	-4.1E-07	39.9539	1.7E-07	-113.221
4275	0	Extremo 1A	-1.2E-07	17.974	3.1E-07	12.2125	1.5E-07	-137.469
4275	0.5	Extremo 1A	-1.2E-07	33.599	3.1E-07	12.2125	-2E-09	-150.362
4275	1	Extremo 1A	-1.2E-07	49.224	3.1E-07	12.2125	-1.6E-07	-171.068
4275	0	Extremo 2A	-1.2E-07	17.975	3.1E-07	12.2126	1.5E-07	-137.468
4275	0.5	Extremo 2A	-1.2E-07	33.6	3.1E-07	12.2126	-2E-09	-150.362
4275	1	Extremo 2A	-1.2E-07	49.225	3.1E-07	12.2126	-1.6E-07	-171.068
4276	0	Extremo 1A	-1.9E-07	-0.362	2.8E-07	-0.2616	1.1E-07	-165.358
4276	0.5	Extremo 1A	-1.9E-07	15.263	2.8E-07	-0.2616	-2.6E-08	-169.083
4276	1	Extremo 1A	-1.9E-07	30.888	2.8E-07	-0.2616	-1.7E-07	-180.621
4276	0	Extremo 2A	-1.9E-07	-0.361	2.8E-07	-0.2609	1.1E-07	-165.358
4276	0.5	Extremo 2A	-1.9E-07	15.264	2.8E-07	-0.2609	-2.6E-08	-169.083
4276	1	Extremo 2A	-1.9E-07	30.889	2.8E-07	-0.2609	-1.7E-07	-180.621
4277	0	Extremo 1A	-2.3E-07	-13.323	1.3E-07	11.8223	1.7E-08	-161.914
4277	0.5	Extremo 1A	-2.3E-07	2.302	1.3E-07	11.8223	-4.9E-08	-159.159
4277	1	Extremo 1A	-2.3E-07	17.927	1.3E-07	11.8223	-1.2E-07	-164.216
4277	0	Extremo 2A	-2.3E-07	-13.322	1.3E-07	11.8228	1.7E-08	-161.915
4277	0.5	Extremo 2A	-2.3E-07	2.303	1.3E-07	11.8228	-4.9E-08	-159.16
4277	1	Extremo 2A	-2.3E-07	17.928	1.3E-07	11.8228	-1.2E-07	-164.217
4278	0	Extremo 1A	-2.4E-07	-15.53	-7.2E-08	42.2838	-9E-08	-165.142
4278	0.5	Extremo 1A	-2.4E-07	0.095	-7.2E-08	42.2838	-5.4E-08	-161.283
4278	1	Extremo 1A	-2.4E-07	15.72	-7.2E-08	42.2838	-1.8E-08	-165.236
4278	0	Extremo 2A	-2.4E-07	-15.531	-7.2E-08	42.2835	-9E-08	-165.143
4278	0.5	Extremo 2A	-2.4E-07	0.094	-7.2E-08	42.2835	-5.4E-08	-161.284
4278	1	Extremo 2A	-2.4E-07	15.719	-7.2E-08	42.2835	-1.8E-08	-165.238
4279	0	Extremo 1A	-2.1E-07	-34.666	-2.5E-07	55.272	-1.6E-07	-186.813
4279	0.5	Extremo 1A	-2.1E-07	-19.041	-2.5E-07	55.272	-3.9E-08	-173.386
4279	1	Extremo 1A	-2.1E-07	-3.416	-2.5E-07	55.272	8.6E-08	-167.772
4279	0	Extremo 2A	-2.1E-07	-34.666	-2.5E-07	55.2712	-1.6E-07	-186.813
4279	0.5	Extremo 2A	-2.1E-07	-19.041	-2.5E-07	55.2712	-3.9E-08	-173.387
4279	1	Extremo 2A	-2.1E-07	-3.416	-2.5E-07	55.2712	8.6E-08	-167.772
4280	0	Extremo 1A	-1.4E-07	-65.593	-3.2E-07	47.5373	-1.8E-07	-178.163
4280	0.5	Extremo 1A	-1.4E-07	-49.968	-3.2E-07	47.5373	-2.4E-08	-149.273
4280	1	Extremo 1A	-1.4E-07	-34.343	-3.2E-07	47.5373	1.4E-07	-128.196
4280	0	Extremo 2A	-1.4E-07	-65.593	-3.2E-07	47.5367	-1.8E-07	-178.163
4280	0.5	Extremo 2A	-1.4E-07	-49.968	-3.2E-07	47.5367	-2.4E-08	-149.273
4280	1	Extremo 2A	-1.4E-07	-34.343	-3.2E-07	47.5367	1.4E-07	-128.195
4281	0	Extremo 1A	-9.6E-08	37.357	2.4E-07	30.8087	1.2E-07	-168.19
4281	0.5	Extremo 1A	-9.6E-08	52.982	2.4E-07	30.8087	-1.8E-09	-190.774
4281	1	Extremo 1A	-9.6E-08	68.607	2.4E-07	30.8087	-1.2E-07	-221.171
4281	0	Extremo 2A	-9.6E-08	37.356	2.4E-07	30.8082	1.2E-07	-168.188
4281	0.5	Extremo 2A	-9.6E-08	52.981	2.4E-07	30.8082	-1.8E-09	-190.773
4281	1	Extremo 2A	-9.6E-08	68.606	2.4E-07	30.8082	-1.2E-07	-221.17
4282	0	Extremo 1A	-1.5E-07	-61.372	2.2E-07	-33.8534	8.8E-08	-214.865
4282	0.5	Extremo 1A	-1.5E-07	-45.747	2.2E-07	-33.8534	-2.1E-08	-188.085
4282	1	Extremo 1A	-1.5E-07	-30.122	2.2E-07	-33.8534	-1.3E-07	-169.117
4282	0	Extremo 2A	-1.5E-07	-61.37	2.2E-07	-33.8518	8.8E-08	-214.863
4282	0.5	Extremo 2A	-1.5E-07	-45.745	2.2E-07	-33.8518	-2.1E-08	-188.084
4282	1	Extremo 2A	-1.5E-07	-30.12	2.2E-07	-33.8518	-1.3E-07	-169.118
4283	0	Extremo 1A	-1.8E-07	-50.47	1E-07	-9.1866	1.2E-08	-126.951
4283	0.5	Extremo 1A	-1.8E-07	-34.845	1E-07	-9.1866	-3.9E-08	-105.623
4283	1	Extremo 1A	-1.8E-07	-19.22	1E-07	-9.1866	-9E-08	-92.1069
4283	0	Extremo 2A	-1.8E-07	-50.468	1E-07	-9.1855	1.2E-08	-126.953
4283	0.5	Extremo 2A	-1.8E-07	-34.843	1E-07	-9.1855	-3.9E-08	-105.625
4283	1	Extremo 2A	-1.8E-07	-19.218	1E-07	-9.1855	-9E-08	-92.1102
4284	0	Extremo 1A	-1.9E-07	31.955	-5.8E-08	59.9093	-7.1E-08	-86.8845
4284	0.5	Extremo 1A	-1.9E-07	47.58	-5.8E-08	59.9093	-4.2E-08	-106.768
4284	1	Extremo 1A	-1.9E-07	63.205	-5.8E-08	59.9093	-1.3E-08	-134.464
4284	0	Extremo 2A	-1.9E-07	31.954	-5.8E-08	59.9086	-7.1E-08	-86.8879
4284	0.5	Extremo 2A	-1.9E-07	47.579	-5.8E-08	59.9086	-4.2E-08	-106.771
4284	1	Extremo 2A	-1.9E-07	63.204	-5.8E-08	59.9086	-1.3E-08	-134.467
4285	0	Extremo 1A	-1.6E-07	39.549	-2E-07	88.7188	-1.3E-07	-167.755
4285	0.5	Extremo 1A	-1.6E-07	55.174	-2E-07	88.7188	-3E-08	-191.436
4285	1	Extremo 1A	-1.6E-07	70.799	-2E-07	88.7188	6.8E-08	-222.93
4285	0	Extremo 2A	-1.6E-07	39.547	-2E-07	88.7172	-1.3E-07	-167.757

4285	0.5	Extremo 2A	-1.6E-07	55.172	-2E-07	88.7172	-3E-08	-191.437
4285	1	Extremo 2A	-1.6E-07	70.797	-2E-07	88.7172	6.8E-08	-222.929
4286	0	Extremo 1A	-1.1E-07	-73.663	-2.5E-07	35.5547	-1.4E-07	-223.594
4286	0.5	Extremo 1A	-1.1E-07	-58.038	-2.5E-07	35.5547	-1.9E-08	-190.669
4286	1	Extremo 1A	-1.1E-07	-42.413	-2.5E-07	35.5547	1.1E-07	-165.556
4286	0	Extremo 2A	-1.1E-07	-73.663	-2.5E-07	35.5544	-1.4E-07	-223.593
4286	0.5	Extremo 2A	-1.1E-07	-58.038	-2.5E-07	35.5544	-1.9E-08	-190.668
4286	1	Extremo 2A	-1.1E-07	-42.413	-2.5E-07	35.5544	1.1E-07	-165.555
4287	0	Extremo 1A	-7.6E-08	234.234	1.9E-07	82.3264	9.4E-08	-175.984
4287	0.5	Extremo 1A	-7.6E-08	249.859	1.9E-07	82.3264	-1.5E-09	-297.007
4287	1	Extremo 1A	-7.6E-08	265.484	1.9E-07	82.3264	-9.7E-08	-425.843
4287	0	Extremo 2A	-7.6E-08	234.228	1.9E-07	82.3242	9.3E-08	-175.982
4287	0.5	Extremo 2A	-7.6E-08	249.853	1.9E-07	82.3242	-1.5E-09	-297.002
4287	1	Extremo 2A	-7.6E-08	265.478	1.9E-07	82.3242	-9.7E-08	-425.835
4288	0	Extremo 1A	-1.2E-07	-334.664	1.7E-07	-94.5507	6.9E-08	-425.68
4288	0.5	Extremo 1A	-1.2E-07	-319.039	1.7E-07	-94.5507	-1.6E-08	-262.254
4288	1	Extremo 1A	-1.2E-07	-303.414	1.7E-07	-94.5507	-1E-07	-106.641
4288	0	Extremo 2A	-1.2E-07	-334.653	1.7E-07	-94.5475	6.9E-08	-425.671
4288	0.5	Extremo 2A	-1.2E-07	-319.028	1.7E-07	-94.5475	-1.6E-08	-262.251
4288	1	Extremo 2A	-1.2E-07	-303.403	1.7E-07	-94.5475	-1E-07	-106.643
4289	0	Extremo 1A	-1.4E-07	-158.279	8E-08	-35.1829	9.2E-09	-70.4843
4289	0.5	Extremo 1A	-1.4E-07	-142.654	8E-08	-35.1829	-3.1E-08	4.7492
4289	1	Extremo 1A	-1.4E-07	-127.029	8E-08	-35.1829	-7E-08	72.1702
4289	0	Extremo 2A	-1.4E-07	-158.274	8E-08	-35.1812	9.2E-09	-70.4871
4289	0.5	Extremo 2A	-1.4E-07	-142.649	8E-08	-35.1812	-3.1E-08	4.7439
4289	1	Extremo 2A	-1.4E-07	-127.024	8E-08	-35.1812	-7E-08	72.1623
4290	0	Extremo 1A	-1.5E-07	148.423	-4.6E-08	67.7433	-5.6E-08	85.1161
4290	0.5	Extremo 1A	-1.5E-07	164.048	-4.6E-08	67.7433	-3.3E-08	6.9981
4290	1	Extremo 1A	-1.5E-07	179.673	-4.6E-08	67.7433	-1E-08	-78.9323
4290	0	Extremo 2A	-1.5E-07	148.42	-4.6E-08	67.7422	-5.6E-08	85.1083
4290	0.5	Extremo 2A	-1.5E-07	164.045	-4.6E-08	67.7422	-3.3E-08	6.9922
4290	1	Extremo 2A	-1.5E-07	179.67	-4.6E-08	67.7422	-9.9E-09	-78.9363
4291	0	Extremo 1A	-1.3E-07	333.777	-1.5E-07	133.507	-1E-07	-88.8862
4291	0.5	Extremo 1A	-1.3E-07	349.402	-1.5E-07	133.507	-2.4E-08	-259.681
4291	1	Extremo 1A	-1.3E-07	365.027	-1.5E-07	133.507	5.4E-08	-438.289
4291	0	Extremo 2A	-1.3E-07	333.768	-1.5E-07	133.504	-1E-07	-88.8897
4291	0.5	Extremo 2A	-1.3E-07	349.393	-1.5E-07	133.504	-2.4E-08	-259.68
4291	1	Extremo 2A	-1.3E-07	365.018	-1.5E-07	133.504	5.4E-08	-438.282
4292	0	Extremo 1A	-8.7E-08	-226.366	-2E-07	-24.1025	-1.1E-07	-411.931
4292	0.5	Extremo 1A	-8.7E-08	-210.741	-2E-07	-24.1025	-1.5E-08	-302.655
4292	1	Extremo 1A	-8.7E-08	-195.116	-2E-07	-24.1025	8.4E-08	-201.191
4292	0	Extremo 2A	-8.7E-08	-226.362	-2E-07	-24.1013	-1.1E-07	-411.926
4292	0.5	Extremo 2A	-8.7E-08	-210.737	-2E-07	-24.1013	-1.5E-08	-302.651
4292	1	Extremo 2A	-8.7E-08	-195.112	-2E-07	-24.1013	8.4E-08	-201.189
4293	0	Extremo 1A	-6E-08	1029.19	1.5E-07	-0.0012	7.3E-08	63.1712
4293	0.5	Extremo 1A	-6E-08	1044.81	1.5E-07	-0.0012	-1.3E-09	-455.329
4293	1	Extremo 1A	-6E-08	1060.44	1.5E-07	-0.0012	-7.6E-08	-981.641
4293	0	Extremo 2A	-6E-08	1029.16	1.5E-07	-0.0012	7.3E-08	63.1663
4293	0.5	Extremo 2A	-6E-08	1044.78	1.5E-07	-0.0012	-1.3E-09	-455.319
4293	1	Extremo 2A	-6E-08	1060.41	1.5E-07	-0.0012	-7.6E-08	-981.617
4294	0	Extremo 1A	-9.2E-08	-1196.02	1.3E-07	-0.0022	5.4E-08	-985.902
4294	0.5	Extremo 1A	-9.2E-08	-1180.4	1.3E-07	-0.0022	-1.3E-08	-391.797
4294	1	Extremo 1A	-9.2E-08	-1164.77	1.3E-07	-0.0022	-8E-08	194.494
4294	0	Extremo 2A	-9.2E-08	-1195.99	1.3E-07	-0.0021	5.4E-08	-985.877
4294	0.5	Extremo 2A	-9.2E-08	-1180.36	1.3E-07	-0.0021	-1.3E-08	-391.791
4294	1	Extremo 2A	-9.2E-08	-1164.74	1.3E-07	-0.0021	-8E-08	194.484
4295	0	Extremo 1A	-1.1E-07	-265.818	6.2E-08	-0.0024	6.8E-09	21.8271
4295	0.5	Extremo 1A	-1.1E-07	-250.193	6.2E-08	-0.0024	-2.4E-08	150.83
4295	1	Extremo 1A	-1.1E-07	-234.568	6.2E-08	-0.0024	-5.5E-08	272.02
4295	0	Extremo 2A	-1.1E-07	-265.81	6.2E-08	-0.0023	6.8E-09	21.8219
4295	0.5	Extremo 2A	-1.1E-07	-250.185	6.2E-08	-0.0023	-2.4E-08	150.821
4295	1	Extremo 2A	-1.1E-07	-234.56	6.2E-08	-0.0023	-5.5E-08	272.007
4296	0	Extremo 1A	-1.2E-07	258.714	-3.7E-08	-0.0026	-4.5E-08	289.258
4296	0.5	Extremo 1A	-1.2E-07	274.339	-3.7E-08	-0.0026	-2.6E-08	155.995
4296	1	Extremo 1A	-1.2E-07	289.964	-3.7E-08	-0.0026	-7.4E-09	14.9195
4296	0	Extremo 2A	-1.2E-07	258.707	-3.7E-08	-0.0025	-4.5E-08	289.245
4296	0.5	Extremo 2A	-1.2E-07	274.332	-3.7E-08	-0.0025	-2.6E-08	155.985
4296	1	Extremo 2A	-1.2E-07	289.957	-3.7E-08	-0.0025	-7.3E-09	14.9129
4297	0	Extremo 1A	-1E-07	1211.47	-1.2E-07	-0.0037	-7.9E-08	225.853
4297	0.5	Extremo 1A	-1E-07	1227.1	-1.2E-07	-0.0037	-1.8E-08	-383.789
4297	1	Extremo 1A	-1E-07	1242.72	-1.2E-07	-0.0037	4.3E-08	-1001.24
4297	0	Extremo 2A	-1E-07	1211.44	-1.2E-07	-0.0035	-7.9E-08	225.842
4297	0.5	Extremo 2A	-1E-07	1227.07	-1.2E-07	-0.0035	-1.8E-08	-383.785
4297	1	Extremo 2A	-1E-07	1242.69	-1.2E-07	-0.0035	4.2E-08	-1001.22
4298	0	Extremo 1A	-6.8E-08	-946.111	-1.5E-07	-0.01	-8.9E-08	-951.65
4298	0.5	Extremo 1A	-6.8E-08	-930.486	-1.5E-07	-0.01	-1.1E-08	-482.501
4298	1	Extremo 1A	-6.8E-08	-914.861	-1.5E-07	-0.01	6.6E-08	-21.1638
4298	0	Extremo 2A	-6.8E-08	-946.09	-1.5E-07	-0.0095	-8.8E-08	-951.631
4298	0.5	Extremo 2A	-6.8E-08	-930.465	-1.5E-07	-0.0095	-1.1E-08	-482.492
4298	1	Extremo 2A	-6.8E-08	-914.84	-1.5E-07	-0.0095	6.6E-08	-21.1664
4299	0	Extremo 1A	-4.7E-08	234.234	1.2E-07	-82.3288	5.8E-08	-175.984
4299	0.5	Extremo 1A	-4.7E-08	249.859	1.2E-07	-82.3288	-1.2E-09	-297.007
4299	1	Extremo 1A	-4.7E-08	265.484	1.2E-07	-82.3288	-6E-08	-425.843
4299	0	Extremo 2A	-4.7E-08	234.228	1.2E-07	-82.3265	5.7E-08	-175.982
4299	0.5	Extremo 2A	-4.7E-08	249.853	1.2E-07	-82.3265	-1.1E-09	-297.002
4299	1	Extremo 2A	-4.7E-08	265.478	1.2E-07	-82.3265	-6E-08	-425.835
4300	0	Extremo 1A	-7.2E-08	-334.664	1E-07	94.5464	4.2E-08	-425.68
4300	0.5	Extremo 1A	-7.2E-08	-319.039	1E-07	94.5464	-1E-08	-262.254
4300	1	Extremo 1A	-7.2E-08	-303.414	1E-07	94.5464	-6.3E-08	-106.641
4300	0	Extremo 2A	-7.3E-08	-334.653	1E-07	94.5434	4.2E-08	-425.671
4300	0.5	Extremo 2A	-7.3E-08	-319.028	1E-07	94.5434	-1E-08	-262.251
4300	1	Extremo 2A	-7.3E-08	-303.403	1E-07	94.5434	-6.2E-08	-106.643
4301	0	Extremo 1A	-8.9E-08	-158.279	4.8E-08	35.1781	4.9E-09	-70.4844
4301	0.5	Extremo 1A	-8.9E-08	-142.654	4.8E-08	35.1781	-1.9E-08	4.749
4301	1	Extremo 1A	-8.9E-08	-127.029	4.8E-08	35.1781	-4.3E-08	72.17
4301	0	Extremo 2A	-9E-08	-158.274	4.8E-08	35.1767	4.9E-09	-70.4872
4301	0.5	Extremo 2A	-9E-08	-142.649	4.8E-08	35.1767	-1.9E-08	4.7437
4301	1	Extremo 2A	-9E-08	-127.024	4.8E-08	35.1767	-4.3E-08	72.1622
4302	0	Extremo 1A	-9.2E-08	148.423	-3E-08	-67.7486	-3.5E-08	85.116
4302	0.5	Extremo 1A	-9.2E-08	164.048	-3E-08	-67.7486	-2E-08	6.998
4302	1	Extremo 1A	-9.2E-08	179.673	-3E-08	-67.7486	-5.4E-09	-78.9325
4302	0	Extremo 2A	-9.2E-08	148.42	-3E-08	-67.7472	-3.5E-08	85.1081
4302	0.5	Extremo 2A	-9.2E-08	164.045	-3E-08	-67.7472	-2E-08	6.9921
4302	1	Extremo 2A	-9.2E-08	179.67	-3E-08	-67.7472	-5.4E-09	-78.9365
4303	0	Extremo 1A	-7.8E-08	333.777	-9.6E-08	-133.514	-6.2E-08	-88.8864
4303	0.5	Extremo 1A	-7.8E-08	349.402	-9.6E-08	-133.514	-1.4E-08	-259.681
4303	1	Extremo 1A	-7.8E-08	365.027	-9.6E-08	-133.514	3.4E-08	-438.289
4303	0	Extremo 2A	-7.9E-08	333.768	-9.6E-08	-133.511	-6.2E-08	-88.8898
4303	0.5	Extremo 2A	-7.9E-08	349.393	-9.6E-08	-133.511	-1.4E-08	-259.68
4303	1	Extremo 2A	-7.9E-08	365.018	-9.6E-08	-133.511	3.4E-08	-438.283
4304	0	Extremo 1A	-5.3E-08	-226.366	-1.2E-07	24.0824	-7E-08	-411.931
4304	0.5	Extremo 1A	-5.3E-08	-210.741	-1.2E-07	24.0824	-8.8E-09	-302.655
4304	1	Extremo 1A	-5.3E-08	-195.116	-1.2E-07	24.0824	5.2E-08	-201.191
4304	0	Extremo 2A	-5.3E-08	-226.362	-1.2E-07	24.0823	-6.9E-08	-411.926
4304	0.5	Extremo 2A	-5.3E-08	-210.737	-1.2E-07	24.0823	-8.8E-09	-302.651
4304	1	Extremo 2A	-5.3E-08	-195.112	-1.2E-07	24.0823	5.2E-08	-201.189
4305	0	Extremo 1A	-3.7E-08	37.357	9.2E-08	-30.811	4.5E-08	-168.19
4305	0.5	Extremo 1A	-3.7E-08	52.982	9.2E-08	-30.811	-9.8E-10	-190.775
4305	1	Extremo 1A	-3.7E-08	68.607	9.2E-08	-30.811	-4.7E-08	-221.172
4305	0	Extremo 2A	-3.7E-08	37.356	9.1E-08	-30.8104	4.5E-08	-168.188
4305	0.5	Extremo 2A	-3.7E-08	52.981	9.1E-08	-30.8104	-9.7E-10	-190.773
4305	1	Extremo 2A	-3.7E-08	68.606	9.1E-08	-30.8104	-4.7E-08	-221.17
4306	0	Extremo 1A	-5.7E-08	-61.372	8.2E-08	33.8491	3.3E-08	-214.865
4306	0.5	Extremo 1A	-5.7E-08	-45.747	8.2E-08	33.8491	-8.2E-09	-188.085
4306	1	Extremo 1A	-5.7E-08	-30.122	8.2E-08	33.8491	-4.9E-08	-169.118
4306	0	Extremo 2A	-5.7E-08	-61.37	8.1E-08	33.8477	3.2E-08	-214.863
4306	0.5	Extremo 2A	-5.7E-08	-45.745	8.1E-08	33.8477	-8.1E-09	-188.084
4306	1	Extremo 2A	-5.7E-08	-30.12	8.1E-08	33.8477	-4.9E-08	-169.118
4307	0	Extremo 1A	-7E-08	-50.47	3.7E-08	9.1818	3.6E-09	-126.952
4307	0.5	Extremo 1A	-7E-08	-34.845	3.7E-08	9.1818	-1.5E-08	-105.623
4307	1	Extremo 1A	-7E-08	-19.22	3.7E-08	9.1818	-3.3E-08	-92.1073
4307	0	Extremo 2A	-7.1E-08	-50.468	3.7E-08	9.1809	3.6E-09	-126.953
4307	0.5	Extremo 2A	-7.1E-08	-34.843	3.7E-08	9.1809	-1.5E-08	-105.626
4307	1	Extremo 2A	-7.1E-08	-19.218	3.7E-08	9.1809	-3.3E-08	-92.1105
4308	0	Extremo 1A	-7.2E-08	31.955	-2.4E-08	-59.9146	-2.8E-08	-86.8849
4308	0.5	Extremo 1A	-7.2E-08	47.58	-2.4E-08	-59.9146	-1.6E-08	-106.769
4308	1	Extremo 1A	-7.2E-08	63.205	-2.4E-08	-59.9146	-3.9E-09	-134.465
4308	0	Extremo 2A	-7.3E-08	31.954	-2.4E-08	-59.9136	-2.8E-08	-86.8882
4308	0.5	Extremo 2A	-7.3E-08	47.579	-2.4E-08	-59.9136	-1.6E-08	-106.771
4308	1	Extremo 2A	-7.3E-08	63.204	-2.4E-08	-59.9136	-3.9E-09	-134.467
4309	0	Extremo 1A	-6.1E-08	39.549	-7.6E-08	-88.7262	-4.9E-08	-167.756
4309	0.5	Extremo 1A	-6.1E-08	55.174	-7.6E-08	-88.7262	-1.1E-08	-191.437
4309	1	Extremo 1A	-6.1E-08	70.799	-7.6E-08	-88.7262	2.7E-08	-222.93
4309	0	Extremo 2A	-6.2E-08	39.547	-7.5E-08	-88.7242	-4.9E-08	-167.757

4309	0.5	Extremo 2A	-6.2E-08	55.172	-7.5E-08	-88.7242	-1.1E-08	-191.437
4309	1	Extremo 2A	-6.2E-08	70.797	-7.5E-08	-88.7242	2.6E-08	-222.929
4310	0	Extremo 1A	-4.2E-08	-73.663	-9.6E-08	-35.5748	-5.5E-08	-223.595
4310	0.5	Extremo 1A	-4.2E-08	-58.038	-9.6E-08	-35.5748	-6.8E-09	-190.669
4310	1	Extremo 1A	-4.2E-08	-42.413	-9.6E-08	-35.5748	4.1E-08	-165.556
4310	0	Extremo 2A	-4.2E-08	-73.663	-9.5E-08	-35.5735	-5.4E-08	-223.594
4310	0.5	Extremo 2A	-4.2E-08	-58.038	-9.5E-08	-35.5735	-6.8E-09	-190.668
4310	1	Extremo 2A	-4.2E-08	-42.413	-9.5E-08	-35.5735	4.1E-08	-165.555
4311	0	Extremo 1A	-2.9E-08	17.974	7.2E-08	-12.2147	3.5E-08	-137.469
4311	0.5	Extremo 1A	-2.9E-08	33.599	7.2E-08	-12.2147	-8.3E-10	-150.363
4311	1	Extremo 1A	-2.9E-08	49.224	7.2E-08	-12.2147	-3.7E-08	-171.069
4311	0	Extremo 2A	-3E-08	17.975	7.1E-08	-12.2147	3.5E-08	-137.469
4311	0.5	Extremo 2A	-3E-08	33.6	7.1E-08	-12.2147	-8.1E-10	-150.362
4311	1	Extremo 2A	-3E-08	49.225	7.1E-08	-12.2147	-3.6E-08	-171.068
4312	0	Extremo 1A	-4.5E-08	-0.362	6.4E-08	0.2574	2.5E-08	-165.359
4312	0.5	Extremo 1A	-4.5E-08	15.263	6.4E-08	0.2574	-6.5E-09	-169.084
4312	1	Extremo 1A	-4.5E-08	30.888	6.4E-08	0.2574	-3.8E-08	-180.622
4312	0	Extremo 2A	-4.5E-08	-0.361	6.3E-08	0.2569	2.5E-08	-165.358
4312	0.5	Extremo 2A	-4.5E-08	15.264	6.3E-08	0.2569	-6.4E-09	-169.084
4312	1	Extremo 2A	-4.5E-08	30.889	6.3E-08	0.2569	-3.8E-08	-180.622
4313	0	Extremo 1A	-5.5E-08	-13.323	2.9E-08	-11.8271	2.5E-09	-161.915
4313	0.5	Extremo 1A	-5.5E-08	2.302	2.9E-08	-11.8271	-1.2E-08	-159.159
4313	1	Extremo 1A	-5.5E-08	17.927	2.9E-08	-11.8271	-2.6E-08	-164.217
4313	0	Extremo 2A	-5.6E-08	-13.322	2.8E-08	-11.8273	2.5E-09	-161.915
4313	0.5	Extremo 2A	-5.6E-08	2.303	2.8E-08	-11.8273	-1.2E-08	-159.16
4313	1	Extremo 2A	-5.6E-08	17.928	2.8E-08	-11.8273	-2.6E-08	-164.218
4314	0	Extremo 1A	-5.7E-08	-15.53	-1.9E-08	-42.2892	-2.2E-08	-165.142
4314	0.5	Extremo 1A	-5.7E-08	0.095	-1.9E-08	-42.2892	-1.3E-08	-161.283
4314	1	Extremo 1A	-5.7E-08	15.72	-1.9E-08	-42.2892	-2.8E-09	-165.237
4314	0	Extremo 2A	-5.7E-08	-15.531	-1.9E-08	-42.2885	-2.2E-08	-165.144
4314	0.5	Extremo 2A	-5.7E-08	0.094	-1.9E-08	-42.2885	-1.2E-08	-161.285
4314	1	Extremo 2A	-5.7E-08	15.719	-1.9E-08	-42.2885	-2.8E-09	-165.238
4315	0	Extremo 1A	-4.8E-08	-34.666	-6E-08	-55.2795	-3.9E-08	-186.813
4315	0.5	Extremo 1A	-4.8E-08	-19.041	-6E-08	-55.2795	-8.8E-09	-173.387
4315	1	Extremo 1A	-4.8E-08	-3.416	-6E-08	-55.2795	2.1E-08	-167.773
4315	0	Extremo 2A	-4.9E-08	-34.666	-5.9E-08	-55.2783	-3.8E-08	-186.814
4315	0.5	Extremo 2A	-4.9E-08	-19.041	-5.9E-08	-55.2783	-8.6E-09	-173.387
4315	1	Extremo 2A	-4.9E-08	-3.416	-5.9E-08	-55.2783	2.1E-08	-167.773
4316	0	Extremo 1A	-3.3E-08	-65.593	-7.5E-08	-47.5575	-4.3E-08	-178.164
4316	0.5	Extremo 1A	-3.3E-08	-49.968	-7.5E-08	-47.5575	-5.3E-09	-149.274
4316	1	Extremo 1A	-3.3E-08	-34.343	-7.5E-08	-47.5575	3.2E-08	-128.196
4316	0	Extremo 2A	-3.3E-08	-65.593	-7.4E-08	-47.5558	-4.2E-08	-178.164
4316	0.5	Extremo 2A	-3.3E-08	-49.968	-7.4E-08	-47.5558	-5.2E-09	-149.273
4316	1	Extremo 2A	-3.3E-08	-34.343	-7.4E-08	-47.5558	3.2E-08	-128.196
4317	0	Extremo 1A	-2.3E-08	22.782	5.7E-08	-9.3859	2.8E-08	-124.691
4317	0.5	Extremo 1A	-2.3E-08	38.407	5.7E-08	-9.3859	-7E-10	-139.988
4317	1	Extremo 1A	-2.3E-08	54.032	5.7E-08	-9.3859	-2.9E-08	-163.097
4317	0	Extremo 2A	-2.4E-08	22.782	5.5E-08	-9.386	2.7E-08	-124.691
4317	0.5	Extremo 2A	-2.4E-08	38.407	5.5E-08	-9.386	-6.8E-10	-139.988
4317	1	Extremo 2A	-2.4E-08	54.032	5.5E-08	-9.386	-2.8E-08	-163.097
4318	0	Extremo 1A	-3.5E-08	9.602	5E-08	-10.9527	2E-08	-161.371
4318	0.5	Extremo 1A	-3.5E-08	25.227	5E-08	-10.9527	-5.1E-09	-170.078
4318	1	Extremo 1A	-3.5E-08	40.852	5E-08	-10.9527	-3E-08	-186.598
4318	0	Extremo 2A	-3.6E-08	9.602	4.9E-08	-10.9528	1.9E-08	-161.371
4318	0.5	Extremo 2A	-3.6E-08	25.227	4.9E-08	-10.9528	-5E-09	-170.078
4318	1	Extremo 2A	-3.6E-08	40.852	4.9E-08	-10.9528	-2.9E-08	-186.598
4319	0	Extremo 1A	-4.3E-08	-8.086	2.2E-08	-18.0427	1.8E-09	-182.628
4319	0.5	Extremo 1A	-4.3E-08	7.539	2.2E-08	-18.0427	-9.2E-09	-182.491
4319	1	Extremo 1A	-4.3E-08	23.164	2.2E-08	-18.0427	-2E-08	-190.167
4319	0	Extremo 2A	-4.4E-08	-8.086	2.1E-08	-18.0426	1.7E-09	-182.629
4319	0.5	Extremo 2A	-4.4E-08	7.539	2.1E-08	-18.0426	-9E-09	-182.492
4319	1	Extremo 2A	-4.4E-08	23.164	2.1E-08	-18.0426	-2E-08	-190.167
4320	0	Extremo 1A	-4.4E-08	-29.177	-1.6E-08	-29.8648	-1.8E-08	-194.711
4320	0.5	Extremo 1A	-4.4E-08	-13.552	-1.6E-08	-29.8648	-9.8E-09	-184.028
4320	1	Extremo 1A	-4.4E-08	2.073	-1.6E-08	-29.8648	-2E-09	-181.159
4320	0	Extremo 2A	-4.5E-08	-29.177	-1.5E-08	-29.8643	-1.7E-08	-194.711
4320	0.5	Extremo 2A	-4.5E-08	-13.552	-1.5E-08	-29.8643	-9.6E-09	-184.029
4320	1	Extremo 2A	-4.5E-08	2.073	-1.5E-08	-29.8643	-1.9E-09	-181.159
4321	0	Extremo 1A	-3.8E-08	-51.599	-4.7E-08	-36.4555	-3E-08	-194.438
4321	0.5	Extremo 1A	-3.8E-08	-35.974	-4.7E-08	-36.4555	-6.8E-09	-172.544
4321	1	Extremo 1A	-3.8E-08	-20.349	-4.7E-08	-36.4555	1.7E-08	-158.464
4321	0	Extremo 2A	-3.9E-08	-51.599	-4.6E-08	-36.4547	-3E-08	-194.438
4321	0.5	Extremo 2A	-3.9E-08	-35.974	-4.6E-08	-36.4547	-6.7E-09	-172.545
4321	1	Extremo 2A	-3.9E-08	-20.349	-4.6E-08	-36.4547	1.6E-08	-158.464
4322	0	Extremo 1A	-2.6E-08	-72.168	-5.9E-08	-39.9749	-3.4E-08	-169.765
4322	0.5	Extremo 1A	-2.6E-08	-56.543	-5.9E-08	-39.9749	-4.1E-09	-137.587
4322	1	Extremo 1A	-2.6E-08	-40.918	-5.9E-08	-39.9749	2.5E-08	-113.221
4322	0	Extremo 2A	-2.6E-08	-72.169	-5.8E-08	-39.9732	-3.3E-08	-169.765
4322	0.5	Extremo 2A	-2.6E-08	-56.544	-5.8E-08	-39.9732	-4E-09	-137.587
4322	1	Extremo 2A	-2.6E-08	-40.919	-5.8E-08	-39.9732	2.5E-08	-113.221
4323	0	Extremo 1A	-1.8E-08	25.712	4.4E-08	-8.3779	2.2E-08	-122.444
4323	0.5	Extremo 1A	-1.8E-08	41.337	4.4E-08	-8.3779	-5.9E-10	-139.207
4323	1	Extremo 1A	-1.8E-08	56.962	4.4E-08	-8.3779	-2.3E-08	-163.781
4323	0	Extremo 2A	-1.9E-08	25.712	4.3E-08	-8.3779	2.1E-08	-122.444
4323	0.5	Extremo 2A	-1.9E-08	41.337	4.3E-08	-8.3779	-5.6E-10	-139.207
4323	1	Extremo 2A	-1.9E-08	56.962	4.3E-08	-8.3779	-2.2E-08	-163.781
4324	0	Extremo 1A	-2.8E-08	9.661	3.9E-08	-11.8708	1.5E-08	-165.787
4324	0.5	Extremo 1A	-2.8E-08	25.286	3.9E-08	-11.8708	-4.1E-09	-174.524
4324	1	Extremo 1A	-2.8E-08	40.911	3.9E-08	-11.8708	-2.3E-08	-191.073
4324	0	Extremo 2A	-2.9E-08	9.661	3.7E-08	-11.8707	1.5E-08	-165.787
4324	0.5	Extremo 2A	-2.9E-08	25.286	3.7E-08	-11.8707	-3.9E-09	-174.524
4324	1	Extremo 2A	-2.9E-08	40.911	3.7E-08	-11.8707	-2.3E-08	-191.073
4325	0	Extremo 1A	-3.4E-08	-9.961	1.7E-08	-15.9459	1.2E-09	-193.8
4325	0.5	Extremo 1A	-3.4E-08	5.664	1.7E-08	-15.9459	-7.2E-09	-192.726
4325	1	Extremo 1A	-3.4E-08	21.289	1.7E-08	-15.9459	-1.6E-08	-199.464
4325	0	Extremo 2A	-3.5E-08	-9.961	1.6E-08	-15.9457	1.1E-09	-193.8
4325	0.5	Extremo 2A	-3.5E-08	5.664	1.6E-08	-15.9457	-7E-09	-192.726
4325	1	Extremo 2A	-3.5E-08	21.289	1.6E-08	-15.9457	-1.5E-08	-199.465
4326	0	Extremo 1A	-3.5E-08	-32.872	-1.3E-08	-20.6194	-1.4E-08	-205.864
4326	0.5	Extremo 1A	-3.5E-08	-17.247	-1.3E-08	-20.6194	-7.7E-09	-193.334
4326	1	Extremo 1A	-3.5E-08	-1.622	-1.3E-08	-20.6194	-1.4E-09	-188.617
4326	0	Extremo 2A	-3.6E-08	-32.872	-1.2E-08	-20.619	-1.4E-08	-205.864
4326	0.5	Extremo 2A	-3.6E-08	-17.247	-1.2E-08	-20.619	-7.4E-09	-193.334
4326	1	Extremo 2A	-3.6E-08	-1.622	-1.2E-08	-20.619	-1.3E-09	-188.617
4327	0	Extremo 1A	-3E-08	-55.416	-3.7E-08	-24.0179	-2.4E-08	-198.546
4327	0.5	Extremo 1A	-3E-08	-39.791	-3.7E-08	-24.0179	-5.3E-09	-174.745
4327	1	Extremo 1A	-3E-08	-24.166	-3.7E-08	-24.0179	1.3E-08	-158.756
4327	0	Extremo 2A	-3.1E-08	-55.416	-3.6E-08	-24.0172	-2.3E-08	-198.547
4327	0.5	Extremo 2A	-3.1E-08	-39.791	-3.6E-08	-24.0172	-5.1E-09	-174.745
4327	1	Extremo 2A	-3.1E-08	-24.166	-3.6E-08	-24.0172	1.3E-08	-158.756
4328	0	Extremo 1A	-2E-08	-75.56	-4.6E-08	-28.4536	-2.6E-08	-169.02
4328	0.5	Extremo 1A	-2E-08	-59.935	-4.6E-08	-28.4536	-3.2E-09	-135.147
4328	1	Extremo 1A	-2E-08	-44.31	-4.6E-08	-28.4536	2E-08	-109.086
4328	0	Extremo 2A	-2.1E-08	-75.56	-4.5E-08	-28.4521	-2.5E-08	-169.02
4328	0.5	Extremo 2A	-2.1E-08	-59.935	-4.5E-08	-28.4521	-3.1E-09	-135.147
4328	1	Extremo 2A	-2.1E-08	-44.31	-4.5E-08	-28.4521	1.9E-08	-109.086
4329	0	Extremo 1A	-1.4E-08	26.486	3.4E-08	-5.8778	1.7E-08	-123.208
4329	0.5	Extremo 1A	-1.4E-08	42.111	3.4E-08	-5.8778	-4.9E-10	-140.358
4329	1	Extremo 1A	-1.4E-08	57.736	3.4E-08	-5.8778	-1.8E-08	-165.32
4329	0	Extremo 2A	-1.5E-08	26.486	3.2E-08	-5.8778	1.6E-08	-123.208
4329	0.5	Extremo 2A	-1.5E-08	42.111	3.2E-08	-5.8778	-4.6E-10	-140.358
4329	1	Extremo 2A	-1.5E-08	57.736	3.2E-08	-5.8778	-1.7E-08	-165.32
4330	0	Extremo 1A	-2.2E-08	8.556	3E-08	-8.3342	1.2E-08	-169.676
4330	0.5	Extremo 1A	-2.2E-08	24.181	3E-08	-8.3342	-3.2E-09	-177.861
4330	1	Extremo 1A	-2.2E-08	39.806	3E-08	-8.3342	-1.8E-08	-193.858
4330	0	Extremo 2A	-2.3E-08	8.556	2.8E-08	-8.334	1.1E-08	-169.676
4330	0.5	Extremo 2A	-2.3E-08	24.181	2.8E-08	-8.334	-3E-09	-177.861
4330	1	Extremo 2A	-2.3E-08	39.806	2.8E-08	-8.334	-1.7E-08	-193.858
4331	0	Extremo 1A	-2.7E-08	-11.866	1.3E-08	-10.3983	7.5E-10	-199.337
4331	0.5	Extremo 1A	-2.7E-08	3.759	1.3E-08	-10.3983	-5.7E-09	-197.31
4331	1	Extremo 1A	-2.7E-08	19.384	1.3E-08	-10.3983	-1.2E-08	-203.096
4331	0	Extremo 2A	-2.9E-08	-11.866	1.2E-08	-10.3981	6.9E-10	-199.337
4331	0.5	Extremo 2A	-2.9E-08	3.759	1.2E-08	-10.3981	-5.4E-09	-197.31
4331	1	Extremo 2A	-2.9E-08	19.384	1.2E-08	-10.3981	-1.1E-08	-203.096
4332	0	Extremo 1A	-2.8E-08	-34.154	-1E-08	-12.2945	-1.1E-08	-210.38
4332	0.5	Extremo 1A	-2.8E-08	-18.529	-1E-08	-12.2945	-6E-09	-197.209
4332	1	Extremo 1A	-2.8E-08	-2.904	-1E-08	-12.2945	-8.8E-10	-191.851
4332	0	Extremo 2A	-2.9E-08	-34.154	-9.7E-09	-12.2942	-1.1E-08	-210.38
4332	0.5	Extremo 2A	-2.9E-08	-18.529	-9.7E-09	-12.2942	-5.7E-09	-197.209
4332	1	Extremo 2A	-2.9E-08	-2.904	-9.7E-09	-12.2942	-8.1E-10	-191.851
4333	0	Extremo 1A	-2.3E-08	-56.373	-3E-08	-13.9142	-1.9E-08	-200.71
4333	0.5	Extremo 1A	-2.3E-08	-40.748	-3E-08	-13.9142	-4.1E-09	-176.43
4333	1	Extremo 1A	-2.3E-08	-25.123	-3E-08	-13.9142	1.1E-08	-159.963
4333	0	Extremo 2A	-2.5E-08	-56.373	-2.8E-08	-13.9136	-1.8E-08	-200.71

4333	0.5	Extremo 2A	-2.5E-08	-40.748	-2.8E-08	-13.9136	-3.9E-09	-176.43
4333	1	Extremo 2A	-2.5E-08	-25.123	-2.8E-08	-13.9136	1E-08	-159.963
4334	0	Extremo 1A	-1.6E-08	-76.73	-3.7E-08	-16.8496	-2.1E-08	-169.409
4334	0.5	Extremo 1A	-1.6E-08	-61.105	-3.7E-08	-16.8496	-2.5E-09	-134.95
4334	1	Extremo 1A	-1.6E-08	-45.48	-3.7E-08	-16.8496	1.6E-08	-108.304
4334	0	Extremo 2A	-1.7E-08	-76.73	-3.4E-08	-16.8481	-2E-08	-169.409
4334	0.5	Extremo 2A	-1.7E-08	-61.105	-3.4E-08	-16.8481	-2.3E-09	-134.95
4334	1	Extremo 2A	-1.7E-08	-45.48	-3.4E-08	-16.8481	1.5E-08	-108.304
4335	0	Extremo 1A	-1.1E-08	26.586	2.7E-08	-2.1041	1.3E-08	-123.988
4335	0.5	Extremo 1A	-1.1E-08	42.211	2.7E-08	-2.1041	-4.1E-10	-141.187
4335	1	Extremo 1A	-1.1E-08	57.836	2.7E-08	-2.1041	-1.4E-08	-166.199
4335	0	Extremo 2A	-1.2E-08	26.586	2.4E-08	-2.1041	1.2E-08	-123.988
4335	0.5	Extremo 2A	-1.2E-08	42.211	2.4E-08	-2.1041	-3.8E-10	-141.187
4335	1	Extremo 2A	-1.2E-08	57.836	2.4E-08	-2.1041	-1.2E-08	-166.198
4336	0	Extremo 1A	-1.7E-08	7.9	2.3E-08	-2.9469	9.1E-09	-171.615
4336	0.5	Extremo 1A	-1.7E-08	23.525	2.3E-08	-2.9469	-2.5E-09	-179.471
4336	1	Extremo 1A	-1.7E-08	39.15	2.3E-08	-2.9469	-1.4E-08	-195.139
4336	0	Extremo 2A	-1.9E-08	7.9	2.1E-08	-2.9468	8.2E-09	-171.614
4336	0.5	Extremo 2A	-1.9E-08	23.525	2.1E-08	-2.9468	-2.3E-09	-179.47
4336	1	Extremo 2A	-1.9E-08	39.15	2.1E-08	-2.9468	-1.3E-08	-195.139
4337	0	Extremo 1A	-2.1E-08	-12.78	9.7E-09	-3.5737	4.2E-10	-201.602
4337	0.5	Extremo 1A	-2.1E-08	2.845	9.7E-09	-3.5737	-4.5E-09	-199.118
4337	1	Extremo 1A	-2.1E-08	18.47	9.7E-09	-3.5737	-9.3E-09	-204.446
4337	0	Extremo 2A	-2.3E-08	-12.78	8.7E-09	-3.5734	3.4E-10	-201.602
4337	0.5	Extremo 2A	-2.3E-08	2.845	8.7E-09	-3.5734	-4E-09	-199.118
4337	1	Extremo 2A	-2.3E-08	18.47	8.7E-09	-3.5734	-8.4E-09	-204.446
4338	0	Extremo 1A	-2.2E-08	-34.66	-8.3E-09	-4.0994	-8.8E-09	-212.085
4338	0.5	Extremo 1A	-2.2E-08	-19.035	-8.3E-09	-4.0994	-4.7E-09	-198.661
4338	1	Extremo 1A	-2.2E-08	-3.41	-8.3E-09	-4.0994	-5.3E-10	-193.049
4338	0	Extremo 2A	-2.4E-08	-34.66	-7.6E-09	-4.099	-8E-09	-212.084
4338	0.5	Extremo 2A	-2.4E-08	-19.035	-7.6E-09	-4.099	-4.2E-09	-198.661
4338	1	Extremo 2A	-2.4E-08	-3.41	-7.6E-09	-4.099	-4.3E-10	-193.049
4339	0	Extremo 1A	-1.8E-08	-56.651	-2.3E-08	-4.5786	-1.5E-08	-201.631
4339	0.5	Extremo 1A	-1.8E-08	-41.026	-2.3E-08	-4.5786	-3.2E-09	-177.212
4339	1	Extremo 1A	-1.8E-08	-25.401	-2.3E-08	-4.5786	8.5E-09	-160.605
4339	0	Extremo 2A	-2E-08	-56.651	-2.1E-08	-4.578	-1.3E-08	-201.631
4339	0.5	Extremo 2A	-2E-08	-41.026	-2.1E-08	-4.578	-2.9E-09	-177.212
4339	1	Extremo 2A	-2E-08	-25.401	-2.1E-08	-4.578	7.7E-09	-160.605
4340	0	Extremo 1A	-1.2E-08	-77.073	-2.9E-08	-5.5716	-1.6E-08	-169.695
4340	0.5	Extremo 1A	-1.2E-08	-61.448	-2.9E-08	-5.5716	-1.9E-09	-135.064
4340	1	Extremo 1A	-1.2E-08	-45.823	-2.9E-08	-5.5716	1.2E-08	-108.246
4340	0	Extremo 2A	-1.4E-08	-77.073	-2.6E-08	-5.5701	-1.5E-08	-169.695
4340	0.5	Extremo 2A	-1.4E-08	-61.448	-2.6E-08	-5.5701	-1.7E-09	-135.064
4340	1	Extremo 2A	-1.4E-08	-45.823	-2.6E-08	-5.5701	1.1E-08	-108.246
4341	0	Extremo 1A	-9E-09	26.586	2.1E-08	2.1037	1E-08	-123.988
4341	0.5	Extremo 1A	-9E-09	42.211	2.1E-08	2.1037	-3.5E-10	-141.187
4341	1	Extremo 1A	-9E-09	57.836	2.1E-08	2.1037	-1.1E-08	-166.198
4341	0	Extremo 2A	-1E-08	26.586	1.7E-08	2.1036	8.4E-09	-123.988
4341	0.5	Extremo 2A	-1E-08	42.211	1.7E-08	2.1036	-3E-10	-141.187
4341	1	Extremo 2A	-1E-08	57.836	1.7E-08	2.1036	-9E-09	-166.198
4342	0	Extremo 1A	-1.4E-08	7.9	1.8E-08	2.9476	7E-09	-171.614
4342	0.5	Extremo 1A	-1.4E-08	23.525	1.8E-08	2.9476	-2E-09	-179.47
4342	1	Extremo 1A	-1.4E-08	39.15	1.8E-08	2.9476	-1.1E-08	-195.139
4342	0	Extremo 2A	-1.6E-08	7.9	1.5E-08	2.9477	5.8E-09	-171.614
4342	0.5	Extremo 2A	-1.6E-08	23.525	1.5E-08	2.9477	-1.7E-09	-179.47
4342	1	Extremo 2A	-1.6E-08	39.15	1.5E-08	2.9477	-9.2E-09	-195.139
4343	0	Extremo 1A	-1.7E-08	-12.78	7.3E-09	3.5752	1.7E-10	-201.601
4343	0.5	Extremo 1A	-1.7E-08	2.845	7.3E-09	3.5752	-3.5E-09	-199.117
4343	1	Extremo 1A	-1.7E-08	18.47	7.3E-09	3.5752	-7.1E-09	-204.446
4343	0	Extremo 2A	-1.9E-08	-12.78	6E-09	3.5754	6.1E-11	-201.601
4343	0.5	Extremo 2A	-1.9E-08	2.845	6E-09	3.5754	-2.9E-09	-199.117
4343	1	Extremo 2A	-1.9E-08	18.47	6E-09	3.5754	-5.9E-09	-204.446
4344	0	Extremo 1A	-1.7E-08	-34.66	-6.8E-09	4.1019	-7E-09	-212.084
4344	0.5	Extremo 1A	-1.7E-08	-19.035	-6.8E-09	4.1019	-3.6E-09	-198.66
4344	1	Extremo 1A	-1.7E-08	-3.41	-6.8E-09	4.1019	-2.6E-10	-193.049
4344	0	Extremo 2A	-2E-08	-34.66	-5.9E-09	4.1022	-6E-09	-212.084
4344	0.5	Extremo 2A	-2E-08	-19.035	-5.9E-09	4.1022	-3.1E-09	-198.66
4344	1	Extremo 2A	-2E-08	-3.41	-5.9E-09	4.1022	-1.3E-10	-193.048
4345	0	Extremo 1A	-1.5E-08	-56.651	-1.8E-08	4.5826	-1.2E-08	-201.631
4345	0.5	Extremo 1A	-1.5E-08	-41.026	-1.8E-08	4.5826	-2.5E-09	-177.211
4345	1	Extremo 1A	-1.5E-08	-25.401	-1.8E-08	4.5826	6.7E-09	-160.604
4345	0	Extremo 2A	-1.7E-08	-56.651	-1.6E-08	4.5833	-9.9E-09	-201.63
4345	0.5	Extremo 2A	-1.7E-08	-41.026	-1.6E-08	4.5833	-2.1E-09	-177.211
4345	1	Extremo 2A	-1.7E-08	-25.401	-1.6E-08	4.5833	5.8E-09	-160.604
4346	0	Extremo 1A	-9.8E-09	-77.073	-2.2E-08	5.5817	-1.3E-08	-169.695
4346	0.5	Extremo 1A	-9.8E-09	-61.448	-2.2E-08	5.5817	-1.5E-09	-135.064
4346	1	Extremo 1A	-9.8E-09	-45.823	-2.2E-08	5.5817	9.8E-09	-108.246
4346	0	Extremo 2A	-1.1E-08	-77.073	-1.9E-08	5.5833	-1.1E-08	-169.694
4346	0.5	Extremo 2A	-1.1E-08	-61.448	-1.9E-08	5.5833	-1.2E-09	-135.064
4346	1	Extremo 2A	-1.1E-08	-45.823	-1.9E-08	5.5833	8.3E-09	-108.246
4347	0	Extremo 1A	-7.2E-09	26.486	1.6E-08	5.877	7.7E-09	-123.208
4347	0.5	Extremo 1A	-7.2E-09	42.111	1.6E-08	5.877	-2.9E-10	-140.357
4347	1	Extremo 1A	-7.2E-09	57.736	1.6E-08	5.877	-8.3E-09	-165.319
4347	0	Extremo 2A	-8.9E-09	26.486	1.2E-08	5.8768	5.6E-09	-123.207
4347	0.5	Extremo 2A	-8.9E-09	42.111	1.2E-08	5.8768	-2.4E-10	-140.357
4347	1	Extremo 2A	-8.9E-09	57.736	1.2E-08	5.8768	-6.1E-09	-165.319
4348	0	Extremo 1A	-1.1E-08	8.556	1.4E-08	8.3345	5.3E-09	-169.675
4348	0.5	Extremo 1A	-1.1E-08	24.181	1.4E-08	8.3345	-1.6E-09	-177.859
4348	1	Extremo 1A	-1.1E-08	39.806	1.4E-08	8.3345	-8.4E-09	-193.856
4348	0	Extremo 2A	-1.4E-08	8.557	9.9E-09	8.3344	3.8E-09	-169.674
4348	0.5	Extremo 2A	-1.4E-08	24.182	9.9E-09	8.3344	-1.2E-09	-177.859
4348	1	Extremo 2A	-1.4E-08	39.807	9.9E-09	8.3344	-6.1E-09	-193.856
4349	0	Extremo 1A	-1.3E-08	-11.866	5.4E-09	10.3996	-1.4E-11	-199.335
4349	0.5	Extremo 1A	-1.3E-08	3.759	5.4E-09	10.3996	-2.7E-09	-197.308
4349	1	Extremo 1A	-1.3E-08	19.384	5.4E-09	10.3996	-5.4E-09	-203.094
4349	0	Extremo 2A	-1.7E-08	-11.865	3.7E-09	10.3997	-1.6E-10	-199.334
4349	0.5	Extremo 2A	-1.7E-08	3.76	3.7E-09	10.3997	-2E-09	-197.308
4349	1	Extremo 2A	-1.7E-08	19.385	3.7E-09	10.3997	-3.9E-09	-203.094
4350	0	Extremo 1A	-1.4E-08	-34.154	-5.5E-09	12.297	-5.6E-09	-210.378
4350	0.5	Extremo 1A	-1.4E-08	-18.529	-5.5E-09	12.297	-2.8E-09	-197.207
4350	1	Extremo 1A	-1.4E-08	-2.904	-5.5E-09	12.297	-4.9E-11	-191.849
4350	0	Extremo 2A	-1.7E-08	-34.154	-4.4E-09	12.2974	-4.3E-09	-210.377
4350	0.5	Extremo 2A	-1.7E-08	-18.529	-4.4E-09	12.2974	-2.1E-09	-197.207
4350	1	Extremo 2A	-1.7E-08	-2.904	-4.4E-09	12.2974	1.2E-10	-191.849
4351	0	Extremo 1A	-1.2E-08	-56.373	-1.5E-08	13.9186	-9.2E-09	-200.709
4351	0.5	Extremo 1A	-1.2E-08	-40.748	-1.5E-08	13.9186	-1.9E-09	-176.429
4351	1	Extremo 1A	-1.2E-08	-25.123	-1.5E-08	13.9186	5.4E-09	-159.961
4351	0	Extremo 2A	-1.4E-08	-56.373	-1.1E-08	13.9193	-6.9E-09	-200.708
4351	0.5	Extremo 2A	-1.4E-08	-40.748	-1.1E-08	13.9193	-1.4E-09	-176.428
4351	1	Extremo 2A	-1.4E-08	-25.123	-1.1E-08	13.9193	4.1E-09	-159.96
4352	0	Extremo 1A	-7.8E-09	-76.73	-1.8E-08	16.8601	-9.9E-09	-169.408
4352	0.5	Extremo 1A	-7.8E-09	-61.105	-1.8E-08	16.8601	-1.1E-09	-134.949
4352	1	Extremo 1A	-7.8E-09	-45.48	-1.8E-08	16.8601	7.7E-09	-108.303
4352	0	Extremo 2A	-9.7E-09	-76.73	-1.3E-08	16.8618	-7.5E-09	-169.408
4352	0.5	Extremo 2A	-9.7E-09	-61.105	-1.3E-08	16.8618	-8.2E-10	-134.949
4352	1	Extremo 2A	-9.7E-09	-45.48	-1.3E-08	16.8618	5.8E-09	-108.303
4353	0	Extremo 1A	-5.8E-09	25.711	1.2E-08	8.3763	5.8E-09	-122.444
4353	0.5	Extremo 1A	-5.8E-09	41.336	1.2E-08	8.3763	-2.5E-10	-139.206
4353	1	Extremo 1A	-5.8E-09	56.961	1.2E-08	8.3763	-6.3E-09	-163.78
4353	0	Extremo 2A	-7.9E-09	25.711	6.7E-09	8.3758	3.2E-09	-122.444
4353	0.5	Extremo 2A	-7.9E-09	41.336	6.7E-09	8.3758	-1.8E-10	-139.206
4353	1	Extremo 2A	-7.9E-09	56.961	6.7E-09	8.3758	-3.5E-09	-163.78
4354	0	Extremo 1A	-8.8E-09	9.661	1E-08	11.8699	3.9E-09	-165.785
4354	0.5	Extremo 1A	-8.8E-09	25.286	1E-08	11.8699	-1.2E-09	-174.522
4354	1	Extremo 1A	-8.8E-09	40.911	1E-08	11.8699	-6.4E-09	-191.071
4354	0	Extremo 2A	-1.2E-08	9.662	5.5E-09	11.8695	2E-09	-165.784
4354	0.5	Extremo 2A	-1.2E-08	25.287	5.5E-09	11.8695	-7.4E-10	-174.521
4354	1	Extremo 2A	-1.2E-08	40.912	5.5E-09	11.8695	-3.5E-09	-191.07
4355	0	Extremo 1A	-1.1E-08	-9.96	3.9E-09	15.9464	-1.6E-10	-193.796
4355	0.5	Extremo 1A	-1.1E-08	5.665	3.9E-09	15.9464	-2.1E-09	-192.722
4355	1	Extremo 1A	-1.1E-08	21.29	3.9E-09	15.9464	-4E-09	-199.461
4355	0	Extremo 2A	-1.5E-08	-9.96	1.7E-09	15.9463	-3.6E-10	-193.795
4355	0.5	Extremo 2A	-1.5E-08	5.665	1.7E-09	15.9463	-1.2E-09	-192.721
4355	1	Extremo 2A	-1.5E-08	21.29	1.7E-09	15.9463	-2.1E-09	-199.46
4356	0	Extremo 1A	-1.1E-08	-32.872	-4.5E-09	20.6221	-4.4E-09	-205.86
4356	0.5	Extremo 1A	-1.1E-08	-17.247	-4.5E-09	20.6221	-2.2E-09	-193.33
4356	1	Extremo 1A	-1.1E-08	-1.622	-4.5E-09	20.6221	1.1E-10	-188.613
4356	0	Extremo 2A	-1.5E-08	-32.872	-3.1E-09	20.6225	-2.8E-09	-205.859
4356	0.5	Extremo 2A	-1.5E-08	-17.247	-3.1E-09	20.6225	-1.2E-09	-193.329
4356	1	Extremo 2A	-1.5E-08	-1.622	-3.1E-09	20.6225	3.3E-10	-188.612
4357	0	Extremo 1A	-9.3E-09	-55.416	-1.1E-08	24.0232	-7.1E-09	-198.543
4357	0.5	Extremo 1A	-9.3E-09	-39.791	-1.1E-08	24.0232	-1.4E-09	-174.742
4357	1	Extremo 1A	-9.3E-09	-24.166	-1.1E-08	24.0232	4.3E-09	-158.753
4357	0	Extremo 2A	-1.3E-08	-55.416	-7E-09	24.0241	-4.3E-09	-198.542

4357	0.5	Extremo 2A	-1.3E-08	-39.791	-7E-09	24.0241	-8.1E-10	-174.741
4357	1	Extremo 2A	-1.3E-08	-24.166	-7E-09	24.0241	2.7E-09	-158.752
4358	0	Extremo 1A	-6.2E-09	-75.559	-1.4E-08	28.4649	-7.7E-09	-169.019
4358	0.5	Extremo 1A	-6.2E-09	-59.934	-1.4E-08	28.4649	-8.5E-10	-135.145
4358	1	Extremo 1A	-6.2E-09	-44.309	-1.4E-08	28.4649	6E-09	-109.085
4358	0	Extremo 2A	-8.6E-09	-75.559	-8.2E-09	28.4669	-4.6E-09	-169.018
4358	0.5	Extremo 2A	-8.6E-09	-59.934	-8.2E-09	28.4669	-4.6E-10	-135.145
4358	1	Extremo 2A	-8.6E-09	-44.309	-8.2E-09	28.4669	3.6E-09	-109.085
4359	0	Extremo 1A	-4.7E-09	22.779	9E-09	9.3833	4.3E-09	-124.692
4359	0.5	Extremo 1A	-4.7E-09	38.404	9E-09	9.3833	-2.1E-10	-139.988
4359	1	Extremo 1A	-4.7E-09	54.029	9E-09	9.3833	-4.7E-09	-163.097
4359	0	Extremo 2A	-7.4E-09	22.779	2.1E-09	9.3826	9.3E-10	-124.693
4359	0.5	Extremo 2A	-7.4E-09	38.404	2.1E-09	9.3826	-1.3E-10	-139.989
4359	1	Extremo 2A	-7.4E-09	54.029	2.1E-09	9.3826	-1.2E-09	-163.097
4360	0	Extremo 1A	-7.1E-09	9.601	7.5E-09	10.9492	2.8E-09	-161.368
4360	0.5	Extremo 1A	-7.1E-09	25.226	7.5E-09	10.9492	-9.4E-10	-170.075
4360	1	Extremo 1A	-7.1E-09	40.851	7.5E-09	10.9492	-4.7E-09	-186.594
4360	0	Extremo 2A	-1.1E-08	9.601	1.5E-09	10.9481	4E-10	-161.368
4360	0.5	Extremo 2A	-1.1E-08	25.226	1.5E-09	10.9481	-3.3E-10	-170.074
4360	1	Extremo 2A	-1.1E-08	40.851	1.5E-09	10.9481	-1.1E-09	-186.593
4361	0	Extremo 1A	-8.7E-09	-8.086	2.6E-09	18.0412	-2.7E-10	-182.621
4361	0.5	Extremo 1A	-8.7E-09	7.539	2.6E-09	18.0412	-1.6E-09	-182.484
4361	1	Extremo 1A	-8.7E-09	23.164	2.6E-09	18.0412	-2.9E-09	-190.159
4361	0	Extremo 2A	-1.4E-08	-8.087	-1E-10	18.0407	-5.3E-10	-182.619
4361	0.5	Extremo 2A	-1.4E-08	7.538	-1E-10	18.0407	-4.8E-10	-182.482
4361	1	Extremo 2A	-1.4E-08	23.163	-1E-10	18.0407	-4.3E-10	-190.157
4362	0	Extremo 1A	-8.9E-09	-29.177	-3.7E-09	29.8683	-3.5E-09	-194.702
4362	0.5	Extremo 1A	-8.9E-09	-13.552	-3.7E-09	29.8683	-1.6E-09	-184.02
4362	1	Extremo 1A	-8.9E-09	2.073	-3.7E-09	29.8683	2.3E-10	-181.15
4362	0	Extremo 2A	-1.4E-08	-29.177	-1.9E-09	29.869	-1.4E-09	-194.7
4362	0.5	Extremo 2A	-1.4E-08	-13.552	-1.9E-09	29.869	-4.5E-10	-184.017
4362	1	Extremo 2A	-1.4E-08	2.073	-1.9E-09	29.869	5.2E-10	-181.148
4363	0	Extremo 1A	-7.5E-09	-51.598	-8.9E-09	36.4631	-5.5E-09	-194.432
4363	0.5	Extremo 1A	-7.5E-09	-35.973	-8.9E-09	36.4631	-1.1E-09	-172.539
4363	1	Extremo 1A	-7.5E-09	-20.348	-8.9E-09	36.4631	3.4E-09	-158.459
4363	0	Extremo 2A	-1.2E-08	-51.598	-3.3E-09	36.4646	-1.9E-09	-194.43
4363	0.5	Extremo 2A	-1.2E-08	-35.973	-3.3E-09	36.4646	-2.6E-10	-172.538
4363	1	Extremo 2A	-1.2E-08	-20.348	-3.3E-09	36.4646	1.4E-09	-158.457
4364	0	Extremo 1A	-5E-09	-72.166	-1.1E-08	39.9876	-5.9E-09	-169.763
4364	0.5	Extremo 1A	-5E-09	-56.541	-1.1E-08	39.9876	-6.3E-10	-137.586
4364	1	Extremo 1A	-5E-09	-40.916	-1.1E-08	39.9876	4.6E-09	-113.221
4364	0	Extremo 2A	-8.1E-09	-72.166	-3.5E-09	39.9899	-1.9E-09	-169.762
4364	0.5	Extremo 2A	-8.1E-09	-56.541	-3.5E-09	39.9899	-1.3E-10	-137.585
4364	1	Extremo 2A	-8.1E-09	-40.916	-3.5E-09	39.9899	1.6E-09	-113.221
4365	0	Extremo 1A	-3.9E-09	17.97	6.5E-09	12.2129	3.1E-09	-137.478
4365	0.5	Extremo 1A	-3.9E-09	33.595	6.5E-09	12.2129	-1.8E-10	-150.37
4365	1	Extremo 1A	-3.9E-09	49.22	6.5E-09	12.2129	-3.4E-09	-171.073
4365	0	Extremo 2A	-7.4E-09	17.969	-2.3E-09	12.2124	-1.2E-09	-137.48
4365	0.5	Extremo 2A	-7.4E-09	33.594	-2.3E-09	12.2124	-7.7E-11	-150.371
4365	1	Extremo 2A	-7.4E-09	49.219	-2.3E-09	12.2124	1.1E-09	-171.074
4366	0	Extremo 1A	-5.9E-09	-0.368	5.3E-09	-0.2672	1.9E-09	-165.361
4366	0.5	Extremo 1A	-5.9E-09	15.257	5.3E-09	-0.2672	-7.2E-10	-169.083
4366	1	Extremo 1A	-5.9E-09	30.882	5.3E-09	-0.2672	-3.4E-09	-180.617
4366	0	Extremo 2A	-1.1E-08	-0.37	-2.4E-09	-0.2697	-1.2E-09	-165.361
4366	0.5	Extremo 2A	-1.1E-08	15.255	-2.4E-09	-0.2697	6.2E-11	-169.082
4366	1	Extremo 2A	-1.1E-08	30.88	-2.4E-09	-0.2697	1.3E-09	-180.616
4367	0	Extremo 1A	-7.2E-09	-13.328	1.6E-09	11.8207	-3.5E-10	-161.901
4367	0.5	Extremo 1A	-7.2E-09	2.297	1.6E-09	11.8207	-1.2E-09	-159.143
4367	1	Extremo 1A	-7.2E-09	17.922	1.6E-09	11.8207	-2E-09	-164.198
4367	0	Extremo 2A	-1.4E-08	-13.329	-1.9E-09	11.819	-7E-10	-161.897
4367	0.5	Extremo 2A	-1.4E-08	2.296	-1.9E-09	11.819	2.3E-10	-159.139
4367	1	Extremo 2A	-1.4E-08	17.921	-1.9E-09	11.819	1.2E-09	-164.193
4368	0	Extremo 1A	-7.3E-09	-15.528	-3.1E-09	42.2955	-2.7E-09	-165.122
4368	0.5	Extremo 1A	-7.3E-09	0.097	-3.1E-09	42.2955	-1.2E-09	-161.264
4368	1	Extremo 1A	-7.3E-09	15.722	-3.1E-09	42.2955	3.3E-10	-165.219
4368	0	Extremo 2A	-1.4E-08	-15.527	-8.2E-10	42.2969	-1.1E-10	-165.117
4368	0.5	Extremo 2A	-1.4E-08	0.098	-8.2E-10	42.2969	3E-10	-161.26
4368	1	Extremo 2A	-1.4E-08	15.723	-8.2E-10	42.2969	7.1E-10	-165.215
4369	0	Extremo 1A	-6.2E-09	-34.659	-6.8E-09	55.2928	-4.2E-09	-186.803
4369	0.5	Extremo 1A	-6.2E-09	-19.034	-6.8E-09	55.2928	-7.8E-10	-173.379
4369	1	Extremo 1A	-6.2E-09	-3.409	-6.8E-09	55.2928	2.6E-09	-167.769
4369	0	Extremo 2A	-1.2E-08	-34.658	2.6E-10	55.2958	3.9E-10	-186.8
4369	0.5	Extremo 2A	-1.2E-08	-19.033	2.6E-10	55.2958	2.7E-10	-173.378
4369	1	Extremo 2A	-1.2E-08	-3.408	2.6E-10	55.2958	1.4E-10	-167.768
4370	0	Extremo 1A	-4.2E-09	-65.588	-8E-09	47.5709	-4.4E-09	-178.163
4370	0.5	Extremo 1A	-4.2E-09	-49.963	-8E-09	47.5709	-4.5E-10	-149.276
4370	1	Extremo 1A	-4.2E-09	-34.338	-8E-09	47.5709	3.5E-09	-128.2
4370	0	Extremo 2A	-8E-09	-65.587	9.4E-10	47.5734	6.6E-10	-178.163
4370	0.5	Extremo 2A	-8E-09	-49.962	9.4E-10	47.5734	1.9E-10	-149.276
4370	1	Extremo 2A	-8E-09	-34.337	9.4E-10	47.5734	-2.9E-10	-128.202
4371	0	Extremo 1A	-3.3E-09	37.361	4.4E-09	30.8185	2E-09	-168.215
4371	0.5	Extremo 1A	-3.3E-09	52.986	4.4E-09	30.8185	-1.5E-10	-190.802
4371	1	Extremo 1A	-3.3E-09	68.611	4.4E-09	30.8185	-2.3E-09	-221.201
4371	0	Extremo 2A	-7.7E-09	37.362	-6.8E-09	30.8203	-3.4E-09	-168.221
4371	0.5	Extremo 2A	-7.7E-09	52.987	-6.8E-09	30.8203	-2.9E-11	-190.808
4371	1	Extremo 2A	-7.7E-09	68.612	-6.8E-09	30.8203	3.4E-09	-221.208
4372	0	Extremo 1A	-5E-09	-61.407	3.5E-09	-33.8735	1.2E-09	-214.893
4372	0.5	Extremo 1A	-5E-09	-45.782	3.5E-09	-33.8735	-5.2E-10	-188.096
4372	1	Extremo 1A	-5E-09	-30.157	3.5E-09	-33.8735	-2.3E-09	-169.111
4372	0	Extremo 2A	-1.2E-08	-61.416	-6.4E-09	-33.8796	-2.7E-09	-214.9
4372	0.5	Extremo 2A	-1.2E-08	-45.791	-6.4E-09	-33.8796	4.6E-10	-188.098
4372	1	Extremo 2A	-1.2E-08	-30.166	-6.4E-09	-33.8796	3.7E-09	-169.109
4373	0	Extremo 1A	-6.1E-09	-50.495	8.3E-10	-9.1978	-4.2E-10	-126.927
4373	0.5	Extremo 1A	-6.1E-09	-34.87	8.3E-10	-9.1978	-8.4E-10	-105.586
4373	1	Extremo 1A	-6.1E-09	-19.245	8.3E-10	-9.1978	-1.3E-09	-92.0569
4373	0	Extremo 2A	-1.4E-08	-50.502	-3.7E-09	-9.202	-8.9E-10	-126.921
4373	0.5	Extremo 2A	-1.4E-08	-34.877	-3.7E-09	-9.202	9.5E-10	-105.577
4373	1	Extremo 2A	-1.4E-08	-19.252	-3.7E-09	-9.202	2.8E-09	-92.0445
4374	0	Extremo 1A	-6.2E-09	31.973	-2.5E-09	59.9274	-2.1E-09	-86.8327
4374	0.5	Extremo 1A	-6.2E-09	47.598	-2.5E-09	59.9274	-8.4E-10	-106.725
4374	1	Extremo 1A	-6.2E-09	63.223	-2.5E-09	59.9274	4E-10	-134.43
4374	0	Extremo 2A	-1.5E-08	31.977	3.3E-10	59.9303	1.2E-09	-86.8199
4374	0.5	Extremo 2A	-1.5E-08	47.602	3.3E-10	59.9303	1.1E-09	-106.715
4374	1	Extremo 2A	-1.5E-08	63.227	3.3E-10	59.9303	9.1E-10	-134.422
4375	0	Extremo 1A	-5.2E-09	39.583	-5.1E-09	88.7527	-3.1E-09	-167.736
4375	0.5	Extremo 1A	-5.2E-09	55.208	-5.1E-09	88.7527	-5.3E-10	-191.433
4375	1	Extremo 1A	-5.2E-09	70.833	-5.1E-09	88.7527	2E-09	-222.944
4375	0	Extremo 2A	-1.3E-08	39.592	3.9E-09	88.7589	2.8E-09	-167.731
4375	0.5	Extremo 2A	-1.3E-08	55.217	3.9E-09	88.7589	8.1E-10	-191.433
4375	1	Extremo 2A	-1.3E-08	70.842	3.9E-09	88.7589	-1.1E-09	-222.947
4376	0	Extremo 1A	-3.5E-09	-73.661	-5.8E-09	35.5825	-3.2E-09	-223.61
4376	0.5	Extremo 1A	-3.5E-09	-58.036	-5.8E-09	35.5825	-3E-10	-190.686
4376	1	Extremo 1A	-3.5E-09	-42.411	-5.8E-09	35.5825	2.6E-09	-165.574
4376	0	Extremo 2A	-8.5E-09	-73.66	5.5E-09	35.5836	3.3E-09	-223.614
4376	0.5	Extremo 2A	-8.5E-09	-58.035	5.5E-09	35.5836	5.1E-10	-190.69
4376	1	Extremo 2A	-8.5E-09	-42.41	5.5E-09	35.5836	-2.2E-09	-165.578
4377	0	Extremo 1A	-2.9E-09	234.328	2.6E-09	82.362	1.2E-09	-176.014
4377	0.5	Extremo 1A	-2.9E-09	249.953	2.6E-09	82.362	-1.2E-10	-297.084
4377	1	Extremo 1A	-2.9E-09	265.578	2.6E-09	82.362	-1.4E-09	-425.967
4377	0	Extremo 2A	-8.5E-09	234.351	-1.2E-08	82.37	-5.8E-09	-176.021
4377	0.5	Extremo 2A	-8.5E-09	249.976	-1.2E-08	82.37	2.1E-11	-297.103
4377	1	Extremo 2A	-8.5E-09	265.601	-1.2E-08	82.37	5.8E-09	-425.997
4378	0	Extremo 1A	-4.3E-09	-334.823	1.9E-09	-94.5951	5.8E-10	-425.807
4378	0.5	Extremo 1A	-4.3E-09	-319.198	1.9E-09	-94.5951	-3.6E-10	-262.302
4378	1	Extremo 1A	-4.3E-09	-303.573	1.9E-09	-94.5951	-1.3E-09	-106.609
4378	0	Extremo 2A	-1.3E-08	-334.862	-1.1E-08	-94.6073	-4.5E-09	-425.838
4378	0.5	Extremo 2A	-1.3E-08	-319.237	-1.1E-08	-94.6073	8.8E-10	-262.313
4378	1	Extremo 2A	-1.3E-08	-303.612	-1.1E-08	-94.6073	6.2E-09	-106.601
4379	0	Extremo 1A	-5.3E-09	-158.357	1.3E-10	-35.2026	-4.8E-10	-70.441
4379	0.5	Extremo 1A	-5.3E-09	-142.732	1.3E-10	-35.2026	-5.5E-10	4.8315
4379	1	Extremo 1A	-5.3E-09	-127.107	1.3E-10	-35.2026	-6.1E-10	72.2915
4379	0	Extremo 2A	-1.6E-08	-158.377	-5.6E-09	-35.2088	-1.1E-09	-70.4303
4379	0.5	Extremo 2A	-1.6E-08	-142.752	-5.6E-09	-35.2088	1.7E-09	4.8518
4379	1	Extremo 2A	-1.6E-08	-127.127	-5.6E-09	-35.2088	4.5E-09	72.3213
4380	0	Extremo 1A	-5.4E-09	148.483	-2E-09	67.7671	-1.5E-09	85.2377
4380	0.5	Extremo 1A	-5.4E-09	164.108	-2E-09	67.7671	-5.3E-10	7.0899
4380	1	Extremo 1A	-5.4E-09	179.733	-2E-09	67.7671	4.7E-10	-78.8705
4380	0	Extremo 2A	-1.6E-08	148.498	1.5E-09	67.7715	2.7E-09	85.2676
4380	0.5	Extremo 2A	-1.6E-08	164.123	1.5E-09	67.7715	1.9E-09	7.1124
4380	1	Extremo 2A	-1.6E-08	179.748	1.5E-09	67.7715	1.1E-09	-78.8553
4381	0	Extremo 1A	-4.6E-09	333.925	-3.6E-09	133.56	-2.1E-09	-88.8325
4381	0.5	Extremo 1A	-4.6E-09	349.55	-3.6E-09	133.56	-3.2E-10	-259.701
4381	1	Extremo 1A	-4.6E-09	365.175	-3.6E-09	133.56	1.5E-09	-438.383
4381	0	Extremo 2A	-1.4E-08	333.962	7.8E-09	133.571	5.3E-09	-88.8193

4381	0.5	Extremo 2A	-1.4E-08	349.587	7.8E-09	133.571	1.4E-09	-259.706
4381	1	Extremo 2A	-1.4E-08	365.212	7.8E-09	133.571	-2.5E-09	-438.406
4382	0	Extremo 1A	-3.1E-09	-226.422	-4E-09	-24.0976	-2.2E-09	-412.019
4382	0.5	Extremo 1A	-3.1E-09	-210.797	-4E-09	-24.0976	-1.7E-10	-302.714
4382	1	Extremo 1A	-3.1E-09	-195.172	-4E-09	-24.0976	1.8E-09	-201.221
4382	0	Extremo 2A	-9.4E-09	-226.436	1E-08	-24.1022	6.1E-09	-412.04
4382	0.5	Extremo 2A	-9.4E-09	-210.811	1E-08	-24.1022	8.7E-10	-302.728
4382	1	Extremo 2A	-9.4E-09	-195.186	1E-08	-24.1022	-4.4E-09	-201.229
4383	0	Extremo 1A	-2.6E-09	1029.64	9.3E-10	0.00064	3.6E-10	63.2486
4383	0.5	Extremo 1A	-2.6E-09	1045.27	9.3E-10	0.00064	-1E-10	-455.478
4383	1	Extremo 1A	-2.6E-09	1060.89	9.3E-10	0.00064	-5.7E-10	-982.017
4383	0	Extremo 2A	-9.8E-09	1029.75	-1.7E-08	0.00039	-8.5E-09	63.2676
4383	0.5	Extremo 2A	-9.8E-09	1045.38	-1.7E-08	0.00039	7E-11	-455.514
4383	1	Extremo 2A	-9.8E-09	1061	-1.7E-08	0.00039	8.6E-09	-982.109
4384	0	Extremo 1A	-4E-09	-1196.57	4.5E-10	0.0012	1.6E-11	-986.284
4384	0.5	Extremo 1A	-4E-09	-1180.94	4.5E-10	0.0012	-2.1E-10	-391.906
4384	1	Extremo 1A	-4E-09	-1165.32	4.5E-10	0.0012	-4.4E-10	194.661
4384	0	Extremo 2A	-1.5E-08	-1196.7	-1.6E-08	0.00072	-6.4E-09	-986.378
4384	0.5	Extremo 2A	-1.5E-08	-1181.08	-1.6E-08	0.00072	1.4E-09	-391.932
4384	1	Extremo 2A	-1.5E-08	-1165.45	-1.6E-08	0.00072	9.2E-09	194.701
4385	0	Extremo 1A	-4.9E-09	-265.945	-4.9E-10	0.0013	-5.3E-10	21.9084
4385	0.5	Extremo 1A	-4.9E-09	-250.32	-4.9E-10	0.0013	-2.9E-10	150.975
4385	1	Extremo 1A	-4.9E-09	-234.695	-4.9E-10	0.0013	-4.1E-11	272.229
4385	0	Extremo 2A	-1.8E-08	-265.976	-7.9E-09	0.00079	-1.4E-09	21.9283
4385	0.5	Extremo 2A	-1.8E-08	-250.351	-7.9E-09	0.00079	2.6E-09	151.01
4385	1	Extremo 2A	-1.8E-08	-234.726	-7.9E-09	0.00079	6.6E-09	272.28
4386	0	Extremo 1A	-4.9E-09	258.816	-1.6E-09	0.0014	-1E-09	289.462
4386	0.5	Extremo 1A	-4.9E-09	274.441	-1.6E-09	0.0014	-2.5E-10	156.148
4386	1	Extremo 1A	-4.9E-09	290.066	-1.6E-09	0.0014	5.3E-10	15.0216
4386	0	Extremo 2A	-1.9E-08	258.841	2.9E-09	0.00087	4.3E-09	289.513
4386	0.5	Extremo 2A	-1.9E-08	274.466	2.9E-09	0.00087	2.9E-09	156.186
4386	1	Extremo 2A	-1.9E-08	290.091	2.9E-09	0.00087	1.4E-09	15.0466
4387	0	Extremo 1A	-4.2E-09	1211.96	-2.3E-09	0.002	-1.3E-09	226.031
4387	0.5	Extremo 1A	-4.2E-09	1227.59	-2.3E-09	0.002	-1.3E-10	-383.856
4387	1	Extremo 1A	-4.2E-09	1243.21	-2.3E-09	0.002	1E-09	-1001.56
4387	0	Extremo 2A	-1.6E-08	1212.08	1.2E-08	0.0012	8.2E-09	226.075
4387	0.5	Extremo 2A	-1.6E-08	1227.71	1.2E-08	0.0012	2.1E-09	-383.872
4387	1	Extremo 2A	-1.6E-08	1243.33	1.2E-08	0.0012	-4E-09	-1001.63
4388	0	Extremo 1A	-2.8E-09	-946.448	-2.3E-09	0.0053	-1.2E-09	-951.946
4388	0.5	Extremo 1A	-2.8E-09	-930.823	-2.3E-09	0.0053	-6E-11	-482.629
4388	1	Extremo 1A	-2.8E-09	-915.198	-2.3E-09	0.0053	1.1E-09	-21.1237
4388	0	Extremo 2A	-1.1E-08	-946.53	1.6E-08	0.0034	9.3E-09	-952.019
4388	0.5	Extremo 2A	-1.1E-08	-930.905	1.6E-08	0.0034	1.3E-09	-482.66
4388	1	Extremo 2A	-1.1E-08	-915.28	1.6E-08	0.0034	-6.8E-09	-21.1138
4389	0	Extremo 1A	-2.5E-09	234.328	-6E-10	-82.3607	-3.8E-10	-176.014
4389	0.5	Extremo 1A	-2.5E-09	249.953	-6E-10	-82.3607	-7.9E-11	-297.084
4389	1	Extremo 1A	-2.5E-09	265.578	-6E-10	-82.3607	2.2E-10	-425.967
4389	0	Extremo 2A	-1.2E-08	234.351	-2.3E-08	-82.3692	-1.2E-08	-176.021
4389	0.5	Extremo 2A	-1.2E-08	249.976	-2.3E-08	-82.3692	1.2E-10	-297.103
4389	1	Extremo 2A	-1.2E-08	265.601	-2.3E-08	-82.3692	1.2E-08	-425.997
4390	0	Extremo 1A	-3.9E-09	-334.823	-8.8E-10	94.5975	-5.1E-10	-425.807
4390	0.5	Extremo 1A	-3.9E-09	-319.198	-8.8E-10	94.5975	-7.2E-11	-262.302
4390	1	Extremo 1A	-3.9E-09	-303.573	-8.8E-10	94.5975	3.7E-10	-106.609
4390	0	Extremo 2A	-1.8E-08	-334.862	-2.1E-08	94.6087	-8.8E-09	-425.838
4390	0.5	Extremo 2A	-1.8E-08	-319.237	-2.1E-08	94.6087	1.9E-09	-262.313
4390	1	Extremo 2A	-1.8E-08	-303.612	-2.1E-08	94.6087	1.3E-08	-106.601
4391	0	Extremo 1A	-4.7E-09	-158.357	-1.1E-09	35.2051	-5.8E-10	-70.4409
4391	0.5	Extremo 1A	-4.7E-09	-142.732	-1.1E-09	35.2051	-4E-11	4.8316
4391	1	Extremo 1A	-4.7E-09	-127.107	-1.1E-09	35.2051	5E-10	72.2916
4391	0	Extremo 2A	-2.2E-08	-158.377	-1.1E-08	35.2103	-1.7E-09	-70.4302
4391	0.5	Extremo 2A	-2.2E-08	-142.752	-1.1E-08	35.2103	3.6E-09	4.8518
4391	1	Extremo 2A	-2.2E-08	-127.127	-1.1E-08	35.2103	8.9E-09	72.3214
4392	0	Extremo 1A	-4.8E-09	148.483	-1.1E-09	-67.7643	-5.7E-10	85.2378
4392	0.5	Extremo 1A	-4.8E-09	164.108	-1.1E-09	-67.7643	4.6E-12	7.0899
4392	1	Extremo 1A	-4.8E-09	179.733	-1.1E-09	-67.7643	5.8E-10	-78.8704
4392	0	Extremo 2A	-2.3E-08	148.498	4.4E-09	-67.7697	6.2E-09	85.2676
4392	0.5	Extremo 2A	-2.3E-08	164.123	4.4E-09	-67.7697	4E-09	7.1124
4392	1	Extremo 2A	-2.3E-08	179.748	4.4E-09	-67.7697	1.8E-09	-78.8553
4393	0	Extremo 1A	-4E-09	333.925	-1.1E-09	-133.556	-4.8E-10	-88.8324
4393	0.5	Extremo 1A	-4E-09	349.55	-1.1E-09	-133.556	4.7E-11	-259.701
4393	1	Extremo 1A	-4E-09	365.175	-1.1E-09	-133.556	5.8E-10	-438.383
4393	0	Extremo 2A	-1.9E-08	333.962	1.7E-08	-133.569	1.2E-08	-88.8192
4393	0.5	Extremo 2A	-1.9E-08	349.587	1.7E-08	-133.569	2.9E-09	-259.706
4393	1	Extremo 2A	-1.9E-08	365.212	1.7E-08	-133.569	-5.8E-09	-438.406
4394	0	Extremo 1A	-2.7E-09	-226.422	-8E-10	24.1083	-3.5E-10	-412.019
4394	0.5	Extremo 1A	-2.7E-09	-210.797	-8E-10	24.1083	4.7E-11	-302.714
4394	1	Extremo 1A	-2.7E-09	-195.172	-8E-10	24.1083	4.4E-10	-201.221
4394	0	Extremo 2A	-1.3E-08	-226.436	2.3E-08	24.1089	1.3E-08	-412.04
4394	0.5	Extremo 2A	-1.3E-08	-210.811	2.3E-08	24.1089	1.8E-09	-302.728
4394	1	Extremo 2A	-1.3E-08	-195.186	2.3E-08	24.1089	-9.6E-09	-201.229
4395	0	Extremo 1A	-2.6E-09	37.361	-2.1E-09	-30.8173	-1.1E-09	-168.215
4395	0.5	Extremo 1A	-2.6E-09	52.986	-2.1E-09	-30.8173	-5.9E-11	-190.802
4395	1	Extremo 1A	-2.6E-09	68.611	-2.1E-09	-30.8173	1E-09	-221.201
4395	0	Extremo 2A	-1.4E-08	37.362	-3.1E-08	-30.8195	-1.5E-08	-168.221
4395	0.5	Extremo 2A	-1.4E-08	52.987	-3.1E-08	-30.8195	1.8E-10	-190.808
4395	1	Extremo 2A	-1.4E-08	68.612	-3.1E-08	-30.8195	1.6E-08	-221.208
4396	0	Extremo 1A	-3.9E-09	-61.407	-2.2E-09	33.8758	-1E-09	-214.893
4396	0.5	Extremo 1A	-3.9E-09	-45.782	-2.2E-09	33.8758	6.6E-11	-188.095
4396	1	Extremo 1A	-3.9E-09	-30.157	-2.2E-09	33.8758	1.2E-09	-169.111
4396	0	Extremo 2A	-2.2E-08	-61.416	-2.8E-08	33.881	-1.2E-08	-214.9
4396	0.5	Extremo 2A	-2.2E-08	-45.791	-2.8E-08	33.881	2.6E-09	-188.098
4396	1	Extremo 2A	-2.2E-08	-30.166	-2.8E-08	33.881	1.7E-08	-169.109
4397	0	Extremo 1A	-4.8E-09	-50.495	-1.7E-09	9.2004	-6.3E-10	-126.927
4397	0.5	Extremo 1A	-4.8E-09	-34.87	-1.7E-09	9.2004	2E-10	-105.586
4397	1	Extremo 1A	-4.8E-09	-19.245	-1.7E-09	9.2004	1E-09	-92.0567
4397	0	Extremo 2A	-2.7E-08	-50.502	-1.4E-08	9.2035	-2.1E-09	-126.921
4397	0.5	Extremo 2A	-2.7E-08	-34.877	-1.4E-08	9.2035	4.9E-09	-105.577
4397	1	Extremo 2A	-2.7E-08	-19.252	-1.4E-08	9.2035	1.2E-08	-92.0444
4398	0	Extremo 1A	-4.9E-09	31.973	-7.4E-10	-59.9246	-1.1E-10	-86.8325
4398	0.5	Extremo 1A	-4.9E-09	47.598	-7.4E-10	-59.9246	2.6E-10	-106.725
4398	1	Extremo 1A	-4.9E-09	63.223	-7.4E-10	-59.9246	6.3E-10	-134.43
4398	0	Extremo 2A	-2.8E-08	31.977	6.2E-09	-59.9286	8.4E-09	-86.8198
4398	0.5	Extremo 2A	-2.8E-08	47.602	6.2E-09	-59.9286	5.3E-09	-106.715
4398	1	Extremo 2A	-2.8E-08	63.227	6.2E-09	-59.9286	2.2E-09	-134.422
4399	0	Extremo 1A	-4.1E-09	39.583	1.8E-10	-88.7487	3.1E-10	-167.735
4399	0.5	Extremo 1A	-4.1E-09	55.208	1.8E-10	-88.7487	2.3E-10	-191.433
4399	1	Extremo 1A	-4.1E-09	70.833	1.8E-10	-88.7487	1.4E-10	-222.944
4399	0	Extremo 2A	-2.3E-08	39.592	2.4E-08	-88.7564	1.6E-08	-167.73
4399	0.5	Extremo 2A	-2.3E-08	55.217	2.4E-08	-88.7564	3.8E-09	-191.433
4399	1	Extremo 2A	-2.3E-08	70.842	2.4E-08	-88.7564	-8E-09	-222.947
4400	0	Extremo 1A	-2.8E-09	-73.661	7.4E-10	-35.5718	5.2E-10	-223.61
4400	0.5	Extremo 1A	-2.8E-09	-58.036	7.4E-10	-35.5718	1.5E-10	-190.686
4400	1	Extremo 1A	-2.8E-09	-42.411	7.4E-10	-35.5718	-2.2E-10	-165.574
4400	0	Extremo 2A	-1.6E-08	-73.66	3.1E-08	-35.5768	1.8E-08	-223.614
4400	0.5	Extremo 2A	-1.6E-08	-58.035	3.1E-08	-35.5768	2.4E-09	-190.69
4400	1	Extremo 2A	-1.6E-08	-42.41	3.1E-08	-35.5768	-1.3E-08	-165.578
4401	0	Extremo 1A	-2.8E-09	17.97	-3.7E-09	-12.2117	-1.9E-09	-137.478
4401	0.5	Extremo 1A	-2.8E-09	33.595	-3.7E-09	-12.2117	-3.9E-11	-150.369
4401	1	Extremo 1A	-2.8E-09	49.22	-3.7E-09	-12.2117	1.8E-09	-171.073
4401	0	Extremo 2A	-1.7E-08	17.969	-4.1E-08	-12.2117	-2E-08	-137.48
4401	0.5	Extremo 2A	-1.7E-08	33.594	-4.1E-08	-12.2117	2.4E-10	-150.371
4401	1	Extremo 2A	-1.7E-08	49.219	-4.1E-08	-12.2117	2.1E-08	-171.074
4402	0	Extremo 1A	-4.3E-09	-0.368	-3.6E-09	0.2694	-1.6E-09	-165.36
4402	0.5	Extremo 1A	-4.3E-09	15.257	-3.6E-09	0.2694	2.1E-10	-169.082
4402	1	Extremo 1A	-4.3E-09	30.882	-3.6E-09	0.2694	2E-09	-180.617
4402	0	Extremo 2A	-2.7E-08	-0.37	-3.7E-08	0.2711	-1.5E-08	-165.361
4402	0.5	Extremo 2A	-2.7E-08	15.255	-3.7E-08	0.2711	3.4E-09	-169.082
4402	1	Extremo 2A	-2.7E-08	30.88	-3.7E-08	0.2711	2.2E-08	-180.616
4403	0	Extremo 1A	-5.2E-09	-13.328	-2.3E-09	-11.8182	-6.8E-10	-161.9
4403	0.5	Extremo 1A	-5.2E-09	2.297	-2.3E-09	-11.8182	4.6E-10	-159.143
4403	1	Extremo 1A	-5.2E-09	17.922	-2.3E-09	-11.8182	1.6E-09	-164.197
4403	0	Extremo 2A	-3.3E-08	-13.329	-1.8E-08	-11.8174	-2.6E-09	-161.897
4403	0.5	Extremo 2A	-3.3E-08	2.296	-1.8E-08	-11.8174	6.4E-09	-159.139
4403	1	Extremo 2A	-3.3E-08	17.921	-1.8E-08	-11.8174	1.5E-08	-164.193
4404	0	Extremo 1A	-5.3E-09	-15.528	-3.1E-10	-42.2927	3.8E-10	-165.121
4404	0.5	Extremo 1A	-5.3E-09	0.097	-3.1E-10	-42.2927	5.4E-10	-161.264
4404	1	Extremo 1A	-5.3E-09	15.722	-3.1E-10	-42.2927	6.9E-10	-165.219
4404	0	Extremo 2A	-3.4E-08	-15.527	8.4E-09	-42.2951	1.1E-08	-165.117
4404	0.5	Extremo 2A	-3.4E-08	0.098	8.4E-09	-42.2951	7E-09	-161.259
4404	1	Extremo 2A	-3.4E-08	15.723	8.4E-09	-42.2951	2.8E-09	-165.215
4405	0	Extremo 1A	-4.5E-09	-34.659	1.5E-09	-55.2889	1.2E-09	-186.803
4405	0.5	Extremo 1A	-4.5E-09	-19.034	1.5E-09	-55.2889	4.1E-10	-173.379
4405	1	Extremo 1A	-4.5E-09	-3.409	1.5E-09	-55.2889	-3.3E-10	-167.768
4405	0	Extremo 2A	-2.9E-08	-34.658	3.1E-08	-55.2933	2.1E-08	-186.8

4405	0.5	Extremo 2A	-2.9E-08	-19.033	3.1E-08	-55.2933	5E-09	-173.378
4405	1	Extremo 2A	-2.9E-08	-3.408	3.1E-08	-55.2933	-1.1E-08	-167.767
4406	0	Extremo 1A	-3E-09	-65.588	2.4E-09	-47.5602	1.5E-09	-178.163
4406	0.5	Extremo 1A	-3E-09	-49.963	2.4E-09	-47.5602	2.7E-10	-149.275
4406	1	Extremo 1A	-3E-09	-34.338	2.4E-09	-47.5602	-9.2E-10	-128.2
4406	0	Extremo 2A	-2E-08	-65.587	4E-08	-47.5666	2.3E-08	-178.163
4406	0.5	Extremo 2A	-2E-08	-49.962	4E-08	-47.5666	3.1E-09	-149.276
4406	1	Extremo 2A	-2E-08	-34.337	4E-08	-47.5666	-1.7E-08	-128.202
4407	0	Extremo 1A	-3.2E-09	22.779	-5.5E-09	-9.3822	-2.8E-09	-124.692
4407	0.5	Extremo 1A	-3.2E-09	38.404	-5.5E-09	-9.3822	-1.7E-11	-139.988
4407	1	Extremo 1A	-3.2E-09	54.029	-5.5E-09	-9.3822	2.7E-09	-163.097
4407	0	Extremo 2A	-2.2E-08	22.779	-5.3E-08	-9.382	-2.6E-08	-124.693
4407	0.5	Extremo 2A	-2.2E-08	38.404	-5.3E-08	-9.382	3E-10	-139.988
4407	1	Extremo 2A	-2.2E-08	54.029	-5.3E-08	-9.382	2.7E-08	-163.097
4408	0	Extremo 1A	-4.8E-09	9.601	-5.2E-09	-10.947	-2.2E-09	-161.368
4408	0.5	Extremo 1A	-4.8E-09	25.226	-5.2E-09	-10.947	3.7E-10	-170.075
4408	1	Extremo 1A	-4.8E-09	40.851	-5.2E-09	-10.947	3E-09	-186.594
4408	0	Extremo 2A	-3.3E-08	9.601	-4.8E-08	-10.9468	-1.9E-08	-161.367
4408	0.5	Extremo 2A	-3.3E-08	25.226	-4.8E-08	-10.9468	4.4E-09	-170.074
4408	1	Extremo 2A	-3.3E-08	40.851	-4.8E-08	-10.9468	2.8E-08	-186.593
4409	0	Extremo 1A	-5.9E-09	-8.086	-3E-09	-18.0388	-7.5E-10	-182.62
4409	0.5	Extremo 1A	-5.9E-09	7.539	-3E-09	-18.0388	7.5E-10	-182.483
4409	1	Extremo 1A	-5.9E-09	23.164	-3E-09	-18.0388	2.2E-09	-190.159
4409	0	Extremo 2A	-4.1E-08	-8.087	-2.3E-08	-18.0392	-3.3E-09	-182.618
4409	0.5	Extremo 2A	-4.1E-08	7.538	-2.3E-08	-18.0392	8.3E-09	-182.481
4409	1	Extremo 2A	-4.1E-08	23.163	-2.3E-08	-18.0392	2E-08	-190.157
4410	0	Extremo 1A	-6E-09	-29.177	1.5E-10	-29.8655	9.1E-10	-194.701
4410	0.5	Extremo 1A	-6E-09	-13.552	1.5E-10	-29.8655	8.4E-10	-184.019
4410	1	Extremo 1A	-6E-09	2.073	1.5E-10	-29.8655	7.6E-10	-181.149
4410	0	Extremo 2A	-4.3E-08	-29.177	1.1E-08	-29.8672	1.5E-08	-194.699
4410	0.5	Extremo 2A	-4.3E-08	-13.552	1.1E-08	-29.8672	9.1E-09	-184.017
4410	1	Extremo 2A	-4.3E-08	2.073	1.1E-08	-29.8672	3.5E-09	-181.147
4411	0	Extremo 1A	-5.1E-09	-51.598	2.9E-09	-36.459	2.1E-09	-194.431
4411	0.5	Extremo 1A	-5.1E-09	-35.973	2.9E-09	-36.459	6.2E-10	-172.539
4411	1	Extremo 1A	-5.1E-09	-20.348	2.9E-09	-36.459	-8.4E-10	-158.458
4411	0	Extremo 2A	-3.7E-08	-51.598	4.1E-08	-36.4621	2.7E-08	-194.43
4411	0.5	Extremo 2A	-3.7E-08	-35.973	4.1E-08	-36.4621	6.5E-09	-172.537
4411	1	Extremo 2A	-3.7E-08	-20.348	4.1E-08	-36.4621	-1.4E-08	-158.457
4412	0	Extremo 1A	-3.5E-09	-72.166	4.2E-09	-39.9767	2.5E-09	-169.762
4412	0.5	Extremo 1A	-3.5E-09	-56.541	4.2E-09	-39.9767	3.9E-10	-137.586
4412	1	Extremo 1A	-3.5E-09	-40.916	4.2E-09	-39.9767	-1.7E-09	-113.221
4412	0	Extremo 2A	-2.5E-08	-72.166	5.3E-08	-39.983	3E-08	-169.762
4412	0.5	Extremo 2A	-2.5E-08	-56.541	5.3E-08	-39.983	4.1E-09	-137.585
4412	1	Extremo 2A	-2.5E-08	-40.916	5.3E-08	-39.983	-2.2E-08	-113.221
4413	0	Extremo 1A	-3.7E-09	25.711	-7.5E-09	-8.3754	-3.8E-09	-122.444
4413	0.5	Extremo 1A	-3.7E-09	41.336	-7.5E-09	-8.3754	7.1E-12	-139.205
4413	1	Extremo 1A	-3.7E-09	56.961	-7.5E-09	-8.3754	3.8E-09	-163.78
4413	0	Extremo 2A	-2.7E-08	25.711	-6.7E-08	-8.3753	-3.3E-08	-122.444
4413	0.5	Extremo 2A	-2.7E-08	41.336	-6.7E-08	-8.3753	3.5E-10	-139.205
4413	1	Extremo 2A	-2.7E-08	56.961	-6.7E-08	-8.3753	3.4E-08	-163.78
4414	0	Extremo 1A	-5.7E-09	9.662	-7E-09	-11.8679	-2.9E-09	-165.784
4414	0.5	Extremo 1A	-5.7E-09	25.287	-7E-09	-11.8679	5.5E-10	-174.521
4414	1	Extremo 1A	-5.7E-09	40.912	-7E-09	-11.8679	4.1E-09	-191.07
4414	0	Extremo 2A	-4.2E-08	9.662	-6.1E-08	-11.8683	-2.5E-08	-165.783
4414	0.5	Extremo 2A	-4.2E-08	25.287	-6.1E-08	-11.8683	5.6E-09	-174.52
4414	1	Extremo 2A	-4.2E-08	40.912	-6.1E-08	-11.8683	3.6E-08	-191.07
4415	0	Extremo 1A	-7E-09	-9.96	-3.8E-09	-15.944	-8.2E-10	-193.795
4415	0.5	Extremo 1A	-7E-09	5.665	-3.8E-09	-15.944	1.1E-09	-192.721
4415	1	Extremo 1A	-7E-09	21.29	-3.8E-09	-15.944	3E-09	-199.46
4415	0	Extremo 2A	-5.2E-08	-9.96	-3E-08	-15.9448	-4.3E-09	-193.794
4415	0.5	Extremo 2A	-5.2E-08	5.665	-3E-08	-15.9448	1.1E-08	-192.721
4415	1	Extremo 2A	-5.2E-08	21.29	-3E-08	-15.9448	2.6E-08	-199.459
4416	0	Extremo 1A	-7.1E-09	-32.872	6.8E-10	-20.6192	1.5E-09	-205.859
4416	0.5	Extremo 1A	-7.1E-09	-17.247	6.8E-10	-20.6192	1.2E-09	-193.329
4416	1	Extremo 1A	-7.1E-09	-1.622	6.8E-10	-20.6192	8.5E-10	-188.612
4416	0	Extremo 2A	-5.4E-08	-32.872	1.4E-08	-20.6207	1.9E-08	-205.858
4416	0.5	Extremo 2A	-5.4E-08	-17.247	1.4E-08	-20.6207	1.2E-08	-193.328
4416	1	Extremo 2A	-5.4E-08	-1.622	1.4E-08	-20.6207	4.5E-09	-188.611
4417	0	Extremo 1A	-6E-09	-55.416	4.6E-09	-24.019	3.2E-09	-198.543
4417	0.5	Extremo 1A	-6E-09	-39.791	4.6E-09	-24.019	8.7E-10	-174.741
4417	1	Extremo 1A	-6E-09	-24.166	4.6E-09	-24.019	-1.4E-09	-158.752
4417	0	Extremo 2A	-4.6E-08	-55.416	5.3E-08	-24.0216	3.5E-08	-198.542
4417	0.5	Extremo 2A	-4.6E-08	-39.791	5.3E-08	-24.0216	8.4E-09	-174.741
4417	1	Extremo 2A	-4.6E-08	-24.166	5.3E-08	-24.0216	-1.8E-08	-158.752
4418	0	Extremo 1A	-4.1E-09	-75.559	6.3E-09	-28.454	3.7E-09	-169.018
4418	0.5	Extremo 1A	-4.1E-09	-59.934	6.3E-09	-28.454	5.4E-10	-135.145
4418	1	Extremo 1A	-4.1E-09	-44.309	6.3E-09	-28.454	-2.6E-09	-109.085
4418	0	Extremo 2A	-3.1E-08	-75.558	6.8E-08	-28.46	3.9E-08	-169.018
4418	0.5	Extremo 2A	-3.1E-08	-59.933	6.8E-08	-28.46	5.2E-09	-135.145
4418	1	Extremo 2A	-3.1E-08	-44.308	6.8E-08	-28.46	-2.9E-08	-109.084
4419	0	Extremo 1A	-4.5E-09	26.486	-1E-08	-5.8765	-5E-09	-123.207
4419	0.5	Extremo 1A	-4.5E-09	42.111	-1E-08	-5.8765	3.4E-11	-140.356
4419	1	Extremo 1A	-4.5E-09	57.736	-1E-08	-5.8765	5E-09	-165.318
4419	0	Extremo 2A	-3.4E-08	26.486	-8.6E-08	-5.8765	-4.3E-08	-123.207
4419	0.5	Extremo 2A	-3.4E-08	42.111	-8.6E-08	-5.8765	4.1E-10	-140.356
4419	1	Extremo 2A	-3.4E-08	57.736	-8.6E-08	-5.8765	4.3E-08	-165.318
4420	0	Extremo 1A	-6.9E-09	8.557	-9.2E-09	-8.3327	-3.8E-09	-169.674
4420	0.5	Extremo 1A	-6.9E-09	24.182	-9.2E-09	-8.3327	7.7E-10	-177.858
4420	1	Extremo 1A	-6.9E-09	39.807	-9.2E-09	-8.3327	5.4E-09	-193.855
4420	0	Extremo 2A	-5.3E-08	8.557	-7.8E-08	-8.3333	-3.2E-08	-169.674
4420	0.5	Extremo 2A	-5.3E-08	24.182	-7.8E-08	-8.3333	7.1E-09	-177.858
4420	1	Extremo 2A	-5.3E-08	39.807	-7.8E-08	-8.3333	4.6E-08	-193.855
4421	0	Extremo 1A	-8.4E-09	-11.865	-4.8E-09	-10.3973	-9.2E-10	-199.333
4421	0.5	Extremo 1A	-8.4E-09	3.76	-4.8E-09	-10.3973	1.5E-09	-197.307
4421	1	Extremo 1A	-8.4E-09	19.385	-4.8E-09	-10.3973	3.9E-09	-203.093
4421	0	Extremo 2A	-6.6E-08	-11.865	-3.8E-08	-10.3983	-5.5E-09	-199.333
4421	0.5	Extremo 2A	-6.6E-08	3.76	-3.8E-08	-10.3983	1.4E-08	-197.307
4421	1	Extremo 2A	-6.6E-08	19.385	-3.8E-08	-10.3983	3.3E-08	-203.093
4422	0	Extremo 1A	-8.6E-09	-34.154	1.3E-09	-12.2942	2.3E-09	-210.377
4422	0.5	Extremo 1A	-8.6E-09	-18.529	1.3E-09	-12.2942	1.6E-09	-197.206
4422	1	Extremo 1A	-8.6E-09	-2.904	1.3E-09	-12.2942	9.6E-10	-191.848
4422	0	Extremo 2A	-6.8E-08	-34.154	1.8E-08	-12.2956	2.4E-08	-210.377
4422	0.5	Extremo 2A	-6.8E-08	-18.529	1.8E-08	-12.2956	1.5E-08	-197.206
4422	1	Extremo 2A	-6.8E-08	-2.904	1.8E-08	-12.2956	5.8E-09	-191.848
4423	0	Extremo 1A	-7.3E-09	-56.373	6.6E-09	-13.9143	4.4E-09	-200.708
4423	0.5	Extremo 1A	-7.3E-09	-40.748	6.6E-09	-13.9143	1.2E-09	-176.428
4423	1	Extremo 1A	-7.3E-09	-25.123	6.6E-09	-13.9143	-2.1E-09	-159.96
4423	0	Extremo 2A	-5.8E-08	-56.373	6.7E-08	-13.9166	4.5E-08	-200.708
4423	0.5	Extremo 2A	-5.8E-08	-40.748	6.7E-08	-13.9166	1.1E-08	-176.427
4423	1	Extremo 2A	-5.8E-08	-25.123	6.7E-08	-13.9166	-2.3E-08	-159.96
4424	0	Extremo 1A	-4.9E-09	-76.73	8.8E-09	-16.8489	5.1E-09	-169.408
4424	0.5	Extremo 1A	-4.9E-09	-61.105	8.8E-09	-16.8489	7.2E-10	-134.949
4424	1	Extremo 1A	-4.9E-09	-45.48	8.8E-09	-16.8489	-3.7E-09	-108.303
4424	0	Extremo 2A	-4E-08	-76.73	8.8E-08	-16.8547	5.1E-08	-169.408
4424	0.5	Extremo 2A	-4E-08	-61.105	8.8E-08	-16.8547	6.8E-09	-134.949
4424	1	Extremo 2A	-4E-08	-45.48	8.8E-08	-16.8547	-3.7E-08	-108.303
4425	0	Extremo 1A	-5.5E-09	26.585	-1.3E-08	-2.1037	-6.4E-09	-123.987
4425	0.5	Extremo 1A	-5.5E-09	42.21	-1.3E-08	-2.1037	6.5E-11	-141.186
4425	1	Extremo 1A	-5.5E-09	57.835	-1.3E-08	-2.1037	6.5E-09	-166.197
4425	0	Extremo 2A	-4.3E-08	26.586	-1.1E-07	-2.1037	-5.4E-08	-123.987
4425	0.5	Extremo 2A	-4.3E-08	42.211	-1.1E-07	-2.1037	4.5E-10	-141.186
4425	1	Extremo 2A	-4.3E-08	57.836	-1.1E-07	-2.1037	5.5E-08	-166.197
4426	0	Extremo 1A	-8.4E-09	7.9	-1.2E-08	-2.9464	-4.9E-09	-171.612
4426	0.5	Extremo 1A	-8.4E-09	23.525	-1.2E-08	-2.9464	1E-09	-179.468
4426	1	Extremo 1A	-8.4E-09	39.15	-1.2E-08	-2.9464	6.9E-09	-195.137
4426	0	Extremo 2A	-6.7E-08	7.9	-1E-07	-2.947	-4.1E-08	-171.613
4426	0.5	Extremo 2A	-6.7E-08	23.525	-1E-07	-2.947	9E-09	-179.469
4426	1	Extremo 2A	-6.7E-08	39.15	-1E-07	-2.947	5.9E-08	-195.137
4427	0	Extremo 1A	-1E-08	-12.78	-6E-09	-3.5732	-1.1E-09	-201.599
4427	0.5	Extremo 1A	-1E-08	2.845	-6E-09	-3.5732	2E-09	-199.115
4427	1	Extremo 1A	-1E-08	18.47	-6E-09	-3.5732	5E-09	-204.444
4427	0	Extremo 2A	-8.3E-08	-12.78	-4.9E-08	-3.5742	-7.2E-09	-201.6
4427	0.5	Extremo 2A	-8.3E-08	2.845	-4.9E-08	-3.5742	1.7E-08	-199.116
4427	1	Extremo 2A	-8.3E-08	18.47	-4.9E-08	-3.5742	4.2E-08	-204.444
4428	0	Extremo 1A	-1.1E-08	-34.66	2.1E-09	-4.099	3.2E-09	-212.082
4428	0.5	Extremo 1A	-1.1E-08	-19.035	2.1E-09	-4.099	2.1E-09	-198.658
4428	1	Extremo 1A	-1.1E-08	-3.41	2.1E-09	-4.099	1.1E-09	-193.047
4428	0	Extremo 2A	-8.6E-08	-34.66	2.3E-08	-4.1004	3.1E-08	-212.082
4428	0.5	Extremo 2A	-8.6E-08	-19.035	2.3E-08	-4.1004	1.9E-08	-198.658
4428	1	Extremo 2A	-8.6E-08	-3.41	2.3E-08	-4.1004	7.6E-09	-193.047
4429	0	Extremo 1A	-9E-09	-56.651	9E-09	-4.5781	6E-09	-201.629
4429	0.5	Extremo 1A	-9E-09	-41.026	9E-09	-4.5781	1.5E-09	-177.21
4429	1	Extremo 1A	-9E-09	-25.401	9E-09	-4.5781	-3E-09	-160.603
4429	0	Extremo 2A	-7.4E-08	-56.651	8.6E-08	-4.5804	5.7E-08	-201.629

4429	0.5	Extremo 2A	-7.4E-08	-41.026	8.6E-08	-4.5804	1.4E-08	-177.21
4429	1	Extremo 2A	-7.4E-08	-25.401	8.6E-08	-4.5804	-2.9E-08	-160.603
4430	0	Extremo 1A	-6.1E-09	-77.073	1.2E-08	-5.5701	6.8E-09	-169.694
4430	0.5	Extremo 1A	-6.1E-09	-61.448	1.2E-08	-5.5701	9.4E-10	-135.063
4430	1	Extremo 1A	-6.1E-09	-45.823	1.2E-08	-5.5701	-5E-09	-108.246
4430	0	Extremo 2A	-5.1E-08	-77.073	1.1E-07	-5.576	6.5E-08	-169.694
4430	0.5	Extremo 2A	-5.1E-08	-61.448	1.1E-07	-5.576	8.7E-09	-135.064
4430	1	Extremo 2A	-5.1E-08	-45.823	1.1E-07	-5.576	-4.7E-08	-108.246
4431	0	Extremo 1A	-6.8E-09	26.585	-1.7E-08	2.1032	-8.2E-09	-123.986
4431	0.5	Extremo 1A	-6.8E-09	42.21	-1.7E-08	2.1032	9.8E-11	-141.185
4431	1	Extremo 1A	-6.8E-09	57.835	-1.7E-08	2.1032	8.4E-09	-166.197
4431	0	Extremo 2A	-5.5E-08	26.586	-1.4E-07	2.1035	-6.9E-08	-123.987
4431	0.5	Extremo 2A	-5.5E-08	42.211	-1.4E-07	2.1035	4.7E-10	-141.186
4431	1	Extremo 2A	-5.5E-08	57.836	-1.4E-07	2.1035	7E-08	-166.197
4432	0	Extremo 1A	-1E-08	7.9	-1.5E-08	2.9474	-6.2E-09	-171.612
4432	0.5	Extremo 1A	-1E-08	23.525	-1.5E-08	2.9474	1.4E-09	-179.468
4432	1	Extremo 1A	-1E-08	39.15	-1.5E-08	2.9474	8.9E-09	-195.136
4432	0	Extremo 2A	-8.5E-08	7.9	-1.3E-07	2.947	-5.3E-08	-171.613
4432	0.5	Extremo 2A	-8.5E-08	23.525	-1.3E-07	2.947	1.1E-08	-179.469
4432	1	Extremo 2A	-8.5E-08	39.15	-1.3E-07	2.947	7.5E-08	-195.137
4433	0	Extremo 1A	-1.3E-08	-12.78	-7.5E-09	3.5753	-1.2E-09	-201.598
4433	0.5	Extremo 1A	-1.3E-08	2.845	-7.5E-09	3.5753	2.5E-09	-199.114
4433	1	Extremo 1A	-1.3E-08	18.47	-7.5E-09	3.5753	6.3E-09	-204.443
4433	0	Extremo 2A	-1.1E-07	-12.78	-6.3E-08	3.5744	-9.4E-09	-201.599
4433	0.5	Extremo 2A	-1.1E-07	2.845	-6.3E-08	3.5744	2.2E-08	-199.116
4433	1	Extremo 2A	-1.1E-07	18.47	-6.3E-08	3.5744	5.4E-08	-204.444
4434	0	Extremo 1A	-1.3E-08	-34.66	3E-09	4.1023	4.2E-09	-212.081
4434	0.5	Extremo 1A	-1.3E-08	-19.035	3E-09	4.1023	2.8E-09	-198.657
4434	1	Extremo 1A	-1.3E-08	-3.41	3E-09	4.1023	1.3E-09	-193.046
4434	0	Extremo 2A	-1.1E-07	-34.66	2.9E-08	4.1008	3.9E-08	-212.082
4434	0.5	Extremo 2A	-1.1E-07	-19.035	2.9E-08	4.1008	2.5E-08	-198.658
4434	1	Extremo 2A	-1.1E-07	-3.41	2.9E-08	4.1008	9.9E-09	-193.047
4435	0	Extremo 1A	-1.1E-08	-56.651	1.2E-08	4.5836	8E-09	-201.628
4435	0.5	Extremo 1A	-1.1E-08	-41.026	1.2E-08	4.5836	2E-09	-177.209
4435	1	Extremo 1A	-1.1E-08	-25.401	1.2E-08	4.5836	-4E-09	-160.602
4435	0	Extremo 2A	-9.5E-08	-56.651	1.1E-07	4.5811	7.3E-08	-201.629
4435	0.5	Extremo 2A	-9.5E-08	-41.026	1.1E-07	4.5811	1.8E-08	-177.21
4435	1	Extremo 2A	-9.5E-08	-25.401	1.1E-07	4.5811	-3.7E-08	-160.603
4436	0	Extremo 1A	-7.6E-09	-77.073	1.6E-08	5.5839	9E-09	-169.693
4436	0.5	Extremo 1A	-7.6E-09	-61.448	1.6E-08	5.5839	1.2E-09	-135.063
4436	1	Extremo 1A	-7.6E-09	-45.823	1.6E-08	5.5839	-6.6E-09	-108.245
4436	0	Extremo 2A	-6.5E-08	-77.073	1.4E-07	5.5778	8.3E-08	-169.694
4436	0.5	Extremo 2A	-6.5E-08	-61.448	1.4E-07	5.5778	1.1E-08	-135.063
4436	1	Extremo 2A	-6.5E-08	-45.823	1.4E-07	5.5778	-6E-08	-108.246
4437	0	Extremo 1A	-8.6E-09	26.486	-2.1E-08	5.8754	-1.1E-08	-123.206
4437	0.5	Extremo 1A	-8.6E-09	42.111	-2.1E-08	5.8754	1.4E-10	-140.355
4437	1	Extremo 1A	-8.6E-09	57.736	-2.1E-08	5.8754	1.1E-08	-165.317
4437	0	Extremo 2A	-6.9E-08	26.486	-1.8E-07	5.8763	-8.8E-08	-123.207
4437	0.5	Extremo 2A	-6.9E-08	42.111	-1.8E-07	5.8763	4.4E-10	-140.356
4437	1	Extremo 2A	-6.9E-08	57.736	-1.8E-07	5.8763	8.9E-08	-165.318
4438	0	Extremo 1A	-1.3E-08	8.557	-1.9E-08	8.3331	-7.9E-09	-169.672
4438	0.5	Extremo 1A	-1.3E-08	24.182	-1.9E-08	8.3331	1.8E-09	-177.856
4438	1	Extremo 1A	-1.3E-08	39.807	-1.9E-08	8.3331	1.1E-08	-193.853
4438	0	Extremo 2A	-1.1E-07	8.557	-1.6E-07	8.3333	-6.7E-08	-169.673
4438	0.5	Extremo 2A	-1.1E-07	24.182	-1.6E-07	8.3333	1.4E-08	-177.858
4438	1	Extremo 2A	-1.1E-07	39.807	-1.6E-07	8.3333	9.6E-08	-193.855
4439	0	Extremo 1A	-1.6E-08	-11.865	-9.5E-09	10.3991	-1.4E-09	-199.331
4439	0.5	Extremo 1A	-1.6E-08	3.76	-9.5E-09	10.3991	3.3E-09	-197.305
4439	1	Extremo 1A	-1.6E-08	19.385	-9.5E-09	10.3991	8E-09	-203.091
4439	0	Extremo 2A	-1.3E-07	-11.865	-8.1E-08	10.3985	-1.2E-08	-199.333
4439	0.5	Extremo 2A	-1.3E-07	3.76	-8.1E-08	10.3985	2.8E-08	-197.307
4439	1	Extremo 2A	-1.3E-07	19.385	-8.1E-08	10.3985	6.9E-08	-203.093
4440	0	Extremo 1A	-1.7E-08	-34.154	4.1E-09	12.2976	5.6E-09	-210.374
4440	0.5	Extremo 1A	-1.7E-08	-18.529	4.1E-09	12.2976	3.6E-09	-197.203
4440	1	Extremo 1A	-1.7E-08	-2.904	4.1E-09	12.2976	1.5E-09	-191.845
4440	0	Extremo 2A	-1.4E-07	-34.154	3.6E-08	12.296	5E-08	-210.376
4440	0.5	Extremo 2A	-1.4E-07	-18.529	3.6E-08	12.296	3.1E-08	-197.206
4440	1	Extremo 2A	-1.4E-07	-2.904	3.6E-08	12.296	1.3E-08	-191.847
4441	0	Extremo 1A	-1.4E-08	-56.373	1.6E-08	13.9202	1E-08	-200.706
4441	0.5	Extremo 1A	-1.4E-08	-40.748	1.6E-08	13.9202	2.5E-09	-176.425
4441	1	Extremo 1A	-1.4E-08	-25.123	1.6E-08	13.9202	-5.3E-09	-159.958
4441	0	Extremo 2A	-1.2E-07	-56.373	1.4E-07	13.9174	9.3E-08	-200.707
4441	0.5	Extremo 2A	-1.2E-07	-40.748	1.4E-07	13.9174	2.3E-08	-176.427
4441	1	Extremo 2A	-1.2E-07	-25.123	1.4E-07	13.9174	-4.7E-08	-159.96
4442	0	Extremo 1A	-9.6E-09	-76.729	2E-08	16.8631	1.2E-08	-169.406
4442	0.5	Extremo 1A	-9.6E-09	-61.104	2E-08	16.8631	1.6E-09	-134.948
4442	1	Extremo 1A	-9.6E-09	-45.479	2E-08	16.8631	-8.6E-09	-108.302
4442	0	Extremo 2A	-8.3E-08	-76.73	1.8E-07	16.8566	1.1E-07	-169.407
4442	0.5	Extremo 2A	-8.3E-08	-61.105	1.8E-07	16.8566	1.5E-08	-134.949
4442	1	Extremo 2A	-8.3E-08	-45.48	1.8E-07	16.8566	-7.7E-08	-108.303
4443	0	Extremo 1A	-1.1E-08	25.71	-2.7E-08	8.3732	-1.3E-08	-122.443
4443	0.5	Extremo 1A	-1.1E-08	41.335	-2.7E-08	8.3732	1.8E-10	-139.204
4443	1	Extremo 1A	-1.1E-08	56.96	-2.7E-08	8.3732	1.4E-08	-163.778
4443	0	Extremo 2A	-8.7E-08	25.711	-2.3E-07	8.375	-1.1E-07	-122.444
4443	0.5	Extremo 2A	-8.7E-08	41.336	-2.3E-07	8.375	3.5E-10	-139.205
4443	1	Extremo 2A	-8.7E-08	56.961	-2.3E-07	8.375	1.1E-07	-163.779
4444	0	Extremo 1A	-1.7E-08	9.662	-2.5E-08	11.8667	-1E-08	-165.78
4444	0.5	Extremo 1A	-1.7E-08	25.287	-2.5E-08	11.8667	2.3E-09	-174.517
4444	1	Extremo 1A	-1.7E-08	40.912	-2.5E-08	11.8667	1.5E-08	-191.067
4444	0	Extremo 2A	-1.4E-07	9.662	-2.1E-07	11.8681	-8.6E-08	-165.783
4444	0.5	Extremo 2A	-1.4E-07	25.287	-2.1E-07	11.8681	1.8E-08	-174.52
4444	1	Extremo 2A	-1.4E-07	40.912	-2.1E-07	11.8681	1.2E-07	-191.07
4445	0	Extremo 1A	-2E-08	-9.96	-1.2E-08	15.9446	-1.7E-09	-193.79
4445	0.5	Extremo 1A	-2E-08	5.665	-1.2E-08	15.9446	4.2E-09	-192.716
4445	1	Extremo 1A	-2E-08	21.29	-1.2E-08	15.9446	1E-08	-199.455
4445	0	Extremo 2A	-1.7E-07	-9.96	-1E-07	15.9448	-1.6E-08	-193.794
4445	0.5	Extremo 2A	-1.7E-07	5.665	-1E-07	15.9448	3.6E-08	-192.72
4445	1	Extremo 2A	-1.7E-07	21.29	-1E-07	15.9448	8.8E-08	-199.459
4446	0	Extremo 1A	-2.1E-08	-32.872	5.5E-09	20.6229	7.3E-09	-205.853
4446	0.5	Extremo 1A	-2.1E-08	-17.247	5.5E-09	20.6229	4.6E-09	-193.324
4446	1	Extremo 1A	-2.1E-08	-1.622	5.5E-09	20.6229	1.8E-09	-188.606
4446	0	Extremo 2A	-1.8E-07	-32.872	4.5E-08	20.6212	6.3E-08	-205.857
4446	0.5	Extremo 2A	-1.8E-07	-17.247	4.5E-08	20.6212	4E-08	-193.328
4446	1	Extremo 2A	-1.8E-07	-1.622	4.5E-08	20.6212	1.7E-08	-188.61
4447	0	Extremo 1A	-1.8E-08	-55.416	2E-08	24.0262	1.3E-08	-198.538
4447	0.5	Extremo 1A	-1.8E-08	-39.791	2E-08	24.0262	3.3E-09	-174.737
4447	1	Extremo 1A	-1.8E-08	-24.166	2E-08	24.0262	-6.9E-09	-158.748
4447	0	Extremo 2A	-1.5E-07	-55.416	1.8E-07	24.0225	1.2E-07	-198.541
4447	0.5	Extremo 2A	-1.5E-07	-39.791	1.8E-07	24.0225	2.9E-08	-174.74
4447	1	Extremo 2A	-1.5E-07	-24.166	1.8E-07	24.0225	-6E-08	-158.751
4448	0	Extremo 1A	-1.2E-08	-75.558	2.6E-08	28.4694	1.5E-08	-169.016
4448	0.5	Extremo 1A	-1.2E-08	-59.933	2.6E-08	28.4694	2E-09	-135.143
4448	1	Extremo 1A	-1.2E-08	-44.308	2.6E-08	28.4694	-1.1E-08	-109.083
4448	0	Extremo 2A	-1.1E-07	-75.558	2.3E-07	28.4621	1.4E-07	-169.018
4448	0.5	Extremo 2A	-1.1E-07	-59.933	2.3E-07	28.4621	1.9E-08	-135.145
4448	1	Extremo 2A	-1.1E-07	-44.308	2.3E-07	28.4621	-9.8E-08	-109.084
4449	0	Extremo 1A	-1.4E-08	22.776	-3.4E-08	9.3787	-1.7E-08	-124.694
4449	0.5	Extremo 1A	-1.4E-08	38.401	-3.4E-08	9.3787	2.3E-10	-139.989
4449	1	Extremo 1A	-1.4E-08	54.026	-3.4E-08	9.3787	1.7E-08	-163.096
4449	0	Extremo 2A	-1.1E-07	22.778	-2.9E-07	9.3815	-1.4E-07	-124.693
4449	0.5	Extremo 2A	-1.1E-07	38.403	-2.9E-07	9.3815	1.5E-10	-139.989
4449	1	Extremo 2A	-1.1E-07	54.028	-2.9E-07	9.3815	1.4E-07	-163.096
4450	0	Extremo 1A	-2.1E-08	9.6	-3.1E-08	10.9422	-1.3E-08	-161.364
4450	0.5	Extremo 1A	-2.1E-08	25.225	-3.1E-08	10.9422	2.9E-09	-170.07
4450	1	Extremo 1A	-2.1E-08	40.85	-3.1E-08	10.9422	1.8E-08	-186.589
4450	0	Extremo 2A	-1.7E-07	9.6	-2.7E-07	10.9461	-1.1E-07	-161.367
4450	0.5	Extremo 2A	-1.7E-07	25.225	-2.7E-07	10.9461	2.3E-08	-170.073
4450	1	Extremo 2A	-1.7E-07	40.85	-2.7E-07	10.9461	1.6E-07	-186.592
4451	0	Extremo 1A	-2.6E-08	-8.087	-1.5E-08	18.0367	-2.1E-09	-182.61
4451	0.5	Extremo 1A	-2.6E-08	7.538	-1.5E-08	18.0367	5.4E-09	-182.472
4451	1	Extremo 1A	-2.6E-08	23.163	-1.5E-08	18.0367	1.3E-08	-190.148
4451	0	Extremo 2A	-2.2E-07	-8.087	-1.3E-07	18.0388	-2.2E-08	-182.617
4451	0.5	Extremo 2A	-2.2E-07	7.538	-1.3E-07	18.0388	4.5E-08	-182.48
4451	1	Extremo 2A	-2.2E-07	23.163	-1.3E-07	18.0388	1.1E-07	-190.155
4452	0	Extremo 1A	-2.7E-08	-29.177	7.2E-09	29.8704	9.5E-09	-194.689
4452	0.5	Extremo 1A	-2.7E-08	-13.552	7.2E-09	29.8704	5.9E-09	-184.007
4452	1	Extremo 1A	-2.7E-08	2.073	7.2E-09	29.8704	2.3E-09	-181.138
4452	0	Extremo 2A	-2.3E-07	-29.177	5.6E-08	29.8678	7.9E-08	-194.698
4452	0.5	Extremo 2A	-2.3E-07	-13.552	5.6E-08	29.8678	5.1E-08	-184.015
4452	1	Extremo 2A	-2.3E-07	2.073	5.6E-08	29.8678	2.3E-08	-181.146
4453	0	Extremo 1A	-2.3E-08	-51.597	2.6E-08	36.4694	1.7E-08	-194.424
4453	0.5	Extremo 1A	-2.3E-08	-35.972	2.6E-08	36.4694	4.2E-09	-172.531
4453	1	Extremo 1A	-2.3E-08	-20.347	2.6E-08	36.4694	-9E-09	-158.452
4453	0	Extremo 2A	-2E-07	-51.598	2.3E-07	36.4635	1.5E-07	-194.429

4453	0.5	Extremo 2A	-2E-07	-35.973	2.3E-07	36.4635	3.8E-08	-172.536
4453	1	Extremo 2A	-2E-07	-20.348	2.3E-07	36.4635	-7.5E-08	-158.456
4454	0	Extremo 1A	-1.5E-08	-72.163	3.4E-08	39.9941	2E-08	-169.759
4454	0.5	Extremo 1A	-1.5E-08	-56.538	3.4E-08	39.9941	2.6E-09	-137.584
4454	1	Extremo 1A	-1.5E-08	-40.913	3.4E-08	39.9941	-1.4E-08	-113.221
4454	0	Extremo 2A	-1.3E-07	-72.165	3E-07	39.9854	1.7E-07	-169.761
4454	0.5	Extremo 2A	-1.3E-07	-56.54	3E-07	39.9854	2.4E-08	-137.585
4454	1	Extremo 2A	-1.3E-07	-40.915	3E-07	39.9854	-1.3E-07	-113.221
4455	0	Extremo 1A	-1.7E-08	17.964	-4.4E-08	12.2093	-2.2E-08	-137.49
4455	0.5	Extremo 1A	-1.7E-08	33.589	-4.4E-08	12.2093	2.9E-10	-150.379
4455	1	Extremo 1A	-1.7E-08	49.214	-4.4E-08	12.2093	2.2E-08	-171.079
4455	0	Extremo 2A	-1.4E-07	17.968	-3.7E-07	12.2114	-1.8E-07	-137.482
4455	0.5	Extremo 2A	-1.4E-07	33.593	-3.7E-07	12.2114	-2.2E-10	-150.373
4455	1	Extremo 2A	-1.4E-07	49.218	-3.7E-07	12.2114	1.8E-07	-171.075
4456	0	Extremo 1A	-2.7E-08	-0.377	-4E-08	-0.2828	-1.6E-08	-165.363
4456	0.5	Extremo 1A	-2.7E-08	15.248	-4E-08	-0.2828	3.7E-09	-169.08
4456	1	Extremo 1A	-2.7E-08	30.873	-4E-08	-0.2828	2.3E-08	-180.611
4456	0	Extremo 2A	-2.2E-07	-0.371	-3.4E-07	-0.273	-1.4E-07	-165.361
4456	0.5	Extremo 2A	-2.2E-07	15.254	-3.4E-07	-0.273	2.9E-08	-169.082
4456	1	Extremo 2A	-2.2E-07	30.879	-3.4E-07	-0.273	2E-07	-180.615
4457	0	Extremo 1A	-3.3E-08	-13.335	-1.9E-08	11.8095	-2.7E-09	-161.881
4457	0.5	Extremo 1A	-3.3E-08	2.29	-1.9E-08	11.8095	6.9E-09	-159.12
4457	1	Extremo 1A	-3.3E-08	17.915	-1.9E-08	11.8095	1.6E-08	-164.171
4457	0	Extremo 2A	-2.8E-07	-13.33	-1.7E-07	11.8162	-2.9E-08	-161.895
4457	0.5	Extremo 2A	-2.8E-07	2.295	-1.7E-07	11.8162	5.8E-08	-159.136
4457	1	Extremo 2A	-2.8E-07	17.92	-1.7E-07	11.8162	1.4E-07	-164.189
4458	0	Extremo 1A	-3.4E-08	-15.524	9.3E-09	42.3014	1.2E-08	-165.093
4458	0.5	Extremo 1A	-3.4E-08	0.101	9.3E-09	42.3014	7.5E-09	-161.238
4458	1	Extremo 1A	-3.4E-08	15.726	9.3E-09	42.3014	2.8E-09	-165.195
4458	0	Extremo 2A	-2.9E-07	-15.526	7E-08	42.2963	1E-07	-165.113
4458	0.5	Extremo 2A	-2.9E-07	0.099	7E-08	42.2963	6.5E-08	-161.256
4458	1	Extremo 2A	-2.9E-07	15.724	7E-08	42.2963	3E-08	-165.211
4459	0	Extremo 1A	-2.9E-08	-34.651	3.4E-08	55.3071	2.2E-08	-186.789
4459	0.5	Extremo 1A	-2.9E-08	-19.026	3.4E-08	55.3071	5.4E-09	-173.369
4459	1	Extremo 1A	-2.9E-08	-3.401	3.4E-08	55.3071	-1.2E-08	-167.763
4459	0	Extremo 2A	-2.5E-07	-34.657	2.9E-07	55.2959	1.9E-07	-186.798
4459	0.5	Extremo 2A	-2.5E-07	-19.032	2.9E-07	55.2959	4.8E-08	-173.376
4459	1	Extremo 2A	-2.5E-07	-3.407	2.9E-07	55.2959	-9.5E-08	-167.767
4460	0	Extremo 1A	-2E-08	-65.581	4.4E-08	47.5785	2.5E-08	-178.163
4460	0.5	Extremo 1A	-2E-08	-49.956	4.4E-08	47.5785	3.3E-09	-149.278
4460	1	Extremo 1A	-2E-08	-34.331	4.4E-08	47.5785	-1.8E-08	-128.207
4460	0	Extremo 2A	-1.7E-07	-65.586	3.8E-07	47.5692	2.2E-07	-178.163
4460	0.5	Extremo 2A	-1.7E-07	-49.961	3.8E-07	47.5692	3.1E-08	-149.276
4460	1	Extremo 2A	-1.7E-07	-34.336	3.8E-07	47.5692	-1.6E-07	-128.202
4461	0	Extremo 1A	-2.2E-08	37.367	-5.6E-08	30.8275	-2.7E-08	-168.249
4461	0.5	Extremo 1A	-2.2E-08	52.992	-5.6E-08	30.8275	3.5E-10	-190.838
4461	1	Extremo 1A	-2.2E-08	68.617	-5.6E-08	30.8275	2.8E-08	-221.241
4461	0	Extremo 2A	-1.8E-07	37.363	-4.6E-07	30.8211	-2.3E-07	-168.226
4461	0.5	Extremo 2A	-1.8E-07	52.988	-4.6E-07	30.8211	-8.5E-10	-190.814
4461	1	Extremo 2A	-1.8E-07	68.613	-4.6E-07	30.8211	2.3E-07	-221.214
4462	0	Extremo 1A	-3.4E-08	-61.456	-5E-08	-33.9091	-2.1E-08	-214.931
4462	0.5	Extremo 1A	-3.4E-08	-45.831	-5E-08	-33.9091	4.7E-09	-188.11
4462	1	Extremo 1A	-3.4E-08	-30.206	-5E-08	-33.9091	3E-08	-169.101
4462	0	Extremo 2A	-2.8E-07	-61.423	-4.3E-07	-33.8856	-1.8E-07	-214.906
4462	0.5	Extremo 2A	-2.8E-07	-45.798	-4.3E-07	-33.8856	3.6E-08	-188.1
4462	1	Extremo 2A	-2.8E-07	-30.173	-4.3E-07	-33.8856	2.5E-07	-169.108
4463	0	Extremo 1A	-4.2E-08	-50.531	-2.4E-08	-9.2223	-3.4E-09	-126.894
4463	0.5	Extremo 1A	-4.2E-08	-34.906	-2.4E-08	-9.2223	8.8E-09	-105.535
4463	1	Extremo 1A	-4.2E-08	-19.281	-2.4E-08	-9.2223	2.1E-08	-91.9879
4463	0	Extremo 2A	-3.5E-07	-50.507	-2.2E-07	-9.2066	-3.8E-08	-126.917
4463	0.5	Extremo 2A	-3.5E-07	-34.882	-2.2E-07	-9.2066	7.3E-08	-105.57
4463	1	Extremo 2A	-3.5E-07	-19.257	-2.2E-07	-9.2066	1.8E-07	-92.0348
4464	0	Extremo 1A	-4.3E-08	31.997	1.2E-08	59.9421	1.6E-08	-86.7613
4464	0.5	Extremo 1A	-4.3E-08	47.622	1.2E-08	59.9421	9.6E-09	-106.666
4464	1	Extremo 1A	-4.3E-08	63.247	1.2E-08	59.9421	3.6E-09	-134.383
4464	0	Extremo 2A	-3.7E-07	31.98	8.6E-08	59.9311	1.3E-07	-86.8099
4464	0.5	Extremo 2A	-3.7E-07	47.605	8.6E-08	59.9311	8.3E-08	-106.706
4464	1	Extremo 2A	-3.7E-07	63.23	8.6E-08	59.9311	4E-08	-134.415
4465	0	Extremo 1A	-3.7E-08	39.63	4.3E-08	88.7849	2.8E-08	-167.708
4465	0.5	Extremo 1A	-3.7E-08	55.255	4.3E-08	88.7849	6.9E-09	-191.429
4465	1	Extremo 1A	-3.7E-08	70.88	4.3E-08	88.7849	-1.5E-08	-222.963
4465	0	Extremo 2A	-3.2E-07	39.598	3.6E-07	88.7615	2.4E-07	-167.727
4465	0.5	Extremo 2A	-3.2E-07	55.223	3.6E-07	88.7615	6.2E-08	-191.432
4465	1	Extremo 2A	-3.2E-07	70.848	3.6E-07	88.7615	-1.2E-07	-222.95
4466	0	Extremo 1A	-2.5E-08	-73.658	5.6E-08	35.5824	3.2E-08	-223.631
4466	0.5	Extremo 1A	-2.5E-08	-58.033	5.6E-08	35.5824	4.3E-09	-190.709
4466	1	Extremo 1A	-2.5E-08	-42.408	5.6E-08	35.5824	-2.4E-08	-165.598
4466	0	Extremo 2A	-2.2E-07	-73.66	4.9E-07	35.5784	2.8E-07	-223.617
4466	0.5	Extremo 2A	-2.2E-07	-58.035	4.9E-07	35.5784	4E-08	-190.693
4466	1	Extremo 2A	-2.2E-07	-42.41	4.9E-07	35.5784	-2E-07	-165.582
4467	0	Extremo 1A	-2.8E-08	234.456	-7.1E-08	82.4059	-3.5E-08	-176.055
4467	0.5	Extremo 1A	-2.8E-08	250.081	-7.1E-08	82.4059	4.1E-10	-297.189
4467	1	Extremo 1A	-2.8E-08	265.706	-7.1E-08	82.4059	3.6E-08	-426.136
4467	0	Extremo 2A	-2.2E-07	234.369	-5.9E-07	82.3758	-3E-07	-176.027
4467	0.5	Extremo 2A	-2.2E-07	249.994	-5.9E-07	82.3758	-1.8E-09	-297.118
4467	1	Extremo 2A	-2.2E-07	265.619	-5.9E-07	82.3758	2.9E-07	-426.021
4468	0	Extremo 1A	-4.3E-08	-335.041	-6.4E-08	-94.664	-2.6E-08	-425.981
4468	0.5	Extremo 1A	-4.3E-08	-319.416	-6.4E-08	-94.664	5.9E-09	-262.367
4468	1	Extremo 1A	-4.3E-08	-303.791	-6.4E-08	-94.664	3.8E-08	-106.565
4468	0	Extremo 2A	-3.5E-07	-334.893	-5.5E-07	-94.6178	-2.3E-07	-425.863
4468	0.5	Extremo 2A	-3.5E-07	-319.268	-5.5E-07	-94.6178	4.5E-08	-262.323
4468	1	Extremo 2A	-3.5E-07	-303.643	-5.5E-07	-94.6178	3.2E-07	-106.595
4469	0	Extremo 1A	-5.3E-08	-158.464	-3.1E-08	-35.2386	-4.3E-09	-70.3815
4469	0.5	Extremo 1A	-5.3E-08	-142.839	-3.1E-08	-35.2386	1.1E-08	4.9442
4469	1	Extremo 1A	-5.3E-08	-127.214	-3.1E-08	-35.2386	2.7E-08	72.4575
4469	0	Extremo 2A	-4.5E-07	-158.392	-2.9E-07	-35.2148	-5.1E-08	-70.4223
4469	0.5	Extremo 2A	-4.5E-07	-142.767	-2.9E-07	-35.2148	9.3E-08	4.8674
4469	1	Extremo 2A	-4.5E-07	-127.142	-2.9E-07	-35.2148	2.4E-07	72.3445
4470	0	Extremo 1A	-5.5E-08	148.565	1.5E-08	67.7896	2E-08	85.404
4470	0.5	Extremo 1A	-5.5E-08	164.19	1.5E-08	67.7896	1.2E-08	7.2153
4470	1	Extremo 1A	-5.5E-08	179.815	1.5E-08	67.7896	4.6E-09	-78.7859
4470	0	Extremo 2A	-4.7E-07	148.509	1.1E-07	67.7734	1.6E-07	85.2907
4470	0.5	Extremo 2A	-4.7E-07	164.134	1.1E-07	67.7734	1.1E-07	7.13
4470	1	Extremo 2A	-4.7E-07	179.759	1.1E-07	67.7734	5.3E-08	-78.8432
4471	0	Extremo 1A	-4.7E-08	334.128	5.5E-08	133.619	3.6E-08	-88.7589
4471	0.5	Extremo 1A	-4.7E-08	349.753	5.5E-08	133.619	8.8E-09	-259.729
4471	1	Extremo 1A	-4.7E-08	365.378	5.5E-08	133.619	-1.9E-08	-438.511
4471	0	Extremo 2A	-4.1E-07	333.989	4.6E-07	133.578	3.1E-07	-88.8089
4471	0.5	Extremo 2A	-4.1E-07	349.614	4.6E-07	133.578	8E-08	-259.71
4471	1	Extremo 2A	-4.1E-07	365.239	4.6E-07	133.578	-1.5E-07	-438.423
4472	0	Extremo 1A	-3.2E-08	-226.5	7.1E-08	-24.1291	4.1E-08	-412.137
4472	0.5	Extremo 1A	-3.2E-08	-210.875	7.1E-08	-24.1291	5.5E-09	-302.794
4472	1	Extremo 1A	-3.2E-08	-195.25	7.1E-08	-24.1291	-3E-08	-201.263
4472	0	Extremo 2A	-2.8E-07	-226.447	6.2E-07	-24.1116	3.6E-07	-412.056
4472	0.5	Extremo 2A	-2.8E-07	-210.822	6.2E-07	-24.1116	5.2E-08	-302.739
4472	1	Extremo 2A	-2.8E-07	-195.197	6.2E-07	-24.1116	-2.6E-07	-201.234
4473	0	Extremo 1A	-3.5E-08	1030.26	-9E-08	-0.0015	-4.4E-08	63.3543
4473	0.5	Extremo 1A	-3.5E-08	1045.88	-9E-08	-0.0015	4.7E-10	-455.681
4473	1	Extremo 1A	-3.5E-08	1061.51	-9E-08	-0.0015	4.5E-08	-982.53
4473	0	Extremo 2A	-2.8E-07	1029.84	-7.5E-07	-0.00013	-3.8E-07	63.2822
4473	0.5	Extremo 2A	-2.8E-07	1045.46	-7.5E-07	-0.00013	-3.4E-09	-455.543
4473	1	Extremo 2A	-2.8E-07	1061.09	-7.5E-07	-0.00013	3.7E-07	-982.181
4474	0	Extremo 1A	-5.4E-08	-1197.32	-8.2E-08	-0.0026	-3.3E-08	-986.806
4474	0.5	Extremo 1A	-5.4E-08	-1181.69	-8.2E-08	-0.0026	7.5E-09	-392.053
4474	1	Extremo 1A	-5.4E-08	-1166.07	-8.2E-08	-0.0026	4.8E-08	194.887
4474	0	Extremo 2A	-4.5E-07	-1196.81	-7.1E-07	-0.00049	-3E-07	-986.451
4474	0.5	Extremo 2A	-4.5E-07	-1181.18	-7.1E-07	-0.00049	5.7E-08	-391.953
4474	1	Extremo 2A	-4.5E-07	-1165.56	-7.1E-07	-0.00049	4.1E-07	194.733
4475	0	Extremo 1A	-6.7E-08	-266.118	-4E-08	-0.0029	-5.6E-09	22.0193
4475	0.5	Extremo 1A	-6.7E-08	-250.493	-4E-08	-0.0029	1.4E-08	151.172
4475	1	Extremo 1A	-6.7E-08	-234.868	-4E-08	-0.0029	3.4E-08	272.513
4475	0	Extremo 2A	-5.7E-07	-266.001	-3.7E-07	-0.00058	-6.8E-08	21.9434
4475	0.5	Extremo 2A	-5.7E-07	-250.376	-3.7E-07	-0.00058	1.2E-07	151.038
4475	1	Extremo 2A	-5.7E-07	-234.751	-3.7E-07	-0.00058	3E-07	272.319
4476	0	Extremo 1A	-7E-08	258.956	1.9E-08	-0.0032	2.5E-08	289.742
4476	0.5	Extremo 1A	-7E-08	274.581	1.9E-08	-0.0032	1.6E-08	156.358
4476	1	Extremo 1A	-7E-08	290.206	1.9E-08	-0.0032	5.9E-09	15.1609
4476	0	Extremo 2A	-6E-07	258.86	1.3E-07	-0.00068	2E-07	289.551
4476	0.5	Extremo 2A	-6E-07	274.485	1.3E-07	-0.00068	1.4E-07	156.215
4476	1	Extremo 2A	-6E-07	290.11	1.3E-07	-0.00068	7.1E-08	15.0663
4477	0	Extremo 1A	-6E-08	1212.63	7E-08	-0.0044	4.6E-08	226.275
4477	0.5	Extremo 1A	-6E-08	1228.26	7E-08	-0.0044	1.1E-08	-383.947
4477	1	Extremo 1A	-6E-08	1243.88	7E-08	-0.0044	-2.4E-08	-1001.98
4477	0	Extremo 2A	-5.2E-07	1212.17	5.9E-07	-0.0011	4E-07	226.109

4477	0.5	Extremo 2A	-5.2E-07	1227.8	5.9E-07	-0.0011	1E-07	-383.884
4477	1	Extremo 2A	-5.2E-07	1243.42	5.9E-07	-0.0011	-1.9E-07	-1001.69
4478	0	Extremo 1A	-4.1E-08	-946.907	9.1E-08	-0.0118	5.3E-08	-952.351
4478	0.5	Extremo 1A	-4.1E-08	-931.282	9.1E-08	-0.0118	7E-09	-482.804
4478	1	Extremo 1A	-4.1E-08	-915.657	9.1E-08	-0.0118	-3.9E-08	-21.0688
4478	0	Extremo 2A	-3.6E-07	-946.594	7.9E-07	-0.0039	4.6E-07	-952.075
4478	0.5	Extremo 2A	-3.6E-07	-930.969	7.9E-07	-0.0039	6.8E-08	-482.684
4478	1	Extremo 2A	-3.6E-07	-915.344	7.9E-07	-0.0039	-3.3E-07	-21.1061
4479	0	Extremo 1A	-4.4E-08	234.456	-1.1E-07	-82.4089	-5.6E-08	-176.055
4479	0.5	Extremo 1A	-4.4E-08	250.081	-1.1E-07	-82.4089	5.2E-10	-297.189
4479	1	Extremo 1A	-4.4E-08	265.706	-1.1E-07	-82.4089	5.7E-08	-426.136
4479	0	Extremo 2A	-3.6E-07	234.369	-9.5E-07	-82.376	-4.8E-07	-176.027
4479	0.5	Extremo 2A	-3.6E-07	249.994	-9.5E-07	-82.376	-5.7E-09	-297.118
4479	1	Extremo 2A	-3.6E-07	265.619	-9.5E-07	-82.376	4.7E-07	-426.021
4480	0	Extremo 1A	-6.9E-08	-335.041	-1E-07	94.6588	-4.2E-08	-425.981
4480	0.5	Extremo 1A	-6.9E-08	-319.416	-1E-07	94.6588	9.4E-09	-262.367
4480	1	Extremo 1A	-6.9E-08	-303.791	-1E-07	94.6588	6.1E-08	-106.565
4480	0	Extremo 2A	-5.6E-07	-334.893	-9.1E-07	94.6168	-3.8E-07	-425.863
4480	0.5	Extremo 2A	-5.6E-07	-319.268	-9.1E-07	94.6168	7.1E-08	-262.323
4480	1	Extremo 2A	-5.6E-07	-303.643	-9.1E-07	94.6168	5.2E-07	-106.595
4481	0	Extremo 1A	-8.6E-08	-158.464	-5.1E-08	35.2328	-7.3E-09	-70.3817
4481	0.5	Extremo 1A	-8.6E-08	-142.839	-5.1E-08	35.2328	1.8E-08	4.9441
4481	1	Extremo 1A	-8.6E-08	-127.214	-5.1E-08	35.2328	4.3E-08	72.4573
4481	0	Extremo 2A	-7.2E-07	-158.392	-4.8E-07	35.2137	-9.1E-08	-70.4224
4481	0.5	Extremo 2A	-7.2E-07	-142.767	-4.8E-07	35.2137	1.5E-07	4.8673
4481	1	Extremo 2A	-7.2E-07	-127.142	-4.8E-07	35.2137	3.9E-07	72.3445
4482	0	Extremo 1A	-8.9E-08	148.565	2.4E-08	-67.7959	3.2E-08	85.4039
4482	0.5	Extremo 1A	-8.9E-08	164.19	2.4E-08	-67.7959	2E-08	7.2152
4482	1	Extremo 1A	-8.9E-08	179.815	2.4E-08	-67.7959	7.7E-09	-78.7861
4482	0	Extremo 2A	-7.6E-07	148.509	1.6E-07	-67.7748	2.5E-07	85.2906
4482	0.5	Extremo 2A	-7.6E-07	164.134	1.6E-07	-67.7748	1.7E-07	7.1299
4482	1	Extremo 2A	-7.6E-07	179.759	1.6E-07	-67.7748	9.5E-08	-78.8433
4483	0	Extremo 1A	-7.6E-08	334.127	9E-08	-133.628	5.9E-08	-88.759
4483	0.5	Extremo 1A	-7.6E-08	349.752	9E-08	-133.628	1.4E-08	-259.729
4483	1	Extremo 1A	-7.6E-08	365.377	9E-08	-133.628	-3E-08	-438.512
4483	0	Extremo 2A	-6.6E-07	333.989	7.4E-07	-133.58	5E-07	-88.8089
4483	0.5	Extremo 2A	-6.6E-07	349.614	7.4E-07	-133.58	1.3E-07	-259.71
4483	1	Extremo 2A	-6.6E-07	365.239	7.4E-07	-133.58	-2.4E-07	-438.423
4484	0	Extremo 1A	-5.2E-08	-226.5	1.2E-07	24.1055	6.7E-08	-412.138
4484	0.5	Extremo 1A	-5.2E-08	-210.875	1.2E-07	24.1055	9E-09	-302.794
4484	1	Extremo 1A	-5.2E-08	-195.25	1.2E-07	24.1055	-4.9E-08	-201.263
4484	0	Extremo 2A	-4.6E-07	-226.447	1E-06	24.1038	5.9E-07	-412.056
4484	0.5	Extremo 2A	-4.6E-07	-210.822	1E-06	24.1038	8.7E-08	-302.739
4484	1	Extremo 2A	-4.6E-07	-195.197	1E-06	24.1038	-4.2E-07	-201.234
4485	0	Extremo 1A	-5.6E-08	37.367	-1.4E-07	-30.8304	-7.2E-08	-168.249
4485	0.5	Extremo 1A	-5.6E-08	52.992	-1.4E-07	-30.8304	5.4E-10	-190.839
4485	1	Extremo 1A	-5.6E-08	68.617	-1.4E-07	-30.8304	7.3E-08	-221.241
4485	0	Extremo 2A	-4.5E-07	37.363	-1.2E-06	-30.8213	-6.1E-07	-168.226
4485	0.5	Extremo 2A	-4.5E-07	52.988	-1.2E-06	-30.8213	-9.2E-09	-190.814
4485	1	Extremo 2A	-4.5E-07	68.613	-1.2E-06	-30.8213	6E-07	-221.214
4486	0	Extremo 1A	-8.7E-08	-61.456	-1.3E-07	33.9039	-5.4E-08	-214.932
4486	0.5	Extremo 1A	-8.7E-08	-45.831	-1.3E-07	33.9039	1.2E-08	-188.11
4486	1	Extremo 1A	-8.7E-08	-30.206	-1.3E-07	33.9039	7.8E-08	-169.101
4486	0	Extremo 2A	-7.1E-07	-61.423	-1.2E-06	33.8846	-4.9E-07	-214.906
4486	0.5	Extremo 2A	-7.1E-07	-45.798	-1.2E-06	33.8846	8.8E-08	-188.1
4486	1	Extremo 2A	-7.1E-07	-30.173	-1.2E-06	33.8846	6.7E-07	-169.108
4487	0	Extremo 1A	-1.1E-07	-50.531	-6.5E-08	9.2166	-9.5E-09	-126.894
4487	0.5	Extremo 1A	-1.1E-07	-34.906	-6.5E-08	9.2166	2.3E-08	-105.535
4487	1	Extremo 1A	-1.1E-07	-19.281	-6.5E-08	9.2166	5.5E-08	-91.9883
4487	0	Extremo 2A	-9.1E-07	-50.507	-6.2E-07	9.2054	-1.2E-07	-126.917
4487	0.5	Extremo 2A	-9.1E-07	-34.882	-6.2E-07	9.2054	1.9E-07	-105.57
4487	1	Extremo 2A	-9.1E-07	-19.257	-6.2E-07	9.2054	5E-07	-92.0349
4488	0	Extremo 1A	-1.1E-07	31.997	3.1E-08	-59.9484	4.1E-08	-86.7617
4488	0.5	Extremo 1A	-1.1E-07	47.622	3.1E-08	-59.9484	2.5E-08	-106.666
4488	1	Extremo 1A	-1.1E-07	63.247	3.1E-08	-59.9484	1E-08	-134.384
4488	0	Extremo 2A	-9.7E-07	31.98	1.9E-07	-59.9324	3.2E-07	-86.8101
4488	0.5	Extremo 2A	-9.7E-07	47.605	1.9E-07	-59.9324	2.2E-07	-106.706
4488	1	Extremo 2A	-9.7E-07	63.23	1.9E-07	-59.9324	1.3E-07	-134.415
4489	0	Extremo 1A	-9.7E-08	39.63	1.1E-07	-88.7937	7.5E-08	-167.708
4489	0.5	Extremo 1A	-9.7E-08	55.255	1.1E-07	-88.7937	1.8E-08	-191.429
4489	1	Extremo 1A	-9.7E-08	70.88	1.1E-07	-88.7937	-3.9E-08	-222.963
4489	0	Extremo 2A	-8.5E-07	39.598	9.4E-07	-88.7638	6.4E-07	-167.727
4489	0.5	Extremo 2A	-8.5E-07	55.223	9.4E-07	-88.7638	1.7E-07	-191.432
4489	1	Extremo 2A	-8.5E-07	70.848	9.4E-07	-88.7638	-3E-07	-222.95
4490	0	Extremo 1A	-6.6E-08	-73.658	1.5E-07	-35.606	8.6E-08	-223.631
4490	0.5	Extremo 1A	-6.6E-08	-58.033	1.5E-07	-35.606	1.2E-08	-190.709
4490	1	Extremo 1A	-6.6E-08	-42.408	1.5E-07	-35.606	-6.3E-08	-165.598
4490	0	Extremo 2A	-5.9E-07	-73.66	1.3E-06	-35.5862	7.6E-07	-223.617
4490	0.5	Extremo 2A	-5.9E-07	-58.035	1.3E-06	-35.5862	1.1E-07	-190.693
4490	1	Extremo 2A	-5.9E-07	-42.41	1.3E-06	-35.5862	-5.3E-07	-165.582
4491	0	Extremo 1A	-7.1E-08	17.964	-1.8E-07	-12.212	-9.1E-08	-137.491
4491	0.5	Extremo 1A	-7.1E-08	33.589	-1.8E-07	-12.212	5.3E-10	-150.379
4491	1	Extremo 1A	-7.1E-08	49.214	-1.8E-07	-12.212	9.2E-08	-171.08
4491	0	Extremo 2A	-5.6E-07	17.968	-1.5E-06	-12.2116	-7.8E-07	-137.482
4491	0.5	Extremo 2A	-5.6E-07	33.593	-1.5E-06	-12.2116	-1.4E-08	-150.373
4491	1	Extremo 2A	-5.6E-07	49.218	-1.5E-06	-12.2116	7.5E-07	-171.075
4492	0	Extremo 1A	-1.1E-07	-0.377	-1.7E-07	0.2777	-6.9E-08	-165.363
4492	0.5	Extremo 1A	-1.1E-07	15.248	-1.7E-07	0.2777	1.5E-08	-169.081
4492	1	Extremo 1A	-1.1E-07	30.873	-1.7E-07	0.2777	9.9E-08	-180.611
4492	0	Extremo 2A	-9E-07	-0.371	-1.5E-06	0.2721	-6.3E-07	-165.362
4492	0.5	Extremo 2A	-9E-07	15.254	-1.5E-06	0.2721	1.1E-07	-169.082
4492	1	Extremo 2A	-9E-07	30.879	-1.5E-06	0.2721	8.5E-07	-180.615
4493	0	Extremo 1A	-1.4E-07	-13.335	-8.3E-08	-11.8152	-1.3E-08	-161.882
4493	0.5	Extremo 1A	-1.4E-07	2.29	-8.3E-08	-11.8152	2.9E-08	-159.121
4493	1	Extremo 1A	-1.4E-07	17.915	-8.3E-08	-11.8152	7.1E-08	-164.172
4493	0	Extremo 2A	-1.2E-06	-13.331	-8.1E-07	-11.8173	-1.6E-07	-161.895
4493	0.5	Extremo 2A	-1.2E-06	2.294	-8.1E-07	-11.8173	2.4E-07	-159.136
4493	1	Extremo 2A	-1.2E-06	17.919	-8.1E-07	-11.8173	6.4E-07	-164.189
4494	0	Extremo 1A	-1.4E-07	-15.524	3.8E-08	-42.3077	5.1E-08	-165.094
4494	0.5	Extremo 1A	-1.4E-07	0.101	3.8E-08	-42.3077	3.2E-08	-161.238
4494	1	Extremo 1A	-1.4E-07	15.726	3.8E-08	-42.3077	1.3E-08	-165.195
4494	0	Extremo 2A	-1.2E-06	-15.526	2.3E-07	-42.2977	4E-07	-165.113
4494	0.5	Extremo 2A	-1.2E-06	0.099	2.3E-07	-42.2977	2.8E-07	-161.256
4494	1	Extremo 2A	-1.2E-06	15.724	2.3E-07	-42.2977	1.7E-07	-165.211
4495	0	Extremo 1A	-1.2E-07	-34.651	1.4E-07	-55.316	9.6E-08	-186.789
4495	0.5	Extremo 1A	-1.2E-07	-19.026	1.4E-07	-55.316	2.4E-08	-173.37
4495	1	Extremo 1A	-1.2E-07	-3.401	1.4E-07	-55.316	-4.9E-08	-167.763
4495	0	Extremo 2A	-1.1E-06	-34.657	1.2E-06	-55.2982	8.1E-07	-186.798
4495	0.5	Extremo 2A	-1.1E-06	-19.032	1.2E-06	-55.2982	2.2E-07	-173.376
4495	1	Extremo 2A	-1.1E-06	-3.407	1.2E-06	-55.2982	-3.8E-07	-167.767
4496	0	Extremo 1A	-8.5E-08	-65.581	1.9E-07	-47.6022	1.1E-07	-178.163
4496	0.5	Extremo 1A	-8.5E-08	-49.956	1.9E-07	-47.6022	1.5E-08	-149.279
4496	1	Extremo 1A	-8.5E-08	-34.331	1.9E-07	-47.6022	-8E-08	-128.207
4496	0	Extremo 2A	-7.6E-07	-65.586	1.6E-06	-47.5771	9.7E-07	-178.163
4496	0.5	Extremo 2A	-7.6E-07	-49.961	1.6E-06	-47.5771	1.5E-07	-149.276
4496	1	Extremo 2A	-7.6E-07	-34.336	1.6E-06	-47.5771	-6.7E-07	-128.202
4497	0	Extremo 1A	-9E-08	22.777	-2.3E-07	-9.3812	-1.2E-07	-124.695
4497	0.5	Extremo 1A	-9E-08	38.402	-2.3E-07	-9.3812	4.6E-10	-139.99
4497	1	Extremo 1A	-9E-08	54.027	-2.3E-07	-9.3812	1.2E-07	-163.097
4497	0	Extremo 2A	-7.1E-07	22.779	-2E-06	-9.3815	-1E-06	-124.693
4497	0.5	Extremo 2A	-7.1E-07	38.404	-2E-06	-9.3815	-2.2E-08	-139.989
4497	1	Extremo 2A	-7.1E-07	54.029	-2E-06	-9.3815	9.5E-07	-163.097
4498	0	Extremo 1A	-1.4E-07	9.6	-2.2E-07	-10.947	-8.9E-08	-161.365
4498	0.5	Extremo 1A	-1.4E-07	25.225	-2.2E-07	-10.947	1.9E-08	-170.071
4498	1	Extremo 1A	-1.4E-07	40.85	-2.2E-07	-10.947	1.3E-07	-186.59
4498	0	Extremo 2A	-1.1E-06	9.6	-1.9E-06	-10.9469	-8.1E-07	-161.367
4498	0.5	Extremo 2A	-1.1E-06	25.225	-1.9E-06	-10.9469	1.4E-07	-170.074
4498	1	Extremo 2A	-1.1E-06	40.85	-1.9E-06	-10.9469	1.1E-06	-186.593
4499	0	Extremo 1A	-1.8E-07	-8.087	-1.1E-07	-18.0424	-1.7E-08	-182.611
4499	0.5	Extremo 1A	-1.8E-07	7.538	-1.1E-07	-18.0424	3.7E-08	-182.474
4499	1	Extremo 1A	-1.8E-07	23.163	-1.1E-07	-18.0424	9.1E-08	-190.149
4499	0	Extremo 2A	-1.5E-06	-8.087	-1E-06	-18.0399	-2.2E-07	-182.617
4499	0.5	Extremo 2A	-1.5E-06	7.538	-1E-06	-18.0399	3E-07	-182.48
4499	1	Extremo 2A	-1.5E-06	23.163	-1E-06	-18.0399	8.3E-07	-190.156
4500	0	Extremo 1A	-1.8E-07	-29.177	4.8E-08	-29.8767	6.5E-08	-194.691
4500	0.5	Extremo 1A	-1.8E-07	-13.552	4.8E-08	-29.8767	4.1E-08	-184.008
4500	1	Extremo 1A	-1.8E-07	2.073	4.8E-08	-29.8767	1.7E-08	-181.139
4500	0	Extremo 2A	-1.6E-06	-29.177	2.7E-07	-29.8692	5E-07	-194.698
4500	0.5	Extremo 2A	-1.6E-06	-13.552	2.7E-07	-29.8692	3.6E-07	-184.016
4500	1	Extremo 2A	-1.6E-06	2.073	2.7E-07	-29.8692	2.3E-07	-181.146
4501	0	Extremo 1A	-1.6E-07	-51.597	1.8E-07	-36.4785	1.2E-07	-194.425
4501	0.5	Extremo 1A	-1.6E-07	-35.972	1.8E-07	-36.4785	3E-08	-172.532
4501	1	Extremo 1A	-1.6E-07	-20.347	1.8E-07	-36.4785	-6.2E-08	-158.452
4501	0	Extremo 2A	-1.4E-06	-51.598	1.5E-06	-36.4659	1E-06	-194.429

4501	0.5	Extremo 2A	-1.4E-06	-35.973	1.5E-06	-36.4659	2.8E-07	-172.537
4501	1	Extremo 2A	-1.4E-06	-20.348	1.5E-06	-36.4659	-4.7E-07	-158.456
4502	0	Extremo 1A	-1.1E-07	-72.163	2.4E-07	-40.018	1.4E-07	-169.76
4502	0.5	Extremo 1A	-1.1E-07	-56.538	2.4E-07	-40.018	1.9E-08	-137.584
4502	1	Extremo 1A	-1.1E-07	-40.913	2.4E-07	-40.018	-1E-07	-113.221
4502	0	Extremo 2A	-9.7E-07	-72.165	2.1E-06	-39.9934	1.2E-06	-169.762
4502	0.5	Extremo 2A	-9.7E-07	-56.54	2.1E-06	-39.9934	1.9E-07	-137.585
4502	1	Extremo 2A	-9.7E-07	-40.915	2.1E-06	-39.9934	-8.6E-07	-113.221
4503	0	Extremo 1A	-1.1E-07	25.71	-3E-07	-8.3753	-1.5E-07	-122.444
4503	0.5	Extremo 1A	-1.1E-07	41.335	-3E-07	-8.3753	2.8E-10	-139.205
4503	1	Extremo 1A	-1.1E-07	56.96	-3E-07	-8.3753	1.5E-07	-163.779
4503	0	Extremo 2A	-9E-07	25.711	-2.5E-06	-8.3749	-1.3E-06	-122.444
4503	0.5	Extremo 2A	-9E-07	41.336	-2.5E-06	-8.3749	-3.2E-08	-139.206
4503	1	Extremo 2A	-9E-07	56.961	-2.5E-06	-8.3749	1.2E-06	-163.78
4504	0	Extremo 1A	-1.8E-07	9.662	-2.7E-07	-11.8712	-1.1E-07	-165.782
4504	0.5	Extremo 1A	-1.8E-07	25.287	-2.7E-07	-11.8712	2.4E-08	-174.519
4504	1	Extremo 1A	-1.8E-07	40.912	-2.7E-07	-11.8712	1.6E-07	-191.069
4504	0	Extremo 2A	-1.4E-06	9.662	-2.4E-06	-11.8688	-1E-06	-165.784
4504	0.5	Extremo 2A	-1.4E-06	25.287	-2.4E-06	-11.8688	1.7E-07	-174.521
4504	1	Extremo 2A	-1.4E-06	40.912	-2.4E-06	-11.8688	1.4E-06	-191.07
4505	0	Extremo 1A	-2.2E-07	-9.96	-1.4E-07	-15.9501	-2.2E-08	-193.792
4505	0.5	Extremo 1A	-2.2E-07	5.665	-1.4E-07	-15.9501	4.7E-08	-192.718
4505	1	Extremo 1A	-2.2E-07	21.29	-1.4E-07	-15.9501	1.2E-07	-199.457
4505	0	Extremo 2A	-1.9E-06	-9.96	-1.4E-06	-15.9459	-2.9E-07	-193.794
4505	0.5	Extremo 2A	-1.9E-06	5.665	-1.4E-06	-15.9459	3.9E-07	-192.721
4505	1	Extremo 2A	-1.9E-06	21.29	-1.4E-06	-15.9459	1.1E-06	-199.459
4506	0	Extremo 1A	-2.3E-07	-32.872	5.9E-08	-20.6293	8.2E-08	-205.855
4506	0.5	Extremo 1A	-2.3E-07	-17.247	5.9E-08	-20.6293	5.3E-08	-193.325
4506	1	Extremo 1A	-2.3E-07	-1.622	5.9E-08	-20.6293	2.3E-08	-188.608
4506	0	Extremo 2A	-2E-06	-32.872	3.2E-07	-20.6226	6.2E-07	-205.858
4506	0.5	Extremo 2A	-2E-06	-17.247	3.2E-07	-20.6226	4.6E-07	-193.328
4506	1	Extremo 2A	-2E-06	-1.622	3.2E-07	-20.6226	3E-07	-188.611
4507	0	Extremo 1A	-2E-07	-55.416	2.3E-07	-24.0355	1.6E-07	-198.54
4507	0.5	Extremo 1A	-2E-07	-39.791	2.3E-07	-24.0355	3.9E-08	-174.738
4507	1	Extremo 1A	-2E-07	-24.166	2.3E-07	-24.0355	-7.8E-08	-158.749
4507	0	Extremo 2A	-1.8E-06	-55.416	1.9E-06	-24.025	1.3E-06	-198.542
4507	0.5	Extremo 2A	-1.8E-06	-39.791	1.9E-06	-24.025	3.6E-07	-174.74
4507	1	Extremo 2A	-1.8E-06	-24.166	1.9E-06	-24.025	-5.9E-07	-158.751
4508	0	Extremo 1A	-1.4E-07	-75.558	3.1E-07	-28.4936	1.8E-07	-169.017
4508	0.5	Extremo 1A	-1.4E-07	-59.933	3.1E-07	-28.4936	2.5E-08	-135.144
4508	1	Extremo 1A	-1.4E-07	-44.308	3.1E-07	-28.4936	-1.3E-07	-109.084
4508	0	Extremo 2A	-1.2E-06	-75.558	2.7E-06	-28.4701	1.6E-06	-169.018
4508	0.5	Extremo 2A	-1.2E-06	-59.933	2.7E-06	-28.4701	2.5E-07	-135.145
4508	1	Extremo 2A	-1.2E-06	-44.308	2.7E-06	-28.4701	-1.1E-06	-109.084
4509	0	Extremo 1A	-1.4E-07	26.486	-3.8E-07	-5.8768	-1.9E-07	-123.208
4509	0.5	Extremo 1A	-1.4E-07	42.111	-3.8E-07	-5.8768	-6.4E-11	-140.357
4509	1	Extremo 1A	-1.4E-07	57.736	-3.8E-07	-5.8768	1.9E-07	-165.319
4509	0	Extremo 2A	-1.1E-06	26.486	-3.1E-06	-5.876	-1.6E-06	-123.207
4509	0.5	Extremo 2A	-1.1E-06	42.111	-3.1E-06	-5.876	-4.7E-08	-140.357
4509	1	Extremo 2A	-1.1E-06	57.736	-3.1E-06	-5.876	1.5E-06	-165.319
4510	0	Extremo 1A	-2.3E-07	8.557	-3.5E-07	-8.3371	-1.5E-07	-169.674
4510	0.5	Extremo 1A	-2.3E-07	24.182	-3.5E-07	-8.3371	3E-08	-177.859
4510	1	Extremo 1A	-2.3E-07	39.807	-3.5E-07	-8.3371	2.1E-07	-193.856
4510	0	Extremo 2A	-1.8E-06	8.557	-3.1E-06	-8.3339	-1.3E-06	-169.674
4510	0.5	Extremo 2A	-1.8E-06	24.182	-3.1E-06	-8.3339	2.1E-07	-177.859
4510	1	Extremo 2A	-1.8E-06	39.807	-3.1E-06	-8.3339	1.8E-06	-193.856
4511	0	Extremo 1A	-2.8E-07	-11.865	-1.8E-07	-10.4042	-2.9E-08	-199.334
4511	0.5	Extremo 1A	-2.8E-07	3.76	-1.8E-07	-10.4042	6E-08	-197.307
4511	1	Extremo 1A	-2.8E-07	19.385	-1.8E-07	-10.4042	1.5E-07	-203.093
4511	0	Extremo 2A	-2.4E-06	-11.865	-1.8E-06	-10.3994	-3.9E-07	-199.334
4511	0.5	Extremo 2A	-2.4E-06	3.76	-1.8E-06	-10.3994	4.9E-07	-197.308
4511	1	Extremo 2A	-2.4E-06	19.385	-1.8E-06	-10.3994	1.4E-06	-203.094
4512	0	Extremo 1A	-3E-07	-34.154	7.3E-08	-12.304	1E-07	-210.377
4512	0.5	Extremo 1A	-3E-07	-18.529	7.3E-08	-12.304	6.7E-08	-197.206
4512	1	Extremo 1A	-3E-07	-2.904	7.3E-08	-12.304	3.1E-08	-191.848
4512	0	Extremo 2A	-2.6E-06	-34.154	3.7E-07	-12.2975	7.7E-07	-210.377
4512	0.5	Extremo 2A	-2.6E-06	-18.529	3.7E-07	-12.2975	5.9E-07	-197.207
4512	1	Extremo 2A	-2.6E-06	-2.904	3.7E-07	-12.2975	4.1E-07	-191.848
4513	0	Extremo 1A	-2.6E-07	-56.373	3E-07	-13.9298	2E-07	-200.708
4513	0.5	Extremo 1A	-2.6E-07	-40.748	3E-07	-13.9298	5E-08	-176.428
4513	1	Extremo 1A	-2.6E-07	-25.123	3E-07	-13.9298	-9.8E-08	-159.96
4513	0	Extremo 2A	-2.3E-06	-56.373	2.4E-06	-13.92	1.7E-06	-200.708
4513	0.5	Extremo 2A	-2.3E-06	-40.748	2.4E-06	-13.92	4.7E-07	-176.428
4513	1	Extremo 2A	-2.3E-06	-25.123	2.4E-06	-13.92	-7.3E-07	-159.96
4514	0	Extremo 1A	-1.8E-07	-76.73	3.9E-07	-16.8878	2.3E-07	-169.408
4514	0.5	Extremo 1A	-1.8E-07	-61.105	3.9E-07	-16.8878	3.2E-08	-134.949
4514	1	Extremo 1A	-1.8E-07	-45.48	3.9E-07	-16.8878	-1.6E-07	-108.303
4514	0	Extremo 2A	-1.6E-06	-76.73	3.4E-06	-16.8649	2E-06	-169.408
4514	0.5	Extremo 2A	-1.6E-06	-61.105	3.4E-06	-16.8649	3.2E-07	-134.949
4514	1	Extremo 2A	-1.6E-06	-45.48	3.4E-06	-16.8649	-1.4E-06	-108.303
4515	0	Extremo 1A	-1.8E-07	26.586	-4.8E-07	-2.1034	-2.4E-07	-123.989
4515	0.5	Extremo 1A	-1.8E-07	42.211	-4.8E-07	-2.1034	-6.5E-10	-141.188
4515	1	Extremo 1A	-1.8E-07	57.836	-4.8E-07	-2.1034	2.4E-07	-166.199
4515	0	Extremo 2A	-1.4E-06	26.586	-4E-06	-2.1029	-2.1E-06	-123.988
4515	0.5	Extremo 2A	-1.4E-06	42.211	-4E-06	-2.1029	-6.9E-08	-141.187
4515	1	Extremo 2A	-1.4E-06	57.836	-4E-06	-2.1029	1.9E-06	-166.198
4516	0	Extremo 1A	-2.9E-07	7.9	-4.5E-07	-2.9504	-1.9E-07	-171.616
4516	0.5	Extremo 1A	-2.9E-07	23.525	-4.5E-07	-2.9504	3.7E-08	-179.472
4516	1	Extremo 1A	-2.9E-07	39.15	-4.5E-07	-2.9504	2.6E-07	-195.14
4516	0	Extremo 2A	-2.3E-06	7.9	-4E-06	-2.9473	-1.7E-06	-171.614
4516	0.5	Extremo 2A	-2.3E-06	23.525	-4E-06	-2.9473	2.6E-07	-179.47
4516	1	Extremo 2A	-2.3E-06	39.15	-4E-06	-2.9473	2.2E-06	-195.139
4517	0	Extremo 1A	-3.6E-07	-12.781	-2.3E-07	-3.5799	-3.9E-08	-201.603
4517	0.5	Extremo 1A	-3.6E-07	2.844	-2.3E-07	-3.5799	7.6E-08	-199.119
4517	1	Extremo 1A	-3.6E-07	18.469	-2.3E-07	-3.5799	1.9E-07	-204.448
4517	0	Extremo 2A	-3E-06	-12.78	-2.3E-06	-3.5752	-5.3E-07	-201.601
4517	0.5	Extremo 2A	-3E-06	2.845	-2.3E-06	-3.5752	6.2E-07	-199.117
4517	1	Extremo 2A	-3E-06	18.47	-2.3E-06	-3.5752	1.8E-06	-204.446
4518	0	Extremo 1A	-3.8E-07	-34.661	9E-08	-4.1088	1.3E-07	-212.086
4518	0.5	Extremo 1A	-3.8E-07	-19.036	9E-08	-4.1088	8.6E-08	-198.662
4518	1	Extremo 1A	-3.8E-07	-3.411	9E-08	-4.1088	4.1E-08	-193.05
4518	0	Extremo 2A	-3.3E-06	-34.66	4.2E-07	-4.1023	9.6E-07	-212.084
4518	0.5	Extremo 2A	-3.3E-06	-19.035	4.2E-07	-4.1023	7.5E-07	-198.66
4518	1	Extremo 2A	-3.3E-06	-3.41	4.2E-07	-4.1023	5.4E-07	-193.049
4519	0	Extremo 1A	-3.3E-07	-56.652	3.8E-07	-4.5937	2.5E-07	-201.632
4519	0.5	Extremo 1A	-3.3E-07	-41.027	3.8E-07	-4.5937	6.4E-08	-177.212
4519	1	Extremo 1A	-3.3E-07	-25.402	3.8E-07	-4.5937	-1.2E-07	-160.605
4519	0	Extremo 2A	-2.9E-06	-56.651	3E-06	-4.584	2.1E-06	-201.631
4519	0.5	Extremo 2A	-2.9E-06	-41.026	3E-06	-4.584	6.1E-07	-177.211
4519	1	Extremo 2A	-2.9E-06	-25.401	3E-06	-4.584	-9.1E-07	-160.604
4520	0	Extremo 1A	-2.3E-07	-77.074	5E-07	-5.6093	2.9E-07	-169.695
4520	0.5	Extremo 1A	-2.3E-07	-61.449	5E-07	-5.6093	4.1E-08	-135.065
4520	1	Extremo 1A	-2.3E-07	-45.824	5E-07	-5.6093	-2.1E-07	-108.247
4520	0	Extremo 2A	-2E-06	-77.073	4.4E-06	-5.5864	2.6E-06	-169.695
4520	0.5	Extremo 2A	-2E-06	-61.448	4.4E-06	-5.5864	4.2E-07	-135.064
4520	1	Extremo 2A	-2E-06	-45.823	4.4E-06	-5.5864	-1.8E-06	-108.246
4521	0	Extremo 1A	-2.3E-07	26.586	-6.1E-07	2.1055	-3.1E-07	-123.99
4521	0.5	Extremo 1A	-2.3E-07	42.211	-6.1E-07	2.1055	-1.6E-09	-141.189
4521	1	Extremo 1A	-2.3E-07	57.836	-6.1E-07	2.1055	3E-07	-166.201
4521	0	Extremo 2A	-1.8E-06	26.586	-5.1E-06	2.1049	-2.6E-06	-123.988
4521	0.5	Extremo 2A	-1.8E-06	42.211	-5.1E-06	2.1049	-9.9E-08	-141.187
4521	1	Extremo 2A	-1.8E-06	57.836	-5.1E-06	2.1049	2.4E-06	-166.199
4522	0	Extremo 1A	-3.6E-07	7.899	-5.7E-07	2.9452	-2.4E-07	-171.619
4522	0.5	Extremo 1A	-3.6E-07	23.524	-5.7E-07	2.9452	4.7E-08	-179.475
4522	1	Extremo 1A	-3.6E-07	39.149	-5.7E-07	2.9452	3.3E-07	-195.143
4522	0	Extremo 2A	-2.9E-06	7.9	-5.1E-06	2.9473	-2.2E-06	-171.615
4522	0.5	Extremo 2A	-2.9E-06	23.525	-5.1E-06	2.9473	3.2E-07	-179.471
4522	1	Extremo 2A	-2.9E-06	39.15	-5.1E-06	2.9473	2.9E-06	-195.139
4523	0	Extremo 1A	-4.6E-07	-12.781	-3E-07	3.5695	-5.2E-08	-201.607
4523	0.5	Extremo 1A	-4.6E-07	2.844	-3E-07	3.5695	9.6E-08	-199.123
4523	1	Extremo 1A	-4.6E-07	18.469	-3E-07	3.5695	2.4E-07	-204.451
4523	0	Extremo 2A	-3.8E-06	-12.78	-3E-06	3.5737	-7.1E-07	-201.602
4523	0.5	Extremo 2A	-3.8E-06	2.845	-3E-06	3.5737	7.8E-07	-199.118
4523	1	Extremo 2A	-3.8E-06	18.47	-3E-06	3.5737	2.3E-06	-204.447
4524	0	Extremo 1A	-4.8E-07	-34.661	1.1E-07	4.0924	1.6E-07	-212.089
4524	0.5	Extremo 1A	-4.8E-07	-19.036	1.1E-07	4.0924	1.1E-07	-198.665
4524	1	Extremo 1A	-4.8E-07	-3.411	1.1E-07	4.0924	5.4E-08	-193.054
4524	0	Extremo 2A	-4.2E-06	-34.66	4.7E-07	4.0989	1.2E-06	-212.085
4524	0.5	Extremo 2A	-4.2E-06	-19.035	4.7E-07	4.0989	9.6E-07	-198.661
4524	1	Extremo 2A	-4.2E-06	-3.41	4.7E-07	4.0989	7.3E-07	-193.05
4525	0	Extremo 1A	-4.2E-07	-56.652	4.8E-07	4.5669	3.2E-07	-201.635
4525	0.5	Extremo 1A	-4.2E-07	-41.027	4.8E-07	4.5669	8.2E-08	-177.215
4525	1	Extremo 1A	-4.2E-07	-25.402	4.8E-07	4.5669	-1.6E-07	-160.608
4525	0	Extremo 2A	-3.7E-06	-56.651	3.8E-06	4.5772	2.7E-06	-201.632

4525	0.5	Extremo 2A	-3.7E-06	-41.026	3.8E-06	4.5772	7.8E-07	-177.212
4525	1	Extremo 2A	-3.7E-06	-25.401	3.8E-06	4.5772	-1.1E-06	-160.605
4526	0	Extremo 1A	-2.9E-07	-77.074	6.4E-07	5.5432	3.7E-07	-169.697
4526	0.5	Extremo 1A	-2.9E-07	-61.449	6.4E-07	5.5432	5.4E-08	-135.066
4526	1	Extremo 1A	-2.9E-07	-45.824	6.4E-07	5.5432	-2.7E-07	-108.248
4526	0	Extremo 2A	-2.6E-06	-77.073	5.6E-06	5.5668	3.3E-06	-169.695
4526	0.5	Extremo 2A	-2.6E-06	-61.448	5.6E-06	5.5668	5.4E-07	-135.065
4526	1	Extremo 2A	-2.6E-06	-45.823	5.6E-06	5.5668	-2.2E-06	-108.247
4527	0	Extremo 1A	-2.9E-07	26.487	-7.7E-07	5.8815	-3.9E-07	-123.211
4527	0.5	Extremo 1A	-2.9E-07	42.112	-7.7E-07	5.8815	-3.1E-09	-140.361
4527	1	Extremo 1A	-2.9E-07	57.737	-7.7E-07	5.8815	3.8E-07	-165.324
4527	0	Extremo 2A	-2.2E-06	26.487	-6.4E-06	5.8787	-3.4E-06	-123.208
4527	0.5	Extremo 2A	-2.2E-06	42.112	-6.4E-06	5.8787	-1.4E-07	-140.358
4527	1	Extremo 2A	-2.2E-06	57.737	-6.4E-06	5.8787	3.1E-06	-165.32
4528	0	Extremo 1A	-4.6E-07	8.555	-7.3E-07	8.3349	-3.1E-07	-169.684
4528	0.5	Extremo 1A	-4.6E-07	24.18	-7.3E-07	8.3349	5.9E-08	-177.868
4528	1	Extremo 1A	-4.6E-07	39.805	-7.3E-07	8.3349	4.2E-07	-193.864
4528	0	Extremo 2A	-3.7E-06	8.556	-6.5E-06	8.3348	-2.9E-06	-169.677
4528	0.5	Extremo 2A	-3.7E-06	24.181	-6.5E-06	8.3348	3.9E-07	-177.861
4528	1	Extremo 2A	-3.7E-06	39.806	-6.5E-06	8.3348	3.6E-06	-193.858
4529	0	Extremo 1A	-5.8E-07	-11.867	-3.8E-07	10.3956	-6.9E-08	-199.347
4529	0.5	Extremo 1A	-5.8E-07	3.758	-3.8E-07	10.3956	1.2E-07	-197.319
4529	1	Extremo 1A	-5.8E-07	19.383	-3.8E-07	10.3956	3.1E-07	-203.105
4529	0	Extremo 2A	-4.9E-06	-11.865	-3.9E-06	10.3985	-9.5E-07	-199.338
4529	0.5	Extremo 2A	-4.9E-06	3.76	-3.9E-06	10.3985	9.9E-07	-197.311
4529	1	Extremo 2A	-4.9E-06	19.385	-3.9E-06	10.3985	2.9E-06	-203.097
4530	0	Extremo 1A	-6.1E-07	-34.154	1.4E-07	12.2874	2.1E-07	-210.389
4530	0.5	Extremo 1A	-6.1E-07	-18.529	1.4E-07	12.2874	1.4E-07	-197.219
4530	1	Extremo 1A	-6.1E-07	-2.904	1.4E-07	12.2874	7.2E-08	-191.86
4530	0	Extremo 2A	-5.3E-06	-34.153	5.1E-07	12.294	1.5E-06	-210.381
4530	0.5	Extremo 2A	-5.3E-06	-18.528	5.1E-07	12.294	1.2E-06	-197.211
4530	1	Extremo 2A	-5.3E-06	-2.903	5.1E-07	12.294	9.8E-07	-191.853
4531	0	Extremo 1A	-5.4E-07	-56.373	6E-07	13.901	4.1E-07	-200.718
4531	0.5	Extremo 1A	-5.4E-07	-40.748	6E-07	13.901	1.1E-07	-176.438
4531	1	Extremo 1A	-5.4E-07	-25.123	6E-07	13.901	-2E-07	-159.97
4531	0	Extremo 2A	-4.8E-06	-56.372	4.8E-06	13.9125	3.4E-06	-200.712
4531	0.5	Extremo 2A	-4.8E-06	-40.747	4.8E-06	13.9125	1E-06	-176.432
4531	1	Extremo 2A	-4.8E-06	-25.122	4.8E-06	13.9125	-1.4E-06	-159.964
4532	0	Extremo 1A	-3.7E-07	-76.732	8.2E-07	16.8192	4.8E-07	-169.414
4532	0.5	Extremo 1A	-3.7E-07	-61.107	8.2E-07	16.8192	6.9E-08	-134.954
4532	1	Extremo 1A	-3.7E-07	-45.482	8.2E-07	16.8192	-3.4E-07	-108.307
4532	0	Extremo 2A	-3.4E-06	-76.731	7.1E-06	16.8443	4.3E-06	-169.41
4532	0.5	Extremo 2A	-3.4E-06	-61.106	7.1E-06	16.8443	7.1E-07	-134.951
4532	1	Extremo 2A	-3.4E-06	-45.481	7.1E-06	16.8443	-2.8E-06	-108.305
4533	0	Extremo 1A	-3.7E-07	25.715	-9.8E-07	8.3856	-5E-07	-122.447
4533	0.5	Extremo 1A	-3.7E-07	41.34	-9.8E-07	8.3856	-5.4E-09	-139.21
4533	1	Extremo 1A	-3.7E-07	56.965	-9.8E-07	8.3856	4.9E-07	-163.786
4533	0	Extremo 2A	-2.8E-06	25.712	-8.2E-06	8.379	-4.3E-06	-122.444
4533	0.5	Extremo 2A	-2.8E-06	41.337	-8.2E-06	8.379	-2E-07	-139.206
4533	1	Extremo 2A	-2.8E-06	56.962	-8.2E-06	8.379	3.9E-06	-163.781
4534	0	Extremo 1A	-5.8E-07	9.66	-9.3E-07	11.8767	-3.9E-07	-165.799
4534	0.5	Extremo 1A	-5.8E-07	25.285	-9.3E-07	11.8767	7.3E-08	-174.535
4534	1	Extremo 1A	-5.8E-07	40.91	-9.3E-07	11.8767	5.4E-07	-191.084
4534	0	Extremo 2A	-4.7E-06	9.662	-8.3E-06	11.8719	-3.7E-06	-165.788
4534	0.5	Extremo 2A	-4.7E-06	25.287	-8.3E-06	11.8719	4.8E-07	-174.525
4534	1	Extremo 2A	-4.7E-06	40.912	-8.3E-06	11.8719	4.6E-06	-191.074
4535	0	Extremo 1A	-7.4E-07	-9.962	-4.9E-07	15.9465	-9.2E-08	-193.818
4535	0.5	Extremo 1A	-7.4E-07	5.663	-4.9E-07	15.9465	1.5E-07	-192.743
4535	1	Extremo 1A	-7.4E-07	21.288	-4.9E-07	15.9465	4E-07	-199.481
4535	0	Extremo 2A	-6.2E-06	-9.96	-5.1E-06	15.9464	-1.3E-06	-193.802
4535	0.5	Extremo 2A	-6.2E-06	5.665	-5.1E-06	15.9464	1.3E-06	-192.728
4535	1	Extremo 2A	-6.2E-06	21.29	-5.1E-06	15.9464	3.8E-06	-199.467
4536	0	Extremo 1A	-7.8E-07	-32.872	1.6E-07	20.6113	2.6E-07	-205.882
4536	0.5	Extremo 1A	-7.8E-07	-17.247	1.6E-07	20.6113	1.8E-07	-193.352
4536	1	Extremo 1A	-7.8E-07	-1.622	1.6E-07	20.6113	9.6E-08	-188.635
4536	0	Extremo 2A	-6.8E-06	-32.871	5.4E-07	20.6185	1.8E-06	-205.866
4536	0.5	Extremo 2A	-6.8E-06	-17.246	5.4E-07	20.6185	1.6E-06	-193.337
4536	1	Extremo 2A	-6.8E-06	-1.621	5.4E-07	20.6185	1.3E-06	-188.62
4537	0	Extremo 1A	-6.8E-07	-55.416	7.7E-07	24.0007	5.2E-07	-198.56
4537	0.5	Extremo 1A	-6.8E-07	-39.791	7.7E-07	24.0007	1.4E-07	-174.759
4537	1	Extremo 1A	-6.8E-07	-24.166	7.7E-07	24.0007	-2.5E-07	-158.77
4537	0	Extremo 2A	-6.1E-06	-55.415	6.1E-06	24.0153	4.4E-06	-198.549
4537	0.5	Extremo 2A	-6.1E-06	-39.79	6.1E-06	24.0153	1.3E-06	-174.748
4537	1	Extremo 2A	-6.1E-06	-24.165	6.1E-06	24.0153	-1.7E-06	-158.759
4538	0	Extremo 1A	-4.8E-07	-75.563	1E-06	28.4193	6.1E-07	-169.028
4538	0.5	Extremo 1A	-4.8E-07	-59.938	1E-06	28.4193	9E-08	-135.152
4538	1	Extremo 1A	-4.8E-07	-44.313	1E-06	28.4193	-4.3E-07	-109.089
4538	0	Extremo 2A	-4.3E-06	-75.56	9.1E-06	28.4475	5.4E-06	-169.022
4538	0.5	Extremo 2A	-4.3E-06	-59.935	9.1E-06	28.4475	9.2E-07	-135.148
4538	1	Extremo 2A	-4.3E-06	-44.31	9.1E-06	28.4475	-3.6E-06	-109.087
4539	0	Extremo 1A	-4.6E-07	22.791	-1.2E-06	9.3981	-6.3E-07	-124.684
4539	0.5	Extremo 1A	-4.6E-07	38.416	-1.2E-06	9.3981	-8.8E-09	-139.986
4539	1	Extremo 1A	-4.6E-07	54.041	-1.2E-06	9.3981	6.2E-07	-163.1
4539	0	Extremo 2A	-3.5E-06	22.783	-1E-05	9.387	-5.5E-06	-124.688
4539	0.5	Extremo 2A	-3.5E-06	38.408	-1E-05	9.387	-2.8E-07	-139.986
4539	1	Extremo 2A	-3.5E-06	54.033	-1E-05	9.387	4.9E-06	-163.096
4540	0	Extremo 1A	-7.4E-07	9.604	-1.2E-06	10.9701	-5E-07	-161.384
4540	0.5	Extremo 1A	-7.4E-07	25.229	-1.2E-06	10.9701	9.2E-08	-170.092
4540	1	Extremo 1A	-7.4E-07	40.854	-1.2E-06	10.9701	6.9E-07	-186.613
4540	0	Extremo 2A	-5.9E-06	9.603	-1.1E-05	10.9551	-4.8E-06	-161.371
4540	0.5	Extremo 2A	-5.9E-06	25.228	-1.1E-05	10.9551	5.8E-07	-170.079
4540	1	Extremo 2A	-5.9E-06	40.853	-1.1E-05	10.9551	5.9E-06	-186.599
4541	0	Extremo 1A	-9.4E-07	-8.085	-6.4E-07	18.0518	-1.2E-07	-182.661
4541	0.5	Extremo 1A	-9.4E-07	7.54	-6.4E-07	18.0518	2E-07	-182.524
4541	1	Extremo 1A	-9.4E-07	23.165	-6.4E-07	18.0518	5.2E-07	-190.2
4541	0	Extremo 2A	-7.8E-06	-8.084	-6.6E-06	18.0443	-1.7E-06	-182.632
4541	0.5	Extremo 2A	-7.8E-06	7.541	-6.6E-06	18.0443	1.6E-06	-182.496
4541	1	Extremo 2A	-7.8E-06	23.166	-6.6E-06	18.0443	4.9E-06	-190.172
4542	0	Extremo 1A	-1E-06	-29.177	2E-07	29.8532	3.3E-07	-194.748
4542	0.5	Extremo 1A	-1E-06	-13.552	2E-07	29.8532	2.3E-07	-184.065
4542	1	Extremo 1A	-1E-06	2.073	2E-07	29.8532	1.3E-07	-181.196
4542	0	Extremo 2A	-8.6E-06	-29.175	5.3E-07	29.8631	2.3E-06	-194.716
4542	0.5	Extremo 2A	-8.6E-06	-13.55	5.3E-07	29.8631	2E-06	-184.034
4542	1	Extremo 2A	-8.6E-06	2.075	5.3E-07	29.8631	1.8E-06	-181.166
4543	0	Extremo 1A	-8.7E-07	-51.602	9.7E-07	36.4284	6.6E-07	-194.462
4543	0.5	Extremo 1A	-8.7E-07	-35.977	9.7E-07	36.4284	1.7E-07	-172.567
4543	1	Extremo 1A	-8.7E-07	-20.352	9.7E-07	36.4284	-3.1E-07	-158.485
4543	0	Extremo 2A	-7.8E-06	-51.599	7.7E-06	36.4509	5.5E-06	-194.442
4543	0.5	Extremo 2A	-7.8E-06	-35.974	7.7E-06	36.4509	1.7E-06	-172.549
4543	1	Extremo 2A	-7.8E-06	-20.349	7.7E-06	36.4509	-2.2E-06	-158.469
4544	0	Extremo 1A	-6.1E-07	-72.178	1.3E-06	39.9347	7.8E-07	-169.775
4544	0.5	Extremo 1A	-6.1E-07	-56.553	1.3E-06	39.9347	1.2E-07	-137.592
4544	1	Extremo 1A	-6.1E-07	-40.928	1.3E-06	39.9347	-5.5E-07	-113.222
4544	0	Extremo 2A	-5.6E-06	-72.17	1.2E-05	39.9673	7E-06	-169.767
4544	0.5	Extremo 2A	-5.6E-06	-56.545	1.2E-05	39.9673	1.2E-06	-137.589
4544	1	Extremo 2A	-5.6E-06	-40.92	1.2E-05	39.9673	-4.6E-06	-113.223
4545	0	Extremo 1A	-5.8E-07	17.993	-1.6E-06	12.224	-8.1E-07	-137.432
4545	0.5	Extremo 1A	-5.8E-07	33.618	-1.6E-06	12.224	-1.4E-08	-150.335
4545	1	Extremo 1A	-5.8E-07	49.243	-1.6E-06	12.224	7.8E-07	-171.05
4545	0	Extremo 2A	-4.4E-06	17.978	-1.3E-05	12.2142	-7E-06	-137.461
4545	0.5	Extremo 2A	-4.4E-06	33.603	-1.3E-05	12.2142	-4E-07	-150.356
4545	1	Extremo 2A	-4.4E-06	49.228	-1.3E-05	12.2142	6.2E-06	-171.064
4546	0	Extremo 1A	-9.3E-07	-0.335	-1.5E-06	-0.2135	-6.5E-07	-165.352
4546	0.5	Extremo 1A	-9.3E-07	15.29	-1.5E-06	-0.2135	1.1E-07	-169.09
4546	1	Extremo 1A	-9.3E-07	30.915	-1.5E-06	-0.2135	8.8E-07	-180.642
4546	0	Extremo 2A	-7.4E-06	-0.356	-1.4E-05	-0.2518	-6.1E-06	-165.354
4546	0.5	Extremo 2A	-7.4E-06	15.269	-1.4E-05	-0.2518	7E-07	-169.082
4546	1	Extremo 2A	-7.4E-06	30.894	-1.4E-05	-0.2518	7.6E-06	-180.623
4547	0	Extremo 1A	-1.2E-06	-13.301	-8.3E-07	11.8568	-1.7E-07	-161.974
4547	0.5	Extremo 1A	-1.2E-06	2.324	-8.3E-07	11.8568	2.5E-07	-159.229
4547	1	Extremo 1A	-1.2E-06	17.949	-8.3E-07	11.8568	6.6E-07	-164.297
4547	0	Extremo 2A	-1E-05	-13.316	-8.6E-06	11.8312	-2.3E-06	-161.921
4547	0.5	Extremo 2A	-1E-05	2.309	-8.6E-06	11.8312	2E-06	-159.169
4547	1	Extremo 2A	-1E-05	17.934	-8.6E-06	11.8312	6.3E-06	-164.229
4548	0	Extremo 1A	-1.3E-06	-15.543	2.4E-07	42.266	4.1E-07	-165.229
4548	0.5	Extremo 1A	-1.3E-06	0.082	2.4E-07	42.266	2.9E-07	-161.364
4548	1	Extremo 1A	-1.3E-06	15.707	2.4E-07	42.266	1.7E-07	-165.311
4548	0	Extremo 2A	-1.1E-05	-15.529	4.6E-07	42.2851	2.8E-06	-165.155
4548	0.5	Extremo 2A	-1.1E-05	0.096	4.6E-07	42.2851	2.6E-06	-161.297
4548	1	Extremo 2A	-1.1E-05	15.721	4.6E-07	42.2851	2.4E-06	-165.251
4549	0	Extremo 1A	-1.1E-06	-34.692	1.2E-06	55.2284	8.4E-07	-186.856
4549	0.5	Extremo 1A	-1.1E-06	-19.067	1.2E-06	55.2284	2.3E-07	-173.416
4549	1	Extremo 1A	-1.1E-06	-3.442	1.2E-06	55.2284	-3.9E-07	-167.789
4549	0	Extremo 2A	-1E-05	-34.668	9.7E-06	55.2704	7E-06	-186.821

4549	0.5	Extremo 2A	-1E-05	-19.043	9.7E-06	55.2704	2.2E-06	-173.393
4549	1	Extremo 2A	-1E-05	-3.418	9.7E-06	55.2704	-2.7E-06	-167.778
4550	0	Extremo 1A	-7.8E-07	-65.613	1.7E-06	47.5144	1E-06	-178.165
4550	0.5	Extremo 1A	-7.8E-07	-49.988	1.7E-06	47.5144	1.5E-07	-149.265
4550	1	Extremo 1A	-7.8E-07	-34.363	1.7E-06	47.5144	-7E-07	-128.177
4550	0	Extremo 2A	-7.2E-06	-65.596	1.5E-05	47.5484	9E-06	-178.166
4550	0.5	Extremo 2A	-7.2E-06	-49.971	1.5E-05	47.5484	1.6E-06	-149.274
4550	1	Extremo 2A	-7.2E-06	-34.346	1.5E-05	47.5484	-5.8E-06	-128.195
4551	0	Extremo 1A	-7.4E-07	37.338	-2E-06	30.782	-1E-06	-168.087
4551	0.5	Extremo 1A	-7.4E-07	52.963	-2E-06	30.782	-2.1E-08	-190.662
4551	1	Extremo 1A	-7.4E-07	68.588	-2E-06	30.782	9.9E-07	-221.05
4551	0	Extremo 2A	-5.5E-06	37.354	-1.7E-05	30.8023	-8.9E-06	-168.17
4551	0.5	Extremo 2A	-5.5E-06	52.979	-1.7E-05	30.8023	-5.6E-07	-190.753
4551	1	Extremo 2A	-5.5E-06	68.604	-1.7E-05	30.8023	7.8E-06	-221.149
4552	0	Extremo 1A	-1.2E-06	-61.225	-1.9E-06	-33.744	-8.3E-07	-214.748
4552	0.5	Extremo 1A	-1.2E-06	-45.6	-1.9E-06	-33.744	1.4E-07	-188.042
4552	1	Extremo 1A	-1.2E-06	-29.975	-1.9E-06	-33.744	1.1E-06	-169.148
4552	0	Extremo 2A	-9.3E-06	-61.346	-1.8E-05	-33.8356	-7.9E-06	-214.84
4552	0.5	Extremo 2A	-9.3E-06	-45.721	-1.8E-05	-33.8356	8.4E-07	-188.074
4552	1	Extremo 2A	-9.3E-06	-30.096	-1.8E-05	-33.8356	9.6E-06	-169.119
4553	0	Extremo 1A	-1.5E-06	-50.363	-1.1E-06	-9.1113	-2.2E-07	-127.056
4553	0.5	Extremo 1A	-1.5E-06	-34.738	-1.1E-06	-9.1113	3.1E-07	-105.781
4553	1	Extremo 1A	-1.5E-06	-19.113	-1.1E-06	-9.1113	8.5E-07	-92.3179
4553	0	Extremo 2A	-1.3E-05	-50.447	-1.1E-05	-9.1727	-3.1E-06	-126.963
4553	0.5	Extremo 2A	-1.3E-05	-34.822	-1.1E-05	-9.1727	2.5E-06	-105.645
4553	1	Extremo 2A	-1.3E-05	-19.197	-1.1E-05	-9.1727	8.1E-06	-92.1405
4554	0	Extremo 1A	-1.6E-06	31.879	2.8E-07	59.8649	5.1E-07	-87.1034
4554	0.5	Extremo 1A	-1.6E-06	47.504	2.8E-07	59.8649	3.7E-07	-106.949
4554	1	Extremo 1A	-1.6E-06	63.129	2.8E-07	59.8649	2.3E-07	-134.607
4554	0	Extremo 2A	-1.4E-05	31.949	3E-07	59.9052	3.5E-06	-86.9173
4554	0.5	Extremo 2A	-1.4E-05	47.574	3E-07	59.9052	3.3E-06	-106.798
4554	1	Extremo 2A	-1.4E-05	63.199	3E-07	59.9052	3.2E-06	-134.491
4555	0	Extremo 1A	-1.4E-06	39.406	1.6E-06	88.6208	1.1E-06	-167.84
4555	0.5	Extremo 1A	-1.4E-06	55.031	1.6E-06	88.6208	2.9E-07	-191.449
4555	1	Extremo 1A	-1.4E-06	70.656	1.6E-06	88.6208	-4.9E-07	-222.871
4555	0	Extremo 2A	-1.3E-05	39.531	1.2E-05	88.7073	8.9E-06	-167.771
4555	0.5	Extremo 2A	-1.3E-05	55.156	1.2E-05	88.7073	2.8E-06	-191.443
4555	1	Extremo 2A	-1.3E-05	70.781	1.2E-05	88.7073	-3.3E-06	-222.927
4556	0	Extremo 1A	-1E-06	-73.672	2.2E-06	35.5559	1.3E-06	-223.529
4556	0.5	Extremo 1A	-1E-06	-58.047	2.2E-06	35.5559	2E-07	-190.599
4556	1	Extremo 1A	-1E-06	-42.422	2.2E-06	35.5559	-8.8E-07	-165.482
4556	0	Extremo 2A	-9.2E-06	-73.665	1.9E-05	35.5675	1.1E-05	-223.588
4556	0.5	Extremo 2A	-9.2E-06	-58.04	1.9E-05	35.5675	2.1E-06	-190.662
4556	1	Extremo 2A	-9.2E-06	-42.415	1.9E-05	35.5675	-7.4E-06	-165.548
4557	0	Extremo 1A	-9.3E-07	233.843	-2.6E-06	82.1933	-1.3E-06	-175.859
4557	0.5	Extremo 1A	-9.3E-07	249.468	-2.6E-06	82.1933	-3.2E-08	-296.687
4557	1	Extremo 1A	-9.3E-07	265.093	-2.6E-06	82.1933	1.2E-06	-425.327
4557	0	Extremo 2A	-6.8E-06	234.17	-2.1E-05	82.3001	-1.1E-05	-175.959
4557	0.5	Extremo 2A	-6.8E-06	249.795	-2.1E-05	82.3001	-7.8E-07	-296.951
4557	1	Extremo 2A	-6.8E-06	265.42	-2.1E-05	82.3001	9.8E-06	-425.755
4558	0	Extremo 1A	-1.5E-06	-333.999	-2.5E-06	-94.3389	-1.1E-06	-425.15
4558	0.5	Extremo 1A	-1.5E-06	-318.374	-2.5E-06	-94.3389	1.8E-07	-262.057
4558	1	Extremo 1A	-1.5E-06	-302.749	-2.5E-06	-94.3389	1.4E-06	-106.776
4558	0	Extremo 2A	-1.2E-05	-334.553	-2.3E-05	-94.5193	-1E-05	-425.586
4558	0.5	Extremo 2A	-1.2E-05	-318.928	-2.3E-05	-94.5193	1E-06	-262.216
4558	1	Extremo 2A	-1.2E-05	-303.303	-2.3E-05	-94.5193	1.2E-05	-106.658
4559	0	Extremo 1A	-1.9E-06	-157.955	-1.4E-06	-35.0717	-3E-07	-70.6677
4559	0.5	Extremo 1A	-1.9E-06	-142.33	-1.4E-06	-35.0717	4E-07	4.4038
4559	1	Extremo 1A	-1.9E-06	-126.705	-1.4E-06	-35.0717	1.1E-06	71.6627
4559	0	Extremo 2A	-1.6E-05	-158.22	-1.5E-05	-35.1665	-4.1E-06	-70.5053
4559	0.5	Extremo 2A	-1.6E-05	-142.595	-1.5E-05	-35.1665	3.2E-06	4.6985
4559	1	Extremo 2A	-1.6E-05	-126.97	-1.5E-05	-35.1665	1.1E-05	72.0899
4560	0	Extremo 1A	-2.1E-06	148.172	3.4E-07	67.6755	6.4E-07	84.6067
4560	0.5	Extremo 1A	-2.1E-06	163.797	3.4E-07	67.6755	4.8E-07	6.6146
4560	1	Extremo 1A	-2.1E-06	179.422	3.4E-07	67.6755	3.1E-07	-79.19
4560	0	Extremo 2A	-1.8E-05	148.394	-6.7E-09	67.7324	4.2E-06	85.04
4560	0.5	Extremo 2A	-1.8E-05	164.019	-6.7E-09	67.7324	4.2E-06	6.9369
4560	1	Extremo 2A	-1.8E-05	179.644	-6.7E-09	67.7324	4.2E-06	-78.9787
4561	0	Extremo 1A	-1.8E-06	333.157	2E-06	133.327	1.4E-06	-89.111
4561	0.5	Extremo 1A	-1.8E-06	348.782	2E-06	133.327	3.7E-07	-259.596
4561	1	Extremo 1A	-1.8E-06	364.407	2E-06	133.327	-6.1E-07	-437.893
4561	0	Extremo 2A	-1.6E-05	333.69	1.5E-05	133.48	1.1E-05	-88.9237

4561	0.5	Extremo 2A	-1.6E-05	349.315	1.5E-05	133.48	3.7E-06	-259.675
4561	1	Extremo 2A	-1.6E-05	364.94	1.5E-05	133.48	-4E-06	-438.238
4562	0	Extremo 1A	-1.3E-06	-226.128	2.8E-06	-24.0048	1.6E-06	-411.566
4562	0.5	Extremo 1A	-1.3E-06	-210.503	2.8E-06	-24.0048	2.5E-07	-302.409
4562	1	Extremo 1A	-1.3E-06	-194.878	2.8E-06	-24.0048	-1.1E-06	-201.063
4562	0	Extremo 2A	-1.2E-05	-226.332	2.4E-05	-24.0781	1.5E-05	-411.882
4562	0.5	Extremo 2A	-1.2E-05	-210.707	2.4E-05	-24.0781	2.7E-06	-302.623
4562	1	Extremo 2A	-1.2E-05	-195.082	2.4E-05	-24.0781	-9.3E-06	-201.176
4563	0	Extremo 1A	-1.2E-06	1027.3	-3.2E-06	0.0072	-1.7E-06	62.8477
4563	0.5	Extremo 1A	-1.2E-06	1042.92	-3.2E-06	0.0072	-4.7E-08	-454.708
4563	1	Extremo 1A	-1.2E-06	1058.55	-3.2E-06	0.0072	1.6E-06	-980.075
4563	0	Extremo 2A	-8.5E-06	1028.88	-2.7E-05	-0.0075	-1.4E-05	63.1227
4563	0.5	Extremo 2A	-8.5E-06	1044.5	-2.7E-05	-0.0075	-1.1E-06	-455.223
4563	1	Extremo 2A	-8.5E-06	1060.13	-2.7E-05	-0.0075	1.2E-05	-981.381
4564	0	Extremo 1A	-1.9E-06	-1193.74	-3.2E-06	0.0115	-1.4E-06	-984.31
4564	0.5	Extremo 1A	-1.9E-06	-1178.11	-3.2E-06	0.0115	2.2E-07	-391.348
4564	1	Extremo 1A	-1.9E-06	-1162.49	-3.2E-06	0.0115	1.8E-06	193.801
4564	0	Extremo 2A	-1.5E-05	-1195.65	-2.9E-05	-0.0072	-1.3E-05	-985.634
4564	0.5	Extremo 2A	-1.5E-05	-1180.02	-2.9E-05	-0.0072	1.2E-06	-391.717
4564	1	Extremo 2A	-1.5E-05	-1164.4	-2.9E-05	-0.0072	1.6E-05	194.387
4565	0	Extremo 1A	-2.5E-06	-265.29	-1.8E-06	0.0125	-4E-07	21.4861
4565	0.5	Extremo 1A	-2.5E-06	-249.665	-1.8E-06	0.0125	5E-07	150.225
4565	1	Extremo 1A	-2.5E-06	-234.04	-1.8E-06	0.0125	1.4E-06	271.151
4565	0	Extremo 2A	-2E-05	-265.725	-1.9E-05	-0.0071	-5.6E-06	21.7823
4565	0.5	Extremo 2A	-2E-05	-250.1	-1.9E-05	-0.0071	4E-06	150.739
4565	1	Extremo 2A	-2E-05	-234.475	-1.9E-05	-0.0071	1.4E-05	271.883
4566	0	Extremo 1A	-2.6E-06	258.284	3.9E-07	0.0134	8E-07	288.403
4566	0.5	Extremo 1A	-2.6E-06	273.909	3.9E-07	0.0134	6.1E-07	155.355
4566	1	Extremo 1A	-2.6E-06	289.534	3.9E-07	0.0134	4.1E-07	14.4944
4566	0	Extremo 2A	-2.3E-05	258.658	-5.3E-07	-0.0068	5.2E-06	289.13
4566	0.5	Extremo 2A	-2.3E-05	274.283	-5.3E-07	-0.0068	5.4E-06	155.895
4566	1	Extremo 2A	-2.3E-05	289.908	-5.3E-07	-0.0068	5.7E-06	14.847
4567	0	Extremo 1A	-2.3E-06	1209.42	2.5E-06	0.0178	1.7E-06	225.109
4567	0.5	Extremo 1A	-2.3E-06	1225.05	2.5E-06	0.0178	4.8E-07	-383.508
4567	1	Extremo 1A	-2.3E-06	1240.67	2.5E-06	0.0178	-7.6E-07	-999.937
4567	0	Extremo 2A	-2.1E-05	1211.18	1.9E-05	-0.0051	1.4E-05	225.74
4567	0.5	Extremo 2A	-2.1E-05	1226.8	1.9E-05	-0.0051	4.8E-06	-383.755
4567	1	Extremo 2A	-2.1E-05	1242.43	1.9E-05	-0.0051	-4.9E-06	-1001.06
4568	0	Extremo 1A	-1.6E-06	-944.702	3.5E-06	0.0442	2.1E-06	-950.409
4568	0.5	Extremo 1A	-1.6E-06	-929.077	3.5E-06	0.0442	3.3E-07	-481.964
4568	1	Extremo 1A	-1.6E-06	-913.452	3.5E-06	0.0442	-1.4E-06	-21.3313
4568	0	Extremo 2A	-1.5E-05	-945.908	3.1E-05	0.0051	1.9E-05	-951.474
4568	0.5	Extremo 2A	-1.5E-05	-930.283	3.1E-05	0.0051	3.5E-06	-482.427
4568	1	Extremo 2A	-1.5E-05	-914.658	3.1E-05	0.0051	-1.2E-05	-21.1914
4569	0	Extremo 1A	-1.5E-06	233.843	-4.1E-06	-82.1791	-2.1E-06	-175.859
4569	0.5	Extremo 1A	-1.5E-06	249.468	-4.1E-06	-82.1791	-6.8E-08	-296.687
4569	1	Extremo 1A	-1.5E-06	265.093	-4.1E-06	-82.1791	2E-06	-425.327
4569	0	Extremo 2A	-1.1E-05	234.17	-3.4E-05	-82.315	-1.8E-05	-175.959
4569	0.5	Extremo 2A	-1.1E-05	249.795	-3.4E-05	-82.315	-1.5E-06	-296.951
4569	1	Extremo 2A	-1.1E-05	265.42	-3.4E-05	-82.315	1.5E-05	-425.755
4570	0	Extremo 1A	-2.4E-06	-333.999	-4.1E-06	94.3618	-1.8E-06	-425.149
4570	0.5	Extremo 1A	-2.4E-06	-318.374	-4.1E-06	94.3618	2.7E-07	-262.056
4570	1	Extremo 1A	-2.4E-06	-302.749	-4.1E-06	94.3618	2.3E-06	-106.775
4570	0	Extremo 2A	-1.9E-05	-334.553	-3.7E-05	94.5048	-1.7E-05	-425.586
4570	0.5	Extremo 2A	-1.9E-05	-318.928	-3.7E-05	94.5048	1.4E-06	-262.215
4570	1	Extremo 2A	-1.9E-05	-303.303	-3.7E-05	94.5048	2E-05	-106.658
4571	0	Extremo 1A	-3.1E-06	-157.955	-2.3E-06	35.0966	-5.3E-07	-70.667
4571	0.5	Extremo 1A	-3.1E-06	-142.33	-2.3E-06	35.0966	6.4E-07	4.4044
4571	1	Extremo 1A	-3.1E-06	-126.705	-2.3E-06	35.0966	1.8E-06	71.6633
4571	0	Extremo 2A	-2.6E-05	-158.22	-2.5E-05	35.1523	-7.5E-06	-70.5051
4571	0.5	Extremo 2A	-2.6E-05	-142.595	-2.5E-05	35.1523	5.1E-06	4.6987
4571	1	Extremo 2A	-2.6E-05	-126.97	-2.5E-05	35.1523	1.8E-05	72.0901
4572	0	Extremo 1A	-3.4E-06	148.172	4.5E-07	-67.6486	1E-06	84.6073
4572	0.5	Extremo 1A	-3.4E-06	163.797	4.5E-07	-67.6486	7.8E-07	6.6152
4572	1	Extremo 1A	-3.4E-06	179.422	4.5E-07	-67.6486	5.5E-07	-79.1895
4572	0	Extremo 2A	-2.9E-05	148.394	-1.4E-06	-67.746	6.3E-06	85.0402
4572	0.5	Extremo 2A	-2.9E-05	164.019	-1.4E-06	-67.746	7E-06	6.9371
4572	1	Extremo 2A	-2.9E-05	179.644	-1.4E-06	-67.746	7.7E-06	-78.9785
4573	0	Extremo 1A	-3E-06	333.157	3.1E-06	-133.291	2.2E-06	-89.1105
4573	0.5	Extremo 1A	-3E-06	348.782	3.1E-06	-133.291	6.2E-07	-259.595
4573	1	Extremo 1A	-3E-06	364.407	3.1E-06	-133.291	-9.5E-07	-437.892
4573	0	Extremo 2A	-2.7E-05	333.69	2.4E-05	-133.491	1.8E-05	-88.9235

4573	0.5	Extremo 2A	-2.7E-05	349.315	2.4E-05	-133.491	6.2E-06	-259.675
4573	1	Extremo 2A	-2.7E-05	364.94	2.4E-05	-133.491	-5.9E-06	-438.238
4574	0	Extremo 1A	-2.1E-06	-226.128	4.5E-06	24.0932	2.7E-06	-411.566
4574	0.5	Extremo 1A	-2.1E-06	-210.503	4.5E-06	24.0932	4.3E-07	-302.408
4574	1	Extremo 1A	-2.1E-06	-194.878	4.5E-06	24.0932	-1.8E-06	-201.063
4574	0	Extremo 2A	-2E-05	-226.332	3.9E-05	24.0884	2.4E-05	-411.882
4574	0.5	Extremo 2A	-2E-05	-210.707	3.9E-05	24.0884	4.6E-06	-302.623
4574	1	Extremo 2A	-2E-05	-195.082	3.9E-05	24.0884	-1.5E-05	-201.175
4575	0	Extremo 1A	-1.8E-06	37.338	-5.2E-06	-30.7681	-2.7E-06	-168.086
4575	0.5	Extremo 1A	-1.8E-06	52.963	-5.2E-06	-30.7681	-9.8E-08	-190.662
4575	1	Extremo 1A	-1.8E-06	68.588	-5.2E-06	-30.7681	2.5E-06	-221.049
4575	0	Extremo 2A	-1.3E-05	37.354	-4.3E-05	-30.8173	-2.3E-05	-168.17
4575	0.5	Extremo 2A	-1.3E-05	52.979	-4.3E-05	-30.8173	-2.1E-06	-190.753
4575	1	Extremo 2A	-1.3E-05	68.604	-4.3E-05	-30.8173	1.9E-05	-221.149
4576	0	Extremo 1A	-3E-06	-61.225	-5.2E-06	33.7667	-2.3E-06	-214.747
4576	0.5	Extremo 1A	-3E-06	-45.6	-5.2E-06	33.7667	3.3E-07	-188.041
4576	1	Extremo 1A	-3E-06	-29.975	-5.2E-06	33.7667	2.9E-06	-169.147
4576	0	Extremo 2A	-2.3E-05	-61.346	-4.8E-05	33.821	-2.2E-05	-214.84
4576	0.5	Extremo 2A	-2.3E-05	-45.721	-4.8E-05	33.821	1.6E-06	-188.073
4576	1	Extremo 2A	-2.3E-05	-30.096	-4.8E-05	33.821	2.5E-05	-169.119
4577	0	Extremo 1A	-4E-06	-50.363	-3.1E-06	9.1362	-7.2E-07	-127.054
4577	0.5	Extremo 1A	-4E-06	-34.738	-3.1E-06	9.1362	8.1E-07	-105.779
4577	1	Extremo 1A	-4E-06	-19.113	-3.1E-06	9.1362	2.3E-06	-92.3165
4577	0	Extremo 2A	-3.3E-05	-50.447	-3.3E-05	9.1585	-1E-05	-126.963
4577	0.5	Extremo 2A	-3.3E-05	-34.822	-3.3E-05	9.1585	6.4E-06	-105.645
4577	1	Extremo 2A	-3.3E-05	-19.197	-3.3E-05	9.1585	2.3E-05	-92.14
4578	0	Extremo 1A	-4.3E-06	31.879	5.1E-07	-59.8379	1.2E-06	-87.1019
4578	0.5	Extremo 1A	-4.3E-06	47.504	5.1E-07	-59.8379	9.9E-07	-106.948
4578	1	Extremo 1A	-4.3E-06	63.129	5.1E-07	-59.8379	7.4E-07	-134.606
4578	0	Extremo 2A	-3.7E-05	31.949	-2.7E-06	-59.9187	7.6E-06	-86.9168
4578	0.5	Extremo 2A	-3.7E-05	47.574	-2.7E-06	-59.9187	8.9E-06	-106.797
4578	1	Extremo 2A	-3.7E-05	63.199	-2.7E-06	-59.9187	1E-05	-134.49
4579	0	Extremo 1A	-3.8E-06	39.406	4E-06	-88.5851	2.8E-06	-167.839
4579	0.5	Extremo 1A	-3.8E-06	55.031	4E-06	-88.5851	8E-07	-191.448
4579	1	Extremo 1A	-3.8E-06	70.656	4E-06	-88.5851	-1.2E-06	-222.87
4579	0	Extremo 2A	-3.5E-05	39.531	3E-05	-88.7175	2.3E-05	-167.771
4579	0.5	Extremo 2A	-3.5E-05	55.156	3E-05	-88.7175	8E-06	-191.442
4579	1	Extremo 2A	-3.5E-05	70.781	3E-05	-88.7175	-7.1E-06	-222.926
4580	0	Extremo 1A	-2.7E-06	-73.672	5.7E-06	-35.4673	3.4E-06	-223.529
4580	0.5	Extremo 1A	-2.7E-06	-58.047	5.7E-06	-35.4673	5.6E-07	-190.599
4580	1	Extremo 1A	-2.7E-06	-42.422	5.7E-06	-35.4673	-2.3E-06	-165.482
4580	0	Extremo 2A	-2.5E-05	-73.665	5E-05	-35.5572	3.1E-05	-223.588
4580	0.5	Extremo 2A	-2.5E-05	-58.04	5E-05	-35.5572	6.1E-06	-190.661
4580	1	Extremo 2A	-2.5E-05	-42.415	5E-05	-35.5572	-1.9E-05	-165.548
4581	0	Extremo 1A	-2.3E-06	17.992	-6.6E-06	-12.2106	-3.5E-06	-137.431
4581	0.5	Extremo 1A	-2.3E-06	33.617	-6.6E-06	-12.2106	-1.4E-07	-150.333
4581	1	Extremo 1A	-2.3E-06	49.242	-6.6E-06	-12.2106	3.2E-06	-171.048
4581	0	Extremo 2A	-1.6E-05	17.978	-5.4E-05	-12.2292	-3E-05	-137.461
4581	0.5	Extremo 2A	-1.6E-05	33.603	-5.4E-05	-12.2292	-2.9E-06	-150.356
4581	1	Extremo 2A	-1.6E-05	49.228	-5.4E-05	-12.2292	2.4E-05	-171.063
4582	0	Extremo 1A	-3.8E-06	-0.335	-6.7E-06	0.2357	-2.9E-06	-165.349
4582	0.5	Extremo 1A	-3.8E-06	15.29	-6.7E-06	0.2357	4.1E-07	-169.088
4582	1	Extremo 1A	-3.8E-06	30.915	-6.7E-06	0.2357	3.8E-06	-180.639
4582	0	Extremo 2A	-2.9E-05	-0.356	-6.1E-05	0.2372	-2.9E-05	-165.353
4582	0.5	Extremo 2A	-2.9E-05	15.269	-6.1E-05	0.2372	1.8E-06	-169.082
4582	1	Extremo 2A	-2.9E-05	30.894	-6.1E-05	0.2372	3.3E-05	-180.622
4583	0	Extremo 1A	-5E-06	-13.301	-4E-06	-11.8321	-9.6E-07	-161.971
4583	0.5	Extremo 1A	-5E-06	2.324	-4E-06	-11.8321	1E-06	-159.227
4583	1	Extremo 1A	-5E-06	17.949	-4E-06	-11.8321	3E-06	-164.295
4583	0	Extremo 2A	-4.1E-05	-13.317	-4.3E-05	-11.8455	-1.4E-05	-161.92
4583	0.5	Extremo 2A	-4.1E-05	2.308	-4.3E-05	-11.8455	8E-06	-159.168
4583	1	Extremo 2A	-4.1E-05	17.933	-4.3E-05	-11.8455	3E-05	-164.229
4584	0	Extremo 1A	-5.5E-06	-15.543	5.6E-07	-42.239	1.6E-06	-165.227
4584	0.5	Extremo 1A	-5.5E-06	0.082	5.6E-07	-42.239	1.3E-06	-161.361
4584	1	Extremo 1A	-5.5E-06	15.707	5.6E-07	-42.239	9.9E-07	-165.309
4584	0	Extremo 2A	-4.7E-05	-15.529	-4.7E-06	-42.2987	9.1E-06	-165.154
4584	0.5	Extremo 2A	-4.7E-05	0.096	-4.7E-06	-42.2987	1.1E-05	-161.296
4584	1	Extremo 2A	-4.7E-05	15.721	-4.7E-06	-42.2987	1.4E-05	-165.25
4585	0	Extremo 1A	-4.9E-06	-34.692	5E-06	-55.1924	3.5E-06	-186.854
4585	0.5	Extremo 1A	-4.9E-06	-19.067	5E-06	-55.1924	1E-06	-173.415
4585	1	Extremo 1A	-4.9E-06	-3.442	5E-06	-55.1924	-1.5E-06	-167.787
4585	0	Extremo 2A	-4.4E-05	-34.668	3.8E-05	-55.2804	2.9E-05	-186.82
4585	0.5	Extremo 2A	-4.4E-05	-19.043	3.8E-05	-55.2804	1E-05	-173.393
4585	1	Extremo 2A	-4.4E-05	-3.418	3.8E-05	-55.2804	-8.5E-06	-167.778
4586	0	Extremo 1A	-3.5E-06	-65.613	7.3E-06	-47.4255	4.4E-06	-178.164
4586	0.5	Extremo 1A	-3.5E-06	-49.988	7.3E-06	-47.4255	7.2E-07	-149.264
4586	1	Extremo 1A	-3.5E-06	-34.363	7.3E-06	-47.4255	-2.9E-06	-128.176
4586	0	Extremo 2A	-3.3E-05	-65.596	6.4E-05	-47.5379	4E-05	-178.165
4586	0.5	Extremo 2A	-3.3E-05	-49.971	6.4E-05	-47.5379	7.9E-06	-149.273
4586	1	Extremo 2A	-3.3E-05	-34.346	6.4E-05	-47.5379	-2.4E-05	-128.194
4587	0	Extremo 1A	-2.9E-06	22.79	-8.4E-06	-9.3857	-4.4E-06	-124.682
4587	0.5	Extremo 1A	-2.9E-06	38.415	-8.4E-06	-9.3857	-2E-07	-139.984
4587	1	Extremo 1A	-2.9E-06	54.04	-8.4E-06	-9.3857	4E-06	-163.097
4587	0	Extremo 2A	-2E-05	22.783	-6.9E-05	-9.4022	-3.8E-05	-124.688
4587	0.5	Extremo 2A	-2E-05	38.408	-6.9E-05	-9.4022	-4E-06	-139.986
4587	1	Extremo 2A	-2E-05	54.033	-6.9E-05	-9.4022	3E-05	-163.096
4588	0	Extremo 1A	-4.8E-06	9.605	-8.6E-06	-10.9486	-3.8E-06	-161.38
4588	0.5	Extremo 1A	-4.8E-06	25.23	-8.6E-06	-10.9486	5E-07	-170.089
4588	1	Extremo 1A	-4.8E-06	40.855	-8.6E-06	-10.9486	4.8E-06	-186.61
4588	0	Extremo 2A	-3.7E-05	9.603	-7.9E-05	-10.9698	-3.7E-05	-161.37
4588	0.5	Extremo 2A	-3.7E-05	25.228	-7.9E-05	-10.9698	2.1E-06	-170.078
4588	1	Extremo 2A	-3.7E-05	40.853	-7.9E-05	-10.9698	4.1E-05	-186.598
4589	0	Extremo 1A	-6.4E-06	-8.085	-5.2E-06	-18.0275	-1.3E-06	-182.656
4589	0.5	Extremo 1A	-6.4E-06	7.54	-5.2E-06	-18.0275	1.3E-06	-182.52
4589	1	Extremo 1A	-6.4E-06	23.165	-5.2E-06	-18.0275	3.9E-06	-190.196
4589	0	Extremo 2A	-5.2E-05	-8.085	-5.7E-05	-18.0586	-1.8E-05	-182.631
4589	0.5	Extremo 2A	-5.2E-05	7.54	-5.7E-05	-18.0586	1E-05	-182.495
4589	1	Extremo 2A	-5.2E-05	23.165	-5.7E-05	-18.0586	3.8E-05	-190.171
4590	0	Extremo 1A	-7E-06	-29.176	6E-07	-29.8261	1.9E-06	-194.743
4590	0.5	Extremo 1A	-7E-06	-13.551	6E-07	-29.8261	1.6E-06	-184.061
4590	1	Extremo 1A	-7E-06	2.074	6E-07	-29.8261	1.3E-06	-181.192
4590	0	Extremo 2A	-6.1E-05	-29.175	-7.8E-06	-29.8766	1.1E-05	-194.715
4590	0.5	Extremo 2A	-6.1E-05	-13.55	-7.8E-06	-29.8766	1.5E-05	-184.033
4590	1	Extremo 2A	-6.1E-05	2.075	-7.8E-06	-29.8766	1.9E-05	-181.164
4591	0	Extremo 1A	-6.3E-06	-51.602	6.3E-06	-36.392	4.5E-06	-194.459
4591	0.5	Extremo 1A	-6.3E-06	-35.977	6.3E-06	-36.392	1.3E-06	-172.564
4591	1	Extremo 1A	-6.3E-06	-20.352	6.3E-06	-36.392	-1.8E-06	-158.482
4591	0	Extremo 2A	-5.7E-05	-51.599	4.7E-05	-36.4607	3.7E-05	-194.441
4591	0.5	Extremo 2A	-5.7E-05	-35.974	4.7E-05	-36.4607	1.4E-05	-172.548
4591	1	Extremo 2A	-5.7E-05	-20.349	4.7E-05	-36.4607	-1E-05	-158.467
4592	0	Extremo 1A	-4.5E-06	-72.177	9.3E-06	-39.8452	5.6E-06	-169.773
4592	0.5	Extremo 1A	-4.5E-06	-56.552	9.3E-06	-39.8452	9.4E-07	-137.591
4592	1	Extremo 1A	-4.5E-06	-40.927	9.3E-06	-39.8452	-3.7E-06	-113.221
4592	0	Extremo 2A	-4.2E-05	-72.17	8.2E-05	-39.9564	5.1E-05	-169.767
4592	0.5	Extremo 2A	-4.2E-05	-56.545	8.2E-05	-39.9564	1E-05	-137.588
4592	1	Extremo 2A	-4.2E-05	-40.92	8.2E-05	-39.9564	-3.1E-05	-113.222
4593	0	Extremo 1A	-3.6E-06	25.714	-1.1E-05	-8.3748	-5.6E-06	-122.443
4593	0.5	Extremo 1A	-3.6E-06	41.339	-1.1E-05	-8.3748	-2.8E-07	-139.207
4593	1	Extremo 1A	-3.6E-06	56.964	-1.1E-05	-8.3748	5.1E-06	-163.782
4593	0	Extremo 2A	-2.5E-05	25.712	-8.7E-05	-8.3943	-4.9E-05	-122.444
4593	0.5	Extremo 2A	-2.5E-05	41.337	-8.7E-05	-8.3943	-5.5E-06	-139.206
4593	1	Extremo 2A	-2.5E-05	56.962	-8.7E-05	-8.3943	3.8E-05	-163.781
4594	0	Extremo 1A	-6.1E-06	9.661	-1.1E-05	-11.8564	-4.9E-06	-165.793
4594	0.5	Extremo 1A	-6.1E-06	25.286	-1.1E-05	-11.8564	6.1E-07	-174.529
4594	1	Extremo 1A	-6.1E-06	40.911	-1.1E-05	-11.8564	6.1E-06	-191.078
4594	0	Extremo 2A	-4.6E-05	9.661	-0.0001	-11.8868	-4.8E-05	-165.787
4594	0.5	Extremo 2A	-4.6E-05	25.286	-0.0001	-11.8868	2.2E-06	-174.524
4594	1	Extremo 2A	-4.6E-05	40.911	-0.0001	-11.8868	5.3E-05	-191.073
4595	0	Extremo 1A	-8.1E-06	-9.962	-6.7E-06	-15.9228	-1.7E-06	-193.811
4595	0.5	Extremo 1A	-8.1E-06	5.663	-6.7E-06	-15.9228	1.6E-06	-192.736
4595	1	Extremo 1A	-8.1E-06	21.288	-6.7E-06	-15.9228	5E-06	-199.474
4595	0	Extremo 2A	-6.6E-05	-9.961	-7.4E-05	-15.9608	-2.4E-05	-193.801
4595	0.5	Extremo 2A	-6.6E-05	5.664	-7.4E-05	-15.9608	1.3E-05	-192.726
4595	1	Extremo 2A	-6.6E-05	21.289	-7.4E-05	-15.9608	5E-05	-199.465
4596	0	Extremo 1A	-8.9E-06	-32.871	6E-07	-20.5841	2.4E-06	-205.875
4596	0.5	Extremo 1A	-8.9E-06	-17.246	6E-07	-20.5841	2.1E-06	-193.346
4596	1	Extremo 1A	-8.9E-06	-1.621	6E-07	-20.5841	1.8E-06	-188.63
4596	0	Extremo 2A	-7.7E-05	-32.872	-1.2E-05	-20.6319	1.3E-05	-205.864
4596	0.5	Extremo 2A	-7.7E-05	-17.247	-1.2E-05	-20.6319	1.9E-05	-193.335
4596	1	Extremo 2A	-7.7E-05	-1.622	-1.2E-05	-20.6319	2.5E-05	-188.618
4597	0	Extremo 1A	-8E-06	-55.415	8E-06	-23.9635	5.7E-06	-198.555
4597	0.5	Extremo 1A	-8E-06	-39.79	8E-06	-23.9635	1.7E-06	-174.754
4597	1	Extremo 1A	-8E-06	-24.165	8E-06	-23.9635	-2.2E-06	-158.766
4597	0	Extremo 2A	-7.3E-05	-55.415	5.9E-05	-24.0247	4.7E-05	-198.547

4597	0.5	Extremo 2A	-7.3E-05	-39.79	5.9E-05	-24.0247	1.8E-05	-174.745
4597	1	Extremo 2A	-7.3E-05	-24.165	5.9E-05	-24.0247	-1.2E-05	-158.757
4598	0	Extremo 1A	-5.7E-06	-75.562	1.2E-05	-28.3289	7.2E-06	-169.025
4598	0.5	Extremo 1A	-5.7E-06	-59.937	1.2E-05	-28.3289	1.2E-06	-135.15
4598	1	Extremo 1A	-5.7E-06	-44.312	1.2E-05	-28.3289	-4.7E-06	-109.088
4598	0	Extremo 2A	-5.5E-05	-75.56	0.00011	-28.436	6.6E-05	-169.02
4598	0.5	Extremo 2A	-5.5E-05	-59.935	0.00011	-28.436	1.4E-05	-135.147
4598	1	Extremo 2A	-5.5E-05	-44.31	0.00011	-28.436	-3.9E-05	-109.086
4599	0	Extremo 1A	-4.6E-06	26.486	-1.4E-05	-5.8734	-7.2E-06	-123.206
4599	0.5	Extremo 1A	-4.6E-06	42.111	-1.4E-05	-5.8734	-4E-07	-140.355
4599	1	Extremo 1A	-4.6E-06	57.736	-1.4E-05	-5.8734	6.4E-06	-165.317
4599	0	Extremo 2A	-3E-05	26.486	-0.00011	-5.8942	-6.2E-05	-123.208
4599	0.5	Extremo 2A	-3E-05	42.111	-0.00011	-5.8942	-7.5E-06	-140.357
4599	1	Extremo 2A	-3E-05	57.736	-0.00011	-5.8942	4.7E-05	-165.319
4600	0	Extremo 1A	-7.7E-06	8.556	-1.4E-05	-8.3168	-6.3E-06	-169.674
4600	0.5	Extremo 1A	-7.7E-06	24.181	-1.4E-05	-8.3168	7.4E-07	-177.858
4600	1	Extremo 1A	-7.7E-06	39.806	-1.4E-05	-8.3168	7.8E-06	-193.855
4600	0	Extremo 2A	-5.7E-05	8.555	-0.00013	-8.3499	-6.3E-05	-169.676
4600	0.5	Extremo 2A	-5.7E-05	24.18	-0.00013	-8.3499	2.3E-06	-177.86
4600	1	Extremo 2A	-5.7E-05	39.805	-0.00013	-8.3499	6.7E-05	-193.856
4601	0	Extremo 1A	-1E-05	-11.866	-8.8E-06	-10.373	-2.3E-06	-199.335
4601	0.5	Extremo 1A	-1E-05	3.759	-8.8E-06	-10.373	2.1E-06	-197.309
4601	1	Extremo 1A	-1E-05	19.384	-8.8E-06	-10.373	6.5E-06	-203.095
4601	0	Extremo 2A	-8.4E-05	-11.867	-9.8E-05	-10.4131	-3.3E-05	-199.336
4601	0.5	Extremo 2A	-8.4E-05	3.758	-9.8E-05	-10.4131	1.6E-05	-197.309
4601	1	Extremo 2A	-8.4E-05	19.383	-9.8E-05	-10.4131	6.5E-05	-203.094
4602	0	Extremo 1A	-1.1E-05	-34.152	5.5E-07	-12.2601	2.9E-06	-210.379
4602	0.5	Extremo 1A	-1.1E-05	-18.527	5.5E-07	-12.2601	2.7E-06	-197.209
4602	1	Extremo 1A	-1.1E-05	-2.902	5.5E-07	-12.2601	2.4E-06	-191.851
4602	0	Extremo 2A	-9.9E-05	-34.154	-1.9E-05	-12.3071	1.5E-05	-210.378
4602	0.5	Extremo 2A	-9.9E-05	-18.529	-1.9E-05	-12.3071	2.4E-05	-197.207
4602	1	Extremo 2A	-9.9E-05	-2.904	-1.9E-05	-12.3071	3.4E-05	-191.849
4603	0	Extremo 1A	-1E-05	-56.371	1E-05	-13.8627	7.3E-06	-200.71
4603	0.5	Extremo 1A	-1E-05	-40.746	1E-05	-13.8627	2.2E-06	-176.43
4603	1	Extremo 1A	-1E-05	-25.121	1E-05	-13.8627	-2.8E-06	-159.964
4603	0	Extremo 2A	-9.4E-05	-56.373	7.3E-05	-13.9211	6E-05	-200.708
4603	0.5	Extremo 2A	-9.4E-05	-40.748	7.3E-05	-13.9211	2.3E-05	-176.428
4603	1	Extremo 2A	-9.4E-05	-25.123	7.3E-05	-13.9211	-1.4E-05	-159.96
4604	0	Extremo 1A	-7.4E-06	-76.73	1.5E-05	-16.7272	9.2E-06	-169.409
4604	0.5	Extremo 1A	-7.4E-06	-61.105	1.5E-05	-16.7272	1.6E-06	-134.95
4604	1	Extremo 1A	-7.4E-06	-45.48	1.5E-05	-16.7272	-6E-06	-108.304
4604	0	Extremo 2A	-7.1E-05	-76.73	0.00013	-16.8318	8.5E-05	-169.408
4604	0.5	Extremo 2A	-7.1E-05	-61.105	0.00013	-16.8318	1.8E-05	-134.949
4604	1	Extremo 2A	-7.1E-05	-45.48	0.00013	-16.8318	-4.9E-05	-108.302
4605	0	Extremo 1A	-5.7E-06	26.585	-1.7E-05	-2.1018	-9.1E-06	-123.981
4605	0.5	Extremo 1A	-5.7E-06	42.21	-1.7E-05	-2.1018	-5.6E-07	-141.18
4605	1	Extremo 1A	-5.7E-06	57.835	-1.7E-05	-2.1018	8E-06	-166.191
4605	0	Extremo 2A	-3.7E-05	26.585	-0.00014	-2.1204	-7.9E-05	-123.988
4605	0.5	Extremo 2A	-3.7E-05	42.21	-0.00014	-2.1204	-1E-05	-141.187
4605	1	Extremo 2A	-3.7E-05	57.835	-0.00014	-2.1204	5.9E-05	-166.198
4606	0	Extremo 1A	-9.7E-06	7.901	-1.8E-05	-2.9308	-8.1E-06	-171.603
4606	0.5	Extremo 1A	-9.7E-06	23.526	-1.8E-05	-2.9308	8.9E-07	-179.459
4606	1	Extremo 1A	-9.7E-06	39.151	-1.8E-05	-2.9308	9.9E-06	-195.129
4606	0	Extremo 2A	-7.2E-05	7.898	-0.00017	-2.9627	-8.2E-05	-171.614
4606	0.5	Extremo 2A	-7.2E-05	23.523	-0.00017	-2.9627	2.2E-06	-179.469
4606	1	Extremo 2A	-7.2E-05	39.148	-0.00017	-2.9627	8.6E-05	-195.137
4607	0	Extremo 1A	-1.3E-05	-12.778	-1.1E-05	-3.5488	-3.1E-06	-201.589
4607	0.5	Extremo 1A	-1.3E-05	2.847	-1.1E-05	-3.5488	2.6E-06	-199.106
4607	1	Extremo 1A	-1.3E-05	18.472	-1.1E-05	-3.5488	8.3E-06	-204.435
4607	0	Extremo 2A	-0.00011	-12.783	-0.00013	-3.5884	-4.4E-05	-201.599
4607	0.5	Extremo 2A	-0.00011	2.842	-0.00013	-3.5884	2E-05	-199.114
4607	1	Extremo 2A	-0.00011	18.467	-0.00013	-3.5884	8.4E-05	-204.442
4608	0	Extremo 1A	-1.4E-05	-34.658	4.1E-07	-4.0651	3.6E-06	-212.072
4608	0.5	Extremo 1A	-1.4E-05	-19.033	4.1E-07	-4.0651	3.4E-06	-198.65
4608	1	Extremo 1A	-1.4E-05	-3.408	4.1E-07	-4.0651	3.2E-06	-193.039
4608	0	Extremo 2A	-0.00013	-34.662	-2.8E-05	-4.1116	1.7E-05	-212.08
4608	0.5	Extremo 2A	-0.00013	-19.037	-2.8E-05	-4.1116	3.1E-05	-198.655
4608	1	Extremo 2A	-0.00013	-3.412	-2.8E-05	-4.1116	4.5E-05	-193.043
4609	0	Extremo 1A	-1.3E-05	-56.65	1.3E-05	-4.5268	9.2E-06	-201.622
4609	0.5	Extremo 1A	-1.3E-05	-41.025	1.3E-05	-4.5268	2.9E-06	-177.203
4609	1	Extremo 1A	-1.3E-05	-25.4	1.3E-05	-4.5268	-3.4E-06	-160.597
4609	0	Extremo 2A	-0.00012	-56.653	9.1E-05	-4.5844	7.6E-05	-201.626
4609	0.5	Extremo 2A	-0.00012	-41.028	9.1E-05	-4.5844	3E-05	-177.206
4609	1	Extremo 2A	-0.00012	-25.403	9.1E-05	-4.5844	-1.6E-05	-160.598
4610	0	Extremo 1A	-9.5E-06	-77.072	1.9E-05	-5.4484	1.2E-05	-169.69
4610	0.5	Extremo 1A	-9.5E-06	-61.447	1.9E-05	-5.4484	2.1E-06	-135.06
4610	1	Extremo 1A	-9.5E-06	-45.822	1.9E-05	-5.4484	-7.6E-06	-108.243
4610	0	Extremo 2A	-9.1E-05	-77.073	0.00017	-5.5523	0.00011	-169.691
4610	0.5	Extremo 2A	-9.1E-05	-61.448	0.00017	-5.5523	2.4E-05	-135.061
4610	1	Extremo 2A	-9.1E-05	-45.823	0.00017	-5.5523	-6.2E-05	-108.243
4611	0	Extremo 1A	-7.1E-06	26.584	-2.2E-05	2.0995	-1.2E-05	-123.975
4611	0.5	Extremo 1A	-7.1E-06	42.209	-2.2E-05	2.0995	-7.8E-07	-141.174
4611	1	Extremo 1A	-7.1E-06	57.834	-2.2E-05	2.0995	1E-05	-166.184
4611	0	Extremo 2A	-4.5E-05	26.584	-0.00017	2.0875	-0.0001	-123.99
4611	0.5	Extremo 2A	-4.5E-05	42.209	-0.00017	2.0875	-1.4E-05	-141.188
4611	1	Extremo 2A	-4.5E-05	57.834	-0.00017	2.0875	7.3E-05	-166.198
4612	0	Extremo 1A	-1.2E-05	7.903	-2.3E-05	2.958	-1.1E-05	-171.59
4612	0.5	Extremo 1A	-1.2E-05	23.528	-2.3E-05	2.958	1.1E-06	-179.448
4612	1	Extremo 1A	-1.2E-05	39.153	-2.3E-05	2.958	1.3E-05	-195.118
4612	0	Extremo 2A	-8.9E-05	7.896	-0.00022	2.9314	-0.00011	-171.614
4612	0.5	Extremo 2A	-8.9E-05	23.521	-0.00022	2.9314	1.8E-06	-179.469
4612	1	Extremo 2A	-8.9E-05	39.146	-0.00022	2.9314	0.00011	-195.136
4613	0	Extremo 1A	-1.7E-05	-12.776	-1.5E-05	3.5969	-4.2E-06	-201.573
4613	0.5	Extremo 1A	-1.7E-05	2.849	-1.5E-05	3.5969	3.3E-06	-199.092
4613	1	Extremo 1A	-1.7E-05	18.474	-1.5E-05	3.5969	1.1E-05	-204.422
4613	0	Extremo 2A	-0.00013	-12.785	-0.00017	3.5602	-6E-05	-201.597
4613	0.5	Extremo 2A	-0.00013	2.84	-0.00017	3.5602	2.5E-05	-199.111
4613	1	Extremo 2A	-0.00013	18.465	-0.00017	3.5602	0.00011	-204.438
4614	0	Extremo 1A	-1.8E-05	-34.657	1.3E-07	4.1361	4.4E-06	-212.058
4614	0.5	Extremo 1A	-1.8E-05	-19.032	1.3E-07	4.1361	4.4E-06	-198.636
4614	1	Extremo 1A	-1.8E-05	-3.407	1.3E-07	4.1361	4.3E-06	-193.026
4614	0	Extremo 2A	-0.00016	-34.665	-4.2E-05	4.0905	1.9E-05	-212.076
4614	0.5	Extremo 2A	-0.00016	-19.04	-4.2E-05	4.0905	4E-05	-198.65
4614	1	Extremo 2A	-0.00016	-3.415	-4.2E-05	4.0905	6.1E-05	-193.036
4615	0	Extremo 1A	-1.7E-05	-56.649	1.6E-05	4.6373	1.2E-05	-201.61
4615	0.5	Extremo 1A	-1.7E-05	-41.024	1.6E-05	4.6373	3.8E-06	-177.192
4615	1	Extremo 1A	-1.7E-05	-25.399	1.6E-05	4.6373	-4.2E-06	-160.586
4615	0	Extremo 2A	-0.00016	-56.654	0.00011	4.5794	9.6E-05	-201.621
4615	0.5	Extremo 2A	-0.00016	-41.029	0.00011	4.5794	3.9E-05	-177.2
4615	1	Extremo 2A	-0.00016	-25.404	0.00011	4.5794	-1.7E-05	-160.591
4616	0	Extremo 1A	-1.2E-05	-77.07	2.5E-05	5.709	1.5E-05	-169.683
4616	0.5	Extremo 1A	-1.2E-05	-61.445	2.5E-05	5.709	2.7E-06	-135.055
4616	1	Extremo 1A	-1.2E-05	-45.82	2.5E-05	5.709	-9.6E-06	-108.239
4616	0	Extremo 2A	-0.00012	-77.072	0.00022	5.6045	0.00014	-169.687
4616	0.5	Extremo 2A	-0.00012	-61.447	0.00022	5.6045	3.1E-05	-135.057
4616	1	Extremo 2A	-0.00012	-45.822	0.00022	5.6045	-7.8E-05	-108.24
4617	0	Extremo 1A	-8.9E-06	26.483	-2.8E-05	5.8602	-1.5E-05	-123.19
4617	0.5	Extremo 1A	-8.9E-06	42.108	-2.8E-05	5.8602	-1.1E-06	-140.337
4617	1	Extremo 1A	-8.9E-06	57.733	-2.8E-05	5.8602	1.3E-05	-165.297
4617	0	Extremo 2A	-5.5E-05	26.483	-0.00022	5.8612	-0.00013	-123.213
4617	0.5	Extremo 2A	-5.5E-05	42.108	-0.00022	5.8612	-1.9E-05	-140.361
4617	1	Extremo 2A	-5.5E-05	57.733	-0.00022	5.8612	9.1E-05	-165.321
4618	0	Extremo 1A	-1.5E-05	8.562	-3E-05	8.3322	-1.4E-05	-169.634
4618	0.5	Extremo 1A	-1.5E-05	24.187	-3E-05	8.3322	1.3E-06	-177.822
4618	1	Extremo 1A	-1.5E-05	39.812	-3E-05	8.3322	1.6E-05	-193.821
4618	0	Extremo 2A	-0.00011	8.55	-0.00028	8.3173	-0.00014	-169.677
4618	0.5	Extremo 2A	-0.00011	24.175	-0.00028	8.3173	9.8E-07	-177.858
4618	1	Extremo 2A	-0.00011	39.8	-0.00028	8.3173	0.00014	-193.852
4619	0	Extremo 1A	-2.1E-05	-11.857	-2E-05	10.4139	-5.6E-06	-199.284
4619	0.5	Extremo 1A	-2.1E-05	3.768	-2E-05	10.4139	4.2E-06	-197.262
4619	1	Extremo 1A	-2.1E-05	19.393	-2E-05	10.4139	1.4E-05	-203.052
4619	0	Extremo 2A	-0.00017	-11.874	-0.00022	10.3839	-8E-05	-199.329
4619	0.5	Extremo 2A	-0.00017	3.751	-0.00022	10.3839	3.1E-05	-197.298
4619	1	Extremo 2A	-0.00017	19.376	-0.00022	10.3839	0.00014	-203.08
4620	0	Extremo 1A	-2.4E-05	-34.151	-3.6E-07	12.3319	5.4E-06	-210.33
4620	0.5	Extremo 1A	-2.4E-05	-18.526	-3.6E-07	12.3319	5.6E-06	-197.161
4620	1	Extremo 1A	-2.4E-05	-2.901	-3.6E-07	12.3319	5.8E-06	-191.804
4620	0	Extremo 2A	-0.00021	-34.164	-6.1E-05	12.2875	2.1E-05	-210.364
4620	0.5	Extremo 2A	-0.00021	-18.539	-6.1E-05	12.2875	5.1E-05	-197.188
4620	1	Extremo 2A	-0.00021	-2.914	-6.1E-05	12.2875	8.2E-05	-191.825
4621	0	Extremo 1A	-2.2E-05	-56.371	2E-05	13.9808	1.5E-05	-200.672
4621	0.5	Extremo 1A	-2.2E-05	-40.746	2E-05	13.9808	4.9E-06	-176.393
4621	1	Extremo 1A	-2.2E-05	-25.121	2E-05	13.9808	-5.1E-06	-159.926
4621	0	Extremo 2A	-0.0002	-56.379	0.00014	13.9208	0.00012	-200.691

4621	0.5	Extremo 2A	-0.0002	-40.754	0.00014	13.9208	5.1E-05	-176.408
4621	1	Extremo 2A	-0.0002	-25.129	0.00014	13.9208	-1.9E-05	-159.937
4622	0	Extremo 1A	-1.6E-05	-76.723	3.2E-05	16.9967	1.9E-05	-169.388
4622	0.5	Extremo 1A	-1.6E-05	-61.098	3.2E-05	16.9967	3.6E-06	-134.933
4622	1	Extremo 1A	-1.6E-05	-45.473	3.2E-05	16.9967	-1.2E-05	-108.29
4622	0	Extremo 2A	-0.00015	-76.728	0.00028	16.8898	0.00018	-169.395
4622	0.5	Extremo 2A	-0.00015	-61.103	0.00028	16.8898	4.1E-05	-134.937
4622	1	Extremo 2A	-0.00015	-45.478	0.00028	16.8898	-9.9E-05	-108.291
4623	0	Extremo 1A	-1.1E-05	25.698	-3.5E-05	8.3387	-1.9E-05	-122.429
4623	0.5	Extremo 1A	-1.1E-05	41.323	-3.5E-05	8.3387	-1.5E-06	-139.184
4623	1	Extremo 1A	-1.1E-05	56.948	-3.5E-05	8.3387	1.6E-05	-163.752
4623	0	Extremo 2A	-6.6E-05	25.703	-0.00028	8.3625	-0.00017	-122.46
4623	0.5	Extremo 2A	-6.6E-05	41.328	-0.00028	8.3625	-2.6E-05	-139.217
4623	1	Extremo 2A	-6.6E-05	56.953	-0.00028	8.3625	0.00011	-163.788
4624	0	Extremo 1A	-1.9E-05	9.669	-3.8E-05	11.8411	-1.8E-05	-165.723
4624	0.5	Extremo 1A	-1.9E-05	25.294	-3.8E-05	11.8411	1.5E-06	-174.463
4624	1	Extremo 1A	-1.9E-05	40.919	-3.8E-05	11.8411	2.1E-05	-191.016
4624	0	Extremo 2A	-0.00014	9.649	-0.00036	11.8505	-0.00018	-165.793
4624	0.5	Extremo 2A	-0.00014	25.274	-0.00036	11.8505	-5.3E-07	-174.523
4624	1	Extremo 2A	-0.00014	40.899	-0.00036	11.8505	0.00018	-191.067
4625	0	Extremo 1A	-2.7E-05	-9.948	-2.6E-05	15.9436	-7.6E-06	-193.706
4625	0.5	Extremo 1A	-2.7E-05	5.677	-2.6E-05	15.9436	5.2E-06	-192.638
4625	1	Extremo 1A	-2.7E-05	21.302	-2.6E-05	15.9436	1.8E-05	-199.383
4625	0	Extremo 2A	-0.00021	-9.978	-0.00029	15.9287	-0.00011	-193.787
4625	0.5	Extremo 2A	-0.00021	5.647	-0.00029	15.9287	3.8E-05	-192.704
4625	1	Extremo 2A	-0.00021	21.272	-0.00029	15.9287	0.00018	-199.434
4626	0	Extremo 1A	-3E-05	-32.87	-1.2E-06	20.6605	6.6E-06	-205.772
4626	0.5	Extremo 1A	-3E-05	-17.245	-1.2E-06	20.6605	7.2E-06	-193.243
4626	1	Extremo 1A	-3E-05	-1.62	-1.2E-06	20.6605	7.8E-06	-188.527
4626	0	Extremo 2A	-0.00026	-32.892	-8.8E-05	20.6171	2.2E-05	-205.835
4626	0.5	Extremo 2A	-0.00026	-17.267	-8.8E-05	20.6171	6.6E-05	-193.295
4626	1	Extremo 2A	-0.00026	-1.642	-8.8E-05	20.6171	0.00011	-188.567
4627	0	Extremo 1A	-2.8E-05	-55.413	2.5E-05	24.1035	1.9E-05	-198.478
4627	0.5	Extremo 1A	-2.8E-05	-39.788	2.5E-05	24.1035	6.3E-06	-174.678
4627	1	Extremo 1A	-2.8E-05	-24.163	2.5E-05	24.1035	-6.2E-06	-158.69
4627	0	Extremo 2A	-0.00026	-55.428	0.00017	24.0371	0.00015	-198.511
4627	0.5	Extremo 2A	-0.00026	-39.803	0.00017	24.0371	6.7E-05	-174.704
4627	1	Extremo 2A	-0.00026	-24.178	0.00017	24.0371	-1.9E-05	-158.709
4628	0	Extremo 1A	-2E-05	-75.541	4E-05	28.6192	2.5E-05	-168.985
4628	0.5	Extremo 1A	-2E-05	-59.916	4E-05	28.6192	4.7E-06	-135.121
4628	1	Extremo 1A	-2E-05	-44.291	4E-05	28.6192	-1.6E-05	-109.069
4628	0	Extremo 2A	-0.0002	-75.554	0.00036	28.5078	0.00023	-168.995
4628	0.5	Extremo 2A	-0.0002	-59.929	0.00036	28.5078	5.5E-05	-135.124
4628	1	Extremo 2A	-0.0002	-44.304	0.00036	28.5078	-0.00013	-109.066
4629	0	Extremo 1A	-1.4E-05	22.738	-4.4E-05	9.3212	-2.4E-05	-124.716
4629	0.5	Extremo 1A	-1.4E-05	38.363	-4.4E-05	9.3212	-2.1E-06	-139.991
4629	1	Extremo 1A	-1.4E-05	53.988	-4.4E-05	9.3212	2E-05	-163.079
4629	0	Extremo 2A	-7.9E-05	22.759	-0.00035	9.378	-0.00021	-124.737
4629	0.5	Extremo 2A	-7.9E-05	38.384	-0.00035	9.378	-3.6E-05	-140.023
4629	1	Extremo 2A	-7.9E-05	54.009	-0.00035	9.378	0.00014	-163.121
4630	0	Extremo 1A	-2.4E-05	9.592	-4.9E-05	10.8631	-2.3E-05	-161.298
4630	0.5	Extremo 1A	-2.4E-05	25.217	-4.9E-05	10.8631	1.7E-06	-170
4630	1	Extremo 1A	-2.4E-05	40.842	-4.9E-05	10.8631	2.6E-05	-186.515
4630	0	Extremo 2A	-0.00017	9.571	-0.00046	10.9233	-0.00023	-161.397
4630	0.5	Extremo 2A	-0.00017	25.196	-0.00046	10.9233	-3.1E-06	-170.089
4630	1	Extremo 2A	-0.00017	40.821	-0.00046	10.9233	0.00023	-186.593
4631	0	Extremo 1A	-3.4E-05	-8.084	-3.4E-05	17.9968	-1E-05	-182.457
4631	0.5	Extremo 1A	-3.4E-05	7.541	-3.4E-05	17.9968	6.6E-06	-182.321
4631	1	Extremo 1A	-3.4E-05	23.166	-3.4E-05	17.9968	2.3E-05	-189.998
4631	0	Extremo 2A	-0.00027	-8.126	-0.00039	18.0171	-0.00015	-182.605
4631	0.5	Extremo 2A	-0.00027	7.499	-0.00039	18.0171	4.8E-05	-182.448
4631	1	Extremo 2A	-0.00027	23.124	-0.00039	18.0171	0.00024	-190.104
4632	0	Extremo 1A	-3.8E-05	-29.169	-2.4E-06	29.9228	8E-06	-194.522
4632	0.5	Extremo 1A	-3.8E-05	-13.544	-2.4E-06	29.9228	9.2E-06	-183.844
4632	1	Extremo 1A	-3.8E-05	2.081	-2.4E-06	29.9228	1E-05	-180.978
4632	0	Extremo 2A	-0.00034	-29.214	-0.00013	29.8755	2.2E-05	-194.65
4632	0.5	Extremo 2A	-0.00034	-13.589	-0.00013	29.8755	8.5E-05	-183.95
4632	1	Extremo 2A	-0.00034	2.036	-0.00013	29.8755	0.00015	-181.062
4633	0	Extremo 1A	-3.6E-05	-51.578	3.1E-05	36.5887	2.4E-05	-194.318
4633	0.5	Extremo 1A	-3.6E-05	-35.953	3.1E-05	36.5887	8.2E-06	-172.435
4633	1	Extremo 1A	-3.6E-05	-20.328	3.1E-05	36.5887	-7.4E-06	-158.365
4633	0	Extremo 2A	-0.00033	-51.615	0.00021	36.5028	0.00019	-194.375
4633	0.5	Extremo 2A	-0.00033	-35.99	0.00021	36.5028	8.8E-05	-172.474
4633	1	Extremo 2A	-0.00033	-20.365	0.00021	36.5028	-1.8E-05	-158.385
4634	0	Extremo 1A	-2.6E-05	-72.121	5.2E-05	40.1679	3.2E-05	-169.72
4634	0.5	Extremo 1A	-2.6E-05	-56.496	5.2E-05	40.1679	6.2E-06	-137.566
4634	1	Extremo 1A	-2.6E-05	-40.871	5.2E-05	40.1679	-2E-05	-113.224
4634	0	Extremo 2A	-0.00026	-72.154	0.00046	40.0526	0.0003	-169.725
4634	0.5	Extremo 2A	-0.00026	-56.529	0.00046	40.0526	7.3E-05	-137.555
4634	1	Extremo 2A	-0.00026	-40.904	0.00046	40.0526	-0.00016	-113.197
4635	0	Extremo 1A	-1.7E-05	17.884	-5.6E-05	12.1594	-3.1E-05	-137.645
4635	0.5	Extremo 1A	-1.7E-05	33.509	-5.6E-05	12.1594	-2.9E-06	-150.493
4635	1	Extremo 1A	-1.7E-05	49.134	-5.6E-05	12.1594	2.5E-05	-171.154
4635	0	Extremo 2A	-9.3E-05	17.932	-0.00044	12.2407	-0.00027	-137.597
4635	0.5	Extremo 2A	-9.3E-05	33.557	-0.00044	12.2407	-4.9E-05	-150.469
4635	1	Extremo 2A	-9.3E-05	49.182	-0.00044	12.2407	0.00017	-171.153
4636	0	Extremo 1A	-3E-05	-0.489	-6.3E-05	-0.4841	-3E-05	-165.377
4636	0.5	Extremo 1A	-3E-05	15.136	-6.3E-05	-0.4841	2E-06	-169.039
4636	1	Extremo 1A	-3E-05	30.761	-6.3E-05	-0.4841	3.3E-05	-180.513
4636	0	Extremo 2A	-0.00021	-0.455	-0.0006	-0.3139	-0.00031	-165.458
4636	0.5	Extremo 2A	-0.00021	15.17	-0.0006	-0.3139	-7.1E-06	-169.137
4636	1	Extremo 2A	-0.00021	30.795	-0.0006	-0.3139	0.00029	-180.628
4637	0	Extremo 1A	-4.3E-05	-13.418	-4.4E-05	11.6749	-1.4E-05	-161.605
4637	0.5	Extremo 1A	-4.3E-05	2.207	-4.4E-05	11.6749	8.3E-06	-158.802
4637	1	Extremo 1A	-4.3E-05	17.832	-4.4E-05	11.6749	3E-05	-163.812
4637	0	Extremo 2A	-0.00034	-13.434	-0.00051	11.7784	-0.0002	-161.874
4637	0.5	Extremo 2A	-0.00034	2.191	-0.00051	11.7784	5.9E-05	-159.063
4637	1	Extremo 2A	-0.00034	17.816	-0.00051	11.7784	0.00031	-164.065
4638	0	Extremo 1A	-4.9E-05	-15.453	-4.4E-06	42.4031	9.6E-06	-164.703
4638	0.5	Extremo 1A	-4.9E-05	0.172	-4.4E-06	42.4031	1.2E-05	-160.883
4638	1	Extremo 1A	-4.9E-05	15.797	-4.4E-06	42.4031	1.4E-05	-164.875
4638	0	Extremo 2A	-0.00043	-15.578	-0.00018	42.3347	1.9E-05	-165
4638	0.5	Extremo 2A	-0.00043	0.047	-0.00018	42.3347	0.00011	-161.117
4638	1	Extremo 2A	-0.00043	15.672	-0.00018	42.3347	0.0002	-165.047
4639	0	Extremo 1A	-4.6E-05	-34.523	3.9E-05	55.5302	3E-05	-186.602
4639	0.5	Extremo 1A	-4.6E-05	-18.898	3.9E-05	55.5302	1.1E-05	-173.247
4639	1	Extremo 1A	-4.6E-05	-3.273	3.9E-05	55.5302	-8.9E-06	-167.704
4639	0	Extremo 2A	-0.00043	-34.658	0.00026	55.3895	0.00025	-186.702
4639	0.5	Extremo 2A	-0.00043	-19.033	0.00026	55.3895	0.00012	-173.279
4639	1	Extremo 2A	-0.00043	-3.408	0.00026	55.3895	-1.5E-05	-167.668
4640	0	Extremo 1A	-3.4E-05	-65.488	6.6E-05	47.7609	4.1E-05	-178.164
4640	0.5	Extremo 1A	-3.4E-05	-49.863	6.6E-05	47.7609	8.1E-06	-149.326
4640	1	Extremo 1A	-3.4E-05	-34.238	6.6E-05	47.7609	-2.5E-05	-128.301
4640	0	Extremo 2A	-0.00033	-65.558	0.00059	47.6646	0.00039	-178.121
4640	0.5	Extremo 2A	-0.00033	-49.933	0.00059	47.6646	9.6E-05	-149.248
4640	1	Extremo 2A	-0.00033	-34.308	0.00059	47.6646	-0.0002	-128.188
4641	0	Extremo 1A	-2.1E-05	37.451	-7.1E-05	30.9391	-3.9E-05	-168.69
4641	0.5	Extremo 1A	-2.1E-05	53.076	-7.1E-05	30.9391	-4E-06	-191.322
4641	1	Extremo 1A	-2.1E-05	68.701	-7.1E-05	30.9391	3.1E-05	-221.766
4641	0	Extremo 2A	-0.00011	37.391	-0.00055	30.9581	-0.00034	-168.472
4641	0.5	Extremo 2A	-0.00011	53.016	-0.00055	30.9581	-6.6E-05	-191.074
4641	1	Extremo 2A	-0.00011	68.641	-0.00055	30.9581	0.00021	-221.488
4642	0	Extremo 1A	-3.8E-05	-62.097	-8.1E-05	-34.3902	-3.8E-05	-215.423
4642	0.5	Extremo 1A	-3.8E-05	-46.472	-8.1E-05	-34.3902	2.2E-06	-188.281
4642	1	Extremo 1A	-3.8E-05	-30.847	-8.1E-05	-34.3902	4.3E-05	-168.951
4642	0	Extremo 2A	-0.00026	-61.723	-0.00077	-33.9825	-0.0004	-215.231
4642	0.5	Extremo 2A	-0.00026	-46.098	-0.00077	-33.9825	-1.3E-05	-188.276
4642	1	Extremo 2A	-0.00026	-30.473	-0.00077	-33.9825	0.00037	-169.133
4643	0	Extremo 1A	-5.4E-05	-50.983	-5.8E-05	-9.5448	-1.8E-05	-126.408
4643	0.5	Extremo 1A	-5.4E-05	-35.358	-5.8E-05	-9.5448	1E-05	-104.823
4643	1	Extremo 1A	-5.4E-05	-19.733	-5.8E-05	-9.5448	3.9E-05	-91.0501
4643	0	Extremo 2A	-0.00043	-50.795	-0.00067	-9.2735	-0.00026	-126.879
4643	0.5	Extremo 2A	-0.00043	-35.17	-0.00067	-9.2735	7.3E-05	-105.388
4643	1	Extremo 2A	-0.00043	-19.545	-0.00067	-9.2735	0.00041	-91.7089
4644	0	Extremo 1A	-6.2E-05	32.359	-7.4E-06	60.1568	1.1E-05	-85.7795
4644	0.5	Extremo 1A	-6.2E-05	47.984	-7.4E-06	60.1568	1.5E-05	-105.865
4644	1	Extremo 1A	-6.2E-05	63.609	-7.4E-06	60.1568	1.9E-05	-133.764
4644	0	Extremo 2A	-0.00055	31.962	-0.00026	60.0394	1.2E-05	-86.5189
4644	0.5	Extremo 2A	-0.00055	47.587	-0.00026	60.0394	0.00014	-106.406
4644	1	Extremo 2A	-0.00055	63.212	-0.00026	60.0394	0.00027	-134.106
4645	0	Extremo 1A	-5.9E-05	40.285	4.9E-05	89.2447	3.8E-05	-167.343
4645	0.5	Extremo 1A	-5.9E-05	55.91	4.9E-05	89.2447	1.4E-05	-191.391
4645	1	Extremo 1A	-5.9E-05	71.535	4.9E-05	89.2447	-1.1E-05	-223.252
4645	0	Extremo 2A	-0.00056	39.728	0.00032	88.9678	0.00031	-167.548

4645	0.5	Extremo 2A	-0.00056	55.353	0.00032	88.9678	0.00015	-191.319
4645	1	Extremo 2A	-0.00056	70.978	0.00032	88.9678	-7.3E-06	-222.901
4646	0	Extremo 1A	-4.3E-05	-73.619	8.5E-05	35.6484	5.3E-05	-223.938
4646	0.5	Extremo 1A	-4.3E-05	-57.994	8.5E-05	35.6484	1.1E-05	-191.035
4646	1	Extremo 1A	-4.3E-05	-42.369	8.5E-05	35.6484	-3.2E-05	-165.944
4646	0	Extremo 2A	-0.00043	-73.642	0.00076	35.683	0.00051	-223.636
4646	0.5	Extremo 2A	-0.00043	-58.017	0.00076	35.683	0.00013	-190.721
4646	1	Extremo 2A	-0.00043	-42.392	0.00076	35.683	-0.00025	-165.619
4647	0	Extremo 1A	-2.6E-05	236.189	-9E-05	82.9779	-5E-05	-176.587
4647	0.5	Extremo 1A	-2.6E-05	251.814	-9E-05	82.9779	-5.5E-06	-298.588
4647	1	Extremo 1A	-2.6E-05	267.439	-9E-05	82.9779	3.9E-05	-428.401
4647	0	Extremo 2A	-0.00013	235.025	-0.0007	82.7516	-0.00044	-176.327
4647	0.5	Extremo 2A	-0.00013	250.65	-0.0007	82.7516	-9E-05	-297.746
4647	1	Extremo 2A	-0.00013	266.275	-0.0007	82.7516	0.00026	-426.977
4648	0	Extremo 1A	-4.8E-05	-337.972	-0.0001	-95.6122	-5E-05	-428.295
4648	0.5	Extremo 1A	-4.8E-05	-322.347	-0.0001	-95.6122	2.4E-06	-263.215
4648	1	Extremo 1A	-4.8E-05	-306.722	-0.0001	-95.6122	5.4E-05	-105.948
4648	0	Extremo 2A	-0.00032	-336.067	-0.00099	-94.8127	-0.00052	-426.925
4648	0.5	Extremo 2A	-0.00032	-320.442	-0.00099	-94.8127	-2.3E-05	-262.798
4648	1	Extremo 2A	-0.00032	-304.817	-0.00099	-94.8127	0.00047	-106.483
4649	0	Extremo 1A	-6.8E-05	-159.872	-7.6E-05	-35.7346	-2.5E-05	-69.5311
4649	0.5	Extremo 1A	-6.8E-05	-144.247	-7.6E-05	-35.7346	1.3E-05	6.4987
4649	1	Extremo 1A	-6.8E-05	-128.622	-7.6E-05	-35.7346	5.1E-05	74.716
4649	0	Extremo 2A	-0.00054	-159.083	-0.00089	-35.2641	-0.00035	-70.324
4649	0.5	Extremo 2A	-0.00054	-143.458	-0.00089	-35.2641	9E-05	5.3111
4649	1	Extremo 2A	-0.00054	-127.833	-0.00089	-35.2641	0.00053	73.1336
4650	0	Extremo 1A	-8E-05	149.729	-1.2E-05	68.0955	1.4E-05	87.6905
4650	0.5	Extremo 1A	-8E-05	165.354	-1.2E-05	68.0955	1.9E-05	8.92
4650	1	Extremo 1A	-8E-05	180.979	-1.2E-05	68.0955	2.5E-05	-77.663
4650	0	Extremo 2A	-0.0007	148.668	-0.00036	67.9876	-2.3E-07	85.9795
4650	0.5	Extremo 2A	-0.0007	164.293	-0.00036	67.9876	0.00018	7.739
4650	1	Extremo 2A	-0.0007	179.918	-0.00036	67.9876	0.00036	-78.314
4651	0	Extremo 1A	-7.5E-05	336.934	6.1E-05	134.434	4.9E-05	-87.7667
4651	0.5	Extremo 1A	-7.5E-05	352.559	6.1E-05	134.434	1.8E-05	-260.14
4651	1	Extremo 1A	-7.5E-05	368.184	6.1E-05	134.434	-1.3E-05	-440.326
4651	0	Extremo 2A	-0.00072	334.711	0.00038	133.959	0.00039	-88.4164
4651	0.5	Extremo 2A	-0.00072	350.336	0.00038	133.959	0.0002	-259.678
4651	1	Extremo 2A	-0.00072	365.961	0.00038	133.959	6.3E-06	-438.752
4652	0	Extremo 1A	-5.6E-05	-227.573	0.00011	-24.5087	6.8E-05	-413.799
4652	0.5	Extremo 1A	-5.6E-05	-211.948	0.00011	-24.5087	1.4E-05	-303.919
4652	1	Extremo 1A	-5.6E-05	-196.323	0.00011	-24.5087	-4E-05	-201.851
4652	0	Extremo 2A	-0.00056	-226.731	0.00097	-24.072	0.00065	-412.429
4652	0.5	Extremo 2A	-0.00056	-211.106	0.00097	-24.072	0.00017	-302.97
4652	1	Extremo 2A	-0.00056	-195.481	0.00097	-24.072	-0.00032	-201.323
4653	0	Extremo 1A	-3.2E-05	1038.63	-0.00011	-0.0691	-6.4E-05	64.8056
4653	0.5	Extremo 1A	-3.2E-05	1054.25	-0.00011	-0.0691	-7.5E-06	-458.414
4653	1	Extremo 1A	-3.2E-05	1069.88	-0.00011	-0.0691	4.9E-05	-989.446
4653	0	Extremo 2A	-0.00015	1033.01	-0.00087	0.2102	-0.00056	63.7259
4653	0.5	Extremo 2A	-0.00015	1048.63	-0.00087	0.2102	-0.00012	-456.685
4653	1	Extremo 2A	-0.00015	1064.26	-0.00087	0.2102	0.00031	-984.907
4654	0	Extremo 1A	-6E-05	-1207.43	-0.00013	-0.0908	-6.4E-05	-993.821
4654	0.5	Extremo 1A	-6E-05	-1191.81	-0.00013	-0.0908	2.6E-06	-394.012
4654	1	Extremo 1A	-6E-05	-1176.18	-0.00013	-0.0908	7E-05	197.985
4654	0	Extremo 2A	-0.00039	-1200.7	-0.00128	0.2322	-0.00068	-989.312
4654	0.5	Extremo 2A	-0.00039	-1185.07	-0.00128	0.2322	-3.7E-05	-392.869
4654	1	Extremo 2A	-0.00039	-1169.45	-0.00128	0.2322	0.0006	195.761
4655	0	Extremo 1A	-8.7E-05	-268.43	-9.9E-05	-0.0953	-3.3E-05	23.5766
4655	0.5	Extremo 1A	-8.7E-05	-252.805	-9.9E-05	-0.0953	1.6E-05	153.886
4655	1	Extremo 1A	-8.7E-05	-237.18	-9.9E-05	-0.0953	6.6E-05	276.382
4655	0	Extremo 2A	-0.00068	-267.038	-0.00118	0.2355	-0.00048	22.2637
4655	0.5	Extremo 2A	-0.00068	-251.413	-0.00118	0.2355	0.00011	151.877
4655	1	Extremo 2A	-0.00068	-235.788	-0.00118	0.2355	0.0007	273.677
4656	0	Extremo 1A	-0.0001	260.923	-1.8E-05	-0.0989	1.6E-05	293.578
4656	0.5	Extremo 1A	-0.0001	276.548	-1.8E-05	-0.0989	2.5E-05	159.21
4656	1	Extremo 1A	-0.0001	292.173	-1.8E-05	-0.0989	3.4E-05	17.0303
4656	0	Extremo 2A	-0.0009	259.238	-0.00051	0.2343	-2.2E-05	290.715
4656	0.5	Extremo 2A	-0.0009	274.863	-0.00051	0.2343	0.00023	157.189
4656	1	Extremo 2A	-0.0009	290.488	-0.00051	0.2343	0.00049	15.8515
4657	0	Extremo 1A	-9.7E-05	1221.89	7.6E-05	-0.1144	6.2E-05	229.606
4657	0.5	Extremo 1A	-9.7E-05	1237.51	7.6E-05	-0.1144	2.4E-05	-385.244
4657	1	Extremo 1A	-9.7E-05	1253.14	7.6E-05	-0.1144	-1.5E-05	-1007.91
4657	0	Extremo 2A	-0.00093	1214.69	0.00046	0.2236	0.00049	227.175
4657	0.5	Extremo 2A	-0.00093	1230.32	0.00046	0.2236	0.00026	-384.077
4657	1	Extremo 2A	-0.00093	1245.94	0.00046	0.2236	2.9E-05	-1003.14
4658	0	Extremo 1A	-7.2E-05	-953.261	0.00014	-0.2078	8.8E-05	-957.964
4658	0.5	Extremo 1A	-7.2E-05	-937.636	0.00014	-0.2078	1.8E-05	-485.24
4658	1	Extremo 1A	-7.2E-05	-922.011	0.00014	-0.2078	-5.1E-05	-20.3282
4658	0	Extremo 2A	-0.00073	-948.342	0.00124	0.1574	0.00085	-953.536
4658	0.5	Extremo 2A	-0.00073	-932.717	0.00124	0.1574	0.00022	-483.271
4658	1	Extremo 2A	-0.00073	-917.092	0.00124	0.1574	-0.0004	-20.819
4659	0	Extremo 1A	-3.9E-05	236.189	-0.00014	-83.1156	-8.2E-05	-176.589
4659	0.5	Extremo 1A	-3.9E-05	251.814	-0.00014	-83.1156	-1E-05	-298.59
4659	1	Extremo 1A	-3.9E-05	267.439	-0.00014	-83.1156	6.1E-05	-428.403
4659	0	Extremo 2A	-0.00016	235.025	-0.00109	-82.3314	-0.00071	-176.326
4659	0.5	Extremo 2A	-0.00016	250.65	-0.00109	-82.3314	-0.00017	-297.745
4659	1	Extremo 2A	-0.00016	266.275	-0.00109	-82.3314	0.00038	-426.976
4660	0	Extremo 1A	-7.4E-05	-337.972	-0.00017	95.431	-8.4E-05	-428.297
4660	0.5	Extremo 1A	-7.4E-05	-322.347	-0.00017	95.431	2.5E-06	-263.218
4660	1	Extremo 1A	-7.4E-05	-306.722	-0.00017	95.431	8.9E-05	-105.95
4660	0	Extremo 2A	-0.00047	-336.066	-0.00165	95.277	-0.00088	-426.924
4660	0.5	Extremo 2A	-0.00047	-320.441	-0.00165	95.277	-5.8E-05	-262.797
4660	1	Extremo 2A	-0.00047	-304.816	-0.00165	95.277	0.00077	-106.483
4661	0	Extremo 1A	-0.00011	-159.872	-0.00013	35.5442	-4.5E-05	-69.5339
4661	0.5	Extremo 1A	-0.00011	-144.247	-0.00013	35.5442	2.1E-05	6.4961
4661	1	Extremo 1A	-0.00011	-128.622	-0.00013	35.5442	8.6E-05	74.7135
4661	0	Extremo 2A	-0.00086	-159.082	-0.00156	35.7351	-0.00064	-70.3235
4661	0.5	Extremo 2A	-0.00086	-143.457	-0.00156	35.7351	0.00014	5.3111
4661	1	Extremo 2A	-0.00086	-127.832	-0.00156	35.7351	0.00091	73.1332
4662	0	Extremo 1A	-0.00013	149.728	-2.7E-05	-68.2935	1.8E-05	87.688
4662	0.5	Extremo 1A	-0.00013	165.353	-2.7E-05	-68.2935	3.2E-05	8.9177
4662	1	Extremo 1A	-0.00013	180.978	-2.7E-05	-68.2935	4.6E-05	-77.665
4662	0	Extremo 2A	-0.00115	148.669	-0.00071	-67.519	-5.7E-05	85.9791
4662	0.5	Extremo 2A	-0.00115	164.294	-0.00071	-67.519	0.0003	7.7382
4662	1	Extremo 2A	-0.00115	179.919	-0.00071	-67.519	0.00065	-78.3152
4663	0	Extremo 1A	-0.00012	336.934	9.5E-05	-134.663	7.8E-05	-87.7686
4663	0.5	Extremo 1A	-0.00012	352.559	9.5E-05	-134.663	3.1E-05	-260.142
4663	1	Extremo 1A	-0.00012	368.184	9.5E-05	-134.663	-1.7E-05	-440.328
4663	0	Extremo 2A	-0.0012	334.712	0.00055	-133.512	0.00062	-88.4173
4663	0.5	Extremo 2A	-0.0012	350.337	0.00055	-133.512	0.00034	-259.679
4663	1	Extremo 2A	-0.0012	365.962	0.00055	-133.512	6.6E-05	-438.754
4664	0	Extremo 1A	-9.4E-05	-227.574	0.00018	24.093	0.00011	-413.8
4664	0.5	Extremo 1A	-9.4E-05	-211.949	0.00018	24.093	2.4E-05	-303.92
4664	1	Extremo 1A	-9.4E-05	-196.324	0.00018	24.093	-6.4E-05	-201.852
4664	0	Extremo 2A	-0.00096	-226.731	0.00159	24.3866	0.0011	-412.43
4664	0.5	Extremo 2A	-0.00096	-211.106	0.00159	24.3866	0.0003	-302.971
4664	1	Extremo 2A	-0.00096	-195.481	0.00159	24.3866	-0.0005	-201.324
4665	0	Extremo 1A	-4.7E-05	37.452	-0.00018	-31.0755	-0.0001	-168.693
4665	0.5	Extremo 1A	-4.7E-05	53.077	-0.00018	-31.0755	-1.4E-05	-191.326
4665	1	Extremo 1A	-4.7E-05	68.702	-0.00018	-31.0755	7.6E-05	-221.77
4665	0	Extremo 2A	-0.00018	37.391	-0.00137	-30.5386	-0.00091	-168.47
4665	0.5	Extremo 2A	-0.00018	53.016	-0.00137	-30.5386	-0.00022	-191.072
4665	1	Extremo 2A	-0.00018	68.641	-0.00137	-30.5386	0.00046	-221.486
4666	0	Extremo 1A	-9.3E-05	-62.097	-0.00022	34.21	-0.00011	-215.429
4666	0.5	Extremo 1A	-9.3E-05	-46.472	-0.00022	34.21	2.2E-06	-188.287
4666	1	Extremo 1A	-9.3E-05	-30.847	-0.00022	34.21	0.00011	-168.957
4666	0	Extremo 2A	-0.00058	-61.721	-0.00213	34.4464	-0.0012	-215.229
4666	0.5	Extremo 2A	-0.00058	-46.096	-0.00213	34.4464	-8.9E-05	-188.274
4666	1	Extremo 2A	-0.00058	-30.471	-0.00213	34.4464	0.00098	-169.133
4667	0	Extremo 1A	-0.00014	-50.984	-0.00017	9.3547	-6E-05	-126.415
4667	0.5	Extremo 1A	-0.00014	-35.359	-0.00017	9.3547	2.6E-05	-104.829
4667	1	Extremo 1A	-0.00014	-19.734	-0.00017	9.3547	0.00011	-91.0555
4667	0	Extremo 2A	-0.00107	-50.792	-0.00206	9.7443	-0.00087	-126.877
4667	0.5	Extremo 2A	-0.00107	-35.167	-0.00206	9.7443	0.00016	-105.387
4667	1	Extremo 2A	-0.00107	-19.542	-0.00206	9.7443	0.0012	-91.71
4668	0	Extremo 1A	-0.00017	32.358	-4.1E-05	-60.3548	2.1E-05	-85.7852
4668	0.5	Extremo 1A	-0.00017	47.983	-4.1E-05	-60.3548	4.1E-05	-105.871
4668	1	Extremo 1A	-0.00017	63.608	-4.1E-05	-60.3548	6.1E-05	-133.768
4668	0	Extremo 2A	-0.00147	31.964	-0.00099	-59.5711	-0.00011	-86.5197
4668	0.5	Extremo 2A	-0.00147	47.589	-0.00099	-59.5711	0.00038	-106.408
4668	1	Extremo 2A	-0.00147	63.214	-0.00099	-59.5711	0.00088	-134.109
4669	0	Extremo 1A	-0.00016	40.283	0.00012	-89.4741	9.9E-05	-167.347
4669	0.5	Extremo 1A	-0.00016	55.908	0.00012	-89.4741	4E-05	-191.395
4669	1	Extremo 1A	-0.00016	71.533	0.00012	-89.4741	-1.9E-05	-223.255
4669	0	Extremo 2A	-0.00155	39.729	0.00065	-88.5214	0.00078	-167.551

4669	0.5	Extremo 2A	-0.00155	55.354	0.00065	-88.5214	0.00045	-191.322
4669	1	Extremo 2A	-0.00155	70.979	0.00065	-88.5214	0.00012	-222.905
4670	0	Extremo 1A	-0.00012	-73.62	0.00023	-36.0647	0.00015	-223.94
4670	0.5	Extremo 1A	-0.00012	-57.995	0.00023	-36.0647	3.2E-05	-191.037
4670	1	Extremo 1A	-0.00012	-42.37	0.00023	-36.0647	-8.1E-05	-165.945
4670	0	Extremo 2A	-0.00125	-73.643	0.00204	-35.3694	0.0014	-223.638
4670	0.5	Extremo 2A	-0.00125	-58.018	0.00204	-35.3694	0.0004	-190.723
4670	1	Extremo 2A	-0.00125	-42.393	0.00204	-35.3694	-0.00062	-165.621
4671	0	Extremo 1A	-5.7E-05	17.885	-0.00023	-12.2933	-0.00013	-137.651
4671	0.5	Extremo 1A	-5.7E-05	33.51	-0.00023	-12.2933	-1.9E-05	-150.499
4671	1	Extremo 1A	-5.7E-05	49.135	-0.00023	-12.2933	9.5E-05	-171.161
4671	0	Extremo 2A	-0.00019	17.933	-0.00171	-11.8229	-0.0012	-137.592
4671	0.5	Extremo 2A	-0.00019	33.558	-0.00171	-11.8229	-0.0003	-150.465
4671	1	Extremo 2A	-0.00019	49.183	-0.00171	-11.8229	0.00055	-171.15
4672	0	Extremo 1A	-0.00012	-0.49	-0.00029	0.3058	-0.00014	-165.388
4672	0.5	Extremo 1A	-0.00012	15.135	-0.00029	0.3058	1.5E-06	-169.049
4672	1	Extremo 1A	-0.00012	30.76	-0.00029	0.3058	0.00014	-180.523
4672	0	Extremo 2A	-0.00069	-0.452	-0.00276	0.7769	-0.0015	-165.453
4672	0.5	Extremo 2A	-0.00069	15.173	-0.00276	0.7769	-0.00013	-169.133
4672	1	Extremo 2A	-0.00069	30.798	-0.00276	0.7769	0.0012	-180.626
4673	0	Extremo 1A	-0.00018	-13.42	-0.00023	-11.8642	-8.1E-05	-161.616
4673	0.5	Extremo 1A	-0.00018	2.205	-0.00023	-11.8642	3.2E-05	-158.813
4673	1	Extremo 1A	-0.00018	17.83	-0.00023	-11.8642	0.00015	-163.822
4673	0	Extremo 2A	-0.00135	-13.429	-0.00273	-11.3079	-0.0012	-161.871
4673	0.5	Extremo 2A	-0.00135	2.196	-0.00273	-11.3079	0.0002	-159.063
4673	1	Extremo 2A	-0.00135	17.821	-0.00273	-11.3079	0.0016	-164.067
4674	0	Extremo 1A	-0.00021	-15.456	-6E-05	-42.6013	2.3E-05	-164.713
4674	0.5	Extremo 1A	-0.00021	0.169	-6E-05	-42.6013	5.3E-05	-160.891
4674	1	Extremo 1A	-0.00021	15.794	-6E-05	-42.6013	8.3E-05	-164.882
4674	0	Extremo 2A	-0.00188	-15.574	-0.00139	-41.867	-0.0002	-165.001
4674	0.5	Extremo 2A	-0.00188	0.051	-0.00139	-41.867	0.00049	-161.121
4674	1	Extremo 2A	-0.00188	15.676	-0.00139	-41.867	0.0012	-165.052
4675	0	Extremo 1A	-0.00021	-34.526	0.00015	-55.7604	0.00013	-186.609
4675	0.5	Extremo 1A	-0.00021	-18.901	0.00015	-55.7604	5.2E-05	-173.252
4675	1	Extremo 1A	-0.00021	-3.276	0.00015	-55.7604	-2E-05	-167.708
4675	0	Extremo 2A	-0.00201	-34.656	0.00076	-54.9444	0.00097	-186.706
4675	0.5	Extremo 2A	-0.00201	-19.031	0.00076	-54.9444	0.00059	-173.285
4675	1	Extremo 2A	-0.00201	-3.406	0.00076	-54.9444	0.00021	-167.675
4676	0	Extremo 1A	-0.00016	-65.49	0.00029	-48.1781	0.00019	-178.167
4676	0.5	Extremo 1A	-0.00016	-49.865	0.00029	-48.1781	4.2E-05	-149.329
4676	1	Extremo 1A	-0.00016	-34.24	0.00029	-48.1781	-0.0001	-128.302
4676	0	Extremo 2A	-0.00163	-65.558	0.00262	-47.353	0.0018	-178.125
4676	0.5	Extremo 2A	-0.00163	-49.933	0.00262	-47.353	0.00053	-149.252
4676	1	Extremo 2A	-0.00163	-34.308	0.00262	-47.353	-0.00078	-128.192
4677	0	Extremo 1A	-6.9E-05	22.739	-0.00029	-9.4504	-0.00017	-124.726
4677	0.5	Extremo 1A	-6.9E-05	38.364	-0.00029	-9.4504	-2.6E-05	-140.002
4677	1	Extremo 1A	-6.9E-05	53.989	-0.00029	-9.4504	0.00012	-163.09
4677	0	Extremo 2A	-0.00019	22.761	-0.00213	-8.9635	-0.0015	-124.728
4677	0.5	Extremo 2A	-0.00019	38.386	-0.00213	-8.9635	-0.00041	-140.015
4677	1	Extremo 2A	-0.00019	54.011	-0.00213	-8.9635	0.00065	-163.114
4678	0	Extremo 1A	-0.00014	9.59	-0.00037	-11.0379	-0.00018	-161.315
4678	0.5	Extremo 1A	-0.00014	25.215	-0.00037	-11.0379	1E-07	-170.017
4678	1	Extremo 1A	-0.00014	40.84	-0.00037	-11.0379	0.00018	-186.53
4678	0	Extremo 2A	-0.00083	9.578	-0.00356	-10.4623	-0.002	-161.386
4678	0.5	Extremo 2A	-0.00083	25.203	-0.00356	-10.4623	-0.00019	-170.081
4678	1	Extremo 2A	-0.00083	40.828	-0.00356	-10.4623	0.0016	-186.589
4679	0	Extremo 1A	-0.00022	-8.087	-0.0003	-18.1844	-0.00011	-182.476
4679	0.5	Extremo 1A	-0.00022	7.538	-0.0003	-18.1844	4E-05	-182.339
4679	1	Extremo 1A	-0.00022	23.163	-0.0003	-18.1844	0.00019	-190.014
4679	0	Extremo 2A	-0.00169	-8.116	-0.00361	-17.5475	-0.0016	-182.599
4679	0.5	Extremo 2A	-0.00169	7.509	-0.00361	-17.5475	0.00024	-182.447
4679	1	Extremo 2A	-0.00169	23.134	-0.00361	-17.5475	0.002	-190.107
4680	0	Extremo 1A	-0.00027	-29.173	-8.7E-05	-30.1211	2.4E-05	-194.539
4680	0.5	Extremo 1A	-0.00027	-13.548	-8.7E-05	-30.1211	6.8E-05	-183.858
4680	1	Extremo 1A	-0.00027	2.077	-8.7E-05	-30.1211	0.00011	-180.99
4680	0	Extremo 2A	-0.0024	-29.205	-0.00193	-29.4089	-0.00033	-194.653
4680	0.5	Extremo 2A	-0.0024	-13.58	-0.00193	-29.4089	0.00064	-183.956
4680	1	Extremo 2A	-0.0024	2.045	-0.00193	-29.4089	0.0016	-181.073
4681	0	Extremo 1A	-0.00027	-51.581	0.00018	-36.8201	0.00016	-194.329
4681	0.5	Extremo 1A	-0.00027	-35.956	0.00018	-36.8201	6.9E-05	-172.445
4681	1	Extremo 1A	-0.00027	-20.331	0.00018	-36.8201	-2.1E-05	-158.373
4681	0	Extremo 2A	-0.00261	-51.61	0.00088	-36.0605	0.0012	-194.383
4681	0.5	Extremo 2A	-0.00261	-35.985	0.00088	-36.0605	0.00078	-172.485
4681	1	Extremo 2A	-0.00261	-20.36	0.00088	-36.0605	0.00034	-158.399
4682	0	Extremo 1A	-0.0002	-72.124	0.00037	-40.5868	0.00024	-169.725
4682	0.5	Extremo 1A	-0.0002	-56.499	0.00037	-40.5868	5.6E-05	-137.57
4682	1	Extremo 1A	-0.0002	-40.874	0.00037	-40.5868	-0.00013	-113.226
4682	0	Extremo 2A	-0.00213	-72.154	0.00336	-39.7449	0.0024	-169.734
4682	0.5	Extremo 2A	-0.00213	-56.529	0.00336	-39.7449	0.0007	-137.563
4682	1	Extremo 2A	-0.00213	-40.904	0.00336	-39.7449	-0.00098	-113.205
4683	0	Extremo 1A	-8.3E-05	25.7	-0.00036	-8.4602	-0.00022	-122.446
4683	0.5	Extremo 1A	-8.3E-05	41.325	-0.00036	-8.4602	-3.6E-05	-139.202
4683	1	Extremo 1A	-8.3E-05	56.95	-0.00036	-8.4602	0.00015	-163.771
4683	0	Extremo 2A	-0.00017	25.707	-0.00264	-7.9548	-0.0019	-122.442
4683	0.5	Extremo 2A	-0.00017	41.332	-0.00264	-7.9548	-0.00055	-139.202
4683	1	Extremo 2A	-0.00017	56.957	-0.00264	-7.9548	0.00077	-163.774
4684	0	Extremo 1A	-0.00018	9.665	-0.00047	-12.0101	-0.00024	-165.752
4684	0.5	Extremo 1A	-0.00018	25.29	-0.00047	-12.0101	-2.3E-06	-174.491
4684	1	Extremo 1A	-0.00018	40.915	-0.00047	-12.0101	0.00023	-191.042
4684	0	Extremo 2A	-0.00099	9.663	-0.0046	-11.3936	-0.0026	-165.77
4684	0.5	Extremo 2A	-0.00099	25.288	-0.0046	-11.3936	-0.00028	-174.508
4684	1	Extremo 2A	-0.00099	40.913	-0.0046	-11.3936	0.002	-191.058
4685	0	Extremo 1A	-0.00028	-9.955	-0.00039	-16.1285	-0.00015	-193.737
4685	0.5	Extremo 1A	-0.00028	5.67	-0.00039	-16.1285	5E-05	-192.666
4685	1	Extremo 1A	-0.00028	21.295	-0.00039	-16.1285	0.00025	-199.407
4685	0	Extremo 2A	-0.00211	-9.959	-0.00479	-15.4608	-0.0021	-193.774
4685	0.5	Extremo 2A	-0.00211	5.666	-0.00479	-15.4608	0.00028	-192.701
4685	1	Extremo 2A	-0.00211	21.291	-0.00479	-15.4608	0.0027	-199.44
4686	0	Extremo 1A	-0.00035	-32.878	-0.00013	-20.8588	2.4E-05	-205.798
4686	0.5	Extremo 1A	-0.00035	-17.253	-0.00013	-20.8588	8.7E-05	-193.265
4686	1	Extremo 1A	-0.00035	-1.628	-0.00013	-20.8588	0.00015	-188.545
4686	0	Extremo 2A	-0.00307	-32.875	-0.00267	-20.1528	-0.00052	-205.838
4686	0.5	Extremo 2A	-0.00307	-17.25	-0.00267	-20.1528	0.00082	-193.307
4686	1	Extremo 2A	-0.00307	-1.625	-0.00267	-20.1528	0.0022	-188.588
4687	0	Extremo 1A	-0.00034	-55.419	0.00022	-24.3367	0.0002	-198.496
4687	0.5	Extremo 1A	-0.00034	-39.794	0.00022	-24.3367	9E-05	-174.692
4687	1	Extremo 1A	-0.00034	-24.169	0.00022	-24.3367	-2.1E-05	-158.702
4687	0	Extremo 2A	-0.00338	-55.417	0.00099	-23.6	0.0015	-198.527
4687	0.5	Extremo 2A	-0.00338	-39.792	0.00099	-23.6	0.001	-174.724
4687	1	Extremo 2A	-0.00338	-24.167	0.00099	-23.6	0.00054	-158.735
4688	0	Extremo 1A	-0.00026	-75.546	0.00047	-29.0405	0.00031	-168.993
4688	0.5	Extremo 1A	-0.00026	-59.921	0.00047	-29.0405	7.4E-05	-135.127
4688	1	Extremo 1A	-0.00026	-44.296	0.00047	-29.0405	-0.00016	-109.073
4688	0	Extremo 2A	-0.00279	-75.554	0.00431	-28.2075	0.0031	-169.01
4688	0.5	Extremo 2A	-0.00279	-59.929	0.00431	-28.2075	0.00094	-135.139
4688	1	Extremo 2A	-0.00279	-44.304	0.00431	-28.2075	-0.0012	-109.081
4689	0	Extremo 1A	-9.9E-05	26.484	-0.00046	-5.9685	-0.00028	-123.218
4689	0.5	Extremo 1A	-9.9E-05	42.109	-0.00046	-5.9685	-4.9E-05	-140.367
4689	1	Extremo 1A	-9.9E-05	57.734	-0.00046	-5.9685	0.00018	-165.328
4689	0	Extremo 2A	-0.00013	26.491	-0.00327	-5.4665	-0.0024	-123.178
4689	0.5	Extremo 2A	-0.00013	42.116	-0.00327	-5.4665	-0.00075	-140.33
4689	1	Extremo 2A	-0.00013	57.741	-0.00327	-5.4665	0.00089	-165.294
4690	0	Extremo 1A	-0.00022	8.555	-0.00061	-8.4909	-0.00031	-169.682
4690	0.5	Extremo 1A	-0.00022	24.18	-0.00061	-8.4909	-6.2E-06	-177.866
4690	1	Extremo 1A	-0.00022	39.805	-0.00061	-8.4909	0.0003	-193.862
4690	0	Extremo 2A	-0.00116	8.577	-0.00594	-7.8685	-0.0034	-169.633
4690	0.5	Extremo 2A	-0.00116	24.202	-0.00594	-7.8685	-0.00041	-177.828
4690	1	Extremo 2A	-0.00116	39.827	-0.00594	-7.8685	0.0026	-193.835
4691	0	Extremo 1A	-0.00035	-11.87	-0.00052	-10.5938	-0.0002	-199.335
4691	0.5	Extremo 1A	-0.00035	3.755	-0.00052	-10.5938	6.2E-05	-197.306
4691	1	Extremo 1A	-0.00035	19.38	-0.00052	-10.5938	0.00032	-203.09
4691	0	Extremo 2A	-0.00263	-11.839	-0.00635	-9.9198	-0.0028	-199.303
4691	0.5	Extremo 2A	-0.00263	3.786	-0.00635	-9.9198	0.00033	-197.29
4691	1	Extremo 2A	-0.00263	19.411	-0.00635	-9.9198	0.0035	-203.09
4692	0	Extremo 1A	-0.00044	-34.164	-0.00018	-12.5296	2.2E-05	-210.373
4692	0.5	Extremo 1A	-0.00044	-18.539	-0.00018	-12.5296	0.00011	-197.197
4692	1	Extremo 1A	-0.00044	-2.914	-0.00018	-12.5296	0.0002	-191.833
4692	0	Extremo 2A	-0.00393	-34.13	-0.00371	-11.8279	-0.0008	-210.369
4692	0.5	Extremo 2A	-0.00393	-18.505	-0.00371	-11.8279	0.0011	-197.21
4692	1	Extremo 2A	-0.00393	-2.88	-0.00371	-11.8279	0.0029	-191.864
4693	0	Extremo 1A	-0.00044	-56.381	0.00027	-14.2164	0.00025	-200.699
4693	0.5	Extremo 1A	-0.00044	-40.756	0.00027	-14.2164	0.00012	-176.415
4693	1	Extremo 1A	-0.00044	-25.131	0.00027	-14.2164	-1.8E-05	-159.943
4693	0	Extremo 2A	-0.00438	-56.358	0.00108	-13.4939	0.0019	-200.718

4693	0.5	Extremo 2A	-0.00438	-40.733	0.00108	-13.4939	0.0014	-176.446
4693	1	Extremo 2A	-0.00438	-25.108	0.00108	-13.4939	0.00082	-159.985
4694	0	Extremo 1A	-0.00034	-76.729	0.00061	-17.4217	0.0004	-169.4
4694	0.5	Extremo 1A	-0.00034	-61.104	0.00061	-17.4217	9.8E-05	-134.942
4694	1	Extremo 1A	-0.00034	-45.479	0.00061	-17.4217	-0.00021	-108.296
4694	0	Extremo 2A	-0.00365	-76.728	0.00552	-16.6037	0.004	-169.423
4694	0.5	Extremo 2A	-0.00365	-61.103	0.00552	-16.6037	0.0013	-134.965
4694	1	Extremo 2A	-0.00365	-45.478	0.00552	-16.6037	-0.0015	-108.32
4695	0	Extremo 1A	-0.00012	26.586	-0.00057	-2.1849	-0.00035	-124.023
4695	0.5	Extremo 1A	-0.00012	42.211	-0.00057	-2.1849	-6.7E-05	-141.222
4695	1	Extremo 1A	-0.00012	57.836	-0.00057	-2.1849	0.00022	-166.234
4695	0	Extremo 2A	-3.9E-05	26.6	-0.00404	-1.718	-0.003	-123.923
4695	0.5	Extremo 2A	-3.9E-05	42.225	-0.00404	-1.718	-0.001	-141.129
4695	1	Extremo 2A	-3.9E-05	57.85	-0.00404	-1.718	0.001	-166.148
4696	0	Extremo 1A	-0.00027	7.887	-0.00079	-3.0986	-0.00041	-171.67
4696	0.5	Extremo 1A	-0.00027	23.512	-0.00079	-3.0986	-1.2E-05	-179.52
4696	1	Extremo 1A	-0.00027	39.137	-0.00079	-3.0986	0.00038	-195.183
4696	0	Extremo 2A	-0.00135	7.946	-0.00767	-2.4988	-0.0044	-171.53
4696	0.5	Extremo 2A	-0.00135	23.571	-0.00767	-2.4988	-0.00059	-179.41
4696	1	Extremo 2A	-0.00135	39.196	-0.00767	-2.4988	0.0032	-195.102
4697	0	Extremo 1A	-0.00044	-12.8	-0.00069	-3.7674	-0.00027	-201.657
4697	0.5	Extremo 1A	-0.00044	2.825	-0.00069	-3.7674	7.6E-05	-199.164
4697	1	Extremo 1A	-0.00044	18.45	-0.00069	-3.7674	0.00042	-204.482
4697	0	Extremo 2A	-0.00328	-12.717	-0.00843	-3.1041	-0.0038	-201.547
4697	0.5	Extremo 2A	-0.00328	2.908	-0.00843	-3.1041	0.00038	-199.095
4697	1	Extremo 2A	-0.00328	18.533	-0.00843	-3.1041	0.0046	-204.455
4698	0	Extremo 1A	-0.00057	-34.68	-0.00025	-4.3323	1.7E-05	-212.126
4698	0.5	Extremo 1A	-0.00057	-19.055	-0.00025	-4.3323	0.00014	-198.692
4698	1	Extremo 1A	-0.00057	-3.43	-0.00025	-4.3323	0.00027	-193.071
4698	0	Extremo 2A	-0.00503	-34.6	-0.00513	-3.6403	-0.0012	-212.082
4698	0.5	Extremo 2A	-0.00503	-18.975	-0.00513	-3.6403	0.0014	-198.688
4698	1	Extremo 2A	-0.00503	-3.35	-0.00513	-3.6403	0.0039	-193.107
4699	0	Extremo 1A	-0.00057	-56.666	0.00033	-4.8768	0.00032	-201.654
4699	0.5	Extremo 1A	-0.00057	-41.041	0.00033	-4.8768	0.00015	-177.227
4699	1	Extremo 1A	-0.00057	-25.416	0.00033	-4.8768	-1.2E-05	-160.613
4699	0	Extremo 2A	-0.00569	-56.614	0.00113	-4.1721	0.0024	-201.671
4699	0.5	Extremo 2A	-0.00569	-40.989	0.00113	-4.1721	0.0018	-177.271
4699	1	Extremo 2A	-0.00569	-25.364	0.00113	-4.1721	0.0012	-160.683
4700	0	Extremo 1A	-0.00044	-77.08	0.00078	-6.1399	0.00052	-169.703
4700	0.5	Extremo 1A	-0.00044	-61.455	0.00078	-6.1399	0.00013	-135.069
4700	1	Extremo 1A	-0.00044	-45.83	0.00078	-6.1399	-0.00026	-108.248
4700	0	Extremo 2A	-0.00479	-77.071	0.00708	-5.3452	0.0052	-169.739
4700	0.5	Extremo 2A	-0.00479	-61.446	0.00708	-5.3452	0.0017	-135.11
4700	1	Extremo 2A	-0.00479	-45.821	0.00708	-5.3452	-0.0019	-108.294
4701	0	Extremo 1A	-0.00014	26.586	-0.00072	2.0561	-0.00045	-124.059
4701	0.5	Extremo 1A	-0.00014	42.211	-0.00072	2.0561	-9E-05	-141.258
4701	1	Extremo 1A	-0.00014	57.836	-0.00072	2.0561	0.00027	-166.27
4701	0	Extremo 2A	0.00012	26.614	-0.00497	2.4416	-0.0038	-123.863
4701	0.5	Extremo 2A	0.00012	42.239	-0.00497	2.4416	-0.0014	-141.076
4701	1	Extremo 2A	0.00012	57.864	-0.00497	2.4416	0.0011	-166.102
4702	0	Extremo 1A	-0.00033	7.87	-0.00102	2.8232	-0.00053	-171.736
4702	0.5	Extremo 1A	-0.00033	23.495	-0.00102	2.8232	-2.2E-05	-179.578
4702	1	Extremo 1A	-0.00033	39.12	-0.00102	2.8232	0.00049	-195.231
4702	0	Extremo 2A	-0.00154	7.992	-0.0099	3.3638	-0.0058	-171.455
4702	0.5	Extremo 2A	-0.00154	23.617	-0.0099	3.3638	-0.00084	-179.357
4702	1	Extremo 2A	-0.00154	39.242	-0.0099	3.3638	0.0041	-195.072
4703	0	Extremo 1A	-0.00056	-12.822	-0.0009	3.3962	-0.00036	-201.728
4703	0.5	Extremo 1A	-0.00056	2.803	-0.0009	3.3962	9.4E-05	-199.223
4703	1	Extremo 1A	-0.00056	18.428	-0.0009	3.3962	0.00055	-204.531
4703	0	Extremo 2A	-0.00407	-12.654	-0.011	4.0282	-0.0052	-201.501
4703	0.5	Extremo 2A	-0.00407	2.971	-0.011	4.0282	0.00043	-199.081
4703	1	Extremo 2A	-0.00407	18.596	-0.011	4.0282	0.006	-204.473
4704	0	Extremo 1A	-0.00072	-34.695	-0.00036	3.8725	5.4E-06	-212.182
4704	0.5	Extremo 1A	-0.00072	-19.07	-0.00036	3.8725	0.00019	-198.741
4704	1	Extremo 1A	-0.00072	-3.445	-0.00036	3.8725	0.00036	-193.113
4704	0	Extremo 2A	-0.00643	-34.537	-0.00708	4.5427	-0.0018	-212.088
4704	0.5	Extremo 2A	-0.00643	-18.912	-0.00708	4.5427	0.0017	-198.726
4704	1	Extremo 2A	-0.00643	-3.287	-0.00708	4.5427	0.0053	-193.176
4705	0	Extremo 1A	-0.00074	-56.675	0.0004	4.2805	0.0004	-201.691
4705	0.5	Extremo 1A	-0.00074	-41.05	0.0004	4.2805	0.0002	-177.26
4705	1	Extremo 1A	-0.00074	-25.425	0.0004	4.2805	9.7E-07	-160.642
4705	0	Extremo 2A	-0.0074	-56.574	0.00109	4.9536	0.0029	-201.718
4705	0.5	Extremo 2A	-0.0074	-40.949	0.00109	4.9536	0.0024	-177.337
4705	1	Extremo 2A	-0.0074	-25.324	0.00109	4.9536	0.0018	-160.769
4706	0	Extremo 1A	-0.00058	-77.089	0.001	5.0074	0.00067	-169.72
4706	0.5	Extremo 1A	-0.00058	-61.464	0.001	5.0074	0.00017	-135.082
4706	1	Extremo 1A	-0.00058	-45.839	0.001	5.0074	-0.00033	-108.256
4706	0	Extremo 2A	-0.00628	-77.069	0.00909	5.7606	0.0068	-169.787
4706	0.5	Extremo 2A	-0.00628	-61.444	0.00909	5.7606	0.0022	-135.159
4706	1	Extremo 2A	-0.00628	-45.819	0.00909	5.7606	-0.0023	-108.343
4707	0	Extremo 1A	-0.00016	26.49	-0.00091	5.8964	-0.00058	-123.324
4707	0.5	Extremo 1A	-0.00016	42.115	-0.00091	5.8964	-0.00012	-140.475
4707	1	Extremo 1A	-0.00016	57.74	-0.00091	5.8964	0.00033	-165.439
4707	0	Extremo 2A	0.00037	26.542	-0.00608	6.1234	-0.0049	-122.972
4707	0.5	Extremo 2A	0.00037	42.167	-0.00608	6.1234	-0.0018	-140.149
4707	1	Extremo 2A	0.00037	57.792	-0.00608	6.1234	0.0012	-165.139
4708	0	Extremo 1A	-0.00041	8.499	-0.00131	8.2716	-0.00069	-169.894
4708	0.5	Extremo 1A	-0.00041	24.124	-0.00131	8.2716	-3.6E-05	-178.05
4708	1	Extremo 1A	-0.00041	39.749	-0.00131	8.2716	0.00062	-194.018
4708	0	Extremo 2A	-0.00173	8.732	-0.013	8.69	-0.0076	-169.374
4708	0.5	Extremo 2A	-0.00173	24.357	-0.013	8.69	-0.0012	-177.647
4708	1	Extremo 2A	-0.00173	39.982	-0.013	8.69	0.0052	-193.731
4709	0	Extremo 1A	-0.0007	-11.945	-0.0012	10.256	-0.00048	-199.572
4709	0.5	Extremo 1A	-0.0007	3.68	-0.0012	10.256	0.00012	-197.506
4709	1	Extremo 1A	-0.0007	19.305	-0.0012	10.256	0.00071	-203.252
4709	0	Extremo 2A	-0.00504	-11.622	-0.015	10.8203	-0.007	-199.147
4709	0.5	Extremo 2A	-0.00504	4.003	-0.015	10.8203	0.00047	-197.243
4709	1	Extremo 2A	-0.00504	19.628	-0.015	10.8203	0.0079	-203.15
4710	0	Extremo 1A	-0.00092	-34.211	-0.00051	12.0728	-1.5E-05	-210.564
4710	0.5	Extremo 1A	-0.00092	-18.586	-0.00051	12.0728	0.00024	-197.365
4710	1	Extremo 1A	-0.00092	-2.961	-0.00051	12.0728	0.00049	-191.978
4710	0	Extremo 2A	-0.00822	-33.914	-0.00977	12.6995	-0.0026	-210.388
4710	0.5	Extremo 2A	-0.00822	-18.289	-0.00977	12.6995	0.0022	-197.337
4710	1	Extremo 2A	-0.00822	-2.664	-0.00977	12.6995	0.0071	-192.099
4711	0	Extremo 1A	-0.00095	-56.409	0.00049	13.6011	0.00051	-200.823
4711	0.5	Extremo 1A	-0.00095	-40.784	0.00049	13.6011	0.00027	-176.525
4711	1	Extremo 1A	-0.00095	-25.159	0.00049	13.6011	2.3E-05	-160.039
4711	0	Extremo 2A	-0.00962	-56.221	0.00092	14.2156	0.0036	-200.876
4711	0.5	Extremo 2A	-0.00962	-40.596	0.00092	14.2156	0.0031	-176.672
4711	1	Extremo 2A	-0.00962	-24.971	0.00092	14.2156	0.0027	-160.28
4712	0	Extremo 1A	-0.00075	-76.761	0.00128	16.2673	0.00087	-169.456
4712	0.5	Extremo 1A	-0.00075	-61.136	0.00128	16.2673	0.00023	-134.981
4712	1	Extremo 1A	-0.00075	-45.511	0.00128	16.2673	-0.00041	-108.32
4712	0	Extremo 2A	-0.00826	-76.723	0.012	16.9433	0.0088	-169.585
4712	0.5	Extremo 2A	-0.00826	-61.098	0.012	16.9433	0.003	-135.129
4712	1	Extremo 2A	-0.00826	-45.473	0.012	16.9433	-0.0028	-108.486
4713	0	Extremo 1A	-0.00018	25.742	-0.00113	8.5119	-0.00073	-122.591
4713	0.5	Extremo 1A	-0.00018	41.367	-0.00113	8.5119	-0.00017	-139.368
4713	1	Extremo 1A	-0.00018	56.992	-0.00113	8.5119	0.0004	-163.957
4713	0	Extremo 2A	0.00076	25.82	-0.0074	8.4483	-0.0061	-121.997
4713	0.5	Extremo 2A	0.00076	41.445	-0.0074	8.4483	-0.0024	-138.813
4713	1	Extremo 2A	0.00076	57.07	-0.0074	8.4483	0.0013	-163.442
4714	0	Extremo 1A	-0.0005	9.57	-0.0017	11.9349	-0.0009	-166.14
4714	0.5	Extremo 1A	-0.0005	25.195	-0.0017	11.9349	-5.6E-05	-174.832
4714	1	Extremo 1A	-0.0005	40.82	-0.0017	11.9349	0.00079	-191.335
4714	0	Extremo 2A	-0.00188	9.99	-0.016	12.1115	-0.0099	-165.219
4714	0.5	Extremo 2A	-0.00188	25.615	-0.016	12.1115	-0.0017	-174.12
4714	1	Extremo 2A	-0.00188	41.24	-0.016	12.1115	0.0066	-190.834
4715	0	Extremo 1A	-0.00089	-10.099	-0.00158	15.8829	-0.00065	-194.226
4715	0.5	Extremo 1A	-0.00089	5.526	-0.00158	15.8829	0.00014	-193.083
4715	1	Extremo 1A	-0.00089	21.151	-0.00158	15.8829	0.00093	-199.753
4715	0	Extremo 2A	-0.00623	-9.496	-0.02	16.3057	-0.0094	-193.444
4715	0.5	Extremo 2A	-0.00623	6.129	-0.02	16.3057	0.00049	-192.602
4715	1	Extremo 2A	-0.00623	21.754	-0.02	16.3057	0.0103	-199.573
4716	0	Extremo 1A	-0.00118	-32.967	-0.00071	20.3986	-4.9E-05	-206.209
4716	0.5	Extremo 1A	-0.00118	-17.342	-0.00071	20.3986	0.00031	-193.631
4716	1	Extremo 1A	-0.00118	-1.717	-0.00071	20.3986	0.00066	-188.866
4716	0	Extremo 2A	-0.011	-32.412	-0.013	20.9442	-0.0039	-205.879
4716	0.5	Extremo 2A	-0.011	-16.787	-0.013	20.9442	0.0029	-193.579
4716	1	Extremo 2A	-0.011	-1.162	-0.013	20.9442	0.0096	-189.092
4717	0	Extremo 1A	-0.00123	-55.482	0.00058	23.6613	0.00064	-198.745
4717	0.5	Extremo 1A	-0.00123	-39.857	0.00058	23.6613	0.00035	-174.91
4717	1	Extremo 1A	-0.00123	-24.232	0.00058	23.6613	5.8E-05	-158.888
4717	0	Extremo 2A	-0.013	-55.131	0.00052	24.1712	0.0044	-198.854

4717	0.5	Extremo 2A	-0.013	-39.506	0.00052	24.1712	0.0042	-175.195
4717	1	Extremo 2A	-0.013	-23.881	0.00052	24.1712	0.0039	-159.349
4718	0	Extremo 1A	-0.00098	-75.63	0.00164	27.8369	0.0011	-169.09
4718	0.5	Extremo 1A	-0.00098	-60.005	0.00164	27.8369	0.0003	-135.181
4718	1	Extremo 1A	-0.00098	-44.38	0.00164	27.8369	-0.00052	-109.085
4718	0	Extremo 2A	-0.011	-75.551	0.015	28.3656	0.0115	-169.342
4718	0.5	Extremo 2A	-0.011	-59.926	0.015	28.3656	0.004	-135.472
4718	1	Extremo 2A	-0.011	-44.301	0.015	28.3656	-0.0034	-109.416
4719	0	Extremo 1A	-0.0002	22.907	-0.00142	9.6824	-0.00094	-124.761
4719	0.5	Extremo 1A	-0.0002	38.532	-0.00142	9.6824	-0.00023	-140.12
4719	1	Extremo 1A	-0.0002	54.157	-0.00142	9.6824	0.00048	-163.292
4719	0	Extremo 2A	0.00136	22.99	-0.00894	9.1171	-0.0077	-123.838
4719	0.5	Extremo 2A	0.00136	38.615	-0.00894	9.1171	-0.0033	-139.24
4719	1	Extremo 2A	0.00136	54.24	-0.00894	9.1171	0.0012	-162.453
4720	0	Extremo 1A	-0.0006	9.52	-0.00219	11.2839	-0.0012	-161.857
4720	0.5	Extremo 1A	-0.0006	25.145	-0.00219	11.2839	-8.6E-05	-170.523
4720	1	Extremo 1A	-0.0006	40.77	-0.00219	11.2839	0.001	-187.002
4720	0	Extremo 2A	-0.00196	10.214	-0.021	10.9849	-0.013	-160.299
4720	0.5	Extremo 2A	-0.00196	25.839	-0.021	10.9849	-0.0023	-169.312
4720	1	Extremo 2A	-0.00196	41.464	-0.021	10.9849	0.0083	-186.137
4721	0	Extremo 1A	-0.00111	-8.271	-0.00209	18.1672	-0.00087	-183.405
4721	0.5	Extremo 1A	-0.00111	7.354	-0.00209	18.1672	0.00017	-183.176
4721	1	Extremo 1A	-0.00111	22.979	-0.00209	18.1672	0.0012	-190.759
4721	0	Extremo 2A	-0.00766	-7.186	-0.026	18.2875	-0.0126	-181.963
4721	0.5	Extremo 2A	-0.00766	8.439	-0.026	18.2875	0.00047	-182.277
4721	1	Extremo 2A	-0.00766	24.064	-0.026	18.2875	0.0136	-190.402
4722	0	Extremo 1A	-0.00151	-29.376	-0.00099	29.6137	-0.0001	-195.415
4722	0.5	Extremo 1A	-0.00151	-13.751	-0.00099	29.6137	0.00039	-184.633
4722	1	Extremo 1A	-0.00151	1.874	-0.00099	29.6137	0.00089	-181.664
4722	0	Extremo 2A	-0.013	-28.304	-0.019	30.0177	-0.0056	-194.75
4722	0.5	Extremo 2A	-0.013	-12.679	-0.019	30.0177	0.0037	-184.504
4722	1	Extremo 2A	-0.013	2.946	-0.019	30.0177	0.013	-182.071
4723	0	Extremo 1A	-0.00159	-51.779	0.00069	35.9766	0.0008	-194.781
4723	0.5	Extremo 1A	-0.00159	-36.154	0.00069	35.9766	0.00046	-172.798
4723	1	Extremo 1A	-0.00159	-20.529	0.00069	35.9766	0.00011	-158.627
4723	0	Extremo 2A	-0.016	-51.091	-0.00025	36.3127	0.0054	-195.003
4723	0.5	Extremo 2A	-0.016	-35.466	-0.00025	36.3127	0.0055	-173.364
4723	1	Extremo 2A	-0.016	-19.841	-0.00025	36.3127	0.0056	-159.537
4724	0	Extremo 1A	-0.00128	-72.346	0.0021	39.319	0.0015	-169.824
4724	0.5	Extremo 1A	-0.00128	-56.721	0.0021	39.319	0.0004	-137.557
4724	1	Extremo 1A	-0.00128	-41.096	0.0021	39.319	-0.00065	-113.103
4724	0	Extremo 2A	-0.014	-72.171	0.019	39.5529	0.015	-170.334
4724	0.5	Extremo 2A	-0.014	-56.546	0.019	39.5529	0.0054	-138.155
4724	1	Extremo 2A	-0.014	-40.921	0.019	39.5529	-0.0042	-113.788
4725	0	Extremo 1A	-0.00021	18.253	-0.00177	12.6083	-0.0012	-137.119
4725	0.5	Extremo 1A	-0.00021	33.878	-0.00177	12.6083	-0.00031	-150.152
4725	1	Extremo 1A	-0.00021	49.503	-0.00177	12.6083	0.00058	-170.998
4725	0	Extremo 2A	0.00225	18.298	-0.011	11.2622	-0.0097	-135.862
4725	0.5	Extremo 2A	0.00225	33.923	-0.011	11.2622	-0.0044	-148.917
4725	1	Extremo 2A	0.00225	49.548	-0.011	11.2622	0.00096	-169.785
4726	0	Extremo 1A	-0.00073	-0.114	-0.00283	0.6586	-0.0015	-165.691
4726	0.5	Extremo 1A	-0.00073	15.511	-0.00283	0.6586	-0.00013	-169.541
4726	1	Extremo 1A	-0.00073	31.136	-0.00283	0.6586	0.0013	-181.203
4726	0	Extremo 2A	-0.00191	0.833	-0.027	-0.5683	-0.017	-163.287
4726	0.5	Extremo 2A	-0.00191	16.458	-0.027	-0.5683	-0.0033	-167.61
4726	1	Extremo 2A	-0.00191	32.083	-0.027	-0.5683	0.0104	-179.745
4727	0	Extremo 1A	-0.0014	-13.314	-0.00277	12.395	-0.0012	-163.322
4727	0.5	Extremo 1A	-0.0014	2.311	-0.00277	12.395	0.00021	-160.572
4727	1	Extremo 1A	-0.0014	17.936	-0.00277	12.395	0.0016	-165.633
4727	0	Extremo 2A	-0.00938	-11.522	-0.035	11.8536	-0.017	-160.695
4727	0.5	Extremo 2A	-0.00938	4.103	-0.035	11.8536	0.00038	-158.841
4727	1	Extremo 2A	-0.00938	19.728	-0.035	11.8536	0.0178	-164.799
4728	0	Extremo 1A	-0.00193	-16.13	-0.00139	41.9017	-0.00019	-166.775
4728	0.5	Extremo 1A	-0.00193	-0.505	-0.00139	41.9017	0.00051	-162.617
4728	1	Extremo 1A	-0.00193	15.12	-0.00139	41.9017	0.0012	-166.271
4728	0	Extremo 2A	-0.017	-13.941	-0.026	42.0569	-0.008	-165.286
4728	0.5	Extremo 2A	-0.017	1.684	-0.026	42.0569	0.0048	-162.221
4728	1	Extremo 2A	-0.017	17.309	-0.026	42.0569	0.0175	-166.97
4729	0	Extremo 1A	-0.00206	-35.362	0.00081	54.469	0.001	-187.414
4729	0.5	Extremo 1A	-0.00206	-19.737	0.00081	54.469	0.0006	-173.639
4729	1	Extremo 1A	-0.00206	-4.112	0.00081	54.469	0.0002	-167.677
4729	0	Extremo 2A	-0.021	-33.846	-0.00158	54.5562	0.0065	-187.835
4729	0.5	Extremo 2A	-0.021	-18.221	-0.00158	54.5562	0.0073	-174.818
4729	1	Extremo 2A	-0.021	-2.596	-0.00158	54.5562	0.0081	-169.614
4730	0	Extremo 1A	-0.00167	-65.977	0.00269	46.975	0.0019	-177.978
4730	0.5	Extremo 1A	-0.00167	-50.352	0.00269	46.975	0.00054	-148.895
4730	1	Extremo 1A	-0.00167	-34.727	0.00269	46.975	-0.00081	-127.625
4730	0	Extremo 2A	-0.019	-65.643	0.025	46.5549	0.0196	-179.119
4730	0.5	Extremo 2A	-0.019	-50.018	0.025	46.5549	0.0073	-150.204
4730	1	Extremo 2A	-0.019	-34.393	0.025	46.5549	-0.005	-129.101
4731	0	Extremo 1A	-0.00022	37.019	-0.00221	30.7871	-0.0015	-166.844
4731	0.5	Extremo 1A	-0.00022	52.644	-0.00221	30.7871	-0.00041	-189.26
4731	1	Extremo 1A	-0.00022	68.269	-0.00221	30.7871	0.00069	-219.488
4731	0	Extremo 2A	0.00355	37.259	-0.013	28.4436	-0.0122	-165.399
4731	0.5	Extremo 2A	0.00355	52.884	-0.013	28.4436	-0.0059	-187.934
4731	1	Extremo 2A	0.00355	68.509	-0.013	28.4436	0.00046	-218.283
4732	0	Extremo 1A	-0.00088	-59.172	-0.00365	-31.6562	-0.002	-213.583
4732	0.5	Extremo 1A	-0.00088	-43.547	-0.00365	-31.6562	-0.00019	-187.904
4732	1	Extremo 1A	-0.00088	-27.922	-0.00365	-31.6562	0.0016	-170.036
4732	0	Extremo 2A	-0.00163	-58.598	-0.035	-34.6212	-0.0222	-210.611
4732	0.5	Extremo 2A	-0.00163	-42.973	-0.035	-34.6212	-0.0046	-185.218
4732	1	Extremo 2A	-0.00163	-27.348	-0.035	-34.6212	0.013	-167.638
4733	0	Extremo 1A	-0.00175	-49.24	-0.00367	-7.7205	-0.0016	-129.416
4733	0.5	Extremo 1A	-0.00175	-33.615	-0.00367	-7.7205	0.00025	-108.702
4733	1	Extremo 1A	-0.00175	-17.99	-0.00367	-7.7205	0.0021	-95.8011
4733	0	Extremo 2A	-0.011	-46.809	-0.046	-9.6553	-0.023	-124.846
4733	0.5	Extremo 2A	-0.011	-31.184	-0.046	-9.6553	0.00018	-105.348
4733	1	Extremo 2A	-0.011	-15.559	-0.046	-9.6553	0.0233	-93.6626
4734	0	Extremo 1A	-0.00247	29.917	-0.00193	59.2116	-0.00031	-90.964
4734	0.5	Extremo 1A	-0.00247	45.542	-0.00193	59.2116	0.00065	-109.829
4734	1	Extremo 1A	-0.00247	61.167	-0.00193	59.2116	0.0016	-136.507
4734	0	Extremo 2A	-0.022	34.579	-0.035	58.811	-0.0115	-87.3912
4734	0.5	Extremo 2A	-0.022	50.204	-0.035	58.811	0.0061	-108.587
4734	1	Extremo 2A	-0.022	65.829	-0.035	58.811	0.0237	-137.596
4735	0	Extremo 1A	-0.00267	36.558	0.00094	87.1119	0.0013	-168.977
4735	0.5	Extremo 1A	-0.00267	52.183	0.00094	87.1119	0.00079	-191.162
4735	1	Extremo 1A	-0.00267	67.808	0.00094	87.1119	0.00033	-221.16
4735	0	Extremo 2A	-0.028	40.654	-0.00375	86.9317	0.0078	-169.515
4735	0.5	Extremo 2A	-0.028	56.279	-0.00375	86.9317	0.0097	-193.749
4735	1	Extremo 2A	-0.028	71.904	-0.00375	86.9317	0.0116	-225.795
4736	0	Extremo 1A	-0.00218	-73.801	0.00345	35.6605	0.0024	-222.017
4736	0.5	Extremo 1A	-0.00218	-58.176	0.00345	35.6605	0.00071	-189.022
4736	1	Extremo 1A	-0.00218	-42.551	0.00345	35.6605	-0.001	-163.84
4736	0	Extremo 2A	-0.025	-73.818	0.031	33.6507	0.0255	-225.049
4736	0.5	Extremo 2A	-0.025	-58.193	0.031	33.6507	0.0098	-192.047
4736	1	Extremo 2A	-0.025	-42.568	0.031	33.6507	-0.0059	-166.856
4737	0	Extremo 1A	-0.00021	227.638	-0.00275	80.8252	-0.0019	-174.371
4737	0.5	Extremo 1A	-0.00021	243.263	-0.00275	80.8252	-0.00056	-292.096
4737	1	Extremo 1A	-0.00021	258.888	-0.00275	80.8252	0.00082	-417.634
4737	0	Extremo 2A	0.00542	230.191	-0.015	77.451	-0.0152	-172.552
4737	0.5	Extremo 2A	0.00542	245.816	-0.015	77.451	-0.0078	-291.554
4737	1	Extremo 2A	0.00542	261.441	-0.015	77.451	-0.00046	-418.368
4738	0	Extremo 1A	-0.00104	-323.775	-0.00471	-90.2418	-0.0026	-417.657
4738	0.5	Extremo 1A	-0.00104	-308.15	-0.00471	-90.2418	-0.00028	-259.675
4738	1	Extremo 1A	-0.00104	-292.525	-0.00471	-90.2418	0.0021	-109.507
4738	0	Extremo 2A	-0.00099	-326.389	-0.045	-95.9843	-0.0289	-416.145
4738	0.5	Extremo 2A	-0.00099	-310.764	-0.045	-95.9843	-0.0064	-256.857
4738	1	Extremo 2A	-0.00099	-295.139	-0.045	-95.9843	0.0162	-105.381
4739	0	Extremo 1A	-0.00219	-153.586	-0.00487	-32.7029	-0.0021	-74.669
4739	0.5	Extremo 1A	-0.00219	-137.961	-0.00487	-32.7029	0.0003	-1.7821
4739	1	Extremo 1A	-0.00219	-122.336	-0.00487	-32.7029	0.0027	63.2923
4739	0	Extremo 2A	-0.014	-151.467	-0.062	-37.1078	-0.031	-67.498
4739	0.5	Extremo 2A	-0.014	-135.842	-0.062	-37.1078	-0.00019	4.3293
4739	1	Extremo 2A	-0.014	-120.217	-0.062	-37.1078	0.0306	68.344
4740	0	Extremo 1A	-0.00316	142.803	-0.00268	67.0004	-0.0005	75.6624
4740	0.5	Extremo 1A	-0.00316	158.428	-0.00268	67.0004	0.00084	0.3546
4740	1	Extremo 1A	-0.00316	174.053	-0.00268	67.0004	0.0022	-82.7658
4740	0	Extremo 2A	-0.028	151.987	-0.048	64.8372	-0.0164	83.7025
4740	0.5	Extremo 2A	-0.028	167.612	-0.048	64.8372	0.0078	3.8028
4740	1	Extremo 2A	-0.028	183.237	-0.048	64.8372	0.032	-83.9095
4741	0	Extremo 1A	-0.00346	321.646	0.00106	130.72	0.0016	-92.5916
4741	0.5	Extremo 1A	-0.00346	337.271	0.00106	130.72	0.001	-257.321
4741	1	Extremo 1A	-0.00346	352.896	0.00106	130.72	0.00052	-429.863
4741	0	Extremo 2A	-0.036	334.848	-0.00721	129.983	0.0093	-91.6034

4741	0.5	Extremo 2A	-0.036	350.473	-0.00721	129.983	0.0129	-262.934
4741	1	Extremo 2A	-0.036	366.098	-0.00721	129.983	0.0165	-442.076
4742	0	Extremo 1A	-0.00285	-221.763	0.00443	-21.8609	0.0032	-404.518
4742	0.5	Extremo 1A	-0.00285	-206.138	0.00443	-21.8609	0.00095	-297.543
4742	1	Extremo 1A	-0.00285	-190.513	0.00443	-21.8609	-0.0013	-198.38
4742	0	Extremo 2A	-0.033	-226.589	0.04	-27.289	0.0333	-413.794
4742	0.5	Extremo 2A	-0.033	-210.964	0.04	-27.289	0.0132	-304.406
4742	1	Extremo 2A	-0.033	-195.339	0.04	-27.289	-0.0069	-202.83
4743	0	Extremo 1A	-0.00017	997.336	-0.00341	1.2572	-0.0025	57.1977
4743	0.5	Extremo 1A	-0.00017	1012.96	-0.00341	1.2572	-0.00075	-445.376
4743	1	Extremo 1A	-0.00017	1028.59	-0.00341	1.2572	0.00095	-955.763
4743	0	Extremo 2A	0.00809	1009.61	-0.017	-5.0886	-0.0188	62.1294
4743	0.5	Extremo 2A	0.00809	1025.24	-0.017	-5.0886	-0.0104	-446.583
4743	1	Extremo 2A	0.00809	1040.86	-0.017	-5.0886	-0.002	-963.107
4744	0	Extremo 1A	-0.00123	-1157.77	-0.00609	1.4643	-0.0034	-960.058
4744	0.5	Extremo 1A	-0.00123	-1142.15	-0.00609	1.4643	-0.0004	-385.078
4744	1	Extremo 1A	-0.00123	-1126.52	-0.00609	1.4643	0.0026	182.089
4744	0	Extremo 2A	0.00021	-1171.07	-0.058	-5.7175	-0.0378	-964.987
4744	0.5	Extremo 2A	0.00021	-1155.44	-0.058	-5.7175	-0.0089	-383.359
4744	1	Extremo 2A	0.00021	-1139.82	-0.058	-5.7175	0.02	190.456
4745	0	Extremo 1A	-0.00273	-257.702	-0.00645	1.5022	-0.0029	14.7586
4745	0.5	Extremo 1A	-0.00273	-242.077	-0.00645	1.5022	0.00035	139.704
4745	1	Extremo 1A	-0.00273	-226.452	-0.00645	1.5022	0.0036	256.836
4745	0	Extremo 2A	-0.017	-256.801	-0.082	-5.8307	-0.0418	24.1662
4745	0.5	Extremo 2A	-0.017	-241.176	-0.082	-5.8307	-0.00085	148.661
4745	1	Extremo 2A	-0.017	-225.551	-0.082	-5.8307	0.0401	265.342
4746	0	Extremo 1A	-0.00404	249.671	-0.00372	1.5162	-0.00077	273.428
4746	0.5	Extremo 1A	-0.00404	265.296	-0.00372	1.5162	0.0011	144.686
4746	1	Extremo 1A	-0.00404	280.921	-0.00372	1.5162	0.0029	8.1313
4746	0	Extremo 2A	-0.036	262.314	-0.067	-5.8387	-0.0233	286.721
4746	0.5	Extremo 2A	-0.036	277.939	-0.067	-5.8387	0.01	151.658
4746	1	Extremo 2A	-0.036	293.564	-0.067	-5.8387	0.0433	8.7823
4747	0	Extremo 1A	-0.00449	1172.06	0.00117	1.5511	0.002	212.347
4747	0.5	Extremo 1A	-0.00449	1187.68	0.00117	1.5511	0.0014	-377.588
4747	1	Extremo 1A	-0.00449	1203.31	0.00117	1.5511	0.0008	-975.335
4747	0	Extremo 2A	-0.047	1211.91	-0.013	-5.7057	0.0108	222.397
4747	0.5	Extremo 2A	-0.047	1227.54	-0.013	-5.7057	0.0171	-387.467
4747	1	Extremo 2A	-0.047	1243.16	-0.013	-5.7057	0.0234	-1005.14
4748	0	Extremo 1A	-0.00373	-919.138	0.00568	1.7541	0.0041	-927.468
4748	0.5	Extremo 1A	-0.00373	-903.513	0.00568	1.7541	0.0013	-471.805
4748	1	Extremo 1A	-0.00373	-887.888	0.00568	1.7541	-0.0016	-23.9548
4748	0	Extremo 2A	-0.044	-945.98	0.051	-4.8012	0.0435	-953.411
4748	0.5	Extremo 2A	-0.044	-930.355	0.051	-4.8012	0.0178	-484.328
4748	1	Extremo 2A	-0.044	-914.73	0.051	-4.8012	-0.0079	-23.0561
4749	0	Extremo 1A	-8.8E-05	227.637	-0.00421	-78.314	-0.0031	-174.359
4749	0.5	Extremo 1A	-8.8E-05	243.262	-0.00421	-78.314	-0.001	-292.084
4749	1	Extremo 1A	-8.8E-05	258.887	-0.00421	-78.314	0.0011	-417.622
4749	0	Extremo 2A	0.012	230.192	-0.019	-87.6157	-0.0231	-172.598
4749	0.5	Extremo 2A	0.012	245.817	-0.019	-87.6157	-0.0138	-291.6
4749	1	Extremo 2A	0.012	261.442	-0.019	-87.6157	-0.0046	-418.415
4750	0	Extremo 1A	-0.00144	-323.771	-0.00786	93.1682	-0.0045	-417.638
4750	0.5	Extremo 1A	-0.00144	-308.146	-0.00786	93.1682	-0.00058	-259.659
4750	1	Extremo 1A	-0.00144	-292.521	-0.00786	93.1682	0.0033	-109.492
4750	0	Extremo 2A	0.00228	-326.405	-0.074	84.5586	-0.0492	-416.218
4750	0.5	Extremo 2A	0.00228	-310.78	-0.074	84.5586	-0.0124	-256.922
4750	1	Extremo 2A	0.00228	-295.155	-0.074	84.5586	0.0245	-105.439
4751	0	Extremo 1A	-0.0034	-153.58	-0.00856	35.7064	-0.0039	-74.651
4751	0.5	Extremo 1A	-0.0034	-137.955	-0.00856	35.7064	0.0004	-1.7672
4751	1	Extremo 1A	-0.0034	-122.33	-0.00856	35.7064	0.0047	63.3041
4751	0	Extremo 2A	-0.02	-151.493	-0.109	25.4507	-0.0564	-67.5696
4751	0.5	Extremo 2A	-0.02	-135.868	-0.109	25.4507	-0.0019	4.2708
4751	1	Extremo 2A	-0.02	-120.243	-0.109	25.4507	0.0525	68.2987
4752	0	Extremo 1A	-0.00517	142.81	-0.00514	-63.968	-0.0012	75.6751
4752	0.5	Extremo 1A	-0.00517	158.435	-0.00514	-63.968	0.0014	0.3639
4752	1	Extremo 1A	-0.00517	174.06	-0.00514	-63.968	0.004	-82.7598
4752	0	Extremo 2A	-0.046	151.959	-0.092	-76.5135	-0.0331	83.6516
4752	0.5	Extremo 2A	-0.046	167.584	-0.092	-76.5135	0.0127	3.7658
4752	1	Extremo 2A	-0.046	183.209	-0.092	-76.5135	0.0586	-83.9325
4753	0	Extremo 1A	-0.00583	321.651	0.00124	-127.617	0.0024	-92.5856
4753	0.5	Extremo 1A	-0.00583	337.276	0.00124	-127.617	0.0018	-257.317
4753	1	Extremo 1A	-0.00583	352.901	0.00124	-127.617	0.0012	-429.862
4753	0	Extremo 2A	-0.062	334.827	-0.021	-141.394	0.0125	-91.6281
4753	0.5	Extremo 2A	-0.062	350.452	-0.021	-141.394	0.0228	-262.948
4753	1	Extremo 2A	-0.062	366.077	-0.021	-141.394	0.0331	-442.08
4754	0	Extremo 1A	-0.00489	-221.761	0.00728	25.369	0.0053	-404.517
4754	0.5	Extremo 1A	-0.00489	-206.136	0.00728	25.369	0.0017	-297.543
4754	1	Extremo 1A	-0.00489	-190.511	0.00728	25.369	-0.0019	-198.381
4754	0	Extremo 2A	-0.058	-226.598	0.066	17.6875	0.0569	-413.8
4754	0.5	Extremo 2A	-0.058	-210.973	0.066	17.6875	0.0241	-304.407
4754	1	Extremo 2A	-0.058	-195.348	0.066	17.6875	-0.0087	-202.827
4755	0	Extremo 1A	5.6E-05	37.018	-0.00518	-28.2863	-0.004	-166.816
4755	0.5	Extremo 1A	5.6E-05	52.643	-0.00518	-28.2863	-0.0014	-189.232
4755	1	Extremo 1A	5.6E-05	68.268	-0.00518	-28.2863	0.0012	-219.459
4755	0	Extremo 2A	0.017	37.26	-0.019	-38.5667	-0.0281	-165.505
4755	0.5	Extremo 2A	0.017	52.885	-0.019	-38.5667	-0.0184	-188.041
4755	1	Extremo 2A	0.017	68.51	-0.019	-38.5667	-0.0086	-218.39
4756	0	Extremo 1A	-0.00165	-59.162	-0.01	34.5754	-0.0059	-213.54
4756	0.5	Extremo 1A	-0.00165	-43.537	-0.01	34.5754	-0.00083	-187.865
4756	1	Extremo 1A	-0.00165	-27.912	-0.01	34.5754	0.0042	-170.003
4756	0	Extremo 2A	0.00568	-58.637	-0.094	23.2262	-0.0641	-210.778
4756	0.5	Extremo 2A	0.00568	-43.012	-0.094	23.2262	-0.0172	-185.366
4756	1	Extremo 2A	0.00568	-27.387	-0.094	23.2262	0.0297	-167.766
4757	0	Extremo 1A	-0.00423	-49.225	-0.011	10.7211	-0.0052	-129.375
4757	0.5	Extremo 1A	-0.00423	-33.6	-0.011	10.7211	0.00046	-108.669
4757	1	Extremo 1A	-0.00423	-17.975	-0.011	10.7211	0.0061	-95.7753
4757	0	Extremo 2A	-0.023	-46.872	-0.145	-1.987	-0.0763	-125.009
4757	0.5	Extremo 2A	-0.023	-31.247	-0.145	-1.987	-0.0037	-105.479
4757	1	Extremo 2A	-0.023	-15.622	-0.145	-1.987	0.0689	-93.7617
4758	0	Extremo 1A	-0.00661	29.933	-0.00711	-56.1796	-0.0018	-90.936
4758	0.5	Extremo 1A	-0.00661	45.558	-0.00711	-56.1796	0.0018	-109.809
4758	1	Extremo 1A	-0.00661	61.183	-0.00711	-56.1796	0.0053	-136.495
4758	0	Extremo 2A	-0.058	34.513	-0.126	-70.4824	-0.0469	-87.5043
4758	0.5	Extremo 2A	-0.058	50.138	-0.126	-70.4824	0.0162	-108.667
4758	1	Extremo 2A	-0.058	65.763	-0.126	-70.4824	0.0793	-137.642
4759	0	Extremo 1A	-0.00757	36.57	0.00124	-84.0099	0.003	-168.964
4759	0.5	Extremo 1A	-0.00757	52.195	0.00124	-84.0099	0.0024	-191.156
4759	1	Extremo 1A	-0.00757	67.82	0.00124	-84.0099	0.0018	-221.159
4759	0	Extremo 2A	-0.081	40.604	-0.033	-98.3401	0.014	-169.568
4759	0.5	Extremo 2A	-0.081	56.229	-0.033	-98.3401	0.0303	-193.776
4759	1	Extremo 2A	-0.081	71.854	-0.033	-98.3401	0.0466	-225.797
4760	0	Extremo 1A	-0.00642	-73.796	0.00934	-32.1532	0.0069	-222.015
4760	0.5	Extremo 1A	-0.00642	-58.171	0.00934	-32.1532	0.0023	-189.023
4760	1	Extremo 1A	-0.00642	-42.546	0.00934	-32.1532	-0.0024	-163.843
4760	0	Extremo 2A	-0.077	-73.838	0.083	-43.2486	0.0742	-225.059
4760	0.5	Extremo 2A	-0.077	-58.213	0.083	-43.2486	0.0326	-192.046
4760	1	Extremo 2A	-0.077	-42.588	0.083	-43.2486	-0.0091	-166.846
4761	0	Extremo 1A	0.00029	18.254	-0.00635	-10.1286	-0.005	-137.066
4761	0.5	Extremo 1A	0.00029	33.879	-0.00635	-10.1286	-0.0018	-150.1
4761	1	Extremo 1A	0.00029	49.504	-0.00635	-10.1286	0.0013	-170.945
4761	0	Extremo 2A	0.025	18.296	-0.019	-21.3018	-0.0337	-136.06
4761	0.5	Extremo 2A	0.025	33.921	-0.019	-21.3018	-0.0243	-149.114
4761	1	Extremo 2A	0.025	49.546	-0.019	-21.3018	-0.0148	-169.981
4762	0	Extremo 1A	-0.00187	-0.094	-0.013	2.246	-0.0077	-165.611
4762	0.5	Extremo 1A	-0.00187	15.531	-0.013	2.246	-0.0012	-169.47
4762	1	Extremo 1A	-0.00187	31.156	-0.013	2.246	0.0054	-181.142
4762	0	Extremo 2A	0.011	0.755	-0.119	-10.7642	-0.0832	-163.596
4762	0.5	Extremo 2A	0.011	16.38	-0.119	-10.7642	-0.0238	-167.88
4762	1	Extremo 2A	0.011	32.005	-0.119	-10.7642	0.0356	-179.976
4763	0	Extremo 1A	-0.00525	-13.283	-0.015	-9.4005	-0.007	-163.247
4763	0.5	Extremo 1A	-0.00525	2.342	-0.015	-9.4005	0.00051	-160.512
4763	1	Extremo 1A	-0.00525	17.967	-0.015	-9.4005	0.008	-165.589
4763	0	Extremo 2A	-0.026	-11.647	-0.193	-23.4643	-0.1032	-160.992
4763	0.5	Extremo 2A	-0.026	3.978	-0.193	-23.4643	-0.0065	-159.075
4763	1	Extremo 2A	-0.026	19.603	-0.193	-23.4643	0.0902	-164.97
4764	0	Extremo 1A	-0.00846	-16.098	-0.00981	-38.8711	-0.0026	-166.726
4764	0.5	Extremo 1A	-0.00846	-0.473	-0.00981	-38.8711	0.0023	-162.583
4764	1	Extremo 1A	-0.00846	15.152	-0.00981	-38.8711	0.0072	-166.253
4764	0	Extremo 2A	-0.074	-14.071	-0.174	-53.7162	-0.0662	-165.487
4764	0.5	Extremo 2A	-0.074	1.554	-0.174	-53.7162	0.0207	-162.357
4764	1	Extremo 2A	-0.074	17.179	-0.174	-53.7162	0.1076	-167.04
4765	0	Extremo 1A	-0.00985	-35.338	0.0011	-51.3682	0.0037	-187.394
4765	0.5	Extremo 1A	-0.00985	-19.713	0.0011	-51.3682	0.0032	-173.631
4765	1	Extremo 1A	-0.00985	-4.088	0.0011	-51.3682	0.0026	-167.681
4765	0	Extremo 2A	-0.106	-33.942	-0.05	-65.9562	0.0154	-187.921

4765	0.5	Extremo 2A	-0.106	-18.317	-0.05	-65.9562	0.0403	-174.856
4765	1	Extremo 2A	-0.106	-2.692	-0.05	-65.9562	0.0653	-169.604
4766	0	Extremo 1A	-0.00843	-65.969	0.012	-43.4704	0.009	-177.977
4766	0.5	Extremo 1A	-0.00843	-50.344	0.012	-43.4704	0.003	-148.899
4766	1	Extremo 1A	-0.00843	-34.719	0.012	-43.4704	-0.0029	-127.634
4766	0	Extremo 2A	-0.102	-65.679	0.105	-56.1421	0.0967	-179.129
4766	0.5	Extremo 2A	-0.102	-50.054	0.105	-56.1421	0.044	-150.196
4766	1	Extremo 2A	-0.102	-34.429	0.105	-56.1421	-0.0087	-129.075
4767	0	Extremo 1A	0.00067	22.91	-0.00774	-7.2417	-0.0063	-124.665
4767	0.5	Extremo 1A	0.00067	38.535	-0.00774	-7.2417	-0.0025	-140.026
4767	1	Extremo 1A	0.00067	54.16	-0.00774	-7.2417	0.0014	-163.2
4767	0	Extremo 2A	0.035	22.981	-0.015	-19.0054	-0.0396	-124.185
4767	0.5	Extremo 2A	0.035	38.606	-0.015	-19.0054	-0.0319	-139.582
4767	1	Extremo 2A	0.035	54.231	-0.015	-19.0054	-0.0243	-162.791
4768	0	Extremo 1A	-0.00205	9.56	-0.017	-8.4065	-0.0101	-161.713
4768	0.5	Extremo 1A	-0.00205	25.185	-0.017	-8.4065	-0.0017	-170.399
4768	1	Extremo 1A	-0.00205	40.81	-0.017	-8.4065	0.0068	-186.898
4768	0	Extremo 2A	0.019	10.064	-0.149	-22.2019	-0.1078	-160.838
4768	0.5	Extremo 2A	0.019	25.689	-0.149	-22.2019	-0.0331	-169.776
4768	1	Extremo 2A	0.019	41.314	-0.149	-22.2019	0.0416	-186.526
4769	0	Extremo 1A	-0.00648	-8.211	-0.02	-15.1847	-0.0095	-183.274
4769	0.5	Extremo 1A	-0.00648	7.414	-0.02	-15.1847	0.00054	-183.074
4769	1	Extremo 1A	-0.00648	23.039	-0.02	-15.1847	0.0105	-190.688
4769	0	Extremo 2A	-0.029	-7.423	-0.258	-29.8367	-0.1399	-182.475
4769	0.5	Extremo 2A	-0.029	8.202	-0.258	-29.8367	-0.0108	-182.67
4769	1	Extremo 2A	-0.029	23.827	-0.258	-29.8367	0.1182	-190.677
4770	0	Extremo 1A	-0.011	-29.315	-0.014	-26.5871	-0.0038	-195.333
4770	0.5	Extremo 1A	-0.011	-13.69	-0.014	-26.5871	0.003	-184.582
4770	1	Extremo 1A	-0.011	1.935	-0.014	-26.5871	0.0097	-181.643
4770	0	Extremo 2A	-0.094	-28.547	-0.24	-41.6488	-0.0935	-195.086
4770	0.5	Extremo 2A	-0.094	-12.922	-0.24	-41.6488	0.0264	-184.718
4770	1	Extremo 2A	-0.094	2.703	-0.24	-41.6488	0.1463	-182.163
4771	0	Extremo 1A	-0.013	-51.735	0.00074	-32.8802	0.0046	-194.753
4771	0.5	Extremo 1A	-0.013	-36.11	0.00074	-32.8802	0.0042	-172.792
4771	1	Extremo 1A	-0.013	-20.485	0.00074	-32.8802	0.0039	-158.643
4771	0	Extremo 2A	-0.139	-51.267	-0.075	-47.6897	0.0164	-195.134
4771	0.5	Extremo 2A	-0.139	-35.642	-0.075	-47.6897	0.0537	-173.406
4771	1	Extremo 2A	-0.139	-20.017	-0.075	-47.6897	0.091	-159.491
4772	0	Extremo 1A	-0.011	-72.331	0.015	-35.8218	0.0118	-169.829
4772	0.5	Extremo 1A	-0.011	-56.706	0.015	-35.8218	0.0041	-137.569
4772	1	Extremo 1A	-0.011	-41.081	0.015	-35.8218	-0.0036	-113.122
4772	0	Extremo 2A	-0.136	-72.232	0.132	-49.1129	0.1256	-170.336
4772	0.5	Extremo 2A	-0.136	-56.607	0.132	-49.1129	0.0596	-138.126
4772	1	Extremo 2A	-0.136	-40.982	0.132	-49.1129	-0.0065	-113.729
4773	0	Extremo 1A	0.00125	25.752	-0.00936	-6.1416	-0.008	-122.42
4773	0.5	Extremo 1A	0.00125	41.377	-0.00936	-6.1416	-0.0033	-139.202
4773	1	Extremo 1A	0.00125	57.002	-0.00936	-6.1416	0.0014	-163.797
4773	0	Extremo 2A	0.049	25.795	-0.00681	-18.0718	-0.0453	-122.588
4773	0.5	Extremo 2A	0.049	41.42	-0.00681	-18.0718	-0.0419	-139.392
4773	1	Extremo 2A	0.049	57.045	-0.00681	-18.0718	-0.0384	-164.008
4774	0	Extremo 1A	-0.00218	9.648	-0.022	-9.1071	-0.0132	-165.887
4774	0.5	Extremo 1A	-0.00218	25.273	-0.022	-9.1071	-0.0023	-174.617
4774	1	Extremo 1A	-0.00218	40.898	-0.022	-9.1071	0.0085	-191.16
4774	0	Extremo 2A	0.032	9.71	-0.186	-23.1211	-0.139	-166.139
4774	0.5	Extremo 2A	0.032	25.335	-0.186	-23.1211	-0.046	-174.9
4774	1	Extremo 2A	0.032	40.96	-0.186	-23.1211	0.047	-191.474
4775	0	Extremo 1A	-0.00799	-9.984	-0.027	-12.9233	-0.0128	-194.001
4775	0.5	Extremo 1A	-0.00799	5.641	-0.027	-12.9233	0.00053	-192.915
4775	1	Extremo 1A	-0.00799	21.266	-0.027	-12.9233	0.0138	-199.642
4775	0	Extremo 2A	-0.031	-9.932	-0.345	-27.737	-0.1899	-194.309
4775	0.5	Extremo 2A	-0.031	5.693	-0.345	-27.737	-0.0175	-193.249
4775	1	Extremo 2A	-0.031	21.318	-0.345	-27.737	0.1549	-200.001
4776	0	Extremo 1A	-0.014	-32.854	-0.019	-17.382	-0.0055	-206.077
4776	0.5	Extremo 1A	-0.014	-17.229	-0.019	-17.382	0.0038	-193.556
4776	1	Extremo 1A	-0.014	-1.604	-0.019	-17.382	0.0131	-188.848
4776	0	Extremo 2A	-0.12	-32.858	-0.332	-32.5127	-0.1321	-206.43
4776	0.5	Extremo 2A	-0.12	-17.233	-0.332	-32.5127	0.0338	-193.908
4776	1	Extremo 2A	-0.12	-1.608	-0.332	-32.5127	0.1997	-189.197
4777	0	Extremo 1A	-0.017	-55.402	2.8E-05	-20.577	0.0056	-198.71
4777	0.5	Extremo 1A	-0.017	-39.777	2.8E-05	-20.577	0.0056	-174.916
4777	1	Extremo 1A	-0.017	-24.152	2.8E-05	-20.577	0.0056	-158.933
4777	0	Extremo 2A	-0.182	-55.45	-0.108	-35.4929	0.0173	-199.045
4777	0.5	Extremo 2A	-0.182	-39.825	-0.108	-35.4929	0.0715	-175.226
4777	1	Extremo 2A	-0.182	-24.2	-0.108	-35.4929	0.1258	-159.22
4778	0	Extremo 1A	-0.015	-75.606	0.02	-24.357	0.0153	-169.108
4778	0.5	Extremo 1A	-0.015	-59.981	0.02	-24.357	0.0055	-135.211
4778	1	Extremo 1A	-0.015	-44.356	0.02	-24.357	-0.0044	-109.127
4778	0	Extremo 2A	-0.181	-75.655	0.163	-37.8636	0.1621	-169.318
4778	0.5	Extremo 2A	-0.181	-60.03	0.163	-37.8636	0.0805	-135.397
4778	1	Extremo 2A	-0.181	-44.405	0.163	-37.8636	-0.0011	-109.288
4779	0	Extremo 1A	0.00211	26.515	-0.011	-3.6534	-0.01	-123.021
4779	0.5	Extremo 1A	0.00211	42.14	-0.011	-3.6534	-0.0044	-140.185
4779	1	Extremo 1A	0.00211	57.765	-0.011	-3.6534	0.0012	-165.161
4779	0	Extremo 2A	0.068	26.486	0.01	-15.2905	-0.0495	-123.963
4779	0.5	Extremo 2A	0.068	42.111	0.01	-15.2905	-0.0545	-141.112
4779	1	Extremo 2A	0.068	57.736	0.01	-15.2905	-0.0595	-166.074
4780	0	Extremo 1A	-0.00218	8.651	-0.028	-5.5345	-0.0173	-169.448
4780	0.5	Extremo 1A	-0.00218	24.276	-0.028	-5.5345	-0.0033	-177.68
4780	1	Extremo 1A	-0.00218	39.901	-0.028	-5.5345	0.0107	-193.724
4780	0	Extremo 2A	0.052	8.226	-0.228	-19.3295	-0.1782	-170.922
4780	0.5	Extremo 2A	0.052	23.851	-0.228	-19.3295	-0.0639	-178.941
4780	1	Extremo 2A	0.052	39.476	-0.228	-19.3295	0.0503	-194.773
4781	0	Extremo 1A	-0.00979	-11.727	-0.035	-7.3408	-0.0172	-199.184
4781	0.5	Extremo 1A	-0.00979	3.898	-0.035	-7.3408	0.00046	-197.227
4781	1	Extremo 1A	-0.00979	19.523	-0.035	-7.3408	0.0181	-203.082
4781	0	Extremo 2A	-0.03	-12.414	-0.461	-22.0261	-0.2586	-200.599
4781	0.5	Extremo 2A	-0.03	3.211	-0.461	-22.0261	-0.0279	-198.298
4781	1	Extremo 2A	-0.03	18.836	-0.461	-22.0261	0.2027	-203.81
4782	0	Extremo 1A	-0.018	-33.999	-0.026	-9.0789	-0.008	-210.351
4782	0.5	Extremo 1A	-0.018	-18.374	-0.026	-9.0789	0.0049	-197.257
4782	1	Extremo 1A	-0.018	-2.749	-0.026	-9.0789	0.0177	-191.976
4782	0	Extremo 2A	-0.151	-34.728	-0.461	-24.1336	-0.1869	-211.295
4782	0.5	Extremo 2A	-0.151	-19.103	-0.461	-24.1336	0.0436	-197.837
4782	1	Extremo 2A	-0.151	-3.478	-0.461	-24.1336	0.2741	-192.192
4783	0	Extremo 1A	-0.022	-56.266	-0.00123	-10.5448	0.0068	-200.785
4783	0.5	Extremo 1A	-0.022	-40.641	-0.00123	-10.5448	0.0074	-176.558
4783	1	Extremo 1A	-0.022	-25.016	-0.00123	-10.5448	0.008	-160.144
4783	0	Extremo 2A	-0.237	-56.799	-0.152	-25.4144	0.019	-201.155
4783	0.5	Extremo 2A	-0.237	-41.174	-0.152	-25.4144	0.0952	-176.662
4783	1	Extremo 2A	-0.237	-25.549	-0.152	-25.4144	0.1713	-159.981
4784	0	Extremo 1A	-0.019	-76.722	0.025	-12.8252	0.02	-169.503
4784	0.5	Extremo 1A	-0.019	-61.097	0.025	-12.8252	0.0074	-135.048
4784	1	Extremo 1A	-0.019	-45.472	0.025	-12.8252	-0.0052	-108.406
4784	0	Extremo 2A	-0.24	-76.9	0.196	-26.3098	0.2066	-169.505
4784	0.5	Extremo 2A	-0.24	-61.275	0.196	-26.3098	0.1086	-134.962
4784	1	Extremo 2A	-0.24	-45.65	0.196	-26.3098	0.0106	-108.231
4785	0	Extremo 1A	0.00338	26.643	-0.013	-0.0435	-0.0126	-123.522
4785	0.5	Extremo 1A	0.00338	42.268	-0.013	-0.0435	-0.0059	-140.75
4785	1	Extremo 1A	0.00338	57.893	-0.013	-0.0435	0.00074	-165.79
4785	0	Extremo 2A	0.096	26.506	0.041	-10.8342	-0.0501	-125.491
4785	0.5	Extremo 2A	0.096	42.131	0.041	-10.8342	-0.0704	-142.65
4785	1	Extremo 2A	0.096	57.756	0.041	-10.8342	-0.0907	-167.622
4786	0	Extremo 1A	-0.00197	8.163	-0.036	-0.2537	-0.0226	-170.949
4786	0.5	Extremo 1A	-0.00197	23.788	-0.036	-0.2537	-0.0046	-178.937
4786	1	Extremo 1A	-0.00197	39.413	-0.036	-0.2537	0.0134	-194.737
4786	0	Extremo 2A	0.082	7.1	-0.275	-13.3478	-0.2264	-174.021
4786	0.5	Extremo 2A	0.082	22.725	-0.275	-13.3478	-0.089	-181.477
4786	1	Extremo 2A	0.082	38.35	-0.275	-13.3478	0.0485	-196.746
4787	0	Extremo 1A	-0.012	-12.41	-0.047	-0.5667	-0.0232	-201.057
4787	0.5	Extremo 1A	-0.012	3.215	-0.047	-0.5667	0.00028	-198.758
4787	1	Extremo 1A	-0.012	18.84	-0.047	-0.5667	0.0238	-204.272
4787	0	Extremo 2A	-0.022	-14.066	-0.618	-14.8021	-0.3531	-203.923
4787	0.5	Extremo 2A	-0.022	1.559	-0.618	-14.8021	-0.0441	-200.796
4787	1	Extremo 2A	-0.022	17.184	-0.618	-14.8021	0.2649	-205.482
4788	0	Extremo 1A	-0.023	-34.305	-0.035	-0.9274	-0.0114	-211.834
4788	0.5	Extremo 1A	-0.023	-18.68	-0.035	-0.9274	0.0062	-198.588
4788	1	Extremo 1A	-0.023	-3.055	-0.035	-0.9274	0.0239	-193.154
4788	0	Extremo 2A	-0.191	-36.012	-0.646	-15.6939	-0.2658	-213.593
4788	0.5	Extremo 2A	-0.191	-20.387	-0.646	-15.6939	0.0572	-199.494
4788	1	Extremo 2A	-0.191	-4.762	-0.646	-15.6939	0.3801	-193.207
4789	0	Extremo 1A	-0.028	-56.418	-0.00333	-1.284	0.0082	-201.658
4789	0.5	Extremo 1A	-0.028	-40.793	-0.00333	-1.284	0.0099	-177.355
4789	1	Extremo 1A	-0.028	-25.168	-0.00333	-1.284	0.0115	-160.865
4789	0	Extremo 2A	-0.308	-57.625	-0.203	-15.8932	0.0248	-202.14

4789	0.5	Extremo 2A	-0.308	-42	-0.203	-15.8932	0.1263	-177.234
4789	1	Extremo 2A	-0.308	-26.375	-0.203	-15.8932	0.2278	-160.14
4790	0	Extremo 1A	-0.025	-77.024	0.032	-1.6424	0.0261	-169.827
4790	0.5	Extremo 1A	-0.025	-61.399	0.032	-1.6424	0.0099	-135.222
4790	1	Extremo 1A	-0.025	-45.774	0.032	-1.6424	-0.0062	-108.428
4790	0	Extremo 2A	-0.317	-77.375	0.222	-14.8611	0.257	-169.6
4790	0.5	Extremo 2A	-0.317	-61.75	0.222	-14.8611	0.1459	-134.819
4790	1	Extremo 2A	-0.317	-46.125	0.222	-14.8611	0.0349	-107.85
4791	0	Extremo 1A	0.00522	26.703	-0.016	3.7784	-0.0157	-123.081
4791	0.5	Extremo 1A	0.00522	42.328	-0.016	3.7784	-0.0079	-140.338
4791	1	Extremo 1A	0.00522	57.953	-0.016	3.7784	-0.00012	-165.408
4791	0	Extremo 2A	0.133	26.41	0.092	-5.3858	-0.0436	-126.527
4791	0.5	Extremo 2A	0.133	42.035	0.092	-5.3858	-0.0898	-143.638
4791	1	Extremo 2A	0.133	57.66	0.092	-5.3858	-0.1361	-168.561
4792	0	Extremo 1A	-0.00141	8.448	-0.046	5.3536	-0.0295	-170.277
4792	0.5	Extremo 1A	-0.00141	24.073	-0.046	5.3536	-0.0064	-178.407
4792	1	Extremo 1A	-0.00141	39.698	-0.046	5.3536	0.0167	-194.35
4792	0	Extremo 2A	0.13	6.428	-0.32	-6.3373	-0.2837	-175.696
4792	0.5	Extremo 2A	0.13	22.053	-0.32	-6.3373	-0.1239	-182.816
4792	1	Extremo 2A	0.13	37.678	-0.32	-6.3373	0.0358	-197.749
4793	0	Extremo 1A	-0.014	-12.025	-0.062	6.4286	-0.0313	-200.482
4793	0.5	Extremo 1A	-0.014	3.6	-0.062	6.4286	-7.8E-05	-198.376
4793	1	Extremo 1A	-0.014	19.225	-0.062	6.4286	0.0312	-204.083
4793	0	Extremo 2A	-0.00252	-15.177	-0.828	-6.8457	-0.4838	-205.539
4793	0.5	Extremo 2A	-0.00252	0.448	-0.828	-6.8457	-0.0697	-201.857
4793	1	Extremo 2A	-0.00252	16.073	-0.828	-6.8457	0.3444	-205.987
4794	0	Extremo 1A	-0.029	-33.967	-0.049	7.1784	-0.0164	-211.548
4794	0.5	Extremo 1A	-0.029	-18.342	-0.049	7.1784	0.008	-198.471
4794	1	Extremo 1A	-0.029	-2.717	-0.049	7.1784	0.0324	-193.207
4794	0	Extremo 2A	-0.239	-37.248	-0.918	-6.9189	-0.3816	-214.602
4794	0.5	Extremo 2A	-0.239	-21.623	-0.918	-6.9189	0.0772	-199.885
4794	1	Extremo 2A	-0.239	-5.998	-0.918	-6.9189	0.536	-192.979
4795	0	Extremo 1A	-0.037	-56.207	-0.00669	7.755	0.0097	-201.645
4795	0.5	Extremo 1A	-0.037	-40.582	-0.00669	7.755	0.0131	-177.448
4795	1	Extremo 1A	-0.037	-24.957	-0.00669	7.755	0.0164	-161.063
4795	0	Extremo 2A	-0.397	-58.55	-0.245	-6.2338	0.0443	-202.365
4795	0.5	Extremo 2A	-0.397	-42.925	-0.245	-6.2338	0.1668	-176.996
4795	1	Extremo 2A	-0.397	-27.3	-0.245	-6.2338	0.2894	-159.44
4796	0	Extremo 1A	-0.034	-76.971	0.041	9.3536	0.0341	-169.93
4796	0.5	Extremo 1A	-0.034	-61.346	0.041	9.3536	0.0134	-135.35
4796	1	Extremo 1A	-0.034	-45.721	0.041	9.3536	-0.0073	-108.584
4796	0	Extremo 2A	-0.416	-77.608	0.219	-3.2364	0.3041	-169.366
4796	0.5	Extremo 2A	-0.416	-61.983	0.219	-3.2364	0.1946	-134.468
4796	1	Extremo 2A	-0.416	-46.358	0.219	-3.2364	0.0851	-107.383
4797	0	Extremo 1A	0.00785	26.692	-0.018	6.8012	-0.0194	-121.604
4797	0.5	Extremo 1A	0.00785	42.317	-0.018	6.8012	-0.0105	-138.857
4797	1	Extremo 1A	0.00785	57.942	-0.018	6.8012	-0.0016	-163.922
4797	0	Extremo 2A	0.186	26.189	0.178	0.4476	-0.024	-127.196
4797	0.5	Extremo 2A	0.186	41.814	0.178	0.4476	-0.1128	-144.196
4797	1	Extremo 2A	0.186	57.439	0.178	0.4476	-0.2016	-169.009
4798	0	Extremo 1A	-0.00031	9.599	-0.059	10.1445	-0.0385	-167.229
4798	0.5	Extremo 1A	-0.00031	25.224	-0.059	10.1445	-0.0089	-175.935
4798	1	Extremo 1A	-0.00031	40.849	-0.059	10.1445	0.0207	-192.453
4798	0	Extremo 2A	0.204	6.094	-0.35	1.0023	-0.3479	-176.193
4798	0.5	Extremo 2A	0.204	21.719	-0.35	1.0023	-0.1727	-183.146
4798	1	Extremo 2A	0.204	37.344	-0.35	1.0023	0.0025	-197.912
4799	0	Extremo 1A	-0.017	-10.422	-0.083	12.9187	-0.0423	-197.248
4799	0.5	Extremo 1A	-0.017	5.203	-0.083	12.9187	-0.00071	-195.943
4799	1	Extremo 1A	-0.017	20.828	-0.083	12.9187	0.0408	-202.451
4799	0	Extremo 2A	0.041	-16.009	-1.106	1.5212	-0.6645	-205.746
4799	0.5	Extremo 2A	0.041	-0.384	-1.106	1.5212	-0.1114	-201.648
4799	1	Extremo 2A	0.041	15.241	-1.106	1.5212	0.4417	-205.362
4800	0	Extremo 1A	-0.037	-32.861	-0.067	15.1859	-0.0233	-209.382
4800	0.5	Extremo 1A	-0.037	-17.236	-0.067	15.1859	0.0102	-196.858
4800	1	Extremo 1A	-0.037	-1.611	-0.067	15.1859	0.0437	-192.146
4800	0	Extremo 2A	-0.296	-38.808	-1.334	2.507	-0.558	-214.587
4800	0.5	Extremo 2A	-0.296	-23.183	-1.334	2.507	0.1092	-199.09
4800	1	Extremo 2A	-0.296	-7.558	-1.334	2.507	0.7765	-191.405
4801	0	Extremo 1A	-0.048	-55.556	-0.012	16.8759	0.0114	-200.754
4801	0.5	Extremo 1A	-0.048	-39.931	-0.012	16.8759	0.0174	-176.882
4801	1	Extremo 1A	-0.048	-24.306	-0.012	16.8759	0.0233	-160.823
4801	0	Extremo 2A	-0.502	-59.979	-0.231	4.1963	0.1034	-202.011
4801	0.5	Extremo 2A	-0.502	-44.354	-0.231	4.1963	0.2187	-175.928
4801	1	Extremo 2A	-0.502	-28.729	-0.231	4.1963	0.334	-157.657
4802	0	Extremo 1A	-0.045	-76.53	0.053	20.3463	0.0445	-169.864
4802	0.5	Extremo 1A	-0.045	-60.905	0.053	20.3463	0.0181	-135.505
4802	1	Extremo 1A	-0.045	-45.28	0.053	20.3463	-0.0083	-108.959
4802	0	Extremo 2A	-0.538	-77.675	0.13	8.9921	0.3212	-168.783
4802	0.5	Extremo 2A	-0.538	-62.05	0.13	8.9921	0.256	-133.852
4802	1	Extremo 2A	-0.538	-46.425	0.13	8.9921	0.1909	-106.734
4803	0	Extremo 1A	0.012	25.982	-0.02	7.9397	-0.0239	-119.827
4803	0.5	Extremo 1A	0.012	41.607	-0.02	7.9397	-0.014	-136.724
4803	1	Extremo 1A	0.012	57.232	-0.02	7.9397	-0.0041	-161.434
4803	0	Extremo 2A	0.259	25.269	0.311	6.1799	0.0168	-128.358
4803	0.5	Extremo 2A	0.259	40.894	0.311	6.1799	-0.1387	-144.899
4803	1	Extremo 2A	0.259	56.519	0.311	6.1799	-0.2941	-169.252
4804	0	Extremo 1A	0.00165	11.515	-0.076	12.4915	-0.0502	-161.51
4804	0.5	Extremo 1A	0.00165	27.14	-0.076	12.4915	-0.0124	-171.174
4804	1	Extremo 1A	0.00165	42.765	-0.076	12.4915	0.0254	-188.65
4804	0	Extremo 2A	0.317	5.799	-0.344	7.8013	-0.4124	-175.669
4804	0.5	Extremo 2A	0.317	21.424	-0.344	7.8013	-0.2404	-182.475
4804	1	Extremo 2A	0.317	37.049	-0.344	7.8013	-0.0684	-197.093
4805	0	Extremo 1A	-0.021	-7.288	-0.111	17.758	-0.0571	-189.962
4805	0.5	Extremo 1A	-0.021	8.337	-0.111	17.758	-0.0018	-190.225
4805	1	Extremo 1A	-0.021	23.962	-0.111	17.758	0.0535	-198.3
4805	0	Extremo 2A	0.131	-16.847	-1.46	9.9007	-0.9124	-203.816
4805	0.5	Extremo 2A	0.131	-1.222	-1.46	9.9007	-0.1823	-199.298
4805	1	Extremo 2A	0.131	14.403	-1.46	9.9007	0.5478	-202.593
4806	0	Extremo 1A	-0.047	-30.467	-0.092	23.1779	-0.0331	-203.991
4806	0.5	Extremo 1A	-0.047	-14.842	-0.092	23.1779	0.0131	-192.664
4806	1	Extremo 1A	-0.047	0.783	-0.092	23.1779	0.0592	-189.149
4806	0	Extremo 2A	-0.363	-40.908	-2.015	13.398	-0.8422	-212.718
4806	0.5	Extremo 2A	-0.363	-25.283	-2.015	13.398	0.1653	-196.17
4806	1	Extremo 2A	-0.363	-9.658	-2.015	13.398	1.1728	-187.435
4807	0	Extremo 1A	-0.063	-53.892	-0.02	26.625	0.0132	-198.69
4807	0.5	Extremo 1A	-0.063	-38.267	-0.02	26.625	0.0231	-175.65
4807	1	Extremo 1A	-0.063	-22.642	-0.02	26.625	0.033	-160.423
4807	0	Extremo 2A	-0.616	-62.102	-0.029	16.7398	0.2682	-201.206
4807	0.5	Extremo 2A	-0.616	-46.477	-0.029	16.7398	0.2826	-174.061
4807	1	Extremo 2A	-0.616	-30.852	-0.029	16.7398	0.297	-154.729
4808	0	Extremo 1A	-0.059	-75.13	0.067	31.4071	0.0581	-169.94
4808	0.5	Extremo 1A	-0.059	-59.505	0.067	31.4071	0.0244	-136.281
4808	1	Extremo 1A	-0.059	-43.88	0.067	31.4071	-0.0093	-110.435
4808	0	Extremo 2A	-0.676	-77.327	-0.183	22.255	0.2372	-168.275
4808	0.5	Extremo 2A	-0.676	-61.702	-0.183	22.255	0.3286	-133.518
4808	1	Extremo 2A	-0.676	-46.077	-0.183	22.255	0.42	-106.573
4809	0	Extremo 1A	0.017	22.908	-0.021	6.6612	-0.0291	-120.91
4809	0.5	Extremo 1A	0.017	38.533	-0.021	6.6612	-0.0186	-136.27
4809	1	Extremo 1A	0.017	54.158	-0.021	6.6612	-0.008	-159.443
4809	0	Extremo 2A	0.341	22.195	0.504	11.9774	0.0853	-132.928
4809	0.5	Extremo 2A	0.341	37.82	0.504	11.9774	-0.1666	-147.932
4809	1	Extremo 2A	0.341	53.445	0.504	11.9774	-0.4185	-170.748
4810	0	Extremo 1A	0.00489	12.541	-0.096	9.2	-0.0653	-154.333
4810	0.5	Extremo 1A	0.00489	28.166	-0.096	9.2	-0.0172	-164.51
4810	1	Extremo 1A	0.00489	43.791	-0.096	9.2	0.0309	-182.499
4810	0	Extremo 2A	0.47	3.973	-0.262	12.0407	-0.465	-175.44
4810	0.5	Extremo 2A	0.47	19.598	-0.262	12.0407	-0.3339	-181.333
4810	1	Extremo 2A	0.47	35.223	-0.262	12.0407	-0.2027	-195.039
4811	0	Extremo 1A	-0.024	-3.392	-0.147	18.3086	-0.0771	-175.56
4811	0.5	Extremo 1A	-0.024	12.233	-0.147	18.3086	-0.0035	-177.771
4811	1	Extremo 1A	-0.024	27.858	-0.147	18.3086	0.0701	-187.794
4811	0	Extremo 2A	0.295	-19.333	-1.866	17.002	-1.2439	-197.476
4811	0.5	Extremo 2A	0.295	-3.708	-1.866	17.002	-0.311	-191.716
4811	1	Extremo 2A	0.295	11.917	-1.866	17.002	0.6219	-193.768
4812	0	Extremo 1A	-0.06	-24.512	-0.127	31.8984	-0.0469	-190.895
4812	0.5	Extremo 1A	-0.06	-8.887	-0.127	31.8984	0.0167	-182.546
4812	1	Extremo 1A	-0.06	6.738	-0.127	31.8984	0.0802	-182.009
4812	0	Extremo 2A	-0.444	-42.803	-3.218	27.7733	-1.3363	-205.135
4812	0.5	Extremo 2A	-0.444	-27.178	-3.218	27.7733	0.2727	-187.64
4812	1	Extremo 2A	-0.444	-11.553	-3.218	27.7733	1.8817	-177.957
4813	0	Extremo 1A	-0.083	-48.525	-0.032	38.5621	0.015	-194.813
4813	0.5	Extremo 1A	-0.083	-32.9	-0.032	38.5621	0.0308	-174.457
4813	1	Extremo 1A	-0.083	-17.275	-0.032	38.5621	0.0466	-161.913
4813	0	Extremo 2A	-0.703	-62.222	0.698	35.0725	0.7052	-199.744

4813	0.5	Extremo 2A	-0.703	-46.597	0.698	35.0725	0.356	-172.539
4813	1	Extremo 2A	-0.703	-30.972	0.698	35.0725	0.0068	-153.147
4814	0	Extremo 1A	-0.078	-71.166	0.086	41.7914	0.0758	-171.762
4814	0.5	Extremo 1A	-0.078	-55.541	0.086	41.7914	0.033	-140.085
4814	1	Extremo 1A	-0.078	-39.916	0.086	41.7914	-0.0099	-116.221
4814	0	Extremo 2A	-0.789	-76.783	-1.06	36.0787	-0.1272	-170.852
4814	0.5	Extremo 2A	-0.789	-61.158	-1.06	36.0787	0.4027	-136.366
4814	1	Extremo 2A	-0.789	-45.533	-1.06	36.0787	0.9327	-109.694
4815	0	Extremo 1A	0.024	17.671	-0.021	6.2095	-0.035	-133.127
4815	0.5	Extremo 1A	0.024	33.296	-0.021	6.2095	-0.0245	-145.869
4815	1	Extremo 1A	0.024	48.921	-0.021	6.2095	-0.014	-166.423
4815	0	Extremo 2A	0.364	17.444	0.739	21.4493	0.1743	-148.112
4815	0.5	Extremo 2A	0.364	33.069	0.739	21.4493	-0.1952	-160.74
4815	1	Extremo 2A	0.364	48.694	0.739	21.4493	-0.5648	-181.181
4816	0	Extremo 1A	0.01	3.006	-0.122	-6.7537	-0.0848	-155.249
4816	0.5	Extremo 1A	0.01	18.631	-0.122	-6.7537	-0.0239	-160.658
4816	1	Extremo 1A	0.01	34.256	-0.122	-6.7537	0.037	-173.88
4816	0	Extremo 2A	0.569	-7.934	-0.07	8.1621	-0.4932	-183.721
4816	0.5	Extremo 2A	0.569	7.691	-0.07	8.1621	-0.4581	-183.661
4816	1	Extremo 2A	0.569	23.316	-0.07	8.1621	-0.423	-191.412
4817	0	Extremo 1A	-0.028	-6.121	-0.196	8.6487	-0.1043	-149.025
4817	0.5	Extremo 1A	-0.028	9.504	-0.196	8.6487	-0.0062	-149.871
4817	1	Extremo 1A	-0.028	25.129	-0.196	8.6487	0.0919	-158.529
4817	0	Extremo 2A	0.499	-31.197	-2.201	19.4447	-1.6631	-182.089
4817	0.5	Extremo 2A	0.499	-15.572	-2.201	19.4447	-0.5627	-170.397
4817	1	Extremo 2A	0.499	0.053	-2.201	19.4447	0.5378	-166.517
4818	0	Extremo 1A	-0.076	-5.662	-0.175	43.5472	-0.0663	-156.425
4818	0.5	Extremo 1A	-0.076	9.963	-0.175	43.5472	0.0212	-157.5
4818	1	Extremo 1A	-0.076	25.588	-0.175	43.5472	0.1087	-166.387
4818	0	Extremo 2A	-0.518	-40.939	-5.557	50.0362	-2.2834	-179.641
4818	0.5	Extremo 2A	-0.518	-25.314	-5.557	50.0362	0.4953	-163.078
4818	1	Extremo 2A	-0.518	-9.689	-5.557	50.0362	3.2741	-154.327
4819	0	Extremo 1A	-0.108	-27.358	-0.049	56.9438	0.0166	-187.582
4819	0.5	Extremo 1A	-0.108	-11.733	-0.049	56.9438	0.041	-177.809
4819	1	Extremo 1A	-0.108	3.892	-0.049	56.9438	0.0654	-175.849
4819	0	Extremo 2A	-0.652	-40.347	2.784	68.2166	1.8168	-193.564
4819	0.5	Extremo 2A	-0.652	-24.722	2.784	68.2166	0.4249	-177.296
4819	1	Extremo 2A	-0.652	-9.097	2.784	68.2166	-0.9671	-168.841
4820	0	Extremo 1A	-0.104	-63.597	0.108	46.5806	0.0988	-183.161
4820	0.5	Extremo 1A	-0.104	-47.972	0.108	46.5806	0.0446	-155.269
4820	1	Extremo 1A	-0.104	-32.347	0.108	46.5806	-0.0096	-135.189
4820	0	Extremo 2A	-0.736	-84.815	-3.336	46.0241	-1.2238	-191.568
4820	0.5	Extremo 2A	-0.736	-69.19	-3.336	46.0241	0.4442	-153.067
4820	1	Extremo 2A	-0.736	-53.565	-3.336	46.0241	2.1122	-122.378
4821	0	Extremo 1A	0.034	38.891	-0.018	21.5872	-0.0413	-164.948
4821	0.5	Extremo 1A	0.034	54.516	-0.018	21.5872	-0.0323	-188.3
4821	1	Extremo 1A	0.034	70.141	-0.018	21.5872	-0.0233	-219.464
4821	0	Extremo 2A	0.174	39.037	0.923	48.6652	0.2448	-180.454
4821	0.5	Extremo 2A	0.174	54.662	0.923	48.6652	-0.2167	-203.879
4821	1	Extremo 2A	0.174	70.287	0.923	48.6652	-0.6783	-235.116
4822	0	Extremo 1A	0.018	-62.96	-0.153	-49.5458	-0.1098	-205.429
4822	0.5	Extremo 1A	0.018	-47.335	-0.153	-49.5458	-0.0332	-177.856
4822	1	Extremo 1A	0.018	-31.71	-0.153	-49.5458	0.0434	-158.094
4822	0	Extremo 2A	0.292	-73.136	0.168	-17.586	-0.5014	-236.902
4822	0.5	Extremo 2A	0.292	-57.511	0.168	-17.586	-0.5853	-204.24
4822	1	Extremo 2A	0.292	-41.886	0.168	-17.586	-0.6692	-179.391
4823	0	Extremo 1A	-0.031	-42.858	-0.262	-19.5515	-0.1414	-104.492
4823	0.5	Extremo 1A	-0.031	-27.233	-0.262	-19.5515	-0.0105	-86.9693
4823	1	Extremo 1A	-0.031	-11.608	-0.262	-19.5515	0.1204	-77.2591
4823	0	Extremo 2A	0.3	-74.524	-2.197	12.7957	-2.1272	-147.898
4823	0.5	Extremo 2A	0.3	-58.899	-2.197	12.7957	-1.0288	-114.542
4823	1	Extremo 2A	0.3	-43.274	-2.197	12.7957	0.0696	-88.999
4824	0	Extremo 1A	-0.097	54.316	-0.242	59.4578	-0.0937	-65.544
4824	0.5	Extremo 1A	-0.097	69.941	-0.242	59.4578	0.0271	-96.6082
4824	1	Extremo 1A	-0.097	85.566	-0.242	59.4578	0.1478	-135.485
4824	0	Extremo 2A	-0.275	-25.799	-10.694	90.6722	-4.4146	-107.337
4824	0.5	Extremo 2A	-0.275	-10.174	-10.694	90.6722	0.9325	-98.3438
4824	1	Extremo 2A	-0.275	5.451	-10.694	90.6722	6.2797	-97.1628
4825	0	Extremo 1A	-0.142	61.3	-0.073	90.7017	0.0179	-167.965
4825	0.5	Extremo 1A	-0.142	76.925	-0.073	90.7017	0.0545	-202.521
4825	1	Extremo 1A	-0.142	92.55	-0.073	90.7017	0.0912	-244.89
4825	0	Extremo 2A	-0.286	89.819	8.182	125.259	4.5342	-158.638
4825	0.5	Extremo 2A	-0.286	105.444	8.182	125.259	0.443	-207.454
4825	1	Extremo 2A	-0.286	121.069	8.182	125.259	-3.6482	-264.082
4826	0	Extremo 1A	-0.138	-73.559	0.136	26.9673	0.1283	-238.716
4826	0.5	Extremo 1A	-0.138	-57.934	0.136	26.9673	0.0603	-205.843
4826	1	Extremo 1A	-0.138	-42.309	0.136	26.9673	-0.0077	-180.782
4826	0	Extremo 2A	-0.321	-152.939	-9.154	45.6786	-4.2121	-284.646
4826	0.5	Extremo 2A	-0.321	-137.314	-9.154	45.6786	0.3648	-212.082
4826	1	Extremo 2A	-0.321	-121.689	-9.154	45.6786	4.9416	-147.331
4827	0	Extremo 1A	0.048	255.907	-0.01	71.6955	-0.0474	-171.967
4827	0.5	Extremo 1A	0.048	271.532	-0.01	71.6955	-0.0424	-303.826
4827	1	Extremo 1A	0.048	287.157	-0.01	71.6955	-0.0373	-443.498
4827	0	Extremo 2A	-0.174	252.816	0.923	109.758	0.2448	-184.82
4827	0.5	Extremo 2A	-0.174	268.441	0.923	109.758	-0.2168	-315.134
4827	1	Extremo 2A	-0.174	284.066	0.923	109.758	-0.6783	-453.261
4828	0	Extremo 1A	0.031	-364.353	-0.191	-125.037	-0.1417	-434.195
4828	0.5	Extremo 1A	0.031	-348.728	-0.191	-125.037	-0.0462	-255.925
4828	1	Extremo 1A	0.031	-333.103	-0.191	-125.037	0.0494	-85.4676
4828	0	Extremo 2A	-0.292	-369.678	0.168	-75.3525	-0.5015	-456.949
4828	0.5	Extremo 2A	-0.292	-354.053	0.168	-75.3525	-0.5853	-276.016
4828	1	Extremo 2A	-0.292	-338.428	0.168	-75.3525	-0.6692	-102.895
4829	0	Extremo 1A	-0.033	-158.117	-0.35	-57.3158	-0.1919	-34.7788
4829	0.5	Extremo 1A	-0.033	-142.492	-0.35	-57.3158	-0.0171	40.3736
4829	1	Extremo 1A	-0.033	-126.867	-0.35	-57.3158	0.1577	107.713
4829	0	Extremo 2A	-0.3	-183.367	-2.197	-0.5848	-2.1272	-69.803
4829	0.5	Extremo 2A	-0.3	-167.742	-2.197	-0.5848	-1.0288	17.9745
4829	1	Extremo 2A	-0.3	-152.117	-2.197	-0.5848	0.0697	97.9395
4830	0	Extremo 1A	-0.123	195.246	-0.334	60.1894	-0.1324	133.805
4830	0.5	Extremo 1A	-0.123	210.871	-0.334	60.1894	0.0347	32.2761
4830	1	Extremo 1A	-0.123	226.496	-0.334	60.1894	0.2017	-77.0658
4830	0	Extremo 2A	0.274	127.738	-10.694	123.53	-4.4146	100.531
4830	0.5	Extremo 2A	0.274	143.363	-10.694	123.53	0.9325	32.7555
4830	1	Extremo 2A	0.274	158.988	-10.694	123.53	6.2797	-42.8322
4831	0	Extremo 1A	-0.186	408.422	-0.107	135.303	0.0192	-78.5833
4831	0.5	Extremo 1A	-0.186	424.047	-0.107	135.303	0.0726	-286.701
4831	1	Extremo 1A	-0.186	439.672	-0.107	135.303	0.126	-502.63
4831	0	Extremo 2A	0.285	457.746	8.182	194.369	4.5343	-67.7737
4831	0.5	Extremo 2A	0.285	473.371	8.182	194.369	0.4431	-300.553
4831	1	Extremo 2A	0.285	488.996	8.182	194.369	-3.6482	-541.145
4832	0	Extremo 1A	-0.184	-254.192	0.168	-50.2912	0.1655	-462.631
4832	0.5	Extremo 1A	-0.184	-238.567	0.168	-50.2912	0.0815	-339.441
4832	1	Extremo 1A	-0.184	-222.942	0.168	-50.2912	-0.0026	-224.064
4832	0	Extremo 2A	0.32	-344.561	-9.154	-2.2796	-4.212	-523.651
4832	0.5	Extremo 2A	0.32	-328.936	-9.154	-2.2796	0.3648	-355.276
4832	1	Extremo 2A	0.32	-313.311	-9.154	-2.2796	4.9416	-194.714
4833	0	Extremo 1A	0.068	1133.8	0.00593	-27.0029	-0.0522	92.3813
4833	0.5	Extremo 1A	0.068	1149.43	0.00593	-27.0029	-0.0552	-478.427
4833	1	Extremo 1A	0.068	1165.05	0.00593	-27.0029	-0.0582	-1057.05
4833	0	Extremo 2A	-0.365	1118.48	0.739	20.506	0.1742	81.3944
4833	0.5	Extremo 2A	-0.365	1134.11	0.739	20.506	-0.1952	-481.752
4833	1	Extremo 2A	-0.365	1149.73	0.739	20.506	-0.5647	-1052.71
4834	0	Extremo 1A	0.05	-1316.6	-0.235	-31.142	-0.1817	-1052.06
4834	0.5	Extremo 1A	0.05	-1300.97	-0.235	-31.142	-0.0642	-397.666
4834	1	Extremo 1A	0.05	-1285.35	-0.235	-31.142	0.0533	248.914
4834	0	Extremo 2A	-0.57	-1307.86	-0.071	27.6205	-0.4933	-1054.4
4834	0.5	Extremo 2A	-0.57	-1292.24	-0.071	27.6205	-0.4581	-404.377
4834	1	Extremo 2A	-0.57	-1276.61	-0.071	27.6205	-0.4228	237.835
4835	0	Extremo 1A	-0.033	-276.995	-0.468	-32.2796	-0.2613	70.9665
4835	0.5	Extremo 1A	-0.033	-261.37	-0.468	-32.2796	-0.0274	205.558
4835	1	Extremo 1A	-0.033	-245.745	-0.468	-32.2796	0.2064	332.336
4835	0	Extremo 2A	-0.5	-287.435	-2.201	34.9438	-1.6632	57.6054
4835	0.5	Extremo 2A	-0.5	-271.81	-2.201	34.9438	-0.5626	197.416
4835	1	Extremo 2A	-0.5	-256.185	-2.201	34.9438	0.538	329.415
4836	0	Extremo 1A	-0.156	325.117	-0.464	-32.6234	-0.1874	370.101
4836	0.5	Extremo 1A	-0.156	340.742	-0.464	-32.6234	0.0448	203.637
4836	1	Extremo 1A	-0.156	356.367	-0.464	-32.6234	0.2769	29.3594
4836	0	Extremo 2A	0.518	318.986	-5.558	40.3429	-2.2834	369.612
4836	0.5	Extremo 2A	0.518	334.611	-5.558	40.3429	0.4954	206.213
4836	1	Extremo 2A	0.518	350.236	-5.558	40.3429	3.2742	35.0012
4837	0	Extremo 1A	-0.242	1442.06	-0.15	-32.2601	0.0213	290.183
4837	0.5	Extremo 1A	-0.242	1457.68	-0.15	-32.2601	0.0966	-434.753
4837	1	Extremo 1A	-0.242	1473.31	-0.15	-32.2601	0.1718	-1167.5
4837	0	Extremo 2A	0.652	1515.98	2.784	33.3723	1.8169	302.96

4837	0.5	Extremo 2A	0.652	1531.61	2.784	33.3723	0.4249	-458.937
4837	1	Extremo 2A	0.652	1547.23	2.784	33.3723	-0.9671	-1228.65
4838	0	Extremo 1A	-0.244	-1102.81	0.202	-29.7919	0.211	-1099.42
4838	0.5	Extremo 1A	-0.244	-1087.18	0.202	-29.7919	0.1099	-551.921
4838	1	Extremo 1A	-0.244	-1071.56	0.202	-29.7919	0.0087	-12.2353
4838	0	Extremo 2A	0.735	-1185.06	-3.336	36.8917	-1.2235	-1166
4838	0.5	Extremo 2A	0.735	-1169.43	-3.336	36.8917	0.4443	-577.38
4838	1	Extremo 2A	0.735	-1153.81	-3.336	36.8917	2.112	3.4296
4839	0	Extremo 1A	0.095	255.72	0.035	-125.206	-0.0537	-173.644
4839	0.5	Extremo 1A	0.095	271.345	0.035	-125.206	-0.0713	-305.411
4839	1	Extremo 1A	0.095	286.97	0.035	-125.206	-0.089	-444.99
4839	0	Extremo 2A	-0.341	251.658	0.503	-72.8357	0.085	-175.578
4839	0.5	Extremo 2A	-0.341	267.283	0.503	-72.8357	-0.1666	-305.313
4839	1	Extremo 2A	-0.341	282.908	0.503	-72.8357	-0.4183	-442.861
4840	0	Extremo 1A	0.08	-365.375	-0.283	63.1673	-0.231	-436.747
4840	0.5	Extremo 1A	0.08	-349.75	-0.283	63.1673	-0.0894	-257.965
4840	1	Extremo 1A	0.08	-334.125	-0.283	63.1673	0.0522	-86.9965
4840	0	Extremo 2A	-0.47	-363.515	-0.263	123.452	-0.4653	-435.913
4840	0.5	Extremo 2A	-0.47	-347.89	-0.263	123.452	-0.3339	-258.062
4840	1	Extremo 2A	-0.47	-332.265	-0.263	123.452	-0.2024	-88.0234
4841	0	Extremo 1A	-0.026	-159.653	-0.627	-6.9668	-0.3568	-37.0432
4841	0.5	Extremo 1A	-0.026	-144.028	-0.627	-6.9668	-0.0435	38.8771
4841	1	Extremo 1A	-0.026	-128.403	-0.627	-6.9668	0.2697	106.985
4841	0	Extremo 2A	-0.296	-158.377	-1.866	58.7145	-1.2441	-37.5416
4841	0.5	Extremo 2A	-0.296	-142.752	-1.866	58.7145	-0.3109	37.7406
4841	1	Extremo 2A	-0.296	-127.127	-1.866	58.7145	0.6222	105.21
4842	0	Extremo 1A	-0.196	193.696	-0.65	-125.236	-0.2665	132.583
4842	0.5	Extremo 1A	-0.196	209.321	-0.65	-125.236	0.0587	31.829
4842	1	Extremo 1A	-0.196	224.946	-0.65	-125.236	0.3839	-76.7379
4842	0	Extremo 2A	0.443	201.746	-3.218	-58.7197	-1.3363	134.046
4842	0.5	Extremo 2A	0.443	217.371	-3.218	-58.7197	0.2728	29.2664
4842	1	Extremo 2A	0.443	232.996	-3.218	-58.7197	1.8819	-83.3253
4843	0	Extremo 1A	-0.314	407.359	-0.201	-199.612	0.0277	-78.6917
4843	0.5	Extremo 1A	-0.314	422.984	-0.201	-199.612	0.1281	-286.277
4843	1	Extremo 1A	-0.314	438.609	-0.201	-199.612	0.2286	-501.675
4843	0	Extremo 2A	0.702	424.739	0.699	-137.262	0.7054	-85.1775
4843	0.5	Extremo 2A	0.702	440.364	0.699	-137.262	0.3561	-301.453
4843	1	Extremo 2A	0.702	455.989	0.699	-137.262	0.0068	-525.542
4844	0	Extremo 1A	-0.322	-254.451	0.23	-9.0636	0.2627	-462.224
4844	0.5	Extremo 1A	-0.322	-238.826	0.23	-9.0636	0.1476	-338.905
4844	1	Extremo 1A	-0.322	-223.201	0.23	-9.0636	0.0326	-223.398
4844	0	Extremo 2A	0.788	-271.495	-1.059	59.0741	-0.1268	-484.438
4844	0.5	Extremo 2A	0.788	-255.87	-1.059	59.0741	0.4028	-352.597
4844	1	Extremo 2A	0.788	-240.245	-1.059	59.0741	0.9325	-228.568
4845	0	Extremo 1A	0.133	38.463	0.086	-73.4738	-0.0481	-168.7
4845	0.5	Extremo 1A	0.133	54.088	0.086	-73.4738	-0.0911	-191.838
4845	1	Extremo 1A	0.133	69.713	0.086	-73.4738	-0.1342	-222.788
4845	0	Extremo 2A	-0.259	38.099	0.31	-21.8882	0.0163	-166.027
4845	0.5	Extremo 2A	-0.259	53.724	0.31	-21.8882	-0.1387	-188.983
4845	1	Extremo 2A	-0.259	69.349	0.31	-21.8882	-0.2938	-219.752
4846	0	Extremo 1A	0.127	-65.316	-0.33	-10.9375	-0.2898	-211.187
4846	0.5	Extremo 1A	0.127	-49.691	-0.33	-10.9375	-0.1246	-182.435
4846	1	Extremo 1A	0.127	-34.066	-0.33	-10.9375	0.0406	-161.496
4846	0	Extremo 2A	-0.318	-62.872	-0.345	49.0166	-0.4129	-206.253
4846	0.5	Extremo 2A	-0.318	-47.247	-0.345	49.0166	-0.2404	-178.723
4846	1	Extremo 2A	-0.318	-31.622	-0.345	49.0166	-0.068	-159.006
4847	0	Extremo 1A	-0.00763	-46.431	-0.839	-43.7791	-0.4887	-109.644
4847	0.5	Extremo 1A	-0.00763	-30.806	-0.839	-43.7791	-0.069	-90.3348
4847	1	Extremo 1A	-0.00763	-15.181	-0.839	-43.7791	0.3507	-78.8383
4847	0	Extremo 2A	-0.132	-41.091	-1.461	19.5477	-0.9127	-105.272
4847	0.5	Extremo 2A	-0.132	-25.466	-1.461	19.5477	-0.1822	-88.633
4847	1	Extremo 2A	-0.132	-9.841	-1.461	19.5477	0.5483	-79.8065
4848	0	Extremo 1A	-0.246	50.666	-0.924	-123.797	-0.3828	-68.351
4848	0.5	Extremo 1A	-0.246	66.291	-0.924	-123.797	0.0791	-97.5902
4848	1	Extremo 1A	-0.246	81.916	-0.924	-123.797	0.5411	-134.642
4848	0	Extremo 2A	0.362	58.154	-2.015	-59.6074	-0.8422	-67.485
4848	0.5	Extremo 2A	0.362	73.779	-2.015	-59.6074	0.1655	-100.468
4848	1	Extremo 2A	0.362	89.404	-2.015	-59.6074	1.1731	-141.264
4849	0	Extremo 1A	-0.405	58.754	-0.243	-154.282	0.048	-168.219
4849	0.5	Extremo 1A	-0.405	74.379	-0.243	-154.282	0.1693	-201.502
4849	1	Extremo 1A	-0.405	90.004	-0.243	-154.282	0.2906	-242.598
4849	0	Extremo 2A	0.615	63.575	-0.028	-90.3024	0.2686	-174.362
4849	0.5	Extremo 2A	0.615	79.2	-0.028	-90.3024	0.2828	-210.056
4849	1	Extremo 2A	0.615	94.825	-0.028	-90.3024	0.2969	-253.562
4850	0	Extremo 1A	-0.423	-74.169	0.229	-85.5444	0.3115	-237.752
4850	0.5	Extremo 1A	-0.423	-58.544	0.229	-85.5444	0.1969	-204.574
4850	1	Extremo 1A	-0.423	-42.919	0.229	-85.5444	0.0822	-179.208
4850	0	Extremo 2A	0.675	-76.237	-0.182	-23.9477	0.2378	-245.766
4850	0.5	Extremo 2A	0.675	-60.612	-0.182	-23.9477	0.3288	-211.554
4850	1	Extremo 2A	0.675	-44.987	-0.182	-23.9477	0.4197	-185.155
4851	0	Extremo 1A	0.186	16.909	0.17	-54.9125	-0.0297	-139.75
4851	0.5	Extremo 1A	0.186	32.534	0.17	-54.9125	-0.1145	-152.11
4851	1	Extremo 1A	0.186	48.159	0.17	-54.9125	-0.1994	-172.283
4851	0	Extremo 2A	-0.187	17.702	0.177	-6.3926	-0.0246	-133.452
4851	0.5	Extremo 2A	-0.187	33.327	0.177	-6.3926	-0.1129	-146.209
4851	1	Extremo 2A	-0.187	48.952	0.177	-6.3926	-0.2012	-166.779
4852	0	Extremo 1A	0.201	-1.341	-0.364	-50.9088	-0.3559	-165.592
4852	0.5	Extremo 1A	0.201	14.284	-0.364	-50.9088	-0.1736	-168.827
4852	1	Extremo 1A	0.201	29.909	-0.364	-50.9088	0.0086	-179.876
4852	0	Extremo 2A	-0.204	3.369	-0.352	6.3878	-0.3486	-155.693
4852	0.5	Extremo 2A	-0.204	18.994	-0.352	6.3878	-0.1727	-161.284
4852	1	Extremo 2A	-0.204	34.619	-0.352	6.3878	0.0031	-174.687
4853	0	Extremo 1A	0.035	-12.846	-1.121	-69.9423	-0.6712	-158.426
4853	0.5	Extremo 1A	0.035	2.779	-1.121	-69.9423	-0.1106	-155.909
4853	1	Extremo 1A	0.035	18.404	-1.121	-69.9423	0.45	-161.205
4853	0	Extremo 2A	-0.042	-4.915	-1.107	-8.9682	-0.6649	-149.847
4853	0.5	Extremo 2A	-0.042	10.71	-1.107	-8.9682	-0.1113	-151.296
4853	1	Extremo 2A	-0.042	26.335	-1.107	-8.9682	0.4424	-160.558
4854	0	Extremo 1A	-0.305	-12.66	-1.343	-106.299	-0.5599	-161.643
4854	0.5	Extremo 1A	-0.305	2.965	-1.343	-106.299	0.1117	-159.219
4854	1	Extremo 1A	-0.305	18.59	-1.343	-106.299	0.7833	-164.607
4854	0	Extremo 2A	0.295	-4.285	-1.335	-43.5993	-0.558	-158.563
4854	0.5	Extremo 2A	0.295	11.34	-1.335	-43.5993	0.1095	-160.327
4854	1	Extremo 2A	0.295	26.965	-1.335	-43.5993	0.7769	-169.903
4855	0	Extremo 1A	-0.513	-32.419	-0.228	-118.919	0.1079	-188.142
4855	0.5	Extremo 1A	-0.513	-16.794	-0.228	-118.919	0.2219	-175.839
4855	1	Extremo 1A	-0.513	-1.169	-0.228	-118.919	0.3359	-171.348
4855	0	Extremo 2A	0.501	-27.225	-0.23	-56.1087	0.1039	-191.278
4855	0.5	Extremo 2A	0.501	-11.6	-0.23	-56.1087	0.2189	-181.572
4855	1	Extremo 2A	0.501	4.025	-0.23	-56.1087	0.3339	-179.678
4856	0	Extremo 1A	-0.547	-64.78	0.144	-103.54	0.3308	-181.325
4856	0.5	Extremo 1A	-0.547	-49.155	0.144	-103.54	0.259	-152.841
4856	1	Extremo 1A	-0.547	-33.53	0.144	-103.54	0.1873	-132.17
4856	0	Extremo 2A	0.537	-64.128	0.132	-46.2251	0.322	-185.953
4856	0.5	Extremo 2A	0.537	-48.503	0.132	-46.2251	0.2562	-157.795
4856	1	Extremo 2A	0.537	-32.878	0.132	-46.2251	0.1904	-137.45
4857	0	Extremo 1A	0.259	21.749	0.301	-49.8675	0.0096	-131.528
4857	0.5	Extremo 1A	0.259	37.374	0.301	-49.8675	-0.141	-146.309
4857	1	Extremo 1A	0.259	52.999	0.301	-49.8675	-0.2915	-168.902
4857	0	Extremo 2A	-0.134	23.071	0.091	-6.8217	-0.0444	-121.026
4857	0.5	Extremo 2A	-0.134	38.696	0.091	-6.8217	-0.09	-136.468
4857	1	Extremo 2A	-0.134	54.321	0.091	-6.8217	-0.1356	-159.722
4858	0	Extremo 1A	0.314	5.185	-0.362	-61.7095	-0.4228	-171.426
4858	0.5	Extremo 1A	0.314	20.81	-0.362	-61.7095	-0.2418	-177.925
4858	1	Extremo 1A	0.314	36.435	-0.362	-61.7095	-0.0607	-192.236
4858	0	Extremo 2A	-0.13	12.884	-0.321	-9.5282	-0.2846	-154.655
4858	0.5	Extremo 2A	-0.13	28.509	-0.321	-9.5282	-0.124	-165.003
4858	1	Extremo 2A	-0.13	44.134	-0.321	-9.5282	0.0366	-183.163
4859	0	Extremo 1A	0.123	-15.264	-1.48	-75.6431	-0.9214	-191.536
4859	0.5	Extremo 1A	0.123	0.361	-1.48	-75.6431	-0.1814	-187.811
4859	1	Extremo 1A	0.123	15.986	-1.48	-75.6431	0.5586	-191.897
4859	0	Extremo 2A	0.00138	-2.839	-0.83	-18.5279	-0.4844	-176.326
4859	0.5	Extremo 2A	0.00138	12.786	-0.83	-18.5279	-0.0695	-178.813
4859	1	Extremo 2A	0.00138	28.411	-0.83	-18.5279	0.3453	-189.112
4860	0	Extremo 1A	-0.375	-37.132	-2.027	-91.3844	-0.845	-199.974
4860	0.5	Extremo 1A	-0.375	-21.507	-2.027	-91.3844	0.1685	-185.314
4860	1	Extremo 1A	-0.375	-5.882	-2.027	-91.3844	1.182	-178.466
4860	0	Extremo 2A	0.237	-24.116	-0.918	-31.7287	-0.3816	-192.384
4860	0.5	Extremo 2A	0.237	-8.491	-0.918	-31.7287	0.0775	-184.233
4860	1	Extremo 2A	0.237	7.134	-0.918	-31.7287	0.5366	-183.894
4861	0	Extremo 1A	-0.63	-58.073	-0.026	-97.1523	0.2738	-196.163
4861	0.5	Extremo 1A	-0.63	-42.448	-0.026	-97.1523	0.2868	-171.033
4861	1	Extremo 1A	-0.63	-26.823	-0.026	-97.1523	0.2999	-153.715
4861	0	Extremo 2A	0.395	-48.589	-0.244	-37.8921	0.045	-196.706

4861	0.5	Extremo 2A	0.395	-32.964	-0.244	-37.8921	0.1672	-176.317
4861	1	Extremo 2A	0.395	-17.339	-0.244	-37.8921	0.2893	-163.742
4862	0	Extremo 1A	-0.688	-73.5	-0.166	-95.7873	0.2497	-168.711
4862	0.5	Extremo 1A	-0.688	-57.875	-0.166	-95.7873	0.3326	-135.867
4862	1	Extremo 1A	-0.688	-42.25	-0.166	-95.7873	0.4156	-110.836
4862	0	Extremo 2A	0.415	-71.41	0.221	-42.4941	0.3053	-173.046
4862	0.5	Extremo 2A	0.415	-55.785	0.221	-42.4941	0.1949	-141.247
4862	1	Extremo 2A	0.415	-40.16	0.221	-42.4941	0.0846	-117.261
4863	0	Extremo 1A	0.341	24.577	0.492	-42.3218	0.0762	-135.54
4863	0.5	Extremo 1A	0.341	40.202	0.492	-42.3218	-0.1697	-151.735
4863	1	Extremo 1A	0.341	55.827	0.492	-42.3218	-0.4156	-175.742
4863	0	Extremo 2A	-0.096	26.093	0.039	-8.0809	-0.0512	-119.861
4863	0.5	Extremo 2A	-0.096	41.718	0.039	-8.0809	-0.0706	-136.814
4863	1	Extremo 2A	-0.096	57.343	0.039	-8.0809	-0.09	-161.579
4864	0	Extremo 1A	0.466	0.047	-0.286	-56.0244	-0.4786	-188.052
4864	0.5	Extremo 1A	0.466	15.672	-0.286	-56.0244	-0.3358	-191.982
4864	1	Extremo 1A	0.466	31.297	-0.286	-56.0244	-0.193	-203.724
4864	0	Extremo 2A	-0.083	11.702	-0.277	-12.7622	-0.2276	-161.688
4864	0.5	Extremo 2A	-0.083	27.327	-0.277	-12.7622	-0.089	-171.445
4864	1	Extremo 2A	-0.083	42.952	-0.277	-12.7622	0.0496	-189.015
4865	0	Extremo 1A	0.285	-27.607	-1.892	-67.6292	-1.256	-216.107
4865	0.5	Extremo 1A	0.285	-11.982	-1.892	-67.6292	-0.31	-206.21
4865	1	Extremo 1A	0.285	3.643	-1.892	-67.6292	0.636	-204.126
4865	0	Extremo 2A	0.021	-7.095	-0.62	-17.8376	-0.3539	-190.416
4865	0.5	Extremo 2A	0.021	8.53	-0.62	-17.8376	-0.0439	-190.775
4865	1	Extremo 2A	0.021	24.155	-0.62	-17.8376	0.2661	-198.947
4866	0	Extremo 1A	-0.459	-53.031	-3.235	-76.2857	-1.3406	-219.218
4866	0.5	Extremo 1A	-0.459	-37.406	-3.235	-76.2857	0.2768	-196.609
4866	1	Extremo 1A	-0.459	-21.781	-3.235	-76.2857	1.8941	-181.812
4866	0	Extremo 2A	0.189	-30.387	-0.647	-22.89	-0.2658	-204.75
4866	0.5	Extremo 2A	0.189	-14.762	-0.647	-22.89	0.0576	-193.463
4866	1	Extremo 2A	0.189	0.863	-0.647	-22.89	0.381	-189.988
4867	0	Extremo 1A	-0.721	-70.187	0.701	-77.7233	0.7121	-201.569
4867	0.5	Extremo 1A	-0.721	-54.562	0.701	-77.7233	0.3616	-170.382
4867	1	Extremo 1A	-0.721	-38.937	0.701	-77.7233	0.0112	-147.008
4867	0	Extremo 2A	0.306	-53.95	-0.202	-26.1129	0.0257	-199.528
4867	0.5	Extremo 2A	0.306	-38.325	-0.202	-26.1129	0.1267	-176.46
4867	1	Extremo 2A	0.306	-22.7	-0.202	-26.1129	0.2278	-161.204
4868	0	Extremo 1A	-0.804	-81.071	-1.038	-80.5079	-0.111	-166.471
4868	0.5	Extremo 1A	-0.804	-65.446	-1.038	-80.5079	0.4081	-129.841
4868	1	Extremo 1A	-0.804	-49.821	-1.038	-80.5079	0.9272	-101.025
4868	0	Extremo 2A	0.316	-75.256	0.224	-32.5442	0.2585	-170.491
4868	0.5	Extremo 2A	0.316	-59.631	0.224	-32.5442	0.1463	-136.77
4868	1	Extremo 2A	0.316	-44.006	0.224	-32.5442	0.0342	-110.86
4869	0	Extremo 1A	0.365	25.588	0.724	-28.1596	0.1628	-142.593
4869	0.5	Extremo 1A	0.365	41.213	0.724	-28.1596	-0.1994	-159.294
4869	1	Extremo 1A	0.365	56.838	0.724	-28.1596	-0.5616	-183.806
4869	0	Extremo 2A	-0.069	26.706	0.00797	-6.9458	-0.0508	-121.553
4869	0.5	Extremo 2A	-0.069	42.331	0.00797	-6.9458	-0.0548	-138.813
4869	1	Extremo 2A	-0.069	57.956	0.00797	-6.9458	-0.0588	-163.884
4870	0	Extremo 1A	0.565	-6.088	-0.1	-38.8541	-0.5109	-205.065
4870	0.5	Extremo 1A	0.565	9.537	-0.1	-38.8541	-0.4608	-205.927
4870	1	Extremo 1A	0.565	25.162	-0.1	-38.8541	-0.4107	-214.602
4870	0	Extremo 2A	-0.053	9.634	-0.232	-10.3797	-0.1797	-167.175
4870	0.5	Extremo 2A	-0.053	25.259	-0.232	-10.3797	-0.064	-175.899
4870	1	Extremo 2A	-0.053	40.884	-0.232	-10.3797	0.0518	-192.434
4871	0	Extremo 1A	0.487	-43.436	-2.236	-48.7288	-1.6794	-238.254
4871	0.5	Extremo 1A	0.487	-27.811	-2.236	-48.7288	-0.5616	-220.442
4871	1	Extremo 1A	0.487	-12.186	-2.236	-48.7288	0.5563	-210.442
4871	0	Extremo 2A	0.028	-10.408	-0.464	-12.9093	-0.2597	-197.263
4871	0.5	Extremo 2A	0.028	5.217	-0.464	-12.9093	-0.0276	-195.965
4871	1	Extremo 2A	0.028	20.842	-0.464	-12.9093	0.2044	-202.48
4872	0	Extremo 1A	-0.538	-76.503	-5.58	-56.224	-2.2896	-235.073
4872	0.5	Extremo 1A	-0.538	-60.878	-5.58	-56.224	0.5006	-200.727
4872	1	Extremo 1A	-0.538	-45.253	-5.58	-56.224	3.2908	-174.194
4872	0	Extremo 2A	0.149	-32.894	-0.462	-14.8245	-0.187	-209.485
4872	0.5	Extremo 2A	0.149	-17.269	-0.462	-14.8245	0.0441	-196.945
4872	1	Extremo 2A	0.149	-1.644	-0.462	-14.8245	0.2752	-192.216
4873	0	Extremo 1A	-0.675	-73.69	2.786	-51.2901	1.8252	-203.124
4873	0.5	Extremo 1A	-0.675	-58.065	2.786	-51.2901	0.4323	-170.185
4873	1	Extremo 1A	-0.675	-42.44	2.786	-51.2901	-0.9607	-145.059
4873	0	Extremo 2A	0.235	-55.599	-0.151	-16.4005	0.0201	-200.884
4873	0.5	Extremo 2A	0.235	-39.974	-0.151	-16.4005	0.0958	-176.991
4873	1	Extremo 2A	0.235	-24.349	-0.151	-16.4005	0.1714	-160.91
4874	0	Extremo 1A	-0.756	-98.305	-3.308	-61.4501	-1.2027	-173.378
4874	0.5	Extremo 1A	-0.756	-82.68	-3.308	-61.4501	0.4514	-128.131
4874	1	Extremo 1A	-0.756	-67.055	-3.308	-61.4501	2.1055	-90.6972
4874	0	Extremo 2A	0.238	-76.552	0.199	-21.6165	0.2086	-169.949
4874	0.5	Extremo 2A	0.238	-60.927	0.199	-21.6165	0.1091	-135.58
4874	1	Extremo 2A	0.238	-45.302	0.199	-21.6165	0.0097	-109.022
4875	0	Extremo 1A	0.175	26.386	0.905	-8.1996	0.2303	-147.415
4875	0.5	Extremo 1A	0.175	42.011	0.905	-8.1996	-0.2223	-164.515
4875	1	Extremo 1A	0.175	57.636	0.905	-8.1996	-0.6749	-189.426
4875	0	Extremo 2A	-0.049	26.59	-0.00948	-3.9853	-0.047	-122.928
4875	0.5	Extremo 2A	-0.049	42.215	-0.00948	-3.9853	-0.0422	-140.129
4875	1	Extremo 2A	-0.049	57.84	-0.00948	-3.9853	-0.0375	-165.142
4876	0	Extremo 1A	0.287	-9.041	0.129	-12.2261	-0.5245	-216.805
4876	0.5	Extremo 1A	0.287	6.584	0.129	-12.2261	-0.5891	-216.19
4876	1	Extremo 1A	0.287	22.209	0.129	-12.2261	-0.6538	-223.388
4876	0	Extremo 2A	-0.034	8.341	-0.19	-5.6214	-0.141	-169.909
4876	0.5	Extremo 2A	-0.034	23.966	-0.19	-5.6214	-0.0461	-177.986
4876	1	Extremo 2A	-0.034	39.591	-0.19	-5.6214	0.0489	-193.875
4877	0	Extremo 1A	0.284	-57.072	-2.243	-16.4567	-2.1491	-257.797
4877	0.5	Extremo 1A	0.284	-41.447	-2.243	-16.4567	-1.0277	-233.167
4877	1	Extremo 1A	0.284	-25.822	-2.243	-16.4567	0.0938	-216.35
4877	0	Extremo 2A	0.029	-12.129	-0.348	-6.3827	-0.1914	-199.965
4877	0.5	Extremo 2A	0.029	3.496	-0.348	-6.3827	-0.0172	-197.807
4877	1	Extremo 2A	0.029	19.121	-0.348	-6.3827	0.157	-203.461
4878	0	Extremo 1A	-0.3	-130.281	-10.726	-20.2373	-4.4238	-259.466
4878	0.5	Extremo 1A	-0.3	-114.656	-10.726	-20.2373	0.9393	-198.232
4878	1	Extremo 1A	-0.3	-99.031	-10.726	-20.2373	6.3023	-144.81
4878	0	Extremo 2A	0.117	-34.072	-0.333	-6.7227	-0.1322	-210.998
4878	0.5	Extremo 2A	0.117	-18.447	-0.333	-6.7227	0.0345	-197.868
4878	1	Extremo 2A	0.117	-2.822	-0.333	-6.7227	0.2012	-192.551
4879	0	Extremo 1A	-0.316	-39.276	8.183	-15.7934	4.5446	-186.659
4879	0.5	Extremo 1A	-0.316	-23.651	8.183	-15.7934	0.4529	-170.927
4879	1	Extremo 1A	-0.316	-8.026	8.183	-15.7934	-3.6389	-163.008
4879	0	Extremo 2A	0.179	-56.236	-0.107	-7.1713	0.0188	-201.162
4879	0.5	Extremo 2A	0.179	-40.611	-0.107	-7.1713	0.0724	-176.951
4879	1	Extremo 2A	0.179	-24.986	-0.107	-7.1713	0.1259	-160.551
4880	0	Extremo 1A	-0.347	-155.833	-9.118	-25.4415	-4.1847	-205.514
4880	0.5	Extremo 1A	-0.347	-140.208	-9.118	-25.4415	0.3744	-131.504
4880	1	Extremo 1A	-0.347	-124.583	-9.118	-25.4415	4.9335	-65.306
4880	0	Extremo 2A	0.178	-76.884	0.167	-10.5453	0.1648	-169.629
4880	0.5	Extremo 2A	0.178	-61.259	0.167	-10.5453	0.0812	-135.094
4880	1	Extremo 2A	0.178	-45.634	0.167	-10.5453	-0.0023	-108.371
4881	0	Extremo 1A	-0.171	26.21	0.901	14.0145	0.2266	-147.219
4881	0.5	Extremo 1A	-0.171	41.835	0.901	14.0145	-0.2242	-164.23
4881	1	Extremo 1A	-0.171	57.46	0.901	14.0145	-0.6749	-189.054
4881	0	Extremo 2A	-0.035	26.311	-0.019	-0.3035	-0.0418	-123.316
4881	0.5	Extremo 2A	-0.035	41.936	-0.019	-0.3035	-0.0324	-140.377
4881	1	Extremo 2A	-0.035	57.561	-0.019	-0.3035	-0.0231	-165.251
4882	0	Extremo 1A	-0.298	-9.132	0.118	18.5851	-0.5316	-216.296
4882	0.5	Extremo 1A	-0.298	6.493	0.118	18.5851	-0.5907	-215.637
4882	1	Extremo 1A	-0.298	22.118	0.118	18.5851	-0.6498	-222.79
4882	0	Extremo 2A	-0.021	7.854	-0.154	-0.1556	-0.1105	-170.205
4882	0.5	Extremo 2A	-0.021	23.479	-0.154	-0.1556	-0.0333	-178.038
4882	1	Extremo 2A	-0.021	39.104	-0.154	-0.1556	0.0439	-193.683
4883	0	Extremo 1A	-0.319	-57.059	-2.258	23.6503	-2.1568	-257.121
4883	0.5	Extremo 1A	-0.319	-41.434	-2.258	23.6503	-1.0278	-232.497
4883	1	Extremo 1A	-0.319	-25.809	-2.258	23.6503	0.1013	-215.686
4883	0	Extremo 2A	0.027	-12.651	-0.263	0.5953	-0.1419	-199.843
4883	0.5	Extremo 2A	0.027	2.974	-0.263	0.5953	-0.0104	-197.423
4883	1	Extremo 2A	0.027	18.599	-0.263	0.5953	0.121	-202.816
4884	0	Extremo 1A	0.242	-130.221	-10.738	28.1166	-4.428	-258.89
4884	0.5	Extremo 1A	0.242	-114.596	-10.738	28.1166	0.9412	-197.686
4884	1	Extremo 1A	0.242	-98.971	-10.738	28.1166	6.3103	-144.294
4884	0	Extremo 2A	0.091	-34.495	-0.242	1.5627	-0.0938	-210.48
4884	0.5	Extremo 2A	0.091	-18.87	-0.242	1.5627	0.0273	-197.138
4884	1	Extremo 2A	0.091	-3.245	-0.242	1.5627	0.1484	-191.609
4885	0	Extremo 1A	0.246	-39.155	8.181	23.065	4.5468	-186.33
4885	0.5	Extremo 1A	0.246	-23.53	8.181	23.065	0.4561	-170.659
4885	1	Extremo 1A	0.246	-7.905	8.181	23.065	-3.6346	-162.8
4885	0	Extremo 2A	0.135	-56.411	-0.073	2.1726	0.0183	-200.491

4885	0.5	Extremo 2A	0.135	-40.786	-0.073	2.1726	0.0548	-176.192
4885	1	Extremo 2A	0.135	-25.161	-0.073	2.1726	0.0913	-159.706
4886	0	Extremo 1A	0.286	-155.696	-9.108	25.5785	-4.1763	-205.402
4886	0.5	Extremo 1A	0.286	-140.071	-9.108	25.5785	0.3778	-131.46
4886	1	Extremo 1A	0.286	-124.446	-9.108	25.5785	4.9319	-65.3306
4886	0	Extremo 2A	0.133	-76.773	0.137	0.7306	0.1291	-169.127
4886	0.5	Extremo 2A	0.133	-61.148	0.137	0.7306	0.0605	-134.647
4886	1	Extremo 2A	0.133	-45.523	0.137	0.7306	-0.008	-107.979
4887	0	Extremo 1A	-0.36	24.896	0.713	33.7556	0.1514	-142.122
4887	0.5	Extremo 1A	-0.36	40.521	0.713	33.7556	-0.2051	-158.476
4887	1	Extremo 1A	-0.36	56.146	0.713	33.7556	-0.5617	-182.643
4887	0	Extremo 2A	-0.025	25.703	-0.023	3.1468	-0.0365	-123.028
4887	0.5	Extremo 2A	-0.025	41.328	-0.023	3.1468	-0.0249	-139.786
4887	1	Extremo 2A	-0.025	56.953	-0.023	3.1468	-0.0134	-164.356
4888	0	Extremo 1A	-0.575	-6.512	-0.134	44.9389	-0.5325	-203.527
4888	0.5	Extremo 1A	-0.575	9.113	-0.134	44.9389	-0.4656	-204.178
4888	1	Extremo 1A	-0.575	24.738	-0.134	44.9389	-0.3987	-212.641
4888	0	Extremo 2A	-0.013	7.881	-0.125	4.8067	-0.0868	-168.387
4888	0.5	Extremo 2A	-0.013	23.506	-0.125	4.8067	-0.0241	-176.234
4888	1	Extremo 2A	-0.013	39.131	-0.125	4.8067	0.0385	-191.893
4889	0	Extremo 1A	-0.522	-43.435	-2.282	55.8902	-1.703	-235.988
4889	0.5	Extremo 1A	-0.522	-27.81	-2.282	55.8902	-0.5618	-218.176
4889	1	Extremo 1A	-0.522	-12.185	-2.282	55.8902	0.5793	-208.178
4889	0	Extremo 2A	0.023	-12.273	-0.2	7.2439	-0.1059	-196.955
4889	0.5	Extremo 2A	0.023	3.352	-0.2	7.2439	-0.006	-194.725
4889	1	Extremo 2A	0.023	18.977	-0.2	7.2439	0.0939	-200.308
4890	0	Extremo 1A	0.477	-76.128	-5.618	64.4711	-2.3027	-233.094
4890	0.5	Extremo 1A	0.477	-60.503	-5.618	64.4711	0.5064	-198.937
4890	1	Extremo 1A	0.477	-44.878	-5.618	64.4711	3.3155	-172.592
4890	0	Extremo 2A	0.07	-34.228	-0.177	10.0985	-0.0667	-207.741
4890	0.5	Extremo 2A	0.07	-18.603	-0.177	10.0985	0.0219	-194.533
4890	1	Extremo 2A	0.07	-2.978	-0.177	10.0985	0.1104	-189.138
4891	0	Extremo 1A	0.601	-73.114	2.779	58.9206	1.8319	-202.168
4891	0.5	Extremo 1A	0.601	-57.489	2.779	58.9206	0.4422	-169.518
4891	1	Extremo 1A	0.601	-41.864	2.779	58.9206	-0.9475	-144.679
4891	0	Extremo 2A	0.101	-56.057	-0.048	12.0615	0.0177	-198.726
4891	0.5	Extremo 2A	0.101	-40.432	-0.048	12.0615	0.0418	-174.604
4891	1	Extremo 2A	0.101	-24.807	-0.048	12.0615	0.0658	-158.294
4892	0	Extremo 1A	0.69	-97.779	-3.278	61.6208	-1.1771	-173.183
4892	0.5	Extremo 1A	0.69	-82.154	-3.278	61.6208	0.4617	-128.199
4892	1	Extremo 1A	0.69	-66.529	-3.278	61.6208	2.1005	-91.0286
4892	0	Extremo 2A	0.098	-76.13	0.112	12.3798	0.1012	-168.382
4892	0.5	Extremo 2A	0.098	-60.505	0.112	12.3798	0.0453	-134.224
4892	1	Extremo 2A	0.098	-44.88	0.112	12.3798	-0.0106	-107.878
4893	0	Extremo 1A	-0.333	22.998	0.473	47.7747	0.0571	-135.222
4893	0.5	Extremo 1A	-0.333	38.623	0.473	47.7747	-0.1797	-150.628
4893	1	Extremo 1A	-0.333	54.248	0.473	47.7747	-0.4164	-173.846
4893	0	Extremo 2A	-0.018	24.044	-0.025	5.8326	-0.0316	-123.418
4893	0.5	Extremo 2A	-0.018	39.669	-0.025	5.8326	-0.0193	-139.346
4893	1	Extremo 2A	-0.018	55.294	-0.025	5.8326	-0.0069	-163.087
4894	0	Extremo 1A	-0.474	-1.495	-0.343	61.4246	-0.5159	-185.771
4894	0.5	Extremo 1A	-0.474	14.13	-0.343	61.4246	-0.3442	-188.93
4894	1	Extremo 1A	-0.474	29.755	-0.343	61.4246	-0.1725	-199.901
4894	0	Extremo 2A	-0.00774	7.531	-0.102	7.7286	-0.0687	-165.172
4894	0.5	Extremo 2A	-0.00774	23.156	-0.102	7.7286	-0.0176	-172.844
4894	1	Extremo 2A	-0.00774	38.781	-0.102	7.7286	0.0335	-188.328
4895	0	Extremo 1A	-0.322	-28.048	-1.974	74.5885	-1.2975	-211.559
4895	0.5	Extremo 1A	-0.322	-12.423	-1.974	74.5885	-0.3107	-201.441
4895	1	Extremo 1A	-0.322	3.202	-1.974	74.5885	0.6762	-199.136
4895	0	Extremo 2A	0.019	-11.614	-0.154	12.4116	-0.0799	-190.28
4895	0.5	Extremo 2A	0.019	4.011	-0.154	12.4116	-0.0031	-188.379
4895	1	Extremo 2A	0.019	19.636	-0.154	12.4116	0.0737	-194.291
4896	0	Extremo 1A	0.392	-51.306	-3.302	85.4819	-1.3642	-214.765
4896	0.5	Extremo 1A	0.392	-35.681	-3.302	85.4819	0.2869	-193.018
4896	1	Extremo 1A	0.392	-20.056	-3.302	85.4819	1.938	-179.084
4896	0	Extremo 2A	0.053	-32.597	-0.131	19.2498	-0.0476	-201.006
4896	0.5	Extremo 2A	0.053	-16.972	-0.131	19.2498	0.0177	-188.614
4896	1	Extremo 2A	0.053	-1.347	-0.131	19.2498	0.0831	-184.034
4897	0	Extremo 1A	0.637	-68.109	0.688	86.1814	0.7231	-200.176
4897	0.5	Extremo 1A	0.637	-52.484	0.688	86.1814	0.3791	-170.028
4897	1	Extremo 1A	0.637	-36.859	0.688	86.1814	0.0352	-147.693
4897	0	Extremo 2A	0.075	-54.194	-0.03	23.3061	0.017	-195.437
4897	0.5	Extremo 2A	0.075	-38.569	-0.03	23.3061	0.0322	-172.246
4897	1	Extremo 2A	0.075	-22.944	-0.03	23.3061	0.0474	-156.868
4898	0	Extremo 1A	0.729	-79.869	-0.986	80.2873	-0.0664	-166.921
4898	0.5	Extremo 1A	0.729	-64.244	-0.986	80.2873	0.4264	-130.893
4898	1	Extremo 1A	0.729	-48.619	-0.986	80.2873	0.9192	-102.677
4898	0	Extremo 2A	0.072	-74.324	0.091	24.3176	0.08	-167.841
4898	0.5	Extremo 2A	0.072	-58.699	0.091	24.3176	0.0343	-134.585
4898	1	Extremo 2A	0.072	-43.074	0.091	24.3176	-0.0115	-109.142
4899	0	Extremo 1A	-0.244	20.312	0.277	56.3805	-0.017	-131.672
4899	0.5	Extremo 1A	-0.244	35.937	0.277	56.3805	-0.1557	-145.734
4899	1	Extremo 1A	-0.244	51.562	0.277	56.3805	-0.2944	-167.609
4899	0	Extremo 2A	-0.012	21.307	-0.025	8.8527	-0.0275	-127.796
4899	0.5	Extremo 2A	-0.012	36.932	-0.025	8.8527	-0.015	-142.356
4899	1	Extremo 2A	-0.012	52.557	-0.025	8.8527	-0.0026	-164.728
4900	0	Extremo 1A	-0.315	-0.637	-0.446	65.7456	-0.4775	-170.506
4900	0.5	Extremo 1A	-0.315	14.988	-0.446	65.7456	-0.2546	-174.094
4900	1	Extremo 1A	-0.315	30.613	-0.446	65.7456	-0.0316	-185.495
4900	0	Extremo 2A	-0.00427	2.751	-0.084	5.6904	-0.0551	-164.377
4900	0.5	Extremo 2A	-0.00427	18.376	-0.084	5.6904	-0.0129	-169.658
4900	1	Extremo 2A	-0.00427	34.001	-0.084	5.6904	0.0293	-182.753
4901	0	Extremo 1A	-0.159	-18.312	-1.603	82.1258	-0.9844	-183.845
4901	0.5	Extremo 1A	-0.159	-2.687	-1.603	82.1258	-0.1827	-178.595
4901	1	Extremo 1A	-0.159	12.938	-1.603	82.1258	0.619	-181.158
4901	0	Extremo 2A	0.015	-13.878	-0.12	13.7865	-0.0613	-177.738
4901	0.5	Extremo 2A	0.015	1.747	-0.12	13.7865	-0.0012	-174.705
4901	1	Extremo 2A	0.015	17.372	-0.12	13.7865	0.0588	-179.484
4902	0	Extremo 1A	0.301	-30.477	-2.132	102.293	-0.8822	-190.026
4902	0.5	Extremo 1A	0.301	-14.852	-2.132	102.293	0.1837	-178.694
4902	1	Extremo 1A	0.301	0.773	-2.132	102.293	1.2496	-175.174
4902	0	Extremo 2A	0.039	-26.16	-0.098	30.0869	-0.0343	-184.657
4902	0.5	Extremo 2A	0.039	-10.535	-0.098	30.0869	0.0147	-175.483
4902	1	Extremo 2A	0.039	5.09	-0.098	30.0869	0.0638	-174.121
4903	0	Extremo 1A	0.532	-50.452	-0.05	107.139	0.2887	-194.727
4903	0.5	Extremo 1A	0.532	-34.827	-0.05	107.139	0.3136	-173.407
4903	1	Extremo 1A	0.532	-19.202	-0.05	107.139	0.3386	-159.9
4903	0	Extremo 2A	0.054	-46.12	-0.018	37.8638	0.0161	-189.703
4903	0.5	Extremo 2A	0.054	-30.495	-0.018	37.8638	0.0253	-170.549
4903	1	Extremo 2A	0.054	-14.87	-0.018	37.8638	0.0345	-159.208
4904	0	Extremo 1A	0.598	-72.522	-0.089	93.0324	0.316	-172.758
4904	0.5	Extremo 1A	0.598	-56.897	-0.089	93.0324	0.3607	-140.404
4904	1	Extremo 1A	0.598	-41.272	-0.089	93.0324	0.4054	-115.862
4904	0	Extremo 2A	0.051	-70.856	0.076	34.9164	0.0643	-170.312
4904	0.5	Extremo 2A	0.051	-55.231	0.076	34.9164	0.0264	-138.79
4904	1	Extremo 2A	0.051	-39.606	0.076	34.9164	-0.0115	-115.081
4905	0	Extremo 1A	-0.153	27.164	0.146	65.7006	-0.0616	-135.663
4905	0.5	Extremo 1A	-0.153	42.789	0.146	65.7006	-0.1348	-153.151
4905	1	Extremo 1A	-0.153	58.414	0.146	65.7006	-0.2079	-178.452
4905	0	Extremo 2A	-0.0069	28.795	-0.024	18.0948	-0.0239	-139.447
4905	0.5	Extremo 2A	-0.0069	44.42	-0.024	18.0948	-0.0119	-157.751
4905	1	Extremo 2A	-0.0069	60.045	-0.024	18.0948	3.1E-05	-183.867
4906	0	Extremo 1A	-0.182	-23.779	-0.475	53.4206	-0.4291	-174.237
4906	0.5	Extremo 1A	-0.182	-8.154	-0.475	53.4206	-0.1918	-166.254
4906	1	Extremo 1A	-0.182	7.471	-0.475	53.4206	0.0455	-166.083
4906	0	Extremo 2A	-0.00082	-25.03	-0.071	-7.0442	-0.045	-182.257
4906	0.5	Extremo 2A	-0.00082	-9.405	-0.071	-7.0442	-0.0096	-173.648
4906	1	Extremo 2A	-0.00082	6.22	-0.071	-7.0442	0.0258	-172.852
4907	0	Extremo 1A	-0.057	-23.898	-1.294	77.4269	-0.7594	-147.609
4907	0.5	Extremo 1A	-0.057	-8.273	-1.294	77.4269	-0.1126	-139.567
4907	1	Extremo 1A	-0.057	7.352	-1.294	77.4269	0.5342	-139.336
4907	0	Extremo 2A	0.013	-30.161	-0.096	8.2525	-0.0481	-156.531
4907	0.5	Extremo 2A	0.013	-14.536	-0.096	8.2525	0.00011	-145.357
4907	1	Extremo 2A	0.013	1.089	-0.096	8.2525	0.0483	-141.995
4908	0	Extremo 1A	0.231	6.882	-1.496	117.795	-0.6143	-140.585
4908	0.5	Extremo 1A	0.231	22.507	-1.496	117.795	0.1337	-147.932
4908	1	Extremo 1A	0.231	38.132	-1.496	117.795	0.8818	-163.092
4908	0	Extremo 2A	0.029	-3.884	-0.076	43.6471	-0.0252	-144.373
4908	0.5	Extremo 2A	0.029	11.741	-0.076	43.6471	0.0126	-146.337
4908	1	Extremo 2A	0.029	27.366	-0.076	43.6471	0.0505	-156.114
4909	0	Extremo 1A	0.402	-3.378	-0.27	130.786	0.1261	-184.868
4909	0.5	Extremo 1A	0.402	12.247	-0.27	130.786	0.2611	-187.085
4909	1	Extremo 1A	0.402	27.872	-0.27	130.786	0.3962	-197.115
4909	0	Extremo 2A	0.039	-11.63	-0.011	59.6506	0.0152	-177.651

4909	0.5	Extremo 2A	0.039	3.995	-0.011	59.6506	0.0206	-175.742
4909	1	Extremo 2A	0.039	19.62	-0.011	59.6506	0.026	-181.645
4910	0	Extremo 1A	0.44	-75.881	0.244	92.001	0.422	-200.419
4910	0.5	Extremo 1A	0.44	-60.256	0.244	92.001	0.3002	-166.385
4910	1	Extremo 1A	0.44	-44.631	0.244	92.001	0.1783	-140.163
4910	0	Extremo 2A	0.036	-73.626	0.064	37.1952	0.0529	-188.938
4910	0.5	Extremo 2A	0.036	-58.001	0.064	37.1952	0.021	-156.031
4910	1	Extremo 2A	0.036	-42.376	0.064	37.1952	-0.0109	-130.937
4911	0	Extremo 1A	-0.066	109.802	0.077	84.1272	-0.0811	-129.881
4911	0.5	Extremo 1A	-0.066	125.427	0.077	84.1272	-0.1193	-188.689
4911	1	Extremo 1A	-0.066	141.052	0.077	84.1272	-0.1576	-255.309
4911	0	Extremo 2A	-0.00063	114.188	-0.021	41.1654	-0.0205	-140.539
4911	0.5	Extremo 2A	-0.00063	129.813	-0.021	41.1654	-0.0098	-201.539
4911	1	Extremo 2A	-0.00063	145.438	-0.021	41.1654	0.00096	-270.351
4912	0	Extremo 1A	-0.059	-142.674	-0.458	23.0051	-0.3799	-247.782
4912	0.5	Extremo 1A	-0.059	-127.049	-0.458	23.0051	-0.1509	-180.351
4912	1	Extremo 1A	-0.059	-111.424	-0.458	23.0051	0.0781	-120.733
4912	0	Extremo 2A	0.00527	-147.99	-0.06	-32.9891	-0.0373	-270.359
4912	0.5	Extremo 2A	0.00527	-132.365	-0.06	-32.9891	-0.0073	-200.27
4912	1	Extremo 2A	0.00527	-116.74	-0.06	-32.9891	0.0226	-137.994
4913	0	Extremo 1A	0.036	-62.064	-1.061	64.1509	-0.6028	-97.3225
4913	0.5	Extremo 1A	0.036	-46.439	-1.061	64.1509	-0.0721	-70.1969
4913	1	Extremo 1A	0.036	-30.814	-1.061	64.1509	0.4587	-50.8839
4913	0	Extremo 2A	0.015	-78.177	-0.079	-0.3003	-0.0385	-122.422
4913	0.5	Extremo 2A	0.015	-62.552	-0.079	-0.3003	0.0012	-87.2402
4913	1	Extremo 2A	0.015	-46.927	-0.079	-0.3003	0.0408	-59.8707
4914	0	Extremo 1A	0.21	82.221	-1.133	123.95	-0.4546	-40.5735
4914	0.5	Extremo 1A	0.21	97.846	-1.133	123.95	0.112	-85.5903
4914	1	Extremo 1A	0.21	113.471	-1.133	123.95	0.6786	-138.42
4914	0	Extremo 2A	0.025	51.159	-0.061	53.4412	-0.0188	-58.2318
4914	0.5	Extremo 2A	0.025	66.784	-0.061	53.4412	0.0116	-87.7178
4914	1	Extremo 2A	0.025	82.409	-0.061	53.4412	0.042	-125.016
4915	0	Extremo 1A	0.315	162.681	-0.314	157.547	0.0716	-143.934
4915	0.5	Extremo 1A	0.315	178.306	-0.314	157.547	0.2286	-229.181
4915	1	Extremo 1A	0.315	193.931	-0.314	157.547	0.3857	-322.24
4915	0	Extremo 2A	0.03	123.753	-0.00693	87.5106	0.0145	-137.066
4915	0.5	Extremo 2A	0.03	139.378	-0.00693	87.5106	0.0179	-202.849
4915	1	Extremo 2A	0.03	155.003	-0.00693	87.5106	0.0214	-276.444
4916	0	Extremo 1A	0.321	-158.918	0.343	61.9369	0.4309	-306.931
4916	0.5	Extremo 1A	0.321	-143.293	0.343	61.9369	0.2592	-231.378
4916	1	Extremo 1A	0.321	-127.668	0.343	61.9369	0.0875	-163.638
4916	0	Extremo 2A	0.027	-140.929	0.054	18.2694	0.0449	-271.627
4916	0.5	Extremo 2A	0.027	-125.304	0.054	18.2694	0.0179	-205.068
4916	1	Extremo 2A	0.027	-109.679	0.054	18.2694	-0.0091	-146.323
4917	0	Extremo 1A	-0.031	454.093	0.06	41.46	-0.0886	-16.5243
4917	0.5	Extremo 1A	-0.031	469.718	0.06	41.46	-0.1184	-247.477
4917	1	Extremo 1A	-0.031	485.343	0.06	41.46	-0.1483	-486.242
4917	0	Extremo 2A	0.00532	464.079	-0.016	4.9838	-0.017	-33.2216
4917	0.5	Extremo 2A	0.00532	479.704	-0.016	4.9838	-0.0089	-269.168
4917	1	Extremo 2A	0.00532	495.329	-0.016	4.9838	-0.0008	-512.926
4918	0	Extremo 1A	0.033	-518.706	-0.393	56.382	-0.332	-474.331
4918	0.5	Extremo 1A	0.033	-503.081	-0.393	56.382	-0.1357	-218.884
4918	1	Extremo 1A	0.033	-487.456	-0.393	56.382	0.0607	28.7502
4918	0	Extremo 2A	0.015	-533.44	-0.048	8.4128	-0.0304	-513.674
4918	0.5	Extremo 2A	0.015	-517.815	-0.048	8.4128	-0.0062	-250.86
4918	1	Extremo 2A	0.015	-502.19	-0.048	8.4128	0.018	4.1413
4919	0	Extremo 1A	0.173	-101.533	-0.86	71.5443	-0.4816	-27.5337
4919	0.5	Extremo 1A	0.173	-85.908	-0.86	71.5443	-0.0516	19.3266
4919	1	Extremo 1A	0.173	-70.283	-0.86	71.5443	0.3784	58.3743
4919	0	Extremo 2A	0.028	-127.421	-0.064	17.0602	-0.0301	-67.4933
4919	0.5	Extremo 2A	0.028	-111.796	-0.064	17.0602	0.0022	-7.689
4919	1	Extremo 2A	0.028	-96.171	-0.064	17.0602	0.0344	44.3028
4920	0	Extremo 1A	0.347	160.701	-0.891	85.9141	-0.3332	85.3538
4920	0.5	Extremo 1A	0.347	176.326	-0.891	85.9141	0.1123	1.0971
4920	1	Extremo 1A	0.347	191.951	-0.891	85.9141	0.5579	-90.9721
4920	0	Extremo 2A	0.039	109.386	-0.049	30.1528	-0.0126	50.5606
4920	0.5	Extremo 2A	0.039	125.011	-0.049	30.1528	0.0122	-8.0386
4920	1	Extremo 2A	0.039	140.636	-0.049	30.1528	0.0369	-74.4503
4921	0	Extremo 1A	0.442	654.315	-0.303	86.8526	0.0774	27.7511
4921	0.5	Extremo 1A	0.442	669.94	-0.303	86.8526	0.2287	-303.313
4921	1	Extremo 1A	0.442	685.565	-0.303	86.8526	0.3801	-642.189
4921	0	Extremo 2A	0.043	528.005	-0.00611	36.3519	0.015	12.0037
4921	0.5	Extremo 2A	0.043	543.63	-0.00611	36.3519	0.0181	-255.905
4921	1	Extremo 2A	0.043	559.255	-0.00611	36.3519	0.0211	-531.626
4922	0	Extremo 1A	0.406	-549.065	0.322	74.6009	0.4162	-607.055
4922	0.5	Extremo 1A	0.406	-533.44	0.322	74.6009	0.2552	-336.429
4922	1	Extremo 1A	0.406	-517.815	0.322	74.6009	0.0942	-73.6151
4922	0	Extremo 2A	0.035	-461.821	0.043	36.3311	0.039	-513.565
4922	0.5	Extremo 2A	0.035	-446.196	0.043	36.3311	0.0177	-286.561
4922	1	Extremo 2A	0.035	-430.571	0.043	36.3311	-0.0037	-67.3685
4923	0	Extremo 1A	-0.416	124.935	0.065	-3.297	-0.1166	-108.559
4923	0.5	Extremo 1A	-0.416	140.56	0.065	-3.297	-0.1493	-174.933
4923	1	Extremo 1A	-0.416	156.185	0.065	-3.297	-0.1819	-249.119
4923	0	Extremo 2A	-0.013	114.181	-0.00852	-34.3834	-0.015	-143.843
4923	0.5	Extremo 2A	-0.013	129.806	-0.00852	-34.3834	-0.0107	-204.84
4923	1	Extremo 2A	-0.013	145.431	-0.00852	-34.3834	-0.0065	-273.649
4924	0	Extremo 1A	-0.263	-116.383	-0.257	95.9947	-0.2923	-206.787
4924	0.5	Extremo 1A	-0.263	-100.758	-0.257	95.9947	-0.1637	-152.502
4924	1	Extremo 1A	-0.263	-85.133	-0.257	95.9947	-0.0352	-106.029
4924	0	Extremo 2A	0.013	-156.502	-0.032	53.9074	-0.0236	-266.739
4924	0.5	Extremo 2A	0.013	-140.877	-0.032	53.9074	-0.0075	-192.394
4924	1	Extremo 2A	0.013	-125.252	-0.032	53.9074	0.0086	-125.862
4925	0	Extremo 1A	0.254	-10.415	-0.595	82.5862	-0.3556	-20.5487
4925	0.5	Extremo 1A	0.254	5.21	-0.595	82.5862	-0.0579	-19.2476
4925	1	Extremo 1A	0.254	20.835	-0.595	82.5862	0.2398	-25.7589
4925	0	Extremo 2A	0.059	-73.765	-0.045	35.4796	-0.0196	-80.9483
4925	0.5	Extremo 2A	0.059	-58.14	-0.045	35.4796	0.0028	-47.9722
4925	1	Extremo 2A	0.059	-42.515	-0.045	35.4796	0.0251	-22.8087
4926	0	Extremo 1A	0.95	168.202	-0.625	49.8405	-0.1765	34.6481
4926	0.5	Extremo 1A	0.95	183.827	-0.625	49.8405	0.1359	-53.3594
4926	1	Extremo 1A	0.95	199.452	-0.625	49.8405	0.4484	-149.179
4926	0	Extremo 2A	0.105	87.505	-0.035	6.1235	-0.0026	-4.0795
4926	0.5	Extremo 2A	0.105	103.13	-0.035	6.1235	0.0149	-51.7382
4926	1	Extremo 2A	0.105	118.755	-0.035	6.1235	0.0324	-107.209
4927	0	Extremo 1A	1.431	241.542	-0.236	14.2359	0.1632	-124.169
4927	0.5	Extremo 1A	1.431	257.167	-0.236	14.2359	0.2814	-248.846
4927	1	Extremo 1A	1.431	272.792	-0.236	14.2359	0.3995	-381.336
4927	0	Extremo 2A	0.127	165.902	-0.00579	-18.7644	0.0193	-116.885
4927	0.5	Extremo 2A	0.127	181.527	-0.00579	-18.7644	0.0222	-203.742
4927	1	Extremo 2A	0.127	197.152	-0.00579	-18.7644	0.0251	-298.412
4928	0	Extremo 1A	1.409	-132.99	0.205	90.8486	0.4184	-320.922
4928	0.5	Extremo 1A	1.409	-117.365	0.205	90.8486	0.3157	-258.334
4928	1	Extremo 1A	1.409	-101.74	0.205	90.8486	0.213	-203.558
4928	0	Extremo 2A	0.112	-124.6	0.027	56.0027	0.0352	-274.181
4928	0.5	Extremo 2A	0.112	-108.975	0.027	56.0027	0.0219	-215.788
4928	1	Extremo 2A	0.112	-93.35	0.027	56.0027	0.0086	-165.206

ANEJO Nº 10

REPLANTEO

ÍNDICE

Página

1. INTRODUCCIÓN 5

2. BASES DE REPLANTEO 5

2.1. CRITERIO DE SELECCIÓN 5
2.2. BREVE DESCRIPCIÓN DE LAS BASES 5
2.3. COORDENADAS 6

3. COORDENADAS DE LOS PUNTOS SINGULARES 6

3.1. CIMENTACIONES 6
3.1.1. PILOTES 6
3.1.1.1. PILOTES DE LOS ENCEPADOS DE LAS PILAS 6
3.1.1.2. PILOTES DEL ENCEPADO DEL ESTRIBO 2 7
3.1.2. ZAPATAS 7
3.1.2.1. ENCEPADOS DE LAS PILAS 7
3.1.2.2. ZAPATAS DEL ARCO 8
3.1.2.3. ENCEPADO DEL ESTRIBO 2 9
3.2. PILAS 9
3.2.1. PILAS SOBRE EL ARCO 10
3.2.2. PILAS SOBRE ENCEPADOS 10
3.3. ARCO 11
3.4. ESTRIBOS 15
3.4.1. ESTRIBO 1 15
3.4.2. ESTRIBO 2 16
3.5. TABLERO 17

1. INTRODUCCIÓN

En el presente anejo se dispondrán los datos necesarios para la correcta materialización de la obra en el terreno, con una precisión adecuada. Para ello, al igual que se realizó en el levantamiento topográfico, se utilizara el sistema de referencia UTM, estando todas las coordenadas de los puntos dentro de la pagina 16-P.

En primer lugar se detalla la ubicación de las bases de replanteo, imprescindibles para ubicar en el terreno los puntos singulares. A continuación y de acuerdo con el proceso constructivo, se detallaran las coordenadas de la ubicación de pilotes, encepados, zapatas, arco, estribos y pilas. Por último se muestran las coordenadas de las secciones más representativas del tablero.

Todos los datos reflejados en este anejo se tomaran especialmente en cuenta en el montaje de cimbras, encofrados, así como para la colocación de pilotes.

2. BASES DE REPLANTEO

2.1. CRITERIO DE SELECCIÓN

En función del levantamiento topográfico, se tomaron unos puntos inamovibles, tanto en el terreno, como en obras de hormigón cercanas. También fue importante para la selección de las bases, que desde ellas se viese toda la obra desde diferentes ángulos.

2.2. BREVE DESCRIPCIÓN DE LAS BASES

Como se ha mencionado, algunas de las bases son puntos singulares de estructuras de hormigón ya existentes, sin embargo otras, son puntos del terreno, en los que se clavaron pines (varillas de acero corrugado), a fin de consolidarlo posteriormente con un pequeño mojón de concreto.

- **B1**: Punto situado en el estribo izquierdo (San Dionisio) del puente derribado por el huracán Mitch.
- **B2**: Punto situado en un orificio de una roca de la margen derecha del río, cercana al sondeo Nº3.
- **B3, B4, B5, B6 Y B7**: Puntos del actual puente vado.
- **B8**: Punto del terreno en la margen izquierda.

Los puntos B2 y B8 quedaron pendientes de afianzar con concreto.

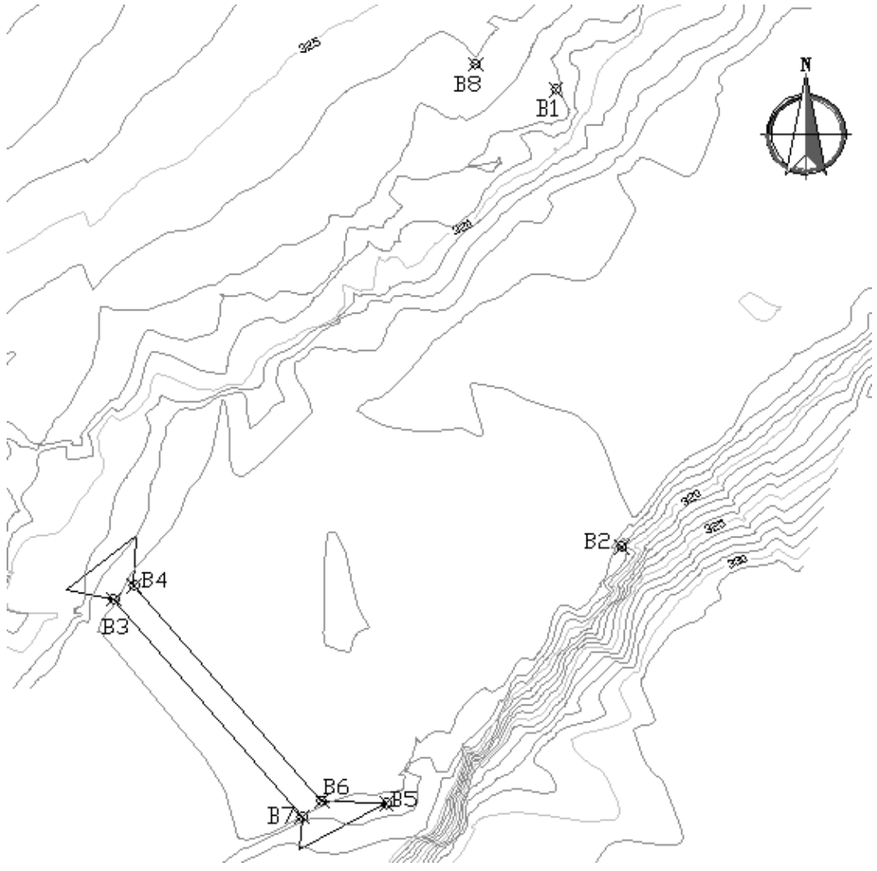

2.3. COORDENADAS

En la siguiente tabla se muestran las coordenadas de las bases de replanteo:

BASE	X UTM	Y UTM	Z (msnm)
B1	628680.477	1405973.945	324.057
B2	628694.105	1405879.560	318.480
B3	628589.115	1405868.665	319.050
B4	628593.299	1405871.529	319.050
B5	628645.471	1405826.500	319.060
B6	628632.091	1405827.068	319.050
B7	628627.991	1405823.756	319.050
B8	628663.836	1405979.116	323.900

3. COORDENADAS DE LOS PUNTOS SINGULARES

La numeración que se ha asignado a cada una de los encepados, zapatas y las pilas, están reflejadas en los planos de definición general.

3.1. CIMENTACIONES

Para el replanteo de las cimentaciones de los pilotes y zapatas se seguirá el orden descrito en la siguiente figura.

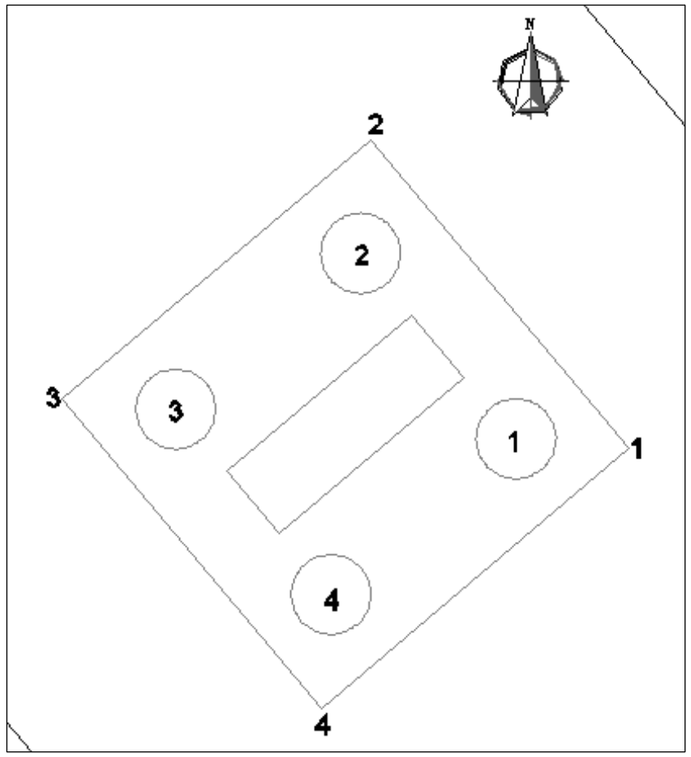

La denominación de cada punto singular, constará de dos números, el primero de ellos corresponde a la cimentación en la que se encuentra ubicada (ver planos de definición general), y el segundo de ellos se refiere al punto concreto dentro de la cimentación.

3.1.1. PILOTES

Para el replanteo de los pilotes se hará una división entre los pilotes situados bajo los encepados de las pilas y los pilotes situados bajo el estribo 2.

3.1.1.1. PILOTES DE LOS ENCEPADOS DE LAS PILAS

El replanteo de los pilotes se realizará mediante el punto central de cada uno de ellos, cuyas coordenadas se muestran a continuación. La numeración que siguen es la descrita anteriormente en el apartado “cimentaciones”:

PILOTE	X UTM	Y UTM	Z msnm
7-1	628639.972	1405949.252	320.600
7-2	628638.042	1405951.549	320.600
7-3	628635.746	1405949.618	320.600
7-4	628637.676	1405947.322	320.600
8-1	628630.321	1405960.735	320.600
8-2	628628.391	1405963.031	320.600
8-3	628626.094	1405961.101	320.600
8-4	628628.024	1405958.804	320.600
9-1	628620.669	1405972.217	320.600
9-2	628618.739	1405974.514	320.600
9-3	628616.443	1405972.584	320.600
9-4	628618.373	1405970.287	320.600
10-1	628611.018	1405983.700	320.600
10-2	628609.088	1405985.996	320.600
10-3	628606.791	1405984.066	320.600
10-4	628608.721	1405981.770	320.600
11-1	628601.366	1405995.182	320.600
11-2	628599.436	1405997.479	320.600
11-3	628597.140	1405995.549	320.600
11-4	628599.070	1405993.252	320.600

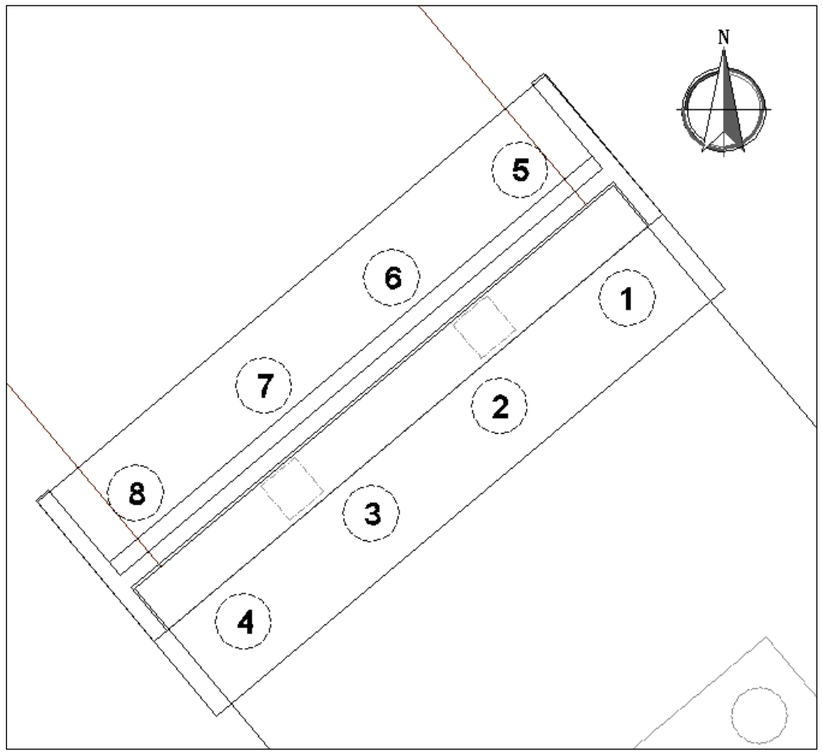

3.1.1.2. PILOTES DEL ENCEPADO DEL ESTRIBO 2

Para la denominación de los puntos centrales de los pilotes que se encuentran bajo el estribo 2, se utilizará el criterio de la siguiente figura. A continuación se muestran las coordenadas de cada uno de éstos pilotes, con la cota Z correspondiente a su cara superior:

PILOTE	X UTM	Y UTM	Z msnm
1	628597.068	1406004.959	325.500
2	628594.771	1406003.029	325.500
3	628592.475	1406001.098	325.500
4	628590.178	1405999.168	325.500
5	628595.137	1406007.256	325.500
6	628592.841	1406005.325	325.500
7	628590.544	1406003.395	325.500
8	628588.248	1406001.465	325.500

3.1.2. ZAPATAS

3.1.2.1. ENCEPADOS DE LAS PILAS

Como es obvio, la cota inferior de los encepados será la misma que la superior del pilote (320.600 msnm).

La siguiente tabla muestra las coordenadas de las cuatro esquinas superiores de cada una de los encepados que se encuentran bajo pilas:

PUNTO ZAPATA	X UTM	Y UTM	Z msnm
7-1	628641.381	1405949.130	322.350
7-2	628638.164	1405952.958	322.350
7-3	628634.337	1405949.741	322.350
7-4	628637.554	1405945.913	322.350
8-1	628631.730	1405960.613	322.350
8-2	628628.513	1405964.440	322.350
8-3	628624.685	1405961.223	322.350
8-4	628627.902	1405957.396	322.350
9-1	628622.078	1405972.095	322.350
9-2	628618.861	1405975.923	322.350
9-3	628615.034	1405972.706	322.350
9-4	628618.251	1405968.878	322.350
10-1	628612.427	1405983.578	322.350
10-2	628609.210	1405987.405	322.350
10-3	628605.382	1405984.188	322.350
10-4	628608.599	1405980.361	322.350
11-1	628602.775	1405995.060	322.350
11-2	628599.558	1405998.888	322.350
11-3	628595.731	1405995.671	322.350
11-4	628598.948	1405991.843	322.350

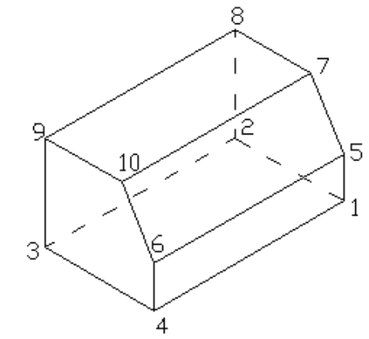

ZAPATA PILA 6

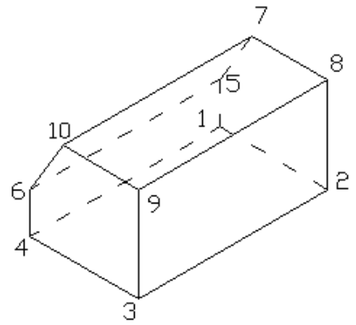

ZAPATA ESTRIBO 1

3.1.2.2. ZAPATAS DEL ARCO

En la siguiente figura, se describe la denominación que se utilizará para cada uno de los puntos singulares de las zapatas que se encuentran bajo el arco:

A continuación se muestra cada una de las coordenadas de dichos puntos singulares:

ZAPATA ESTRIBO 1	X UTM	Y UTM	Z msnm
1	628706.872	1405872.769	312.786
2	628710.089	1405868.941	312.786
3	628704.731	1405864.437	312.786
4	628709.446	1405869.707	312.786
5	628706.872	1405872.769	314.786
6	628709.446	1405869.707	314.786
7	628707.644	1405871.850	316.784
8	628710.089	1405868.941	316.784
9	628704.731	1405864.437	316.784
10	628702.286	1405867.346	316.784

ZAPATA PILA 6	X UTM	Y UTM	Z msnm
1	628651.416	1405938.746	312.786
2	628648.202	1405942.573	312.786
3	628642.844	1405938.069	312.786
4	628646.058	1405934.242	312.786
5	628651.416	1405938.746	314.786
6	628646.058	1405934.242	314.786
7	628650.644	1405939.664	316.784
8	628648.202	1405942.573	316.784
9	628642.844	1405938.069	316.784
10	628645.286	1405935.160	316.784

3.1.2.3. ENCEPADO DEL ESTRIBO 2

La cota inferior del encepado del estribo 2, será la misma que la superior de sus pilotes (325.500 msnm), por lo que en la tabla se reflejan las cotas de las cuatro esquinas superiores del encepado según muestra la siguiente figura:

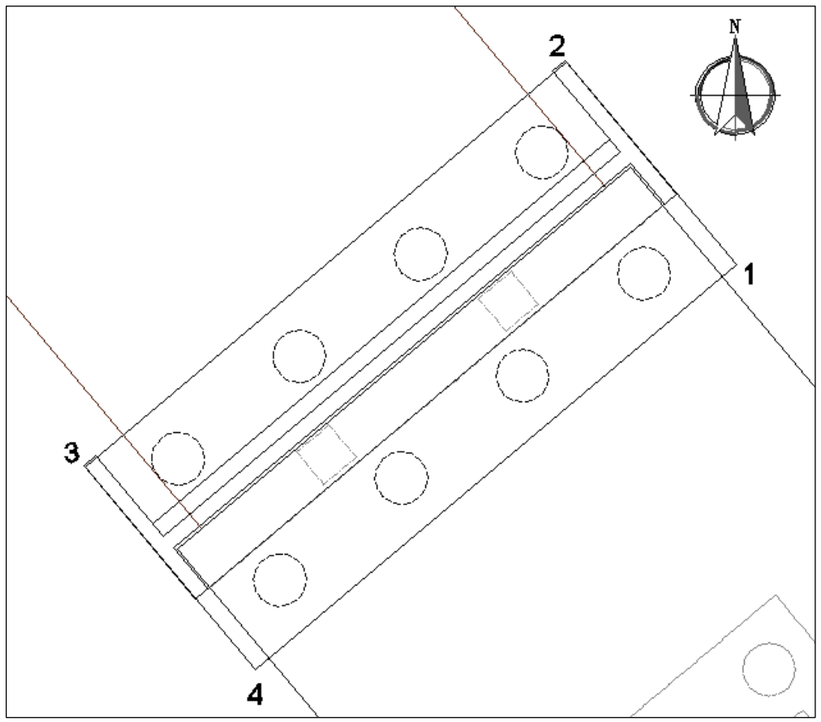

En la tabla se muestran las coordenadas de dichos puntos singulares:

PUNTO ZAPATA	X UTM	Y UTM	Z msnm
1	628598.821	1406005.127	327.250
2	628595.604	1406008.954	327.250
3	628586.494	1406001.297	327.250
4	628589.712	1405997.470	327.250

3.2. PILAS

La denominación de los puntos singulares de cada pila, se hará de la misma forma que los pilotes y los encepados como se muestra en la siguiente figura:

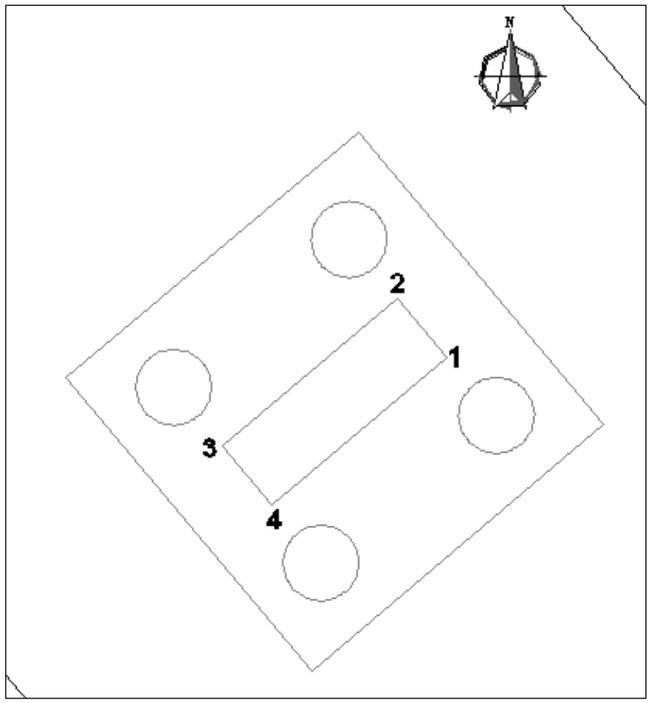

3.2.1. PILAS SOBRE EL ARCO

En el caso de las pilas que se encuentran sobre el arco, la cota de las esquinas superiores serán para todas la misma (328.350 msnm), por lo que la cota que se mostrará en la siguiente tabla será la de las esquinas inferiores (diferentes en cada una de ellas):

PUNTO PILA ARCO	X UTM	Y UTM	Z (msnm)
1-1	628697.238	1405881.123	322.229
1-2	628696.594	1405881.888	322.579
1-3	628694.298	1405879.958	322.579
1-4	628694.941	1405879.192	322.229
2-1	628687.586	1405892.605	326.168
2-2	628686.943	1405893.371	326.336
2-3	628684.646	1405891.440	326.336
2-4	628685.290	1405890.675	326.168
3-1	628677.935	1405904.088	327.499
3-2	628677.291	1405904.853	327.499
3-3	628674.995	1405902.923	327.499
3-4	628675.638	1405902.157	327.499
4-1	628668.283	1405915.570	326.336
4-2	628667.640	1405916.336	326.168
4-3	628665.343	1405914.405	326.168
4-4	628665.987	1405913.640	326.336
5-1	628658.632	1405927.053	322.579
5-2	628657.988	1405927.818	322.229
5-3	628655.692	1405925.888	322.229
5-4	628656.335	1405925.122	322.579
6-1	628648.980	1405938.535	316.785
6-2	628648.337	1405939.301	316.785
6-3	628646.040	1405937.370	316.785
6-4	628646.684	1405936.605	316.785

3.2.2. PILAS SOBRE ENCEPADOS

Al igual que en las pilas sobre el arco, la cota superior del resto de pilas será 328.350 msnm, por lo que en la siguiente tabla la cota que se muestra será la de las esquinas inferiores de cada pila:

PUNTO PILA	X UTM	Y UTM	Z msnm
7-1	628639.329	1405950.018	322.350
7-2	628638.685	1405950.783	322.350
7-3	628636.389	1405948.853	322.350
7-4	628637.032	1405948.087	322.350
8-1	628629.677	1405961.500	322.350
8-2	628629.034	1405962.266	322.350
8-3	628626.737	1405960.335	322.350
8-4	628627.381	1405959.570	322.350
9-1	628620.026	1405972.983	322.350
9-2	628619.382	1405973.748	322.350
9-3	628617.086	1405971.818	322.350
9-4	628617.729	1405971.052	322.350
10-1	628610.374	1405984.465	322.350
10-2	628609.731	1405985.231	322.350
10-3	628607.434	1405983.301	322.350
10-4	628608.078	1405982.535	322.350
11-1	628600.723	1405995.948	322.350
11-2	628600.079	1405996.713	322.350
11-3	628597.783	1405994.783	322.350
11-4	628598.426	1405994.018	322.350

3.3. ARCO

Para el replanteo del arco se tomarán secciones de este cada 3m, describiéndose, al ser de anchura variable, los cuatros puntos de las esquinas correspondientes a cada sección. Además de estas secciones verticales, se tomarán otras dos secciones, que corresponden al contacto entre el arco y las zapatas.

Para la numeración de las esquinas de cada sección se seguirá el criterio de la figura, de modo que cada punto que se encuentre en una misma arista de las cuatro del arco, tendrán la misma numeración.

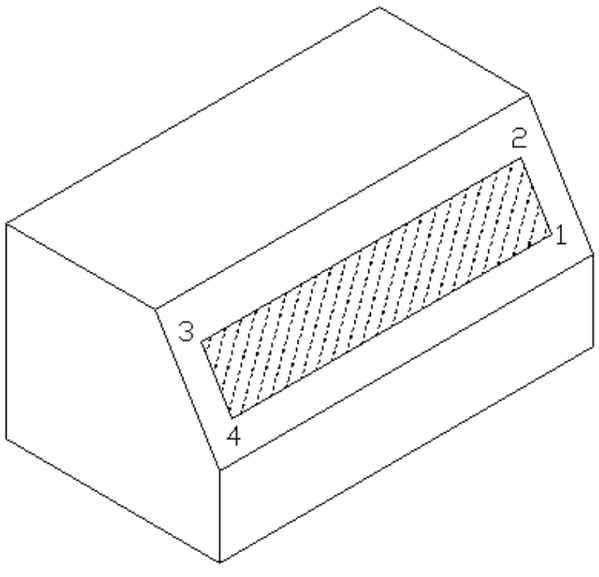

CONTACTO
ARCO-ZAPATA PILA 6

En la siguiente figura se muestran los perfiles tomados, cada 3 metros, necesarios para el replanteo del arco, así como la ubicación de los contactos entre el arco y sus zapatas.

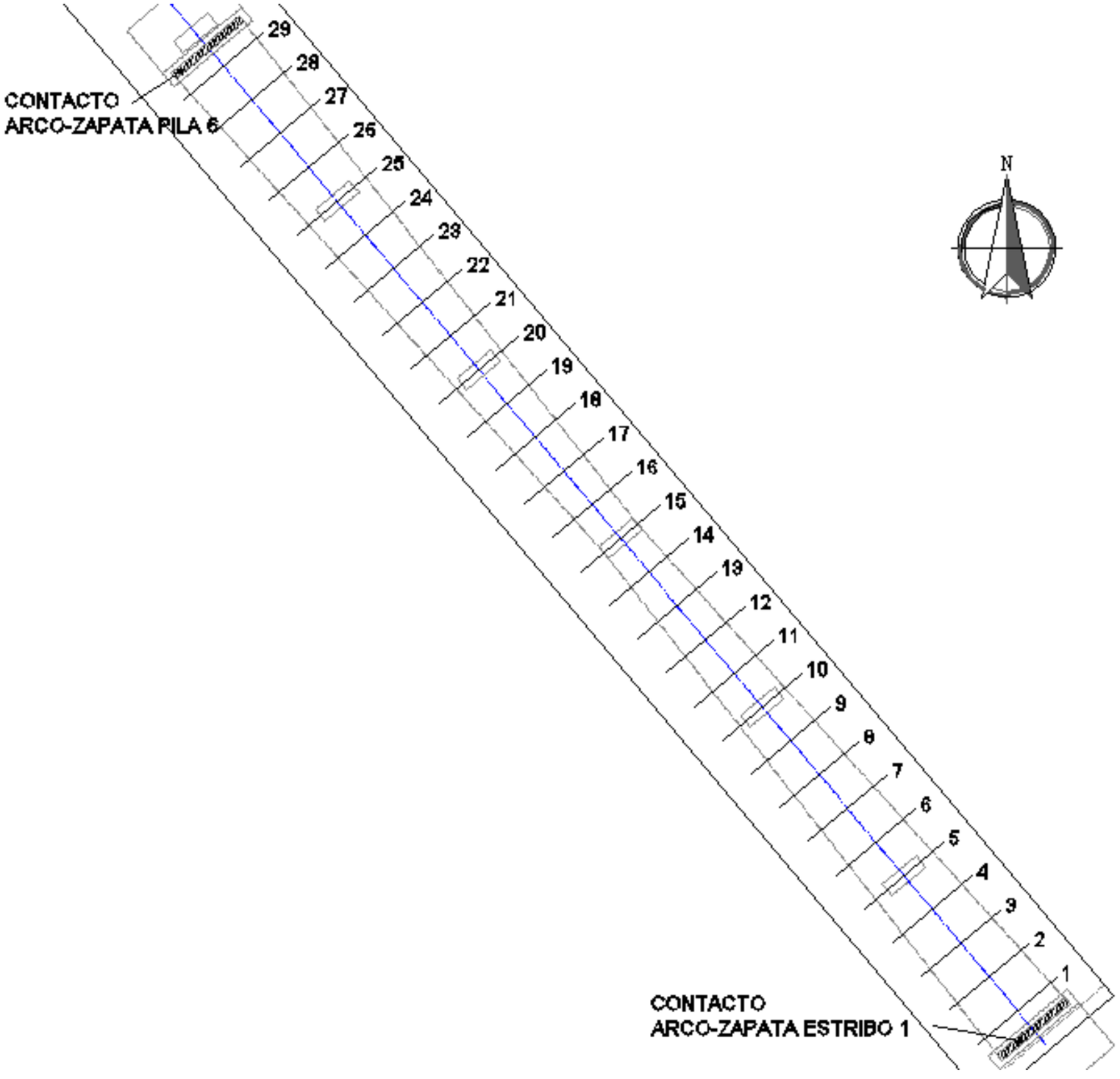
CONTACTO
ARCO-ZAPATA PILA 6
29
28
27
26
25
24
23
22
21
20
19
18
17
16
15
14
13
12
11
10
9
8
7
6
5
4
3
2
1
CONTACTO
ARCO-ZAPATA ESTRIBO 1
N

A continuación se muestran las coordenadas de los cuatro puntos singulares de cada una de las secciones obtenidas en la planta anterior:

SECCIÓN	PUNTO	X UTM	Y UTM	Z msnm
CONTACTO ARCO-ESTRIBO 1	1	628706.710	1405872.185	315.321
	2	628707.041	1405871.791	316.179
	3	628702.448	1405867.930	316.179
	4	628702.117	1405868.324	315.321
1	1	628705.735	1405873.242	316.083
	2	628705.735	1405873.242	317.212
	3	628701.243	1405869.466	317.212
	4	628701.243	1405869.466	316.083
2	1	628703.726	1405875.473	317.597
	2	628703.726	1405875.473	318.706
	3	628699.391	1405871.829	318.706
	4	628699.391	1405871.829	317.597
3	1	628701.718	1405877.703	318.975
	2	628701.718	1405877.703	320.065
	3	628697.539	1405874.191	320.065
	4	628697.539	1405874.191	318.975
4	1	628699.709	1405879.934	320.222
	2	628699.709	1405879.934	321.297
	3	628695.687	1405876.553	321.297
	4	628695.687	1405876.553	320.222
5	1	628697.700	1405882.164	321.345
	2	628697.700	1405882.164	322.405
	3	628693.836	1405878.916	322.405
	4	628693.836	1405878.916	321.345
6	1	628695.692	1405884.395	322.348
	2	628695.692	1405884.395	323.396
	3	628691.984	1405881.278	323.396
	4	628691.984	1405881.278	322.348
7	1	628693.683	1405886.626	323.236
	2	628693.683	1405886.626	324.274
	3	628690.132	1405883.641	324.274
	4	628690.132	1405883.641	323.236
8	1	628689.665	1405891.087	324.012
	2	628689.665	1405891.087	325.040
	3	628686.428	1405888.366	325.040
	4	628686.428	1405888.366	324.012
9	1	628687.657	1405893.317	324.679
	2	628687.657	1405893.317	325.699
	3	628684.576	1405890.728	325.699
	4	628684.576	1405890.728	324.679
10	1	628685.652	1405895.551	325.239
	2	628685.652	1405895.551	326.253
	3	628682.724	1405893.090	326.253
	4	628682.724	1405893.090	325.239
11	1	628683.639	1405897.779	325.695
	2	628683.639	1405897.779	326.704
	3	628680.872	1405895.453	326.704
	4	628680.872	1405895.453	325.695
12	1	628681.631	1405900.009	326.048
	2	628681.631	1405900.009	327.053
	3	628679.020	1405897.815	327.053
	4	628679.020	1405897.815	326.048
13	1	628679.622	1405902.240	326.299
	2	628679.622	1405902.240	327.302
	3	628677.169	1405900.178	327.302
	4	628677.169	1405900.178	326.299
14	1	628677.613	1405904.470	326.450
	2	628677.613	1405904.470	327.450
	3	628675.317	1405902.540	327.450
	4	628675.317	1405902.540	326.450

SECCIÓN	PUNTO	X UTM	Y UTM	Z msnm
15	1	628675.761	1405906.833	326.500
	2	628675.761	1405906.833	327.500
	3	628673.308	1405904.771	327.500
	4	628673.308	1405904.771	326.500
16	1	628673.911	1405909.197	326.450
	2	628673.911	1405909.197	327.450
	3	628671.299	1405907.001	327.450
	4	628671.299	1405907.001	326.450
17	1	628672.058	1405911.558	326.299
	2	628672.058	1405911.558	327.302
	3	628669.291	1405909.232	327.302
	4	628669.291	1405909.232	326.299
18	1	628670.206	1405913.920	326.048
	2	628670.206	1405913.920	327.053
	3	628667.282	1405911.462	327.053
	4	628667.282	1405911.462	326.048
19	1	628668.354	1405916.282	325.695
	2	628668.354	1405916.282	326.704
	3	628665.273	1405913.693	326.704
	4	628665.273	1405913.693	325.695
20	1	628666.502	1405918.645	325.239
	2	628666.502	1405918.645	326.253
	3	628663.264	1405915.924	326.253
	4	628663.264	1405915.924	325.239
21	1	628664.650	1405921.007	324.679
	2	628664.650	1405921.007	325.699
	3	628661.256	1405918.154	325.699
	4	628661.256	1405918.154	324.679
22	1	628664.650	1405921.007	324.012
	2	628664.650	1405921.007	325.040
	3	628661.256	1405918.154	325.040
	4	628661.256	1405918.154	324.012

SECCIÓN	PUNTO	X UTM	Y UTM	Z msnm
23	1	628662.798	1405923.370	323.236
	2	628662.798	1405923.370	324.274
	3	628659.247	1405920.385	324.274
	4	628659.247	1405920.385	323.236
24	1	628660.946	1405925.732	322.348
	2	628660.946	1405925.732	323.396
	3	628657.238	1405922.615	323.396
	4	628657.238	1405922.615	322.348
25	1	628659.094	1405928.095	321.345
	2	628659.094	1405928.095	322.405
	3	628655.230	1405924.846	322.405
	4	628655.230	1405924.846	321.345
26	1	628657.242	1405930.457	320.222
	2	628657.242	1405930.457	321.297
	3	628653.221	1405927.077	321.297
	4	628653.221	1405927.077	320.222
27	1	628655.391	1405932.819	318.975
	2	628655.391	1405932.819	320.065
	3	628651.212	1405929.307	320.065
	4	628651.212	1405929.307	318.975
28	1	628653.539	1405935.182	317.597
	2	628653.539	1405935.182	318.706
	3	628649.203	1405931.538	318.706
	4	628649.203	1405931.538	317.597
29	1	628651.687	1405937.544	316.083
	2	628651.687	1405937.544	317.212
	3	628647.195	1405933.768	317.212
	4	628647.195	1405933.768	316.083
CONTACTO ARCO-ZAPATA PILA 6	1	628650.813	1405938.686	315.321
	2	628650.482	1405939.080	316.179
	3	628645.889	1405935.220	316.179
	4	628646.220	1405934.826	315.321

3.4. ESTRIBOS

3.4.1. ESTRIBO 1

Los puntos utilizados para el replanteo del estribo 1 serán los siguientes:

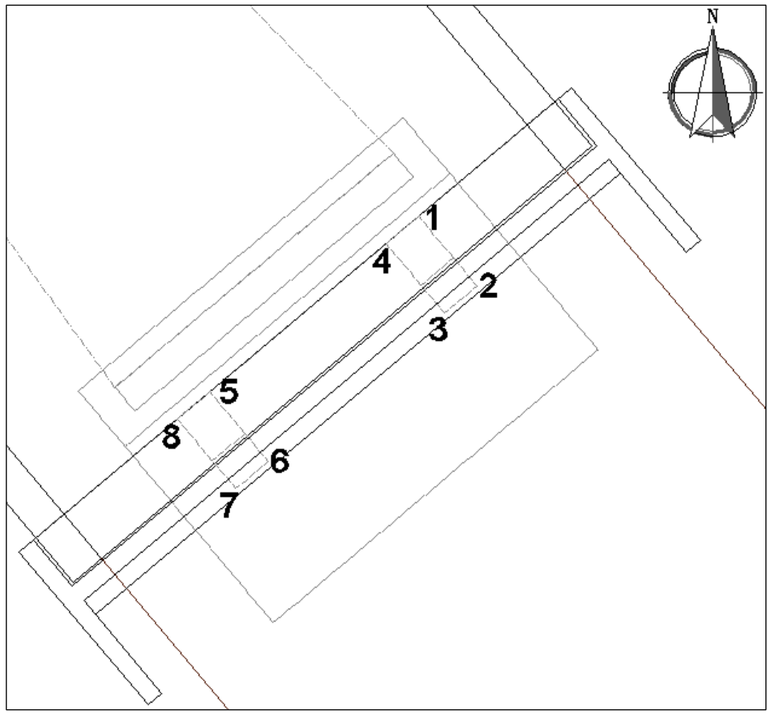

Las coordenadas de dichos puntos son los siguientes:

PUNTO ESTRIBO	X UTM	Y UTM	Z msnm
1	628707.126	1405871.145	316.784
2	628708.091	1405869.997	316.784
3	628707.556	1405869.547	316.784
4	628706.590	1405870.695	316.784
5	628703.682	1405868.250	316.784
6	628704.647	1405867.102	316.784
7	628704.111	1405866.651	316.784
8	628703.146	1405867.800	316.784

A continuación se muestra la figura con los siguientes puntos singulares del estribo:

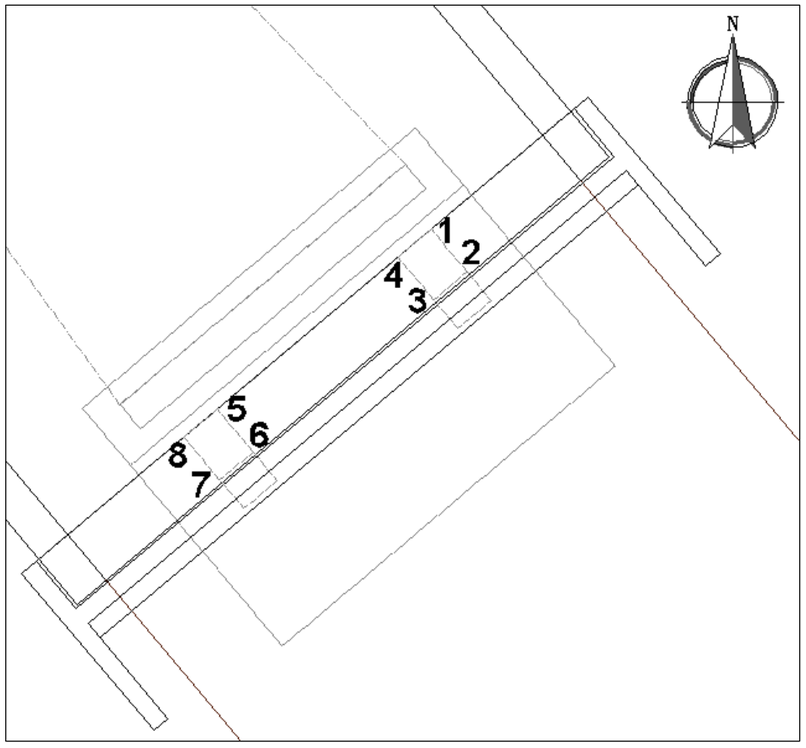

Coordenadas de los puntos del estribo:

PUNTO ESTRIBO	X UTM	Y UTM	Z msnm
1	628707.126	1405871.145	327.250
2	628707.705	1405870.457	327.250
3	628707.170	1405870.006	327.250
4	628706.590	1405870.695	327.250
5	628703.682	1405868.250	327.250
6	628704.261	1405867.561	327.250
7	628703.725	1405867.111	327.250
8	628703.146	1405867.800	327.250

También son importantes los cuatro puntos singulares de la cara superior del estribo 1, que se muestran en la siguiente figura:

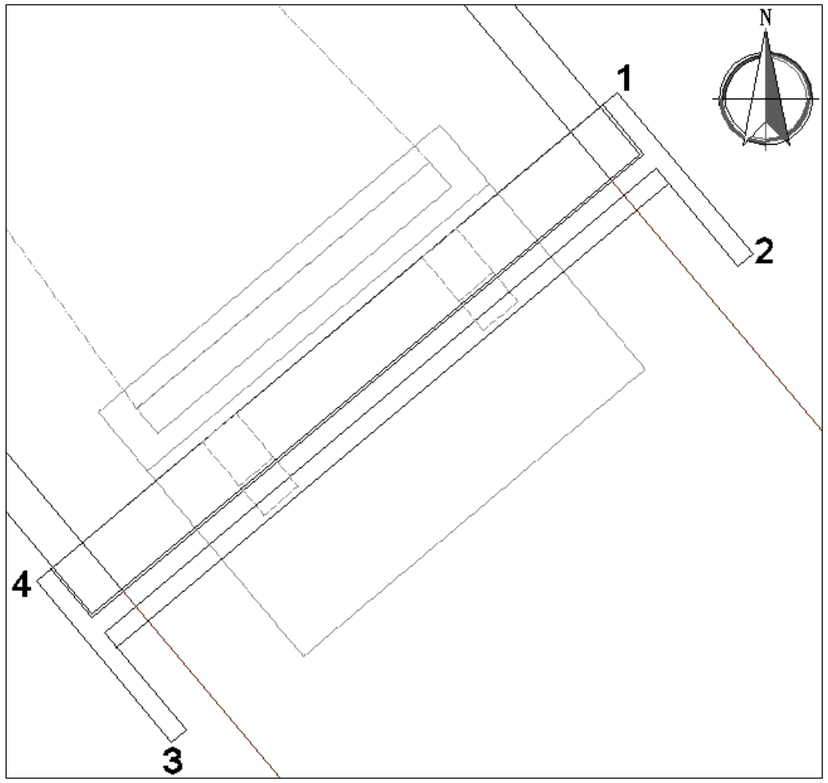

En la siguiente tabla se muestran las coordenadas de dichos puntos:

PUNTO ESTRIBO	X UTM	Y UTM	Z msnm
1	628709.652	1405873.269	329.750
2	628711.776	1405870.743	329.750
3	628702.666	1405863.086	329.750
4	628700.543	1405865.612	329.750

3.4.2. ESTRIBO 2

A continuación se muestran las cuatro esquinas del plano de contacto entre el estribo y su encepado, utilizadas para el replanteo:

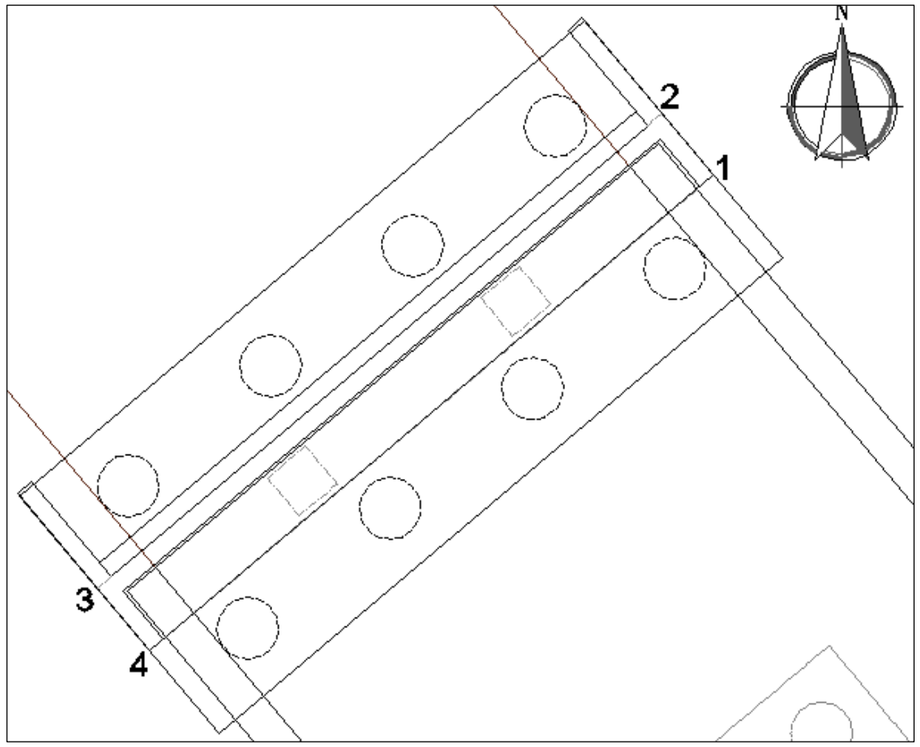

Las coordenadas de dichos puntos son las siguientes:

PUNTO ESTRIBO 2	X UTM	Y UTM	Z msnm
1	628597.695	1406006.466	327.250
2	628596.859	1406007.461	327.250
3	628587.749	1405999.804	327.250
4	628588.586	1405998.809	327.250

También se muestran las cuatro esquinas de la sección superior del estribo:

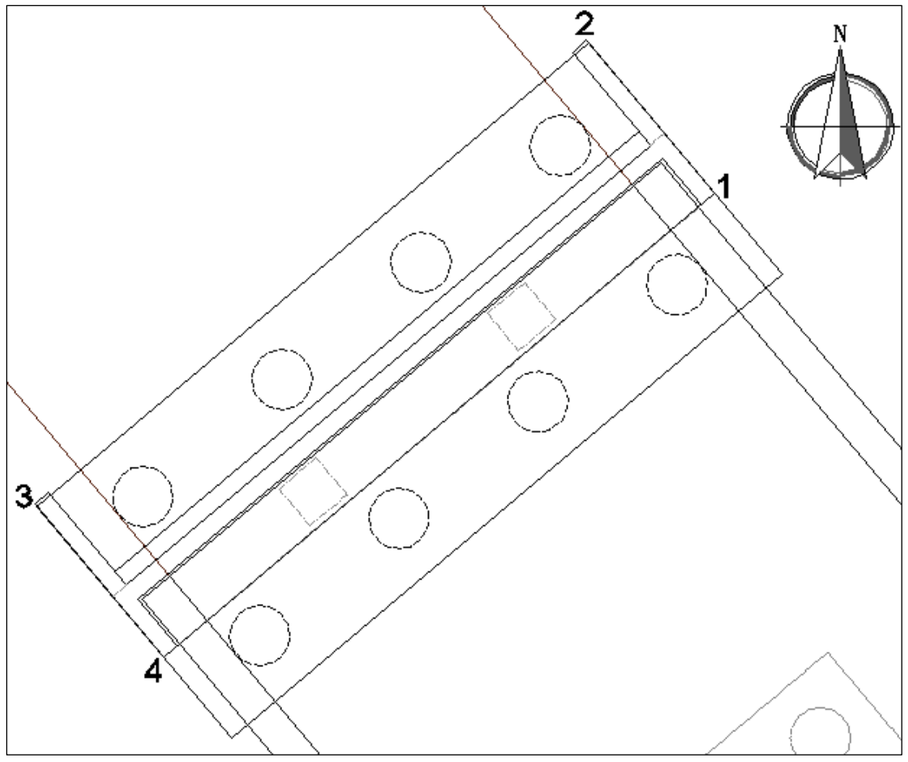

Cuyas coordenadas son:

PTO ESTRIBO	X UTM	Y UTM	Z msnm
1	628597.695	1406006.466	329.750
2	628595.572	1406008.992	329.750
3	628586.462	1406001.335	329.750
4	628588.586	1405998.809	329.750

3.5. TABLERO

El replanteo del tablero se realizará mediante secciones de éste, tomadas cada 5 metros. Al ser todo el tablero de sección constante, no será necesaria la definición de cada punto característico de la sección, sino que con definir las coordenadas del eje, bastará.

A continuación se muestra una figura con la sección del tablero:

SECCIÓN DEL TABLERO

Cotas en metros

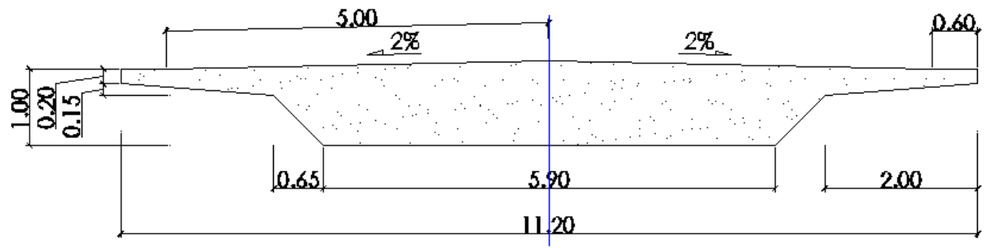

Sección transversal de losa aligerada exterior de canto constante

Coordenadas de puntos del eje del tablero, tomados cada 5 metros:

P.K.	X UTM	Y UTM	Z msnm
0+000	628705.419	1405869.058	329.750
0+005	628702.202	1405872.885	329.750
0+010	628698.992	1405876.704	329.750
0+015	628695.775	1405880.532	329.750
0+020	628692.551	1405884.368	329.750
0+025	628689.334	1405888.195	329.750
0+030	628686.124	1405892.014	329.750
0+035	628682.906	1405895.842	329.750
0+040	628679.689	1405899.669	329.750
0+045	628676.472	1405903.497	329.750
0+050	628673.255	1405907.324	329.750
0+055	628670.038	1405911.152	329.750
0+060	628666.821	1405914.979	329.750
0+065	628663.603	1405918.807	329.750
0+070	628660.386	1405922.634	329.750
0+075	628657.169	1405926.462	329.750
0+080	628653.945	1405930.298	329.750
0+085	628650.728	1405934.125	329.750
0+090	628647.510	1405937.953	329.750
0+095	628644.293	1405941.780	329.750
0+100	628641.076	1405945.608	329.750
0+105	628637.859	1405949.435	329.750
0+110	628634.642	1405953.263	329.750
0+115	628631.425	1405957.090	329.750
0+120	628628.207	1405960.918	329.750
0+125	628624.990	1405964.745	329.750
0+130	628621.773	1405968.573	329.750
0+135	628618.556	1405972.400	329.750
0+140	628615.339	1405976.228	329.750
0+145	628612.122	1405980.055	329.750
0+150	628608.904	1405983.883	329.750
0+155	628605.687	1405987.710	329.750
0+160	628602.470	1405991.538	329.750
0+165	628599.253	1405995.365	329.750
0+170	628596.036	1405999.193	329.750
0+175	628592.819	1406003.020	329.750

ANEJO Nº 11

PROCEDIMIENTO CONSTRUCTIVO

ÍNDICE

Página

1. INTRODUCCIÓN 5

2. DESCRIPCIÓN GENERAL DEL PROCESO CONSTRUCTIVO 5

3. FASES DE LA EJECUCIÓN DEL PUENTE 7

3.1. EXCAVACIÓN DEL TERRENO 7
3.2. CONSTRUCCIÓN DE CIMENTACIONES, ESTRIBOS Y PILAS VERTICALES 7
3.3. CIMBRADO, ENCOFRADO Y HORMIGONADO DEL ARCO Y PILAS 7
3.4. CIMBRADO, ENCOFRADO Y HORMIGONADO DEL TABLERO 8
3.5. EJECUCIÓN DE LOS ELEMENTOS FUNCIONALES DEL TABLERO 8
3.6. DESCIMBRADO Y DESENCOFRADO DEL PUENTE 8
3.7. PROTECCIÓN DE LAS CIMENTACIONES 8

1. INTRODUCCIÓN

En este Anejo se tratará de dar una visión global del procedimiento constructivo del puente, dividiéndolo en diferentes fases de actuación.

El conocimiento y la determinación del procedimiento constructivo de un puente por parte del proyectista tienen gran importancia, ya que dicho procedimiento puede condicionar el material o la tipología estructural a utilizar, para un determinado caso.

Además, el variar el procedimiento constructivo puede trastocar totalmente todo los cálculos efectuados, ya que algunos procedimientos llevan asociado un proceso de cálculo totalmente particularizado.

En nuestro caso, las operaciones a realizar no deben presentar especial complejidad, siendo tan sólo preciso cumplir la secuencia de procesos y tiempos que se detallan a continuación.

2. DESCRIPCIÓN GENERAL DEL PROCESO CONSTRUCTIVO

El procedimiento constructivo será una ejecución “in situ” por fases separadas por elementos funcionales que se describirán más adelante. Se considera que el procedimiento más conveniente para el caso que nos ocupa es el de cimbra apoyada en el suelo.

Se ha optado por la construcción "in situ" debido a que, al ser una estructura de hormigón armado, esta solución constructiva presenta cuantiosas ventajas económicas y técnicas frente a otros métodos constructivos validos pero que encarecerían innecesariamente el resultado final. El procedimiento elegido se caracteriza por la presencia de dos elementos básicos; el encofrado que da forma al hormigón y la cimbra, que lo sostiene en su sitio.

La cimbra a utilizar será de madera o metálica, dependiendo de cual resulte más económica. Sobre esta cimbra se apoyará un encofrado de madera, para dar forma a la geometría específica del dintel. Las pilas de la cimbra se apoyarán en el suelo sobre sus cimentaciones de hormigón, de modo que sus extremos queden bien ajustados para así obtener la altura del encofrado y facilitar las operaciones de desencofrado.

Dado que en este caso se trata de salvar un río, y al ser necesario operar en el tramo central del cauce, se procederá a realizar una obra provisional previa a la colocación de la cimbra. El objetivo de esta obra es asegurar que una subida de las aguas no se lleve la cimbra colocada y cause la destrucción del puente durante la fase de construcción. Para ello se colocarán varios tubos de 2 metros de diámetro, dimensionados para dar paso al rio y sus crecidas. Además, las obras de cimbrado y hormigonado del vano principal deben realizarse durante la estación seca para así reducir el riesgo de las crecidas.

Antes de comenzar con las tareas del proceso constructivo, será necesario establecer unas operaciones previas, encaminadas a permitir el acceso de materiales y equipos a la zona

de actuación de manera eficaz. Para ello se realizarán unas pistas o caminos que permitan acceder a todos los puntos donde es necesario actuar.

Inmediatamente después de estas operaciones se comenzará con la excavación del terreno natural en las zonas donde vayan las pilas, arco y estribos. Una vez que se ha llegado a la cota indicada se procederá a realizar las cimentaciones de los distintos elementos funcionales del puente, y posteriormente la construcción de dichos elementos, como son los estribos y pilas verticales del futuro puente.

Una vez llegado a este punto de la obra, se montará la mencionada cimbra de la primera fase, que principalmente consiste en el vano principal del puente que es el que se encuentra sobre el cauce del río. Justo después de montar la cimbra se colocará el encofrado que se apoya en dicha estructura, se dispondrán las armaduras pasivas en la posición especificada en el Proyecto y se procederá al hormigonado.

El tablero del puente se construirá por fases. La primera fase consistirá en el arco del vano principal de la estructura junto con las pilas. La segunda fase consistirá en las pilas verticales que se encuentran sobre el arco y los estribos. En la tercera fase se ejecuta el tablero del puente, dejando las juntas constructivas necesarias, hasta llegar a estribos.

En la primera fase se emplearán nueve semanas, de la cuales, las cuatros primeras se emplearán en las obras necesarias para montar la cimbra del arco, en la colocación de dicha cimbra, así como la colocación de encofrados. Las siguientes cuatros semanas se procederá a la colocación de la armadura pasiva, tanto del arco como de las pilas, y al hormigonado de dichos elementos. Y la última semana se empleará en desmontar la cimbra.

En la segunda fase, se emplearán cuatro semanas, en las que se ejecutarán las pilas que se encuentran sobre el arco y los estribos. Y en la tercera fase, se emplearán dos semanas para la ejecución de cada vano, una de ellas se empleará en desmontar la cimbra de la fase anterior y montarla en el siguiente, así como en la colocación de encofrados y armadura pasiva. Una vez colocado el encofrado y la armadura, se hormigonará, y 7 días más tarde se procederá a desmontarse el encofrado de la fase para la ejecución de la siguiente.

Como el puente tiene 3 fases diferenciadas, las cuales se realizarán en un total de 37 semanas, el número de días necesarios para su construcción será de 260. Otros 7 días más tarde será el momento a partir del cual puedan aplicarse las cargas permanentes. Éstas son el extendido de la capa de impermeabilización del tablero, la ejecución del firme, la colocación de las impostas, así como todos los elementos auxiliares.

La ejecución del puente finaliza con la realización de la preceptiva prueba de carga de la estructura, la cual se llevará a cabo transcurrido al menos 90 días desde la última operación de hormigonado, tal y como se indica en el Pliego de Condiciones del apartado Prueba de carga del Anejo nº 9. Cálculo Estructural.

3. FASES DE LA EJECUCIÓN DEL PUENTE

Una vez expuesto el procedimiento constructivo a utilizar de un modo general, se procede a una descripción más detallada del proceso, fase por fase.

3.1. EXCAVACIÓN DEL TERRENO

Antes de comenzar las fases de ejecución del puente es necesario realizar una excavación del terreno natural. Se excavará donde vayan las cimentaciones de los distintos elementos siendo cada excavación de una profundidad distinta debido a la forma del terreno. A estas excavaciones se les dará el ancho necesario para la realización de las cimentaciones así como las labores de ejecución de las mismas. Se ha decidido esto ya que es la solución más económica debido a que los volúmenes de tierra no son grandes.

Debido a la presencia del nivel freático a pocos metros de profundidad respecto de la superficie del terreno, se deberá utilizar procedimientos de tablestacas, agotamiento, o cualquier otro mecanismo que permita las labores de excavación y hormigonado.

3.2. CONSTRUCCIÓN DE CIMENTACIONES, ESTRIBOS Y PILAS VERTICALES

El proceso de ejecución del puente comienza con la realización de las cimentaciones. Dado la propia tipología del cauce así como la situación de las cimentaciones y estribos fuera del mismo, se considera que en esta fase de operaciones apenas se producirán afecciones, salvo avenidas no habituales.

La tipología elegida para la construcción de estos elementos son tanto cimentaciones profundas, mediante encepados rígidos y pilotes de hormigón armado, como cimentaciones superficiales, mediante zapatas rígidas. Los pilotes deberán llegar hasta la cota de roca sana y penetrar en ella lo suficiente, al igual que las zapatas, que deberán estar encajonadas cierta profundidad en la roca sana. Las operaciones constructivas a realizar en esta fase son las típicas de cualquier obra de hormigón armado. Será necesario excavar, encofrar, colocar armaduras pasivas, hormigonar, vibrar, curar el hormigón y por último, desencofrar.

Debido a la presencia del nivel freático a pocos metros de profundidad respecto de la superficie del terreno, se deberá utilizar procedimientos de tablestacas, agotamiento, o cualquier otro mecanismo que permita las labores de excavación y hormigonado de los encepados.

En lo que se refiere a las pilas verticales, se construirán igualmente por métodos tradicionales, al no tratarse de alturas fuera de lo común.

3.3. CIMBRADO, ENCOFRADO Y HORMIGONADO DEL ARCO Y PILAS

Este conjunto de operaciones constituye el cuerpo principal de la obra, ya que se trata de una estructura ejecutada completamente "in situ". Como ya se ha indicado anteriormente, el uso de cimbra convencional apoyada en el suelo está especialmente indicado para la construcción de este tipo de estructuras, debido a la poca altura que éstos suelen presentar.

La cimbra estará formada por un conjunto de elementos convenientemente arriostrados entre sí, para formar una estructura capaz de sustentar el encofrado de madera. Este encofrado servirá para dar forma a la sección del arco y del tablero propuesta para este puente.

Se dispondrá inicialmente una cimbra en la zona ocupada por el río a partir de la cual se ejecutará el encofrado de las dos pilas inclinadas y el tablero entre ambas. En lo que se refiere a la cimbra de este vano, se realizará una cimentación de los puntales de la cimbra, para ello en necesario previamente encauzar el río dado que no se puede obtener vigas metálicas para disponer en el cuerpo central y así evitar apoyos en el cauce. En caso de ser posible la obtención de estas, y resultasen económicas, sería conveniente su utilización para

así salvar el cauce y evitar la realización de dicha obra de encauzamiento. Una vez encauzado el río se realizara sobre los tubos una capa de hormigón armado, de 20 cm de espesor con un mallado con barras nº4, 1/2", o de 12 mm de diámetros, cada 20 cm. Sobre esta capa de hormigón armado se apoyarán los puntales. La ejecución de esta fase debe de realizarse en la época de sequías debido a que el río no presenta un gran caudal en este momento del año.

Sobre la cimbra se dispondrá el encofrado del arco y posteriormente las cuantías de la armadura pasiva correspondiente definida en Planos. Finalmente se realizará el hormigonado, y su posterior vibrado y curado para la ganancia de resistencia.

Posteriormente a la ejecución del arco, cuando presente las condiciones adecuadas en cuanto a resistencia, se ejecutarán las pilas situadas sobre el mismo.

3.4. CIMBRADO, ENCOFRADO Y HORMIGONADO DEL TABLERO

Se precisará de cimbras diferentes, teniendo en cuerna la que se debe disponer sobre el arco para la ejecución del tramo de tablero correspondiente, así como el cimbrado para los vanos restantes, de características habituales en estos procesos.

Una vez dispuesta toda la cimbra se procederá a la colocación de los encofrados, aparatos de apoyo y las cuantías de armadura pasiva definida en Planos. Posteriormente se hormigonará el tablero, y se pondrá especial cuidado en conseguir un adecuado curado de la masa de hormigón, para que la ganancia de resistencia de éste sea lo más rápida posible.

Se mantendrá el hormigón a una temperatura y humedad adecuadas, según la climatología reinante y mediante las medidas oportunas. Esta información se amplía en el Documento N°3: Pliego de Prescripciones Técnicas Particulares de este Proyecto.

3.5. EJECUCIÓN DE LOS ELEMENTOS FUNCIONALES DEL TABLERO

Finalizada la estructura se procederá a la ejecución en su superficie de la capa de impermeabilización del tablero, la colocación del firmen de hormigo armado, y la colocación de los elementos auxiliares como barandillas, señalización, drenaje, juntas de dilatación necesarios para conformar la sección transversal final.

3.6. DESCIMBRADO Y DESENCOFRADO DEL PUENTE

Posteriormente, al tiempo necesario para alcanzar la resistencia característica del hormigón del tablero, 28 días, se procederá al desencofrado del tablero y descimbrado del puente.

Recordar que el puente no puede entrar en servicio hasta la realización de la pertinente prueba de carga, la cual se detalla en el Anejo nº 9. Cálculo Estructural.

3.7. PROTECCIÓN DE LAS CIMENTACIONES

Para una mejor estabilidad de las cimentaciones, y mayor protección frente al agua se deberán de colocar escollera para proteger las cimentaciones del río y sus crecidas. Además, se deberá restaurar las márgenes del río, dejándolas lo más similar posible a como estaban antes del inicio de la obra, para ello se rellenarán las excavaciones realizadas.

ANEJO Nº 12

DEMOLICIÓN Y GESTIÓN DE RESIDUOS

ÍNDICE

Página

1. OBJETO DEL PROYECTO Y EMPLAZAMIENTO 5
2. DESCRIPCIÓN DEL ACTUAL PUENTE VADO 5
3. JUSTIFICACIÓN DE LA DEMOLICIÓN 6
4. VOLUMEN A DEMOLER 6
5. PROCESO DE DEMOLICIÓN Y GESTIÓN DE LOS RESIDUOS 6
6. ASPECTOS A TENER EN CUENTA 6
7. DEMOLICIÓN DE LA BASE DE LA CIMBRA 7

1. OBJETO DEL PROYECTO Y EMPLAZAMIENTO

El objetivo del presente anejo es la descripción y valoración de las obras necesarias para llevar a cabo la demolición del puente vado que se encuentra ubicado en la actualidad a 50 metros aguas arriba del futuro emplazamiento del nuevo puente aéreo vehicular, según se define en los planos de situación y emplazamiento correspondientes.

Las obras consisten en el derribo de dicho puente vado hasta el fondo natural o lecho del rio, para el posterior traslado del concreto que no sea apropiado para revestimiento a vertedero.

2. DESCRIPCIÓN DEL ACTUAL PUENTE VADO

Se trata de un puente vado de 60 metros de longitud y 5.20 metros de ancho de concreto, la función de este es ser rebasado cuando existen crecidas por lo que el paso queda incomunicado hasta que el caudal no disminuye.

El problema recae en la socavación de ambos extremos del puente con la consiguiente destrucción del tablero y la obstrucción que genera la maleza y troncos arrastrados por la corriente, esto ha llevado a la imposibilidad de su utilización tras grandes avenidas.

En las siguientes fotografías se muestra lo anteriormente descrito.

3. JUSTIFICACIÓN DE LA DEMOLICIÓN

Una vez ejecutado el puente aéreo, el actual vado ya no tendrá ninguna utilidad, siendo además su conservación, contraproducente, por los siguientes motivos:

- El vado, constituye una barrera artificial en el cauce natural del río, por lo que es seguro, que ante las grandes crecidas, se generarán remansos, que aumentarán la cota de inundación aguas arriba, pudiendo quedar afectados tanto viviendas como terrenos de cultivo, ganado…
- La estructura del vado ha sufrido numerosas crecidas, afectando a los componentes de éste. Con motivo de las futuras crecidas, la estructura podría colapsar y ser arrastrada aguas abajo, comprometiendo la seguridad estructural del proyecto.
- Es inseguro el paso por el puente en las épocas de lluvia, por lo que eliminándolo, se forzará el paso por el puente aéreo.

4. VOLUMEN A DEMOLER

El volumen de concreto a demoler de forma aproximada será:

Volumen de concreto= 936.00 m³

Volumen extremos= 76.00 m³

A deducir volumen alcantarillas= 202.16 m³

Volumen total= 809.84 m³

5. PROCESO DE DEMOLICIÓN Y GESTIÓN DE LOS RESIDUOS

La demolición se realizará en su totalidad por medios mecánicos, con el objetivo de aumentar los rendimientos, pero sobre todo de prácticamente anular los riesgos hacia las personas, por lo que no será necesario tomar medidas de seguridad especiales. El proceso se llevará a cabo mediante una retroexcavadora equipada con martillo hidráulico. La retroexcavadora, equipada con la cuchara, efectuará un relleno de tierras en uno de los extremos del puente vado, con material sobrante de la propia obra, con el fin de poder situarse sobre el puente vado.

La retroexcavadora comenzará ubicada en el extremo opuesto de donde se realiza el relleno e irá avanzando en retroceso a lo largo del vado, utilizando el martillo hidráulico irá demoliendo el concreto a la vez que se desplaza. Cuando se haya producido el escombro suficiente sobre el lecho del río, la retroexcavadora cambiará el martillo hidráulico por una cuchara e irá depositando el escombro sobre un camión volquete situado también sobre el puente vado. Este proceso se repetirá hasta haber demolido todo el volumen de concreto. Y los escombros producidos serán transportados al botadero más cercano.

6. ASPECTOS A TENER EN CUENTA

La demolición no se llevará a cabo hasta que no esté habilitado el puente aéreo vehicular, para que el actual puente vado, con las correspondientes reparaciones, pueda servir de paso provisional durante la ejecución de la obra. Esta aclaración es debido a que en el presupuesto la remoción de estructuras de concreto se encuentra en la etapa de preliminares, por motivo de la estructuración de la guía del FISE.

Además para facilitar el proceso de demolición es importante que se efectúe durante la época de estiaje.

7. DEMOLICIÓN DE LA BASE DE LA CIMBRA

Al tratarse del mismo tipo de estructura que el puente vado, el proceso de demolición a seguir será idéntico.

La demolición se llevará a cabo cuando haya transcurrido el tiempo suficiente para que se puedan retirar con total seguridad, tanto las formaletas como las cimbras.

El volumen a demoler en la base de la cimbra será **731.71 m³**.

ANEJO Nº 13

ESTUDIO DE IMPACTO AMBIENTAL

ÍNDICE

Página

1. INTRODUCCIÓN 5

2. CLASIFICACIÓN AMBIENTAL DEL PROYECTO 5

2.1. CATEGORÍAS AMBIENTALES 5
2.2. ÁREAS PROTEGIDAS DE NICARAGUA 6
2.3. ECOSISTEMAS DE LA ZONA 7
2.4. CLASIFICACIÓN 8

3. EVALUACIÓN DEL EMPLAZAMIENTO O PREFACTIFILIDAD AMBIENTAL 8

4. ANÁLISIS AMBIENTAL 10

4.1. CALIDAD AMBIENTAL DEL SITIO SIN CONSIDERAR EL PROYECTO 10
4.2. IMPACTOS AMBIENTALES QUE GENERA EL PROYECTO 11
4.3. PROGRAMA DE MITIGACIÓN DE LOS IMPACTOS AMBIENTALES GENERADOS POR EL PROYECTO. 12
4.4. PROGRAMA DE CONTINGENCIAS ANTE RIESGOS 13

1. INTRODUCCIÓN

En el presente anejo se valora el impacto ambiental que el proyecto generará, tanto a largo plazo como a corto plazo en la zona.

La evaluación de impacto ambiental se basa en el SISTEMA DE EVALUACIÓN AMBIENTAL DE NICARAGUA (Decreto 76-2006).

2. CLASIFICACIÓN AMBIENTAL DEL PROYECTO

2.1. CATEGORÍAS AMBIENTALES

El sistema de evaluación antes mencionado, clasifica el proyecto como una OBRA HORIZONTAL, es decir, proyectos que se desarrollan a través de una superficie territorial relativamente extensa entre las que se encuentran: carreteras y vías de comunicación, conductos, túneles, presas, canales, vías férreas…

Una vez clasificada la obra se procede a la clasificación ambiental. Las obras pueden ser consideradas en las categorías I, II, III, IV o V:

- **Categoría ambiental I:** Las obras, proyectos e industrias categoría I, son considerados proyectos especiales por su trascendencia nacional, binacional o regional, por su connotación económica, social, ambiental y, porque pueden causar Alto Impacto Ambiental Potencial, están sujeto a un Estudio de Impacto Ambiental. Será administrado por el MARENA Central a través de la Dirección General de Calidad Ambiental, en coordinación con las Unidades Ambientales, Sectores pertinentes, las Delegaciones Territoriales del MARENA y los Gobiernos Municipales, según el caso. En el caso de las Regiones Autónomas, el Consejo Regional respectivo en coordinación con las Alcaldías Municipales y comunidades involucradas, emitirán sus consideraciones técnicas a MARENA expresada en resolución del Consejo Regional, para ser incorporadas en la resolución administrativa correspondiente.

- **Categoría Ambiental II:** Las obras, proyectos, industrias y actividades considerados Categoría Ambiental II que pueden causar impactos ambientales potenciales altos, están sujetos a un Estudio de Impacto Ambiental. Será Administrado por el MARENA Central a través de la Dirección General de Calidad Ambiental, en coordinación con las autoridades ambientales sectoriales pertinentes, las delegaciones territoriales de MARENA y los Gobiernos Municipales, según el caso y el tipo de obra, proyecto o actividad. En el caso de las Regiones Autónomas, el sistema será administrado por los Consejos Regionales a través de las Secretarias de Recursos Naturales y Medio Ambiente (SERENA), en coordinación con el Ministerio del Ambiente y los Recursos Naturales.

- **Categoría ambiental III**: Los proyectos considerados en la Categoría Ambiental III son proyectos que pueden causar impactos ambientales moderados, aunque pueden generar efectos acumulativos, por lo que quedaran sujetos a una valoración ambiental, como condición para otorgar la autorización ambiental correspondientes proceso de valoración Ambiental y emisión de la autorización ambiental correspondiente. El proceso de valoración ambiental correspondiente quedaran a cargo de las Delegaciones territoriales del MARENA o consejos regionales en el ámbito de su territorio. Será administrado por MARENA a través de las Delegaciones territoriales, en coordinación con las Unidades Ambientales Sectoriales y Municipales pertinentes, según el tipo de obra, proyecto, industria o actividad. En el caso de las Regiones Autónomas, el Sistema será administrado por los Consejos Regionales a través de la Secretarias de Recursos Naturales y Medio Ambiente (SERENA), en coordinación con el Ministerio del Ambiente y los Recursos Naturales.

- **Categoría ambiental IV:** Agrupa algunos tipos de proyectos del Sistema de Inversión Pública que no están sujetos a los procedimientos ambientales de Ley y que por su incidencia ambiental deberían llevar durante su ciclo de vida un conjunto de instrumentos ambientales que incluyen: evaluación del emplazamiento, análisis ambiental, evaluación ambiental, seguimiento y monitoreo.

- **Categoría ambiental V:** Agrupa algunos tipos de proyectos del Sistema de Inversión Pública que no están sujetos a los procedimientos ambientales de Ley y que por su baja incidencia ambiental sólo deberían ajustarse a ciertos requisitos o normativas ambientales.

Proyectos especiales: Tipología de proyectos que tienen alta significación económica y ambiental para el país y pueden incidir significativamente en una o más regiones ecológicas de Nicaragua, según el mapa de Ecosistemas oficial del país, o bien trasciende a escala nacional, internacional, transfronteriza, considerándose además como proyectos de interés nacional por su connotación económica, social y ambiental.

Alto impacto ambiental: Impacto ambiental potencial preestablecido de forma aproximada que considera un alto riesgo para el medio ambiente obtenido a partir de considerar actuaciones similares que ya se encuentran en operación.

Moderado impacto ambiental potencial: Impacto ambiental potencial preestablecido de forma aproximada que considera un mediano riesgo para el medio ambiente obtenido a partir de considerar actuaciones similares que ya se encuentran en operación.

2.2. ÁREAS PROTEGIDAS DE NICARAGUA

Las áreas protegidas son aquellos espacios que tienen por objeto la conservación, el manejo racional y la restauración de la flora, fauna silvestre y otras formas de vida, así como la biodiversidad y la biósfera. Dichas áreas son recogidas por el SINAP (Sistema Nacional de Áreas Protegidas).

En el siguiente mapa temático se muestran las diferentes áreas protegidas cercanas a los municipios de Esquipulas y San Dionisio, así como la ubicación del proyecto:

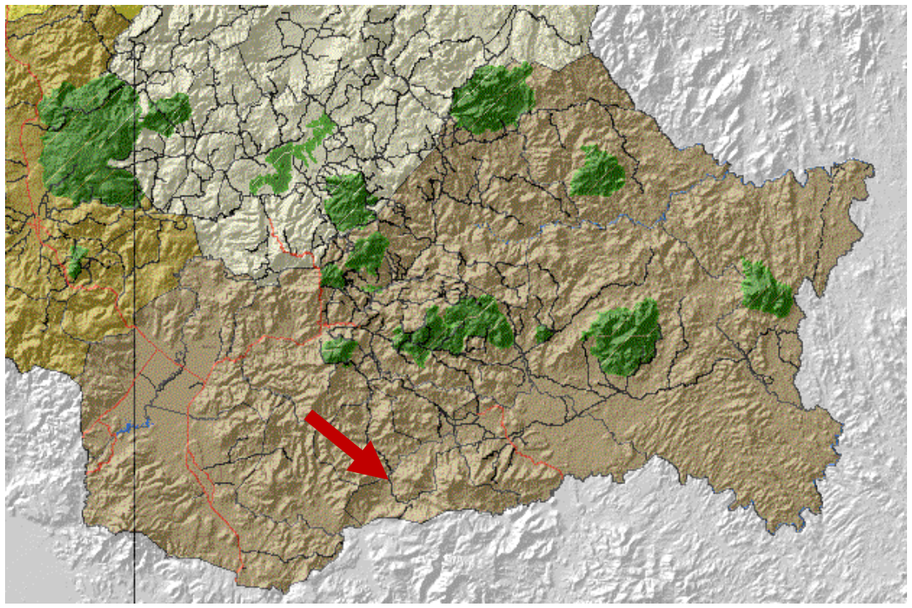

Como podemos observar, el proyecto se encuentra fuera de cualquier área protegida, y además situándose la más cercana a unas 10 millas (16 km).

2.3. ECOSISTEMAS DE LA ZONA

En el año 2000, Nicaragua fue dividida en 68 tipos diferentes de ecosistemas o formaciones vegetales, mas tarde, en 2006, algunos de esos ecosistemas fueron agrupados por ser considerados muy similares, quedando definitivamente 44 tipos diferentes.

A continuación se muestra la zona de estudio, con la división de los diferentes tipos de ecosistema:

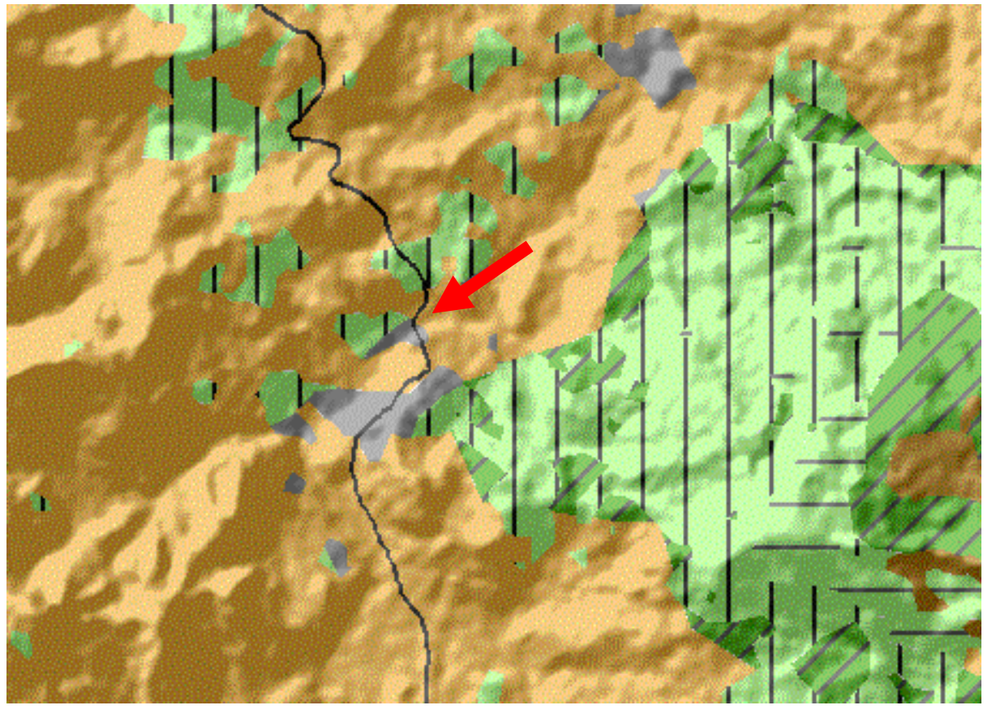

Como se observa, la zona del proyecto, está cercana a tres tipos de ecosistema que a continuación se describen:

- Zona marrón→ Ecosistema SPA-1: Sistema productivo agropecuario.

Son áreas mosaicos de terrenos agrícolas, ganaderos y remanentes de bosques naturales de áreas pequeñas a medianas que en total pueden tener en ciertos sectores, 77 generalmente agrícolas de 10 a 25 % de vegetación natural y ganaderas de 25 a 50 % de vegetación natural. En los terrenos agrícolas ó de barbecho hay predominio de hierbas (malezas) hemicriptofitas y geofitas que se adapta a la cobertura (competencia) de plantas cultivadas perennes. Hierbas anuales están presentes pero no predominantemente. La diversidad de herbácea ha sido significativamente disminuida por el uso de herbicidas químicos.

En la región Central Este (Matagalpa y Jinotega), es predominantemente accidentada, con terrenos planos ondulados en las mesetas y valles intramontanos y terrenos accidentados, quebrados y escarpados en las laderas y partes altas de las cordilleras. Tiene una variedad de pisos altitudinales, pero en la zona de Esquipulas, pocas áreas menores de 300 msnm y área de 300-800msnm (318msnm en el paso Bopal), la precipitación pluvial media anual es de 800 -1200 mm, irregular, con periodos caniculares prolongados y temperatura media anual de 24 a 26ºC. En estas zonas hay áreas de ganadería extensiva e intensiva, cultivo de arroz intensivo de riego y hortalizas (cebolla, tomate y chiltoma) intensivas de riego.

- Zona azul→ Ecosistema VIAd: Lava con escasa vegetación.

A altitud entre 300 y 1,750 msnm, con media anual de: precipitación de 1,000 - 1800 mm, temperatura 20°C en las partes altas y 28°C en la planicie. Terreno con rocas basálticas volcánicas recientes, cuando hay suelo recién formado entre las grietas de rocas lávicas irregulares (“áa”), la vegetación es monótona conformada de árboles bajos.

- Zona verde clara→ Ecosistema IB1a(1)-2: Bosque deciduo de bajura o submontano, intervenido.

De 0-600 msnm. En suelos de origen volcánico Cuaternario y rocas del Terciario, a veces en suelos aluviales y sedimentarios; de una gran variedad de texturas: arcilloso, franco arcilloso, franco, franco arenoso, arenoso, etc. La humedad relativa oscila entre 40 y 80 %

dependiendo de la época. La precipitación de 900 a 2,000 mm promedio anual (Mayo a Octubre), la temperatura media anual es entre 26-29 °C promedio.

- Zona verde oscura→ Ecosistema lA2b (1): Bosque siempre verde estacional montano (600-1,100m) intervenido.

Se encuentran a altitudes entre 700 y 1,200 msnm. Los suelos son Molisoles que se han desarrollado a partir de rocas volcánicas básicas (basaltos, andesitas), con una textura media grumosa suave, de color oscuro ricos en materia orgánica, superficiales (± 25 cm), con un buen drenaje. Llueve de 1,200 a 1,800 mm al año de Mayo a Diciembre y presenta temperaturas medias anuales de 21 a 24ºC (INETER).

2.4. CLASIFICACIÓN

Según el cuadro de categorización ambiental de proyectos (Decreto 76-2006), el proyecto está situado en el sub sector "transporte vial interurbano (carreteras)" y en el tipo de proyecto "construcción de puentes", estando por ello clasificado dentro de la categoría ambiental IV.

Como se ha justificado anteriormente, se encuentra muy alejado de cualquier área protegida. Ninguno de los ecosistemas en los que se encuentra enmarcado, corre riesgo de ser alterado por causa de la obra.

Por todo esto, y al no estar incluido dentro de las tres primeras categorías ambientales, se considera un proyecto de bajo impacto ambiental, por lo tanto no está sujeto a un estudio de impacto ambiental para el otorgamiento de un permiso ambiental, ni requiere de la autorización ambiental del Ministerio del Ambiente y los Recursos Naturales (MARENA). Aún así, el Nuevo FISE ha diseñado Instrumentos Ambientales que conforman el Sistema de Gestión Ambiental (SISGA-FISE) los cuales son aplicables a proyectos de categorías ambientales IV y V que por su incidencia ambiental deben llevar una Evaluación de Emplazamiento y un Análisis Ambiental.

3. EVALUACIÓN DEL EMPLAZAMIENTO O PREFACTIFILIDAD AMBIENTAL

La evaluación del Emplazamiento se realiza para evitar alguna de las siguientes implicaciones:

- Vulnerabilidad del proyecto ante desastres naturales.
- Efectos ambientales negativos.
- Efectos sociales indeseables.
- Vulnerabilidad por carencia de sostenibilidad del proyecto.

La evaluación de cada componente se hace valorando todas las variables que lo integran, para ello, contando con la información de las características ambientales del territorio donde se emplazará el proyecto, se rellenan los valores obtenidos en escala (E) que va desde un valor 1 hasta 3 por cada variable objeto de estudio. Los valores son elaborados considerando tres rangos de situaciones que se pueden presentar en cada variable y su significado es el siguiente:

- Los valores de 1 en la escala representan las situaciones más riesgosas, peligrosas o ambientalmente no compatibles con el tipo de proyecto que se evalúa.
- Los valores de 2 en la escala representan situaciones intermedias de riesgos, peligros o ambientalmente aceptables con limitaciones con el tipo de proyecto que se evalúa.
- Los valores de 3 en la escala representan situaciones libres de todo tipo de riesgos y compatibles ambientalmente.

La columna P se corresponde con el peso o importancia del problema, así las situaciones con más riesgo o ambientalmente incompatibles tienen la máxima importancia o

peso (3), mientras que las situaciones sin riesgo o ambientalmente compatibles tienen la mínima importancia o peso (1), mientras que las situaciones intermedias tienen un peso o importancia mediado (2).

La columna F se refiere a la frecuencia, es decir, la cantidad de veces que en el histograma se obtiene la misma evaluación o escala. En la columna E x P x F, se multiplican los tres valores, o sea la escala o evaluación por el peso o importancia por la frecuencia. Mientras que en la columna P x F se multiplican sólo los valores del Peso o importancia por la Frecuencia. Posteriormente se suman los valores totales de la columna ExPxF y los valores de la columna PxF. Finalmente se divide la suma total de la columna ExPxF entre la suma total de la columna PxF y se obtiene el valor del componente.

Finalmente la evaluación final del sitio vendrá dada por un promedio de los valores registrados por todos los componentes. El procedimiento es el siguiente: Se suma el valor registrado por todos los componentes y se divide entre el número total de componentes. Este valor oscilará entre 1 y 3 teniendo el siguiente significado:

Valores entre 1 y 1.5 significa que el sitio donde se propone emplazar el proyecto es muy vulnerable, con alto componente de riesgo a desastres y/o con un severo deterioro de la calidad ambiental pudiendo dar lugar a la pérdida de la inversión o afectar a la salud de las personas que utilizarán el servicio. Por lo que el FISE recomienda no elegible el sitio para el desarrollo del proyecto y recomienda la selección de otro lugar.

Valores entre 1.6 y 2.0 significa que el sitio donde se propone emplazar el proyecto es vulnerable ya que tiene algunos riesgos a desastres y/o existen limitaciones ambientales que pueden eventualmente afectar a la salud de las personas que utilizan el sitio. Por lo que el FISE sugiere la búsqueda de una mejor alternativa de localización y en caso de no presentarse otra alternativa el FISE estudiará de forma detallada la elegibilidad del sitio para el desarrollo del proyecto.

Valores entre 2.1 y 2.5 significa que el sitio es poco vulnerable, con muy bajo componente de riesgo a desastres y/o bajo deterioro de la calidad ambiental a pesar de limitaciones aisladas. El FISE considera esta alternativa de sitio elegible siempre y cuando no se obtengan calificaciones de 1 en algunos de los siguientes aspectos:

- Sismicidad
- Deslizamientos
- Vulcanismo
- Mar y lagos
- Fuentes de contaminación

Valores superiores a 2.6 significa que el sitio no es vulnerable, exento de riesgo y/o buena calidad ambiental para el emplazamiento del proyecto.

COMPONENTE GEOLOGIA									
E	SISMICIDAD	DESLIZAMIENTO	VULCANISMO	RANGO DE PENDIENTE	CALIDAD SUELO	**P**	**F**	**ExPxF**	**PxF**
1						**3**	**0**	**0**	**0**
2						**2**	**0**	**8**	**0**
3	**X**	**X**	**X**	**X**	**X**	**1**	**5**	**15**	**5**
VALOR TOTAL= ExPxF/PxF =3								**15**	**5**
COMPONENTE ECOSISTEMA									
E	SEDIMENTACION	HIDROLOGIA SUPERFICIAL	HIDROLOGIA SUBTERRANEA	MAR Y LAGOS	ÁREAS AMBIENTALES FRÁGILES	**P**	**F**	**ExPxF**	**PxF**
1						**3**	**0**	**0**	**0**
2	**X**					**2**	**1**	**4**	**2**
3		**X**	**X**	**X**	**X**	**1**	**4**	**12**	**4**
VALOR TOTAL= ExPxF/PxF=2.67								**16**	**6**
COMPONENTE INSTITUCIONAL SOCIAL									
E	CONFLICTO TERRITORIAL	IMPORT. OCIOECO.	PARTICIPACION CIUDADANA	PLAN DE INVERSIÓN		**P**	**F**	**ExPxF**	**PxF**
1						**3**	**0**	**0**	**0**
2	**X**					**2**	**1**	**4**	**2**
3		**X**	**X**	**X**		**1**	**3**	**9**	**3**
VALOR TOTAL= ExPxF/PxF=2.60								**13**	**5**

RESUMEN DE LA EVALUACIÓN DEL EMPLAZAMIENTO		
FACTORES	EVALUACIÓN	OBSERVACIÓN
COMPONENTE GEOLOGÍA	3.00	•Según el análisis realizado por el medio de la matriz de emplazamiento podemos decir que donde se está emplazando el proyecto no es vulnerable, está exento de riesgo y por lo tanto goza de buena calidad ambiental para la ejecución del mismo por lo que se considera elegible para su desarrollo. •Si hay que tener en cuenta las recomendaciones que se harán en el programa de mitigación para el momento de la ejecución de las obras para no alterar el ambiente en que se encuentra el área sin proyecto.
COMPONENTE ECOSISTEMA	2.67	
COMPONENTE INSTITUCIONAL SOCIAL	2.60	

4. ANÁLISIS AMBIENTAL

El Análisis Ambiental se basa en los siguientes aspectos:

- Calidad Ambiental del sitio sin considerar las acciones que pueda introducir el proyecto.
- Impactos Ambientales que genera el proyecto.
- Programa de mitigación de los impactos ambientales que genera el proyecto.
- Plan de contingencias ante los riesgos naturales.

4.1. CALIDAD AMBIENTAL DEL SITIO SIN CONSIDERAR EL PROYECTO

Se pretende conocer mediante una valoración cualitativa la calidad ambiental del sitio donde se emplazará el proyecto, así como de su área de influencia. El propósito fundamental es predecir como evolucionaría el medio ambiente sin proyecto.

La calidad ambiental del sitio se determina mediante la matriz donde se relacionan los principales factores ambientales que serán valorados en tres niveles según el criterio a utilizar. A continuación se muestra el cuadro para definir dichos niveles:

CRITERIOS	CALIDAD AMBIENTAL		
	NIVEL 3	NIVEL 2	NIVEL 1
Intensidad de los problemas ambientales observados en el sitio para cada factor	BAJA o no existen problemas	MEDIA	ALTA
Superficie afectada por el problema	Se observa sólo en el sitio aislado (puntual) o no se observa	Se observa más allá del sitio (parte del territorio)	Se observa en todo el municipio más allá
¿Se puede recuperar el medio Ambiente?	SI (en el plazo de 1 año)	SI (entre 1 y 10 años)	NO
Duración de los problemas ambientales observados	Menos de 1 año o no hay problemas	Entre 1 y 5 años	Más de 6 años
Cantidad de población de la comunidad próxima al sitio afectada	Menos del 25 % o no hay población afectada	Entre el 26% el 50%	Mas del 50%

Siendo la matriz del análisis ambiental:

FACTORES AMBIENTALES	ALTERACIONES AMBIENTALES		VALORACIÓN DE LA CALIDAD AMBIENTAL DEL FACTOR
	CAUSAS ESPECIFICAR LAS ACCIONES HUMANAS QUE GENERAN EL DETERIORO DE LA CALIDAD AMBIENTAL EN CASO QUE LA VALORACIÓN SEA MALA	**EFECTOS** ESPECIFICAR LOS EFECTOS QUE SE OBSERVAN EN EL MEDIO AMBIENTE DEBIDO AL DETERIORO DE LA CALIDAD AMBIENTAL EN CASO QUE LA VALORACIÓN SEA MALA	
CALIDAD DEL AIRE	Alta densidad de circulación vehicular u otras fuentes puntuales en el área de influencia	Contaminación del aire por la emisión de humos y gases	2
	Tipos de rocas que propician emisión de polvos	Contaminación del aire por la emisión de polvo	
	Erosión eólica		
	Vertido de desechos sólidos y líquidos a cielo abierto en las áreas de trazado	Contaminación del aire por la emisión de gases y malos olores	
RUIDO	Producida por la circulación vehicular	Elevados niveles de ruido que provocan molestias	2
CANTIDAD Y CALIDAD DE LAS AGUAS SUPERFICIALES	Vertidos directos de aguas contaminadas a fuentes superficiales	Contaminación de las aguas superficiales con repercusión en la salud y el ecosistema	2
	Deficiente higiene comunal		
	Vertido de desechos sólidos en cauces, y fuentes de agua superficiales		
	No tratamiento de las aguas servidas		
CANTIDAD Y CALIDAD DE LAS AGUAS SUBTERRÁNEAS	Vertido directo de desechos sólidos y líquidos	Probabilidad de contaminación de las aguas, aumento de enfermedades	2
SUELOS	Vertido de desechos domésticos y desechos peligrosos	Afectación a suelos de calidad edáfica, daños a la producción agrícola	1
CUBIERTA VEGETAL	Deforestación	Procesos de erosión, sedimentación, pérdida de especias de alto valor, daño al hábitat de la fauna, modificación del régimen hidrológico	1
PAISAJE	Modificación de la Topografía, geomorfología y vegetación existentes en zonas de alto potencial paisajístico	Pérdida de la calidad paisajística	1
MEDIO CONSTRUIDO	Deficiente higiene comunal, emisión de las aguas jabonosas	Ausencia o deficiente tratamiento adecuado de los desechos sólidos y líquidos	2
POBLACIÓN	Falta de empleo de la población	Alteraciones sobre la estructura demográfica estimulando la emigración o inmigración	2
CALIDAD DE VIDA	Condiciones higiénico sanitarias y epidemiológicas (acueducto, alcantarillado y saneamiento)	Las alteraciones sobre la salud dependen en gran medida de los niveles de contaminación que se produzcan (medios o episódicos) y de las características de la población, especialmente la estructura de edades. Las afecciones sanitarias que se producen son principalmente respiratorias, gastrointestinales, enfermedades contagiosas o de transmisión por vectores (dengue, malaria, cólera y otras) enfermedades de transmisión sexual cardiovasculares, así como efectos sobre el rendimiento en el trabajo y psicológicas	2
CULTURA	Acciones que dañan el patrimonio construido y los gustos y costumbres locales	Deterioro del patrimonio cultural	2
VALOR MEDIO DE IMPORTANCIA			1.72

4.2. IMPACTOS AMBIENTALES QUE GENERA EL PROYECTO

El impacto generado por el proyecto se mide según las alteraciones ambientales que puedan crear las diferentes acciones del proyecto, tomando en consideración las diferentes etapas o estadios por los que transitará el proyecto. Las acciones de los proyectos se valoran para las siguientes etapas:

- Durante la construcción
- Durante el funcionamiento

Los impactos que se producen en la etapa de construcción se caracterizan por ser de corta duración aunque pueden llegar a ser intensos comparados con los que se generan durante el funcionamiento, debido a que estos actuarán durante la vida útil del proyecto.

Se valora cada impacto de forma cualitativa por el efecto que este causa; los criterios a utilizar son los mismos definidos anteriormente para valorar la calidad ambiental del sitio sin proyecto, por lo que existirán tres niveles de impacto:

- Nivel 1
- Nivel 2
- Nivel 3

Para la identificación y valoración de los impactos del presente proyecto la matriz utilizada para la etapa de construcción ha sido la siguiente:

ESTADO DEL PROYECTO	ACCIONES IMPACTANTES	EFECTOS	FACTOR AMBIENTAL AFECTADO	VALORACIÓN DEL IMPACTO
Construcción	Trabajos preliminares (limpieza y descapote)	Producción de polvo	Calidad del aire	2
		Producción de desechos	Calidad del aire	
		Producción de ruidos	Ruido	
		Riesgo de derrames de combustibles y grasas de la maquinaria	Suelo	
Construcción	Trabajos de construcción (incluye las obras de drenaje)	Producción de polvo	Calidad del aire	2
		Producción de ruidos	Ruidos	
		Riesgo de accidentes	Población	
		Desviación temporal o permanente de cursos de agua	Hidrología	
		Riesgo de destrucción de suelos de alta calidad edáfica y/o contaminación de suelos	Suelos	
		Impermeabilización de superficies	Suelos	
		Riesgo de contaminación de grasas y combustibles	Suelos	
		Riesgo de daño a la infraestructura pública o privada	Medio construido	
	Trabajos en bancos de préstamos	Alteración de geomorfología en bancos de préstamos	Geomorfología	3
		Riesgo de derrumbes o deslizamientos	Geomorfología	
		Riesgo de contaminación por derrames de combustible y grasas de la maquinaria	Hidrología	
		Destrucción de la vegetación	Vegetación	
		Riesgo de accidentes	Población	
		Producción de polvo	Calidad del aire	
		Producción de ruidos	Ruido	
		Intrusión visual del paisaje	Paisaje	
	Explotación de la infraestructura de rodamiento	Aumento de los niveles de emisión de contaminantes por incremento del tránsito de vehículos	Calidad del aire	2
		Incremento de los niveles de ruido por el aumento del tránsito de vehículos	Ruido	
		Riesgo de cambio en la calidad de las aguas superficiales por los residuos del tránsito de vehículos	Hidrología	
		Aumento del riesgo de accidentes del tránsito	Salud	
		El proyecto impacta positivamente la economía local al mejorar la accesibilidad	Calidad de vida	
		El proyecto impacta positivamente la economía local al mejorar la accesibilidad	Economía	
VALOR MEDIO DE IMPORTANCIA				2.25

4.3. PROGRAMA DE MITIGACIÓN DE LOS IMPACTOS AMBIENTALES GENERADOS POR EL PROYECTO

El programa de mitigación tiene por objeto prevenir los efectos adversos de los impactos ambientales negativos generados por el proyecto, así como definir el o los responsables de la ejecución de las medidas y determinar el costo en que se incurre por prevenir ese efecto adverso.

La siguiente matriz muestra el programa de mitigación del presente proyecto:

ACCIONES IMPACTANTES	EFECTOS	MEDIDAS DE MITIGACIÓN	COSTO DE LA MEDIDA	RESPONSABLE POR EL CUMPLIMIENTO DE LA MEDIDA
Trabajos preliminares (limpieza y descapote)	Producción de polvo	Humedecimiento de la tierra	Indirecto	Contratista
	Producción de desechos	Selección del sitio receptor de los desechos, recopilación, transporte y producción de los desechos	Directo	Dueño de la inversión
	Producción de ruidos	Regulación de horarios	Indirecto	Contratista
	Riesgo de derrames de combustible y grasas de la maquinaria	Selección del sitio apropiado para mantenimiento de maquinaria	Indirecto	Contratista
Trabajos de construcción (incluye las obras de drenajes)	Producción de polvo	Humedecimiento de la tierra	Indirecto	Contratista
	Producción de ruidos	Control de horarios, desvíos de circulación de quipos y vehículos	Indirecto	Contratista
	Modificación de la calidad de las aguas	Mantener adecuada compactación y protección contra el arrastre de materiales, producir adecuado drenaje provisional	Indirecto	Contratista
	Desviación temporal o permanente de cursos de agua	Realizar balsas temporales	Indirecto	Contratista
	Impermeabilización de superficies	Evitar movimientos innecesarios de la maquinaria	Indirecto	Contratista
		Mantener adecuado drenaje		
	Riesgo de accidentes	Señalización y control de tráfico	Indirecto	Contratista
	Riesgo de contaminación de grasas y combustibles	Selección de sitios para mantenimiento de la maquinaria y recolectar residuos grasas y combustibles	Indirecto	Contratista
	Riesgo de daño a la infraestructura pública o privada	Reparación de daños causados a la propiedad pública y/o privada	Indirecto	Contratista
Trabajos en bancos de préstamos (si fuera necesario)	Alteración de geomorfología en bancos de préstamos	Proporcionar el corte de taludes acorde al ángulo de reposo	Indirecto	Contratista
		Selección de sitios de apile	Indirecto	Contratista
		Evitar cortes innecesarios	Indirecto	Contratista
	Riesgo de contaminación por derrames de combustible y grasas de la maquinaria	Selección de sitios para mantenimiento de la maquinaria y recolectar residuos grasas y combustibles	Indirecto	Contratista
	Producción de polvo	Humedecimiento de superficies	Indirecto	Contratista
	Producción de ruidos	Control de horarios y mantenimiento de la maquinaria	Indirecto	Contratista

4.4. PROGRAMA DE CONTINGENCIAS ANTE RIESGOS

El programa de contingencias ante riesgos tiene el propósito de definir las acciones que deben realizarse para prevenir los efectos adversos de los desastres ante la presencia de un alto riesgo en el sitio.

En este caso el mayor riesgo se muestra en la posterior tabla:

DESCRIPCIÓN (Describir las características del riesgo, especificando la peligrosidad	MEDIDAS PREVENTIVAS O DE CONTINGENCIAS	RESPONSABLE POR EL CUMPLIMIENTO DE LA MEDIDA
HURACANES Daños a las obras de drenaje, con los consiguientes efectos: inundación, deslizamientos y desplomes	Muros de sostenimiento, refuerzo en caso de socavación de pilas	Autoridades Municipales
	Programa de Educación a la población	
	Planes de contingencia	

ANEJO Nº 14

ESTUDIO DE SEGURIDAD Y SALUD

ÍNDICE

Página

MEMORIA **5**

PLIEGO DE PRESCRIPCIONES TÉCNICAS PARTICULARES **39**

PLANOS **66**

PRESUPUESTO **86**

MEMORIA

ÍNDICE

Página

1. INTRODUCCIÓN 7

2. OBJETO DEL ESTUDIO 7

3. CARACTERÍSTICAS DE LA OBRA 7

3.1. PROMOTOR 7
3.2. DESCRIPCIÓN DE LAS OBRAS 7
3.2.1. CRITERIOS DE DISEÑO 7
3.3. PRESUPUESTO 8
3.4. PLAZO DE EJECUCIÓN. 8
3.5. PERSONAL PREVISTO. 8
3.6. UNIDADES CONSTRUCTIVAS QUE COMPONEN LA OBRA 8

4. EVALUACIÓN DE POSIBLES RIESGOS 9

4.1. EVALUACIÓN DE RIESGOS PROFESIONALES 9
4.2. EVALUACIÓN DE RIESGOS DE DAÑOS A TERCEROS 11
4.3. EVALUACIÓN DE RIESGOS CLIMATOLÓGICOS 11

5. PLAN DE EJECUCIÓN 11

5.1. EVALUACIÓN DE RIESGOS CATASTRÓFICOS 12

6. PREVENCIÓN DE RIESGOS 12

6.1. PROTECCIONES INDIVIDUALES. 12
6.2. PROTECCIONES COLECTIVAS. 13
6.3. PREVENCIÓN DE RIESGOS A TERCEROS. 13
6.4. PREVENCIÓN DE RIESGOS CLIMATOLÓGICOS 13
6.5. EVALUACIÓN DE RIESGOS CATASTRÓFICOS 13
6.6. FORMACIÓN 13

7. MEDIDAS FRENTE A CONTAMINANTES FÍSICOQUÍMICOS 14

7.1. EL POLVO 14
7.2. GASES, VAPORES Y HUMOS 14
7.2.1. PINTURAS, ESMALTES Y BARNICES POR PULVERIZACIÓN 14
7.2.2. HUMOS METÁLICOS DERIVADOS DE LAS OPERACIONES DE SOLDADURA ELÉCTRICA 14
7.3. RUIDOS 14
7.4. VIBRACIONES 14
7.5. RADIACIONES 14
7.6. RIESGO ELÉCTRICO 15

8. NORMAS DE SEGURIDAD EN LOS PROCESOS OPERATIVOS 15

8.1. NORMAS PARA LA EJECUCIÓN DE LAS UNIDADES DE OBRA 15
8.1.1. MOVIMIENTO DE TIERRAS 15
8.1.2. TRABAJOS CON HORMIGÓN 17
8.1.3. INSTALACIÓN DE MAQUINARIA. (MONTAJE DE EQUIPOS) 19
8.1.4. BASES Y SUB-BASES 20
8.2. NORMAS PARA EL MANEJO DE VEHÍCULOS Y MAQUINARIA 20
8.2.1. NORMAS GENERALES PARA TODO TIPO DE MAQUINARIA 20
8.2.2. EXCAVADORA 21
8.2.3. PALA CARGADORA 22
8.2.4. CAMIÓN BASCULANTE Y DUMPER 23
8.2.5. CAMIÓN HORMIGONERA 24
8.2.6. GRÚA AUTOPROPULSADA 25
8.2.7. COMPACTADOR 26
8.2.8. BULLDOZER 26
8.3. NORMAS PARA EL USO DE HERRAMIENTAS Y MEDIOS AUXILIARES 27
8.3.1. HERRAMIENTAS 27
8.3.2. SIERRAS CIRCULARES 29
8.3.3. COMPACTADOR DE BANDEJA Y PISTÓN 30
8.3.4. COMPRESOR 30
8.3.5. ESCALERAS DE MANO 31
8.3.6. MARTILLO ROMPEDOR 31
8.3.7. HORMIGONERA ELÉCTRICA 31
8.3.8. VIBRADORES 32
8.3.9. UTILIZACIÓN DE LA INSTALACIÓN ELÉCTRICA PROVISIONAL DE OBRA 32
8.3.10. SOLDADURA ELÉCTRICA 33
8.4. NORMAS PARA EL PERSONAL 33
8.4.1. MANDOS Y ENCARGADOS 33
8.4.2. PERSONAL DE OBRA 34
8.4.3. MANEJO DE CARGAS 34

9. MEDICINA PREVENTIVA Y PRIMEROS AUXILIOS 37

9.1. BOTIQUINES 37
9.2. ASISTENCIA A ACCIDENTADOS 37
9.3. RECONOCIMIENTOS MÉDICOS 37

10. INSTALACIONES PROVISIONALES DE HIGIENE Y BIENESTAR 37

11. PREVENCIÓN Y PROTECCIÓN DE INCENDIOS 38

12. LIBRO DE INCIDENCIAS 38

1. INTRODUCCIÓN

El presente documento está integrado dentro del **"PROYECTO DE PUENTE EN EL PASO DE BOPAL SOBRE EL RÍO GRANDE DE MATAGALPA (NICARAGUA)".**

Aunque la normativa nicaragüense no obliga a la inclusión de un anejo donde se realice un estudio de las medidas de prevención y mitigación de accidentes, se ha considerado oportuno incluir este Estudio de Seguridad y Salud en el proyecto, siguiendo normativa española, por la gran importancia y peso que tiene este anejo.

2. OBJETO DEL ESTUDIO

El presente Estudio de Seguridad y Salud establece, durante la ejecución de las obras previstas en el Proyecto, las previsiones de riesgos de accidentes y enfermedades profesionales, así como los derivados de las operaciones de reparación, conservación y mantenimiento, así como las instalaciones preceptivas de higiene y bienestar de los trabajadores.

El contenido de este estudio servirá para dar, a la empresa constructora que en su día será adjudicataria de las obras, unas directrices básicas para llevar a cabo sus obligaciones en el campo de la prevención de riesgos profesionales, facilitando su desarrollo bajo el control del equipo facultativo encargado de la dirección de las obras o en su caso del Coordinador en materia de seguridad y salud, de acuerdo con el Real Decreto 1627/1.997 por el que se establecen disposiciones mínimas de Seguridad y Salud en las obras de construcción y teniendo en cuenta la Ley 31/1.995 de Prevención de Riesgos Laborales y el R.D. 39/1.997 sobre Reglamento de Servicios de Prevención.

Con la elaboración de este "Estudio de Seguridad y Salud" y su posterior aplicación en obra a través del Plan, que basado en el mismo, redacte la empresa adjudicataria, se pretende conseguir los siguientes objetivos:

- Establecer unas Normas de Actuación basadas en el estudio de las características propias de la obra encaminadas a eliminar los riesgos técnicos derivados de los trabajos que se han de realizar y de las actuaciones humanas peligrosas, con el fin de reducir accidentes y consecuencias.
- Crear la Organización necesaria y dictar las Normas particulares que hagan aplicable en la práctica las Disposiciones Legales de carácter general existentes en materia de Seguridad y Salud en el trabajo.
- Cumplirlas Instrucciones y Normas sobre Seguridad y Salud en el Trabajo.

3. CARACTERÍSTICAS DE LA OBRA

3.1. PROMOTOR

El promotor del presente proyecto es el Ministerio de Transporte e Infraestructura.

3.2. DESCRIPCIÓN DE LAS OBRAS

La descripción pormenorizada de las obras se encuentra desarrollada en la "Memoria" del presente Proyecto.

3.2.1. CRITERIOS DE DISEÑO

El presente proyecto es el resultado de la interacción de criterios hidráulicos, estructurales, económicos y medioambientales, teniendo presentes las limitaciones que provoca la presencia del Río Grande de Matagalpa y sus grandes variaciones de caudal en función de la época del y las afecciones que se provocan al tráfico rodado de la zona.

El proyecto define las siguientes actuaciones:

- Dimensionamiento de un puente que permita cruzar el Río Grande de Matagalpa con seguridad, teniendo en cuenta en su dimensionamiento las grandes crecidas que han causado la ruina de puentes en la zona.
- Demolición del actual, debido a sus problemática con las nombradas crecidas.

3.3. PRESUPUESTO

El presupuesto de ejecución material del proyecto asciende a la cantidad de: 97791913.64 C$, NOVENTA Y SIETE MILLONES SETECIENTOS NOVENTA Y UN MIL NOVECIENTOS TRECE CÓRDOBAS CON SESENTA Y CUATRO CENTAVOS.

3.4. PLAZO DE EJECUCIÓN.

El plazo de ejecución previsto del proyecto PUENTE EN EL PASO DE BOPAL SOBRE EL RÍO GRANDE DE MATAGALPA (NICARAGUA) será de 9 meses.

3.5. PERSONAL PREVISTO.

El personal previsto durante la ejecución de la obra es de 20 trabajadores.

3.6. UNIDADES CONSTRUCTIVAS QUE COMPONEN LA OBRA

Las obras a realizar se desglosan en los siguientes apartados:

- Demoliciones y movimiento de tierras.
- Canalización del río.
- Replanteo.
- Construcción de la subestructura del puente.
    - Ejecución de pilotes in situ.
    - Ejecución de zapatas y encepados:
        - Encofrado
        - Ferrallado
        - Hormigonado
        - Desencofrado
    - Ejecución de estribos:
        - Encofrado
        - Ferrallado
        - Hormigonado
        - Desencofrado
- Construcción de la superestructura del puente
    - Ejecución de pilas
        - Encofrado
        - Ferrallado
        - Hormigonado
        - Desencofrado
    - Ejecución del arco:
        - Cimbrado
        - Ferralado
        - Hormigonado
        - Descimbrado
    - Ejecución del tablero:
        - Cimbrado
        - Ferrallado
        - Hormigonado
        - Descimbrado
        - Impermeabilización
        - Pavimentación
- Señalización

4. EVALUACIÓN DE POSIBLES RIESGOS

4.1. EVALUACIÓN DE RIESGOS PROFESIONALES

- En desbroce y demoliciones:
    - Atropello por máquina y vehículos
    - Vuelcos y caídas por terraplenes
    - Colisiones
    - Vibraciones por manejo de maquinaria
    - Golpes y proyecciones
    - Caídas a distinto nivel y altura
    - Contacto con las líneas eléctricas
    - Polvo
    - Ruido
    - Caída de los materiales de los camiones

- En replanteo:
    - Atropellos causados por maquinaria y vehículos
    - Caídas a igual o a diferente nivel
    - Golpes y proyecciones
    - Polvo
    - Ruido

- En movimientos de tierras:
    - Atropellos causados por maquinaria y vehículos
    - Caídas a igual o a diferente nivel
    - Caídas de materiales y objetos
    - Golpes y proyecciones
    - Deslizamiento de las tierras
    - Polvo
    - Ruido

- Ejecución de pilotes
    - Golpes con objetos
    - Caídas al mismo nivel
    - Caídas a distinto nivel
    - Ahogamiento de personas por caídas al agua
    - Hidrocuciones
    - Electrocución
    - Asfixia en trabajos de buceo
    - Cortes, punturas, rozaduras, etc. En el manejo de cables y otras piezas y herramientas

- En excavaciones:
    - Caídas a igual o a diferente nivel
    - Caídas de materiales y objetos
    - Golpes y proyecciones
    - Caída de materiales encima del operario
    - Atropello causado por maquinaria y vehículos
    - Sobreesfuerzo
    - Polvo
    - Ruido

- Encofrado y desencofrado.
    - Desprendimiento por el mal apilado de la madera.
    - Golpes en las manos.
    - Riesgos de incendio.
    - Caídas de trabajadores al andar por el borde de los encofrados.
    - Cortes al utilizar la mesa de sierra circular.
    - Sobreesfuerzos por posturas inadecuadas.

- Golpes en la cabeza.
- Contactos con el cemento.
- Pisadas sobre objetos punzantes.
- Golpes por caída de objetos.

- Ferrallado.
  - Cortes y heridas en manos, piernas y pies, por manejo de redondos de acero corrugados.
  - Aplastamientos de manos o pies en operaciones de carga y descarga.
  - Tropiezos y torceduras al caminar entre las parrillas, o sobre ferralla en fase de montaje.
  - Accidentes por eventual rotura de los hierros, durante el estirado.
  - Caída desde altura durante el montaje de nervios y armaduras.
  - Caída de armaduras montadas durante su transporte.
  - Pisadas sobre objetos punzantes y/o cortantes.

- Hormigonado.
  - Caída de objetos.
  - Caída del personal al mismo nivel.
  - Caídas a distinto nivel.
  - Hundimientos.
  - Pinchazos y golpes contra obstáculos.
  - Pisadas sobre objetos punzantes.
  - Trabajos sobre pisos húmedos o mojados.
  - Contactos con el hormigón.
  - Desplome de paredes de zanjas o vaciados.
  - Atrapamientos.
  - Vibraciones por manejo de la aguja vibrante.
  - Ruido puntual y ambiental.
  - Electrocución.
  - Aplastamiento por reventón de los encofrados.
  - Contacto con desencofrantes.
  - Interferencias con conducciones o servicios subterráneos
  - Inundación

- Medios auxiliares.
  - Caída al mismo nivel de personas.
  - Caídas a distinto nivel.
  - Caídas por fallo estructural del medio auxiliar.
  - Caídas de objetos desde altura sobre las personas.
  - Sobreesfuerzos durante el montaje y desmontaje.
  - Atrapamiento entre objetos.
  - Vuelco del medio auxiliar por viento o falta de arriostramiento.
  - Rotura por fatiga del material.
  - Rotura por sobrecarga.
  - Caída por mal anclaje.

- Maquinaria de obra.
  - Vuelcos de la máquina.
  - Choque entre máquinas o con otros vehículos.
  - Atropello de personas.
  - Interferencias con: Conducciones subterráneas de agua. Tendido eléctrico.
  - Caída del maquinista al subir o bajar de la máquina. Polvo ambiental.
  - Ruido.
  - Vibraciones.
  - Derivados del mantenimiento de la máquina: quemaduras, electrocuciones, atrapamientos o golpes con las partes móviles de la máquina, caídas al mismo nivel, explosiones de los neumáticos al darles presión, explosión por trasiego de combustible.

4.2. EVALUACIÓN DE RIESGOS DE DAÑOS A TERCEROS

Vendrán producidos por la circulación de terceras personas ajenas a la obra en las proximidades de la misma:

- Caídas al mismo nivel.
- Caídas a distinto nivel.
- Caídas de objetos y materiales.
- Atropellos.
- Polvo.
- Ruido.

4.3. EVALUACIÓN DE RIESGOS CLIMATOLÓGICOS

Los riesgos a tener en cuenta debido a los fenómenos meteorológicos son:

- Niebla
- Viento
- Lluvia
- Frío y calor

5. PLAN DE EJECUCIÓN

En la redacción del contenido del Estudio de Seguridad y Salud, art. 5 del R.D.1627, propone en su apartado a), la obligación de incluir un plan de ejecución de obra en el que se redacte en términos generales la secuencia de ejecución de la obra con los condicionantes derivados de la prevención de riesgos en los trabajos, que por tanto desarrollamos a continuación:

- En primer lugar, se procederá a la realización del montaje o acondicionamiento de las preceptivas instalaciones de Higiene y Bienestar.
- Comenzaremos por acotar el recinto que ocupan las diferentes actuaciones con el preceptivo cerramiento provisional y a colocar la señalización de seguridad y salud que exige el R.D. 485/97, advirtiendo de las prohibiciones, obligaciones, existencia de riesgos, impidiendo así, el acceso de terceras personas.
- Apoyándonos en la información obtenida del Plan de Seguridad y Salud de la obra y del proyecto de ejecución, en cuanto a posibles interferencias con servicios afectados, previa supervisión y localización "in situ" de los mismos, se procederá a la instalación de la señalización oportuna e instalación de los medios de protección colectiva previstos (pórticos de limitación de gálibo, cortes en el suministro del servicio, desviación del mismo, señalización, encauzamiento y ordenación del tráfico, etc.), eliminando así, los riesgos derivados de dichas interferencias.

Se respetarán las normas de seguridad para trabajos con maquinaria de movimiento de tierras, se guardarán las distancias de seguridad al borde de excavación, señalizando y colocando protecciones contra el riesgo de caídas para el personal, como cinta de balizamiento, barandillas, pasarelas de seguridad, y provisión de escaleras que cumplan la normativa, colocadas de forma accesible al personal para una rápida salida en caso de emergencia. En el caso de que se utilicen en esta unidad martillos neumáticos, se respetarán las normas de trabajo seguro y se hará uso del equipo completo de seguridad individual.

En lo que respecta al hormigonado de cimientos y estructuras, así como a la colocación de prefabricados, se seguirán las normas de seguridad y métodos de trabajos específicos para el manejo de hormigón, encofrado y ferrallado, separando las cargas del borde de la excavación, manteniendo la protección contra caídas a distinto nivel y refuerzos para la estabilidad de los taludes, haciendo uso de topes y preparando plataformas seguras de trabajo, tanto para el personal como para la maquinaria.

También se respetarán las normas de seguridad y métodos de trabajo de la maquinaria: hormigoneras, bombas de hormigonado, camiones grúas etc., haciéndose especial hincapié en el cumplimiento de las normas de seguridad sobre manejo de prefabricados, dirigidas tanto al personal como a los maquinistas.

Se mantendrá el orden y la limpieza durante las tareas en el lugar de trabajo, respetando las zonas de paso, ya que se suceden e incluso se solapan tareas de diferentes oficios en un mismo lugar o en lugares muy próximos con el inconveniente que esto significa. En todos estos trabajos que se deban realizar en alturas, se instalarán plataformas seguras de trabajo con las debidas protecciones.

Se llevará un control estricto de la simultaneidad de la ejecución de diferentes unidades de obra o de tajos de trabajo en el tiempo y en espacios próximos, de forma que esto no influya en la seguridad de la ejecución de las labores, debido a las posibles interferencias de unas sobre otras.

Al ejecutarse la obra en la cercanía a un núcleo urbano se pondrá especial interés en la señalización, balizamiento y defensa de los mismos de cara a terceras personas, así como en aminorar la producción de ruido, polvo y vibraciones, en prevención de accidentes.

5.1. EVALUACIÓN DE RIESGOS CATASTRÓFICOS

Los riesgos a tener en cuenta debido a fenómenos catastróficos son:

- Seísmo
- Desbordamiento o crecidas de ríos

6. PREVENCIÓN DE RIESGOS

En este apartado se describen las medidas preventivas: protecciones técnicas y normas, que nos permiten controlar y reducir los riesgos laborales que derivan de los trabajos a ejecutar en esta obra.

La prevención de riesgos profesionales exige, por un lado, el empleo de protecciones individuales y colectivas, y por otro lado, una continua labor de formación del personal de obra, de forma que cada trabajador conozca perfectamente los riesgos que conlleva la función que él desempeña, y sepa poner en práctica las oportunas medidas preventivas para garantizar su seguridad personal y en su caso, la colectiva.

También es fundamental establecer, por parte del contratista adjudicatario, un sistema de señalización de seguridad en cualquiera de los centros de trabajo afectados a la obra en cuestión, al efecto de llamar la atención de forma rápida e inteligible sobre objetos y situaciones susceptibles de provocar peligros determinados, así como para indicar el emplazamiento de dispositivos y equipos que tengan importancia desde el punto de vista de la seguridad. Se acatará lo dispuesto por el Real Decreto 485/1997 del 14 de abril, sobre disposiciones mínimas en materia de señalización de Seguridad y Salud en el trabajo y en su caso lo dispuesto en la norma de carreteras 8.3-IC sobre señalización de obras.

6.1. PROTECCIONES INDIVIDUALES.

Según se establece en el Real Decreto 773/97 de 30 de mayo, en el marco de la Ley 31/1995, de 8 de noviembre de Prevención de Riesgos Laborales las disposiciones mínimas de seguridad y de salud para la elección, utilización por los trabajadores en el trabajo y mantenimiento de los equipos de protección individual.

Cascos: para todas las personas que participan en la obra, incluidos visitantes. Guantes de uso general. Guantes de goma. Guantes de soldador. Guantes dieléctricos. Botas de agua. Botas de seguridad de cuero. Botas dieléctricas. Monos o buzos. Trajes de agua. Gafas contra impacto y antipolvo. Gafas para oxicorte. Equipo de protección de soldador. Mascarilla antipolvo. Mascarilla contra agentes químicos. Protectores auditivos. Cinturón antivibratorio. Chalecos reflectantes. Cinturón de seguridad de sujeción. Cinturón de seguridad anticaídas. Cinturón antivibratorio. Protección de manos para punteros. Linterna de seguridad.

6.2. PROTECCIONES COLECTIVAS.

Vallas de limitación y protección. Señales normalizadas de tráfico. Señales normalizadas de peligro, advertencia y prohibición. Cinta de balizamiento. Tapas de madera para el cubrimiento de posibles huecos horizontales. Extintores. Interruptor diferencial. Toma de tierra. Transformadores de corriente a 24 V. Válvulas antiretroceso. Escalera de seguridad. Pasarela de seguridad. Topes para camiones. Camión de riego. Señalista circulación interna y de terceros. Empalizada de protección contra desprendimientos. Brigada de seguridad para mantenimiento y reposición de medios. Pórtico limitación de altura. Jalón de señalización. Señales normalizadas de tráfico. Señal manual a dos caras. Conos. Balizas luminosas.

6.3. PREVENCIÓN DE RIESGOS A TERCEROS.

Se deberán tomar una serie de medidas orientadas a prevenir el posible riesgo originado por la presencia de terceras personas y que podremos resumir en las siguientes:

- Señales correspondientes al código de circulación. Situadas en zona de acceso que indiquen zona de obra, precaución, limitaciones de velocidad, salida de camiones y trabajos con maquinaria etc.
- Carteles informativos de obra y de prohibición.
- Cartel de prohibido el paso a personal ajeno a la obra.
- Señales de seguridad en el interior de obra, en cumplimiento del R.D. 485/1997 del 14 de abril.

6.4. PREVENCIÓN DE RIESGOS CLIMATOLÓGICOS

Se deberán tomar una serie de medidas orientadas a prevenir los posibles riesgos a tener en cuenta debido a los fenómenos meteorológicos son:

- Niebla: Cuando sea muy intensa, se evitará realizar trabajos que precisen buena visibilidad, o si es necesario serán suspendidos. En cualquier caso se utilizarán focos y luces, así como ropas de alta visibilidad. Se deberá saber cuándo detener los trabajos por causa de niebla intensa.
- Viento: Cuando el viento sea muy intenso, se pondrán a resguardo aquellos materiales, máquinas o herramientas que puedan ser levantados o arrastrados, y los trabajadores se protegerán los ojos con gafas protectoras.
- Lluvia: SI la lluvia impide el normal desarrollo de los trabajos se suspenderán los mismos. En cualquier caso se utilizarán ropas de alta visibilidad e impermeables y botas de caña alta. Cuando la lluvia cese, se drenarán las zanjas afectadas y se revisará el estado de los taludes.
- Frío y calor: Los trabajadores se protegerán adecuadamente contra el calor y con ropa de abrigo para las bajas temperaturas. Cuando las condiciones de trabajo lo requieran, se limitará la permanencia de los trabajadores, estableciéndose turnos o interrumpiendo las actividades si fuese preciso. Se prohibirá el realizar hogueras.

6.5. EVALUACIÓN DE RIESGOS CATASTRÓFICOS

Se deberán tomar una serie de medidas orientadas a prevenir los posibles riesgos a tener en cuenta debido a fenómenos catastróficos son:

- Seísmo: Los trabajadores evitarán las alturas y se alejarán de toda zona proclive a la caída de objetos. Se buscarán lugares amplios y libres de construcciones, grúas, maquinaria, árboles, y en ningún caso han de perder la calma.
- Desbordamiento o crecidas de ríos: En este caso se procurará alejarse lo más rápidamente posible de las márgenes del río, buscando zonas y lugares en altura que no presenten un peligro para los trabajadores aun cuando el nivel del agua aumente considerablemente.

6.6. FORMACIÓN.

Todo el personal debe recibir, al ingresar en la obra, una exposición de los métodos de trabajo y los riesgos que esto pudieran entrañar, juntamente con las medidas de seguridad que deberá emplear.

Dicha documentación le será entregada a modo de fichas a cada uno de los operarios que estén en obra dependiendo de las funciones que vayan a desempeñar, y cuantas especificaciones le afecten de las contenidas en los documentos de la presente Memoria. Así mismo, deberá tenerse en cuenta lo especificado en el Pliego de Condiciones Técnicas y Particulares de este Estudio de S.S.L.

7. MEDIDAS FRENTE A CONTAMINANTES FÍSICOQUÍMICOS

7.1. EL POLVO

Su prevención en trabajos de larga duración se realizará mediante protecciones colectivas que palien o eliminen en su origen el foco contaminante, empleándose según el proceso determinado, instalaciones especiales con métodos de: Captación, Filtraje, Sedimentación por vía húmeda, Ciclones, Extractores, Ventiladores, Renovadores de ambiente, etc.

Para casos puntuales o en defecto circunstancial de estos sistemas se emplearán protecciones individuales mediante mascarillas o equipos autónomos de respiración adecuados y estudiados de acuerdo con proceso productivo concreto.

7.2. GASES, VAPORES Y HUMOS

7.2.1. PINTURAS, ESMALTES Y BARNICES POR PULVERIZACIÓN

Se procurará utilizar productos en cuya composición se hayan eliminado en todo, o en parte, las citadas sustancias tóxicas.

7.2.2. HUMOS METÁLICOS DERIVADOS DE LAS OPERACIONES DE SOLDADURA ELÉCTRICA

No serán objeto de medidas especiales de prevención cuando los trabajos de soldadura se realicen al aire libre. En el caso de que se efectúen en recintos cerrados se observarán las mismas precauciones que en el caso anterior, llegando incluso a instalar, si fuese necesario, un dispositivo de extracción localizada. Con independencia de lo anteriormente expuesto, debe tenerse en cuenta que durante el proceso de soldadura se solapan normalmente distintos efectos contaminantes (humos metálicos, polvos, gases y vapores, ruidos y vibraciones, radiaciones etc.) para los que es preciso efectuar un Estudio de Seguridad adaptado al proceso de ejecución concreto de que se trate.

7.3. RUIDOS

Para la protección de los trabajadores frente a los riesgos derivados de la exposición al ruido en el ambiente de trabajo se aplicará lo dispuesto en el R.D. 1316/89, de 27 de octubre, es decir, se realizarán las mediciones pertinentes y en función de los resultados de estas mediciones se aplicaran las medidas correctoras y protectoras que dispone el R.D.

7.4. VIBRACIONES

La erradicación del riesgo depende en gran medida de las mejoras técnicas que puedan incorporarse como resultado de un tratamiento integral del ruido y de las vibraciones. En ausencia de criterios más concretos, se equipará con cinturones antivibratorios a los operados expuestos a posibles movimientos vibratorios de frecuencia inferior a 100 Hz.

7.5. RADIACIONES

En el caso de que, dentro de una zona de las obras, exista riesgo de exposición dentro del campo de alcance de algún foco emisor de radiaciones ionizantes, se tomarán las medidas necesarias para que el personal de obra se encuentre, de manera permanente lo más alejado posible del foco emisor, llegando a interponer barreras compactas constituidas por materiales fuertemente absorbentes (plomo, hormigón, etc.), si fuese necesario.

El personal especializado que por motivos imperativos, deba acercarse y/o manipular el foco emisor deberá ir perfectamente equipado con buzo de seguridad, mandiles, guantes y manguitos especiales antionizantes, debiendo limitarse su tiempo de exposición en función de la naturaleza del foco emisor y las instrucciones dictadas por la reglamentación vigente, en uso.

7.6. RIESGO ELÉCTRICO

Métodos de prevención:

Los métodos de prevención se adoptarán con objeto de prevenir los contactos eléctricos, con el fin de evitar que circule por la persona corrientes peligrosas, para lo cual se actuará modificando o controlando los valores de los cuatro parámetros que definen el riesgo eléctrico (tensión, resistencia, tiempo de exposición, intensidad) tratando de alcanzar los siguientes objetivos:

- Disminución de la tensión aplicada (tensiones menores de 15 V., ó 45 V., según los casos).
- Aumento de la resistencia que ofrece el cuerpo humano (Aislamiento).
- Disminución del tiempo de actuación de la corriente sobre el cuerpo humano (mediante el seccionamiento del circuito con interruptor diferencial y/o magnetotérmico).
- Imposibilidad de que exista el contacto eléctrico (Doble aislamiento).
- Imposibilidad de que circule por el cuerpo humano corriente alguna (interruptor del circuito de retomo: Centro de la estrella o grupo de transformación o equipo generador, transformador con separación de circuitos, etc.)

8. NORMAS DE SEGURIDAD EN LOS PROCESOS OPERATIVOS

Se exponen a continuación diversas normas de seguridad a seguir tanto durante la ejecución de las diversas unidades de obra como en el empleo de la diversa maquinaria y medios auxiliares.

8.1. NORMAS PARA LA EJECUCIÓN DE LAS UNIDADES DE OBRA

8.1.1. MOVIMIENTO DE TIERRAS

Precauciones generales.

Antes de realizar el desbroce de los terrenos será preciso reconocer los mismos antes de meter las máquinas pesadas, para que estas no caigan en socavones.

Los árboles, de existir e interferir los trabajos, deben ser talados mediante motosierra, se avisará antes de proceder al derribo de cada árbol, para que no permanezca ningún trabajador bajo zona de caída del mismo. Una vez talados, mediante anclaje al escarifícador, se puede proceder sin riesgo al arranque del tocón, que deberá realizarse a marcha lenta para evitar el "tirón" y la proyección de objetos al cesar la resistencia.

Es imprescindible cuidar los caminos de circulación interna, cubriendo y compactando mediante escorias, zahorras, etc., todos los barrizales afectados por circulación interna de vehículos.

A medida que se avance el frente de excavación este se irá dejando con la inclinación del talud estable en función del tipo de material, limpio de piedras suspendidas, y de viseras inestables. Cuando esto no sea posible será obligatorio entibar dichos taludes

Si durante los trabajos se producen ambientes con polvo con lo que se pierda visibilidad o resulten perjudiciales para la salud, se hará necesario el regar periódicamente los tajos.

Si la excavación se realiza mediante retroexcavadora:

En primer lugar, el maquinista deberá observar las precauciones de que se le hace entrega. En segundo lugar, el personal que deba trabajar conjuntamente con la maquinaria deberá tener en cuenta que está totalmente prohibido acceder al terreno comprendido en el radio de acción de la máquina.

No se permitirá el transporte de personas por maquinaria de movimiento de tierras, a no ser que esta lleve un asiento habilitado para tal efecto.

Estará totalmente prohibido el realizar mediciones ni replanteos en las zonas donde estén trabajando máquinas de movimiento de tierras hasta que estén paradas y en lugar seguro que no ofrezcan riesgo de vuelcos o desprendimiento de tierras.

Siempre que sea necesario que las maniobras de la maquinaria de movimiento de tierras y camiones sean dirigidas por un señalista. Este se hará visible mediante su ropa de trabajo, accesorios reflectantes y señales, respetará las distancias de seguridad a las máquinas y camiones y se hará uso del casco de protección.

Si en la excavación se usan martillos neumáticos:

Antes de iniciar los trabajos, los tajos serán inspeccionados por el Capataz, que dará la orden de comienzo.

Se recomienda prohibir trabajos en torno al martillo neumático en funcionamiento a distancias inferiores a 5 m., para evitar riesgos innecesarios. Se prohíbe situar obreros trabajando en cotas inferiores bajo un martillo neumático en funcionamiento, en prevención de accidentes por derrumbamiento.

Los empalmes y las mangueras de presión de los martillos neumáticos se revisarán al inicio de cada período de rompimiento, sustituyendo aquellos, o los tramos de aquellos, defectuosos o deteriorados.

Se procurará que los taladros efectúen a sotavento en prevención de exposiciones innecesarias a ambientes polvorientos.

El personal a utilizar los martillos conocerá el perfecto funcionamiento de la herramienta, la correcta ejecución del trabajo y los riesgos propios de la máquina. Se prohíbe dejar el puntero hincado al interrumpir el trabajo. Se prohíbe abandonar el martillo o taladro manteniendo conectado el circuito de presión.

Queda prohibido utilizar martillos de presión rompedores dentro del radio de acción de la maquinaria para el movimiento de tierras y/o excavación.

Los tajos con riesgo de caída desde altura se ejecutarán sujeto con el cinturón de seguridad a un punto firme y sólido de terreno (medio natural o construido ex profeso).

Se eliminarán los árboles ubicados al borde de taludes que deban soportar vibraciones de martillos neumáticos, en prevención de accidentes por vuelco de troncos.

Excavación en zanja:

Antes del comienzo de los trabajos es preciso conocer como mínimo:

- Es importante que el encargado de la obra sea informado de las características técnicas del terreno que deben estar definidas en el proyecto, como son: talud natural, capacidad portante, nivel freático, contenido de humedad, posibilidad de filtraciones, estratificaciones, si el terreno ha sido alterado de alguna forma anteriormente etc.
- Proximidad de edificaciones y características de sus cimentaciones, así como posibles sobrecargas en las proximidades de las paredes de la excavación.
- Existencia de fuentes de vibraciones (carreteras, máquinas, etc.).
- Existencia y/o proximidad de instalaciones de agua, gas, electricidad, alcantarillado, línea telefónica, etc.

El personal que haya de trabajar en el interior de zanjas, conocerá los riesgos a los que puede estar sometido.

El acceso y salida del personal a la zanja se efectuará por medio de escaleras de mano sólidamente ancladas al borde superior de la zanja, sobre pasando a la altura de éste en al menos 1,00 m.

Quedan prohibidos los acopios (tierras, materiales, tubos, etc.), a una distancia inferior a 2,00 m. del borde de la zanja. Esta altura podrá variar, en función de las características del terreno y de la profundidad de la zanja. Si las características del terreno o la profundidad de la zanja lo exigieran, se procederá a su entibación al objeto de prevenir desprendimientos del terreno.

Toda zanja, mientras permanezca abierta, se mantendrá protegida con barandilla rígida en el borde, en todas aquellas zonas en que existan pasos de personal y, señalizada con cordón de balizamiento, en el resto de su longitud.

Para pasos de personal sobre zanjas abiertas, se instalarán pasarelas de anchos mínimos 1,00 m., protegidos con barandillas rígidas y resistentes de al menos 1,00 m. de altura.

Taludes máximos permitidos:

a) En roca - 80 grados
b) En terrenos compactos - 50 grados
c) En terrenos blandos pero resistentes - 45 grados
d) En terrenos movedizos o desmoronables - 20 grados

Como esto resulta antieconómico y muchas ocasiones inviable será preciso entibar las paredes de la zanja, siendo absolutamente obligatorio a partir de una profundidad de 1,2 m. e incluso antes en caso de terrenos sueltos y poco estables.

Condiciones generales de una entibación de zanja:

- La profundidad máxima permitida sin entibar en el origen de la zanja, supuesto que el terreno sea suficientemente estable, no será superior a 1,20 m.; no obstante debe protegerse la zanja con un cabecero.
- La altura máxima sin entibar, en fondo de zanja (a partir de 1,40 m.) no superará los 0,70 cm., aún cuando el terreno sea de buena calidad.
- Aún cuando los paramentos de una excavación sean aparentemente estables, se entibarán siempre que se prevea el deterioro del terreno, como consecuencia de una larga duración de abertura.
- El material previsto para llevar a cabo la entibación debe estar a pie de obra en cantidad suficiente.
- El diámetro de los rollizos no debe ser inferior a 10 cm. en punta, para las excavaciones más estrechas, y entre 12 y 14 cm., si la excavación está comprendida entre 0,80 y 1,80 m.

Rellenos:

Señalar los bordes de terraplenes para evitar una aproximación excesiva que provoque un asentamiento elevado de las tierras.

Para las operaciones de vertido del material por los camiones, es preciso que algún auxiliar se encargue de indicar el sitio en que cada camión deba verter. Máxime cuando este se hace al borde del talud y se ha alcanzado cota suficiente. El personal que dirige las operaciones de descarga debe retirarse de los laterales antes que el vehículo comience a vascular.

Igualmente sucede en las operaciones de nivelado del terraplén con la máquina motoniveladora, los trabajadores auxiliares deberán permanecer fuera del radio de peligro de la máquina en movimiento, estará terminantemente prohibido el subirse a alguna de las partes de la máquina para ser transportados en el avance la zona de trabajo. El maquinista de la motoniveladora por su lado pondrá especial atención en su trabajo y mantendrá en buen estado los dispositivos acústicos de aviso marcha atrás, las luces y los espejos retrovisores.

Cuando se construyan terraplenes estrechos con máquinas pesadas conviene mantener los bordes más elevados que el centro y señalizar la zona estable, para que las máquinas no caigan resbalando.

8.1.2. TRABAJOS CON HORMIGÓN

Encofrado y desencofrado.

Se prohíbe expresamente que permanezca ningún operario, en la zona de batida de carga, durante la operación de izado de madera o piezas de encofrado con camión-grúa.

El ascenso y descenso del personal a los encofrados se realizará por medio de escalera de manos reglamentaria. Los clavos existentes en la madera ya usada se sacarán o se

remacharán inmediatamente después de haber desencofrado, retirando los que pudieran haber quedado sueltos por el suelo.

El acopio de madera, tanto nueva como usada, debe ocupar el menor espacio posible, estando debidamente clasificada y no estorbando las zonas de paso.

Puntales:

Los puntales se acopiarán ordenadamente por capas horizontales de un único puntal en altura y fondo el que desee, con la única salvedad de que cada capa se disponga de forma perpendicular a la inmediata inferior. Se prohíbe tras el desencofrado el amontonamiento irregular de los mismos.

La estabilidad de las torretas de acopio de puntales, se asegurará mediante la hinca de "pies derechos" de limitación lateral. Los puntales se izarán a las plantas en paquetes uniformes sobre bateas.

Los puntales de tipo telescópico se transportarán a brazo u hombro con los pasadores y mordazas instaladas en posición de inmovilidad de la capacidad de extensión o retracción de los puntales.

Los tablones durmientes de apoyo de los puntales que deben trabajar inclinados con respecto a la vertical serán los que se acuñarán. Los puntales siempre apoyarán de forma perpendicular a la cara del tablón.

Los puntales de clavarán a los durmientes y a la sopanda, para conseguir una mayor estabilidad. Los puntales de madera deberán:

- Ser de una sola pieza, en madera sana, preferiblemente sin nudos y seca.
- Estar descortezados con el fin de poder ver el estado real del rollizo.
- Tener la longitud exacta para el apeo en el que se les instale.
- Ser acuñados con doble cuña de madera superpuesta en la base clavándose entre sí.
- Preferiblemente no se emplearán para recibir solicitaciones a flexión.
- Se prohíbe el empalme con tacos de los puntales de madera.
- Todo puntal agrietado se rechazará para el uso de transmisión de carga.

Los puntales metálicos:

- Tendrán la longitud adecuada para la misión a realizar.
- Estarán en perfectas condiciones de mantenimiento. Carecerán de deformaciones en el fuste.
- Los tomillos sin fin los tendrán engrasados.
- Estarán dotados en sus extremos de las placas para apoyo y clavazón.

<u>Ferrallado.</u>

Durante la descarga de las barras, se evitará que los paquetes de hierro pasen por encima del personal.

El izado de paquetes de armaduras, en barras sueltas o montadas, se hará suspendiendo la carga en dos puntos separados, lo suficiente para que la carga permanezca estable, evitando la permanencia o paso de personas bajo cargas suspendidas. Sólo se permitirá el transporte vertical para la ubicación exacta “in situ".

Las barras se almacenarán ordenadamente y no interceptarán los pasos, que se establecerán sobre durmientes por capas ordenadas de tal forma que sean evitados los enganches fortuitos entre paquetes.

Los desperdicios y recortes se amontonarán y eliminarán de la obra lo antes posible vertiéndolos sobre bateas destinadas a este fin.

Se pondrán sobre las parrillas planchas de madera, a fin de que el personal no pueda introducir el pie al andar por encima de estas.

Las maniobras de ubicación "In situ" de armaduras suspendidas, se ejecutarán por un mínimo de tres operarios: dos guiando con sogas en dos direcciones, mientras que el tercero procede manualmente a efectuar las correcciones de aplomado.

El taller de ferralla se ubicará de tal forma que, teniendo a él acceso la grúa, las cargas suspendidas no deben pasar por encima de los montadores.

Vertido de hormigón.

Hormigonado con canaleta:

Previamente al inicio del vertido del hormigón de camión hormigonera, se instalarán fuertes topes antideslizantes en el lugar donde haya de quedar situado el camión.

Los operarios no se situarán detrás de los camiones hormigonera en maniobras de marcha atrás; estas maniobras siempre deberán ser dirigidas desde fuera del vehículo por uno de los trabajadores. Tampoco se situarán en el lugar de hormigonado hasta que el camión hormigonera no esté en posición de vertido. Los camiones hormigonera no se aproximarán a menos de 2 m., de los cortes del terreno.

Se prohíbe el cambio de posición del camión hormigonera al mismo tiempo que se vierte el hormigón. Esta maniobra deberá efectuarse en su caso con la canaleta fija para evitar movimientos incontrolados.

Precauciones generales en el vertido:

Mientras se realiza el vertido, se prestará atención al comportamiento de los taludes para detectar los riesgos por vuelco.

Se mantendrán las zonas de trabajo limpias y ordenadas mediante una cuadrilla de limpieza.

Se habilitarán caminos de acceso a los tajos, estableciéndose pasarelas para poder atravesar las zanjas o caminos. Las pasarelas a más de 2 m., de altura estarán limitadas por barandillas.

Se hará una revisión previa de las excavaciones entibadas antes de proceder al vertido del hormigón.

Se señalizarán y protegerán las excavaciones con vallas metálicas o de madera, pintada a bandas amarillas y negras ubicadas a 2 m. del borde.

Antes del vertido del hormigón se revisará los encofrados en evitación de reventones o derrames innecesarios sobre trabajadores.

En todas las operaciones con riesgo de caídas de altura, es obligatorio el uso del cinturón de seguridad. El cinturón deberá amarrarse de forma que la longitud de caída libre no supere a los 1,5 metros. Si existiese peligro de caída de objetos o materiales a otro nivel inferior, se acotará la zona para impedir el paso.

Se tendrá especial cuidado en evitar las quemaduras que pudieran producirse al estar en contacto directo con las hormigoneras.

8.1.3. INSTALACIÓN DE MAQUINARIA. (MONTAJE DE EQUIPOS)

Se mantendrá la zona de trabajo limpia y ordenada.

Se retirarán lo antes posible, los materiales de embalaje para atenuar el riesgo de incendio. Si los embalajes fueran de madera se doblarán los clavos cm o medida preventiva para evitar pinchazos en los pies.

Se evitará la presencia de personas bajo cargas suspendidas o en la proximidad de éstas. Para trabajos en altura se utilizarán andamios o plataformas protegidas, llegando a utilizar cinturón de seguridad que se estimará conveniente y restringiéndose el empleo de escaleras de mano en la medida de lo posible.

Se comprobará el funcionamiento y buen estado de los elementos auxiliares de izado (cables, estrobos, eslingas, cáncamos, gatos, pull-lifts, etc.). Se verificarán que la capacidad de los medios de izado a utilizar son suficientes para el peso de la carga.

Se tomarán las precauciones previstas en el apartado de instalaciones eléctricas de alta y baja tensión, comprobando la ausencia de tensión en el conexionado de equipos. Así mismo se tomarán precauciones especiales, tanto en pruebas eléctricas como de funcionamientos de los equipos.

Se dispondrán extintores portátiles como medida para aminorar el riesgo de incendio.

8.1.4. BASES Y SUB-BASES

Corresponden a la ejecución de las capas de material "seleccionado" estabilizado con cemento, las capas de grava cemento y a las capas de zahorra artificial extendidas en el vial objeto del proyecto.

Los riesgos detectables en esta unidad de obra son de atropellos, vuelcos de máquinas y vehículos, caídas de vehículos y máquinas a distinto nivel, colisiones, inhalación de polvo y contactos eléctricos.

- Toda la maquinaria móvil empleada en el extendido y compactado estará dotada de avisador acústico de marcha atrás.
- Toda la maquinaria móvil en sus operaciones de aproximación y marcha atrás será guiada por un operario experto
- Se prohibirá la circulación de vehículos en pendientes pronunciadas y en la trayectoria perpendicular a las mismas.
- Se ordenará el tráfico interno de la obra.
- Se utilizarán señales claras, sencillas y uniformes.
- El cambio de las señalizaciones, y por lo tanto, la ordenación de la circulación se efectuará simultáneamente al avance de la obra.
- Si bien se habrá de impedir la existencia de cables eléctricos aéreos en la zona de trabajo y que en todo caso estarán protegidos con elementos resistentes que impidan el contacto con algún elemento de la obra en movimiento, los camiones que efectúen la descarga de materiales por volteo de la caja, no iniciarán su marcha en tanto la caja no esté en su posición normal de marcha.
- Durante la descarga de materiales de los carbones, el conductor del mismo permanecerá en el interior de la cabina.

Si existiese homologación expresa del Ministerio de Trabajo y SS, las prendas de protección personal a utilizar en esta obra, estarán homologadas.

- Casco de polietileno.
- Botas de seguridad.
- Mascarillas antipolvo con filtro mecánico.
- Guantes de cuero.
- Cinturón antivibratorio.

8.2. NORMAS PARA EL MANEJO DE VEHÍCULOS Y MAQUINARIA

8.2.1. NORMAS GENERALES PARA TODO TIPO DE MAQUINARIA

Los conductores y maquinistas poseerán el carnet que exija la normativa para su manejo, si la legislación vigente no lo exigiese, estos poseerán la experiencia suficiente para su manejo. En el caso de ser un aprendiz, este estará bajo el mando y la supervisión de un

experimentado maquinista, encomendándosele tareas cuya dificultad vaya aumentando conforme aumente su experiencia.

La maquinaria de movimiento de tierras y excavaciones, estarán equipadas con:

- Señalización acústica automática para la marcha atrás.
- Faros para desplazamientos hacia delante o hacia atrás.
- Servofrenos y frenos de mano.
- Retrovisores de cada lado.
- Extintor.

Ante la presencia de conductores eléctricos bajo tensión se impedirá el acceso de la máquina a puntos donde pudiese entrar en contacto.

Las operaciones de mantenimiento se realizarán con la máquina totalmente parada y habiéndose cerciorado de que los puntos calientes de la misma ya se han enfriado o de que se ha eliminado la presión interior.

Se deberán utilizar herramientas totalmente aislantes y se tendrá la precaución de no colocar herramientas sobre la batería para evitar la producción de cortocircuitos. No obstante, se llevará obligatoriamente un pequeño extintor en la máquina para caso de urgencia.

Cuando una máquina de movimiento de tierras esté trabajando, no se permitirá el acceso al terreno comprendido en su radio de trabajo; si permanece estática, se señalará su zona de peligrosidad actuándose en el mismo sentido. No se procederá a reparaciones sobre la máquina con el motor en marcha.

No se realizarán ni mediciones ni replanteos en las zonas donde estén trabajando máquinas de movimiento de tierras hasta que estén paradas y en lugar seguro que no ofrezcan riesgo de vuelcos o desprendimiento de tierra.

Se mantendrán limpios los accesos de la máquina de grasas, polvo o combustible, para evitar caídas al subir o bajar de la misma. El repostado de la máquina se realizará evitando la cercanía de focos calientes y realizando la posterior limpieza del posible combustible derramado.

Examinar la superficie del terreno y la clase de suelo de la zona de trabajo, para determinar los lugares o puntos peligrosos así como los posibles obstáculos existentes, determinando el mejor método operativo.

Es práctica habitual, cuando una máquina o camión queda atascado, el sacado utilizando otra máquina que tire de ella por medio de un cable, se hará que todos los presentes permanezcan fuera de la zona en que pudieran ser alcanzados por el cable en caso de rotura.

Si se circula por una obra en la que existan zanjas o terraplenes, no se hará a menos de dos metros de distancia de la cabeza del talud.

Se tiene la obligación de mantener las condiciones de seguridad que se exigen a la máquina, e impedir su utilización, cuando, directa o indirectamente se tenga conocimiento de que no ofrece las debidas garantías de seguridad para las personas o los bienes. Todas las máquinas se ajustarán a lo dispuesto en el R. D. 1495/1986, de 26 de mayo, por el que se aprueba el Reglamento de Seguridad de las Máquinas.

8.2.2. EXCAVADORA

Los caminos de circulación interna poseerán la pendiente máxima autorizada por el fabricante para la máquina. No se sobrepasarán pendientes superiores al 20% al trabajar en terrenos húmedos y del 30% en terrenos secos. La máquina debe ir dotada de cabina con pórtico de seguridad y el maquinista utilizará el cinturón de seguridad del vehículo.

Utilizar la excavadora adecuada al terreno en el que se trabaja. Utilizar oruga en terrenos blandos para materiales duros y trayectos cortos o mejor sin desplazamientos. Utilizar retroexcavadora sobre neumáticos en terrenos duros y abrasivos para materiales sueltos y trayectos largos y/o de continuo desplazamiento.

Es necesario hacer retroceder la máquina cuando la cuchara comience a excavar por debajo del chasis. Nunca se excavará por debajo de la máquina pues puede volcar en la excavación.

Se asegurará el conductor, antes de abandonar la máquina, de haber dejado el motor parado, quitar la llave de contacto, puesto el freno y haber dejado la cuchara reposando en el suelo; en el caso de tener que estacionar en pendiente, se asegurará colocando un tope bajo las ruedas en prevención.

No se cargará la pala con una carga para la cual no está diseñada. La máquina debe venir dotada de la información de las limitaciones de carga; y esta debe existir independientemente de los limitadores y ser conocida por el maquinista. Se revisará periódicamente el tensado y mantenimiento de las cadenas.

Si la cabina de la retroexcavadora no está insonorizada, será conveniente el uso de cascos auditivos de protección.

Si el material extraído con la máquina produjese mucho polvo se deberán mantener las ventanillas cerradas.

Al cargar el material en los camiones, la cuchara nunca debe pasar por encima de la cabina del camión.

En las operaciones de traslado de la máquina, se debe mantener el cazo a una altura de unos 40 a 50 cm. sobre el suelo, de modo que se pueda bajar rápidamente al suelo ante una emergencia, consiguiendo la paralización de la máquina.

8.2.3. PALA CARGADORA

La máquina debe ir dotada de cabina con pórtico de seguridad y el maquinista utilizará el cinturón de seguridad del vehículo.

Se asegurará el conductor antes de abandonar la máquina de haber dejado el motor parado, quitar la llave de contacto, puesto el freno y haber dejado la cuchara reposando en el suelo, en el caso de tener que estacionar en pendiente, se asegurará colocando un tope bajo las ruedas en prevención.

No se cargará la pala con una carga para la cual no está diseñada. La máquina debe venir dotada de la información de las limitaciones de carga; y esta debe existir independientemente de los limitadores y ser conocida por el maquinista.

Nunca se deberá transportar la carga con el cucharón totalmente alzado, cuanto más cerca del suelo se mantenga, mejor será su estabilidad.

Se mantendrán limpios los accesos de la máquina de grasas, polvo o combustible, para evitar caídas al subir o bajar de la misma.

Se revisará periódicamente el tensado y mantenimiento de las cadenas. En el caso de llevar neumáticos, al realizar la carga de presión de los mismos, el maquinista realizará dicha operación teniendo la precaución de colocarse protegido de la onda expansiva en caso de reventón del neumático, con la propia máquina o con otro medio auxiliar.

Si la cabina de la pala cargadora no está insonorizada, será conveniente el uso de cascos auditivos de protección.

Si el material extraído con la máquina produjese mucho polvo se deberán mantener las ventanillas cerradas.

Al cargar el material en los camiones, la cuchara nunca debe pasar por encima de la cabina del camión.

En la carga contra un frente de cantera se evitarán los taludes invertidos, saneándose con antelación si es preciso.

Examinar la superficie del terreno y la clase de suelo de la zona de trabajo, para determinar los lugares o puntos peligrosos así como los posibles obstáculos existentes, determinando el mejor método operativo.

En las operaciones de traslado de la máquina se debe mantener el cazo a una altura de unos 40 a 50 cm. sobre el suelo de modo que se pueda bajar rápidamente al suelo ante una emergencia, consiguiendo la paralización de la máquina.

Al formar los acopios de material se irán creando plataformas con una pendiente máxima del 30 % si sólo acceden a ellas las palas y del 20 % al tratarse de camiones, la anchura de la misma será de 4,5 m. mínimo.

8.2.4. CAMIÓN BASCULANTE Y DUMPER

Todos los conductores de camiones deberán ser poseedores del Permiso de Conducir. En el caso del dumper es aconsejable que así sea, e incluso obligatorio si se transita por vía urbana. Los vehículos subcontratados tendrán vigente la Póliza de Seguros con Responsabilidad Civil ilimitada, el Carnet de empresa y los Seguros Sociales cubiertos, antes de comenzar los trabajos en la obra.

Antes de poner el camión en marcha, el operador debe cerciorarse de que no existe nadie cerca, que pueda ser arrollado al iniciar la marcha. Es una buena costumbre hacer sonar el claxon antes de empezar a mover el camión. Es buena práctica circular con las luces encendidas.

Antes de arrancar el motor debe comprobar que todos los mandos están en su posición neutra, para evitar puestas en marcha intempestiva. Debe mirarse continuamente en la dirección de la marcha. Se prohíbe la marcha hacia atrás de los camiones con la caja levantada o durante la maniobra de descenso de la caja, tras el vertido del material, en especial, en presencia de tendidos eléctricos aéreos. Las maniobras de marcha atrás de los camiones para depositar el aglomerado en la extendedora se dirigirá mediante las indicaciones de un señalista.

Se prohíbe que los vehículos transporten personal fuera de la cabina de conducción y en número superior a los asientos existentes.

No se abandonará el camión sin antes haber parado el motor, quitado la llave de contacto, puesto el freno. Se colocará el seguro de bloqueo si lo tiene, en pendientes se colocará bajo las ruedas calzos o topes.

En el caso de realizar la carga de presión de las ruedas, esta se realizará teniendo la precaución de colocarse protegido de la onda expansiva en caso de reventón del neumático, con el propio vehículo o con otro medio auxiliar.

Se señalizará y establecerá un fuerte tope de fin de recorrido ante el borde de taludes o cortes en los que el camión o dúmper deba verter su carga, aparte de haber puesto el freno de mano.

Se prohíbe sobrepasar la carga máxima autorizada. Debiendo llevar un rótulo visible con indicaciones de carga máxima que puedan admitir. En el caso de los dúmpers, se prohíbe el colmo de las cargas que impida la correcta visión del conductor así como será obligatorio no exceder la velocidad de 20 km./h. tanto en el interior como en el exterior de la obra.

Todas las maniobras de los vehículos, serán guiadas por una persona, y su tránsito dentro de la zona de trabajo, se procurará que sea por sentidos constantes y previamente estudiados, impidiendo toda circulación junto a los bordes de la excavación. Si fuera necesario, se señalizarán los accesos y recorridos de los vehículos.

Es conveniente cuidar los caminos de circulación interna, cubriendo y compactando mediante escorias, zahorras, etc., todos los barrizales afectados por circulación interna de vehículos. Cuando en los tajos se produzcan polvaredas debidas a la circulación del os vehículos se regarán estos con la frecuencia necesaria.

Después del lavado del vehículo o de haber circulado por zonas con agua, conviene ensayar la frenada dos o tres veces.

En la puesta en marcha del dúmper, la manivela debe cogerse colocando el pulgar del mismo lado que los demás dedos.

Cuando el dúmper deba remontar pendientes bajo carga se efectuará siempre en marcha al frente, y los descensos en marcha de retroceso, en prevención de vuelcos. Al Circular cuesta abajo debe estar metida una marcha, nunca debe hacerse en punto muerto.

En el transporte de hormigón mediante el dúmper se debe tener cuidado con el posible fraguado, porque si ocurre, el vuelco al bascular es casi seguro.

Durante la carga en el dúmper el conductor debe permanecer fuera, a distancia prudencial.

No se procederá a reparaciones sobre el camión o el dúmper con el motor en marcha.

Examinar la superficie del terreno y la clase de suelo de la zona de trabajo, para determinar los lugares o puntos peligrosos así como los posibles obstáculos existentes.

8.2.5. CAMIÓN HORMIGONERA

No se deberá parar en curvas o zonas de poca visibilidad. En caso de ser imprescindible, se deberá señalizar previamente dicho estacionamiento, incluso se controlará el tráfico mediante señalistas.

Probar los frenos después de los lavados o de circular por zonas de agua.

No circular con la canaleta suelta, así como, después de su uso de deberá lavar la misma, para que durante la circulación no se produzca perdidas de material. Se deberá maniobrar lentamente mientras se descarga el hormigón en los tajos. No dar marcha atrás sin asegurarse de que el camino está libre.

Atender las indicaciones del encargado de tajo y grúa.

Cambiar los neumáticos cuando se encuentren en mal estado.

Se asegurará el conductor antes de abandonar el camión de haber dejado el motor parado, quitar la llave de contacto, puesto el freno, en el caso de tener que estacionar en pendiente, se asegurará colocando un tope bajo las ruedas en prevención.

El camión debe ir dotado de la información de las limitaciones de carga; y esta debe existir independientemente de los limitadores y ser conocido por el conductor.

Al realizar la carga de presión de los neumáticos, el conductor realizará dicha operación teniendo la precaución de colocarse protegido de la onda expansiva en caso de reventón del neumático, con la propia máquina o con otro medio auxiliar.

Previamente al inicio del vertido del hormigón del camión hormigonera, se instalarán fuertes topes antideslizantes en el lugar donde haya de quedar situado el camión. Si se circula por una obra en la que existan zanjas o terraplenes, no se hará a menos de dos metros de distancia de la cabeza del talud, tampoco se podrá estacionar para el vertido a menor distancia. Se prohíbe el cambio de posición del camión hormigonera al mismo tiempo que se vierte el hormigón. Esta maniobra deberá efectuarse, en su caso con la canaleta fija, para evitar movimientos incontrolados. Mientras se realiza el vertido se prestará atención al comportamiento de los taludes para detectar los riesgos de vuelco.

Los operarios no se situarán detrás de los camiones hormigoneras en maniobras de marcha atrás; estas maniobras siempre deberán ser dirigidas desde fuera del vehículo por uno de los trabajadores, Tampoco se situarán en el lugar de hormigonado hasta que el camión hormigonera no esté en posición de vertido.

8.2.6. GRÚA AUTOPROPULSADA

Antes de comenzar a trabajar deben hacerse todas las revisiones indicadas en las Normas de Mantenimiento, en donde también figuran las que hay que realizar periódicamente. Este mantenimiento periódico podrá ser demostrado documentalmente.

Los cables de izado y de sustentación serán de construcción y tamaño apropiados para las operaciones en que se hayan de emplear; en caso de sustitución por deterioro o rotura se hará mediante mano de obra especializada y siguiendo las instrucciones para el caso dadas por el fabricante.

Los ajustes de ojales y lazos para los ganchos, anillos y argollas estarán provistos de guardacabos metálicos resistentes.

Se llevará a cabo semanalmente una inspección del número de hilos rotos, desechándose aquellos cables que lo estén en más del 10% de los mismos. Así como se procederá al mantenimiento de los cables con la misma periodicidad: se limpiará el cable con cepillo metálico, para proceder al engrase mediante brocha o si fuera posible mediante baño. La grasa debe ser fluida, de elevada adherencia y exenta de productos ácidos.

Antes de comenzar el trabajo se debe reconocer la zona para observar posibles agujeros, baches, líneas eléctricas, debilidades en el terreno, etc. No se deberán hacer trabajos con vientos fuertes.

Se deberá trabajar obligatoriamente con los gatos de sustentación, para dotarle de la estabilidad adecuada, sobre una superficie compactada que no implique ovimientos indeseables.

Se vigilará constantemente las variaciones posibles por fallo del firme durante las operaciones y transporte de cargas suspendidas. No se abandonará la máquina sin antes haberla dejado en un lugar estable con la pluma recogida, el motor parado sin la llave de contacto y puesto el freno. No se abandonará jamás la máquina con carga suspendida, ni se ubicará en una rampa o pendiente.

Llevará un rótulo visible con indicaciones de carga máxima que puedan admitir y que por ningún concepto será sobrepasada.

Se procurará que las rampas de acceso a los tajos sean uniformes y que no superen la pendiente del 20%.

Al elevar la carga, se comprobará que está debidamente embragada y sujeta al gancho, se elevará lentamente, tensando los cables antes de empezar la elevación, cerciorándose que no hay peligro de vuelco, para ello se vigilará que la carga está totalmente libre y que no se sobrepasa el peso máximo que puede levantar la grúa y la capacidad portante del gancho.

El desplazamiento con carga es peligroso. La grúa no es una máquina de transporte, no debe nunca desplazarse con carga en la pluma, ya que es origen de vuelco y de graves accidentes.

8.2.7. COMPACTADOR

La máquina debe ir dotada de cabina con pórtico de seguridad y el maquinista utilizará el cinturón de seguridad del vehículo. Se asegurará el conductor antes de abandonar la máquina de haber dejado el motor parado, quitar la llave de contacto, puesto el freno, en el caso de tener que estacionar en pendiente, se asegurará colocando un tope bajo las ruedas en prevención.

Al realizar la carga de presión de los neumáticos, el maquinista realizará dicha operación teniendo la precaución de colocarse protegido de la onda expansiva en caso de reventón del neumático, con la propia máquina o con otro medio auxiliar.

Se debe mantener siempre buenas condiciones de visibilidad desde el puesto de mando. No se deberá trabajar en terrenos que superen una pendiente de un 15%, siempre que el fabricante, en función de las características de la máquina, no autorice mayor pendiente.

8.2.8. BULLDOZER

Antes de arrancar el motor debe comprobar que todos los mandos están en su posición neutra, para evitar puestas en marcha intempestivas.

Se utilizará el ríper adecuado al material a escarificar. Un ríper de 3 dientes es adecuado para material blando y poco estratificado. Para material duro o materiales estratificados se empleará el ríper de un diente. La dirección del ripado, deberá ser idéntica a la que presentan los estratos del material.

No se debe abusar del tilt de la hoja de bulldozer, ya que se disminuyen sus prestaciones y produce accidentes. Es preferible dar unas pasadas con el ríper, dejando una pequeña capa de material suelto y, a continuación, bulldozer lo escarificado. Este procedimiento aumenta la tracción, disminuye averías y evita riesgos.

Se atacará con el ríper bajo el ángulo adecuado, y se favorecerá la penetración aprovechando pequeñas pendientes. El exceso de pendiente (en ningún caso la pendiente lateral será superior al 50%), limitará está penetración, disminuyendo la producción y aumentando el riesgo. Deberá tenerse en cuenta que el bulldozer está diseñado para "empujar, y siempre que sea posible cuesta abajo. La velocidad optima de ripado es de 1,5 a 2,3 km./h. Si el bulldozer es capaz de sobrepasar esta velocidad, deberá ser equipado con un mayor número de dientes. Así mismo la distancia media del bulldozer deberá ser de 50 m., la óptima de 30 m. y en ningún caso se superarán los 100 m.

Antes de proceder al ripado deberá realizarse un sondeo del terreno para determinar si es precisa una prevoladura.

Se prohíbe que los vehículos transporten personal fuera de la cabina de conducción y en número superior a los asientos existentes. Se recomienda circular con las luces encendidas.

Las máquinas deben ir dotadas de cabina con pórtico de seguridad y el maquinista utilizará el cinturón de seguridad del vehículo.

Se asegurará el conductor antes de abandonar la máquina de haber dejado el motor parado, quitar la llave de contacto, puesto el freno y haber dejado la cuchara reposando en el suelo, en el caso de tener que estacionar en pendiente, se asegurará colocando un tope bajo las ruedas en prevención. Se revisará periódicamente el tensado y mantenimiento de las cadenas.

Si la cabina de la maquina no está insonorizada, será conveniente el uso de cascos auditivos de protección.

Si el material extraído con la máquina produjese mucho polvo se deberán mantener las ventanillas cerradas.

8.3. NORMAS PARA EL USO DE HERRAMIENTAS Y MEDIOS AUXILIARES

8.3.1. HERRAMIENTAS

Herramientas en general.

Deberá seleccionarse la herramienta adecuada a cada tipo de trabajo. Antes de ser utilizada, el operario se asegurará que esté en perfectas condiciones. Se observarán las instrucciones para el correcto uso de cada herramienta.

Deberán mantenerse en lugares seguros, lejos de donde puedan provocar o favorecer otro tipo de riesgos.

Al tratarse de un equipo de trabajo según se define en el R.D. 1215/97 del 18 de julio, modificado por el RD 2177/2004, de 12 de noviembre, por el que se establecen las disposiciones mínimas de seguridad y salud para la utilización por los trabajadores de los equipos de trabajo, deberá cumplir las disposiciones que le correspondan.

Martillo y maceta.

Se seleccionará su tipo y tamaño según el trabajo a realizar de acuerdo con el siguiente criterio:

- Martillo de bola en trabajos con metales.
- Martillo de peña, para trabajos de carpintería
- Martillo de uña, especial para arrancar clavos de la madera y para la ejecución de encofrados.
- Maceta, especialmente indicado en trabajos de albañilería

Antes de ser utilizado, deberá comprobarse que está en perfectas condiciones para su uso.

- La cabeza estará carente de rebabas.
- Cabeza y mango estarán sólidamente encajadas.
- El mango no estará roto ni astillado.
- El eje del mango y la cabeza serán sensiblemente perpendiculares.
- Tanto la cabeza como el mango estarán exentos de suciedad y grasas.

Se observarán las siguientes instrucciones para su correcto manejo:

- Para golpear se asirá fuertemente el mango, siempre por su extremo.

  En el momento del impacto, la superficie de la cabeza del martillo deberá ser paralela a la superficie del objeto golpeado.
- El operario se asegurará que no existen obstáculos en la trayectoria que describe el martillo, y estará equipado de guantes adecuados y gafas de protección, según los casos.

Para su transporte se utilizarán cajas y/o portaherramientas especiales. Nunca se dejarán en sitios de paso o en lugares elevados donde su caída pueda ocasionar accidentes.

Tijeras, alicates y tenazas.

Se seleccionará su tipo y tamaño según la naturaleza del trabajo a realizar, de acuerdo con las siguientes recomendaciones:

- Alicates universales, para cortar, doblar o sujetar.
- Alicates de puntas, para manipular piezas, cables y chapas finas.
- Alicates de corte, para efectuar cortes frontales, laterales o inclinados.
- Tenazas, para cortar o sujetar piezas.
- Tijeras, para cortar cables, cuerdas, alambres y chapas delgadas.

Antes de utilizarlos, deberá verificarse su perfecto estado de uso, comprobando que:

- Las mandíbulas están perfectamente enfrentadas, y carentes de melladuras y desgastes.
- Estén limpios de grasas, aceites y suciedad en general.

Para su correcto manejo no se utilizarán como llave para apretar o aflojar tuercas tomillos, ni tampoco para golpear o apalancar. No se martillearán los mangos para favorecer el corte.

No se utilizaran para cortar materiales más duros que el constitutivo de la propia herramienta. Si se utilizan para cortar cables o alambre sometidos a tensión mecánica, deberán sujetarse con firmeza los dos extremos equipados con mangos protegidos con material aislante.

Para su utilización en trabajos con riesgo eléctrico, deberán estar equipados con mangos protegidos con material aislante. Los operarios se protegerán durante el trabajo con guantes de caucho y gafas anti-impacto, si fuese necesario.

Para su transporte se utilizarán cajas y/o portaherramientas especiales, y nunca se dejarán en sitios de paso o lugares elevados, para evitar posibles accidentes.

Herramientas automáticas.

Normas y medidas preventivas:

- Se llevará a cabo al menos una vez al mes, una revisión minuciosa de todos los dispositivos de protección eléctrica, tales como fusibles, disyuntores, transformadores de seguridad.
- La máquina-herramienta debe llevar incorporado un interruptor de corte y se conectará a la red a través de una pareja de enchufe y clavija normalizados, de características acordes con la potencia nominal de la misma.
- Deberá disponerse de carcasas de protección en todos los elementos cortantes o punzantes, y se desconcertará la máquina cuando se proceda a cambiar el útil de trabajo.
- El operario encargado de su manejo deberá estar perfectamente instruido al respecto, y llevará puestos los elementos de protección personal exigidos por la naturaleza del trabajo que realice en cada caso.
- En recintos muy conductores, los motores deben ser alimentados con tensiones no superiores a 24 voltios.

Taladradora eléctrica:

- La toma de energía debe efectuarse a través de un enchufe normalizado y equipado con disyuntor diferencial. Asimismo la máquina debe disponer de doble aislamiento.
- Se deberá utilizar una broca adecuada al material que se quiere perforar:
- *Broca de Wydia, para fábricas de ladrillo y hormigones.*
- *Broca de acero rápido, para madera y metales.*
- Trabajar apoyado sobre una base estable.
- Antes de perforar, asegurarse de que no se afectarán cables eléctricos, conducciones de gas, agua, etc.
- Utilizar siempre guantes de caucho y gafas anti-impacto.

Rozadora-lijadora:

La toma de energía debe efectuarse a través de un enchufe normalizado y equipado con disyuntor diferencial. Asimismo la máquina debe disponer de doble aislamiento.

Se trabajará apoyándose en una superficie estable, sujetándose la máquina con firmeza. Las partes móviles y/o susceptibles de provocar proyecciones deben protegerse con carcasas adecuadas.

Debe utilizarse un disco-soporte apropiado en cada caso, y no se empleará para trabajar sobre materiales prohibidos. El operario encargado de su manejo deberá utilizar gafas o pantalla anti-impacto, mascarilla antipolvo y, en trabajos ininterrumpidos, protectores acústicos.

Herramientas impulsoras de clavos:

Confiar la utilización de la herramienta única y exclusivamente a personal cualificado instruido en su manejo. Utilizar protector y arandelas de freno adecuadas.

Comprobar previamente la naturaleza del material y su espesor. No disparar nunca sobre mármol, fundición, acero templado, etc.

Debe elegirse el cartucho y los clavos adecuados en cada caso. Nunca se debe fijar a menos de 10 cm. de bordes, o de una fijación fallida.

Trabajar en posición estable y no dirigir nunca la herramienta hacia personas u objetos susceptibles de provocar accidentes. No se debe utilizar las pistolas en recintos con vapores explosivos o inflamables.

El operario encargado de su manejo utilizará guantes de caucho y gafas anti-impactos. Para el transporte se debe utilizar un portaherramientas adecuado (de tipo bandolera), y se habilitarán cajas especiales cerradas con llave para guardar los cartuchos y los clavos.

Se llevará a cabo, al menos una vez cada dos semanas, una revisión general del estado de la máquina, y en caso de detectarse averías, se procederá inmediatamente a su reparación, confiando la realización de esta tarea a personal experto.

8.3.2. SIERRAS CIRCULARES

Estarán dotados de los siguientes elementos de protección:

- Carcasa de cubrición del disco.
- Cuchillo divisor del corte.
- Empujador de la pieza a cortar y guía.
- Carcasa de protección de las transmisiones por poleas.
- Interruptor estanco.
- Toma de tierra.

Las mesas de sierra se ubicarán en la obra en el lugar adecuado, es decir, que satisfaga las necesidades de producción sin que esto suponga un incremento de los riesgos por las interferencias de otros tajos de obra o la influencia de vehículos o maquinaria. Está prohibido el asentarlas en lugares encharcados para evitar el riesgo eléctrico, así como se mantendrá el espacio de alrededor en orden y limpieza para evitar caídas.

Será manejada por personal especializado y con instrucción sobre su uso, que poseerá autorización expresa del Jefe de obra para utilizar la máquina. El personal empleará pantallas o gafas para protegerse se las posibles proyecciones.

El disco será revisado periódicamente, sustituyendo toda hoja exageradamente recalentada o que presente grietas profundas, ya que podría producir un accidente.

El operario designado para utilizar la sierra tiene la obligación de mantener el disco de corte en perfecto estado de afilado, y cuidará de no cortar madera que lleve en su interior partes metálicas o materiales abrasivos; si debe realizar operaciones como las descritas procederá a extraer las partes metálicas o abrasivas que contenga el material a collar.

Los cortes de ladrillo o elementos prefabricados se realizarán mediante el disco más adecuado para el corte de material componente. Siempre que sean posible los cortes de material cerámico o de prefabricados se realizaran en vía húmeda, es decir bajo el chorro de agua que impida el origen del polvo.

En caso de corte de materiales como los descritos en el punto anterior pero en los que no es posible utilizar la "vía húmeda" se procederá como sigue:

- El operario se colocará para realizar el corte a sotavento, es decir, procurando que los vientos incidiendo sobre su espalda esparzan en dirección contraria el polvo proveniente del corte efectuado.
- El operario utilizará siempre una mascarilla de filtros mecánicos recambiables apropiada al material específico a cortar; y quedará obligado a su uso.
- El mantenimiento de estas máquinas será hecho por personal cualificado expresamente autorizado por la Jefatura de Obra.
- El transporte de este tipo de maquinarias en obra mediante las grúas se efectuara amarrándolas de forma equilibrada de cuatro puntos distintos.
- La mesa de sierra circular irá provista de una señal de 'Peligro" y otra de "Prohibido el uso a personal no autorizado".

Todas las máquinas se ajustarán a lo dispuesto en el R. D. 1495/1986, de 26 de mayo, por el que se aprueba el Reglamento de Seguridad de las Máquinas.

8.3.3. COMPACTADOR DE BANDEJA Y PISTÓN

La máquina deberá ser manejada única y exclusivamente por personal perfectamente instruido al respecto, prestando siempre la máxima atención y evitando posibles descuidos.

El operario deberá utilizar obligatoriamente botas de seguridad y guantes de cuero. Asimismo, se protegerá con cinturón antivibratorio siempre que permanezca al mando de la máquina durante toda la jornada de trabajo, o bien en intervalos ininterrumpidos de tiempo superiores a treinta minutos.

Al tratarse de un equipo de trabajo según se define en el R.D. 1215/97 del 18 de julio, modificado por el RD 2177/2004, de 12 de noviembre, por el que se establecen las disposiciones mínimas de seguridad y salud para la utilización por los trabajadores de los equipos de trabajo, deberá cumplir las disposiciones que le correspondan.

8.3.4. COMPRESOR

Será obligatorio el uso de auriculares en un radio de cuatro metros alrededor del compresor. Antes de su puesta en marcha se calzarán las ruedas del compresor, en evitación de desplazamientos indeseables. El arrastre y estacionamiento del compresor se realizará a una distancia superior a los 3 metros del borde de las zanjas, en evitación de vuelcos y por desplome de las cabezas de las mismas.

Se desecharán todas las mangueras que aparezcan desgastadas o agrietadas. El empalme de mangueras se efectuará por medio de racores.

El compresor se revisará periódicamente llevando a cabo las operaciones de mantenimiento y engrase estando fuera de funcionamiento.

Al tratarse de un equipo de trabajo según se define en el R.D. 1215/97 del 18 de julio, modificado por el RD 2177/2004, de 12 de noviembre, por el que se establecen las disposiciones mínimas de seguridad y salud para la utilización por los trabajadores de los equipos de trabajo, deberá cumplir las disposiciones que le correspondan.

8.3.5. ESCALERAS DE MANO

La longitud máxima será de 9 m. y la altura máxima a salvar de 7 m. Se colocarán con una relación de inclinación vertical/horizontal de 4/1 y sobrepasarán al menos 1 m. el piso superior. En su apoyo inferior tendrán zapatas, amarres o topes y en el superior algún tipo de anclaje. Las superficies de apoyo serán planas y horizontales y jamás se emplearán ladrillos o similares para niveladas.

Las escaleras preferentemente serán metálicas. Ofrecerán las necesarias garantías de solidez, estabilidad y seguridad y, en su caso de aislamiento o incombustión.

Las de madera tendrán los peldaños machihembrados, no clavados, y firmes. No se pintarán pero sí se podrán barnizar. Se evitará exponerlas a la intemperie. Cada 3 m, tendrá un refuerzo metálico de guía a guía. Las de tijera tendrán un cable o cadena para que no deslice y topes en el extremo de la articulación. Las de corredera deben tener un cruzamiento de sus tramos de al menos 1 m.

No utilizar una escalera para un fin distinto del suyo propio (o emplearla como pasarela, andamio, etc.)

No pretender alcanzar desde una escalera objetos alejados: si es necesario hay que moverla. Se empleará de uno en uno y siempre de cara a la escalera. Evitar subir y bajar acarreando cargas, como máximo de 25 kg. Estará prohibido subirse a los tres últimos peldaños.

8.3.6. MARTILLO ROMPEDOR

Las operaciones deberán ser desarrolladas por varias cuadrillas distintas, de tal forma que pueda evitarse la permanencia constante en el mismo y/u operaciones durante todas las horas de trabajo, para evitar lesiones en órganos internos.

Antes del comienzo de un trabajo se inspeccionará el terreno circundante, intentando detectar la posibilidad de desprendimientos de tierras y roca por las vibraciones que se transmiten al terreno. Se prohíbe realizar trabajos por debajo de la cota del tajo de martillos rompedores.

Se evitará apoyarse a horcajadas sobre la culata de apoyo, en evitación de recibir vibraciones perjudiciales.

Se prohíbe, abandonar los martillos rompedores conectados a la red de presión.

Se prohíbe abandonar el martillo con la barrena hincada.

8.3.7. HORMIGONERA ELÉCTRICA

Las hormigoneras se ubicarán en la obra en el lugar adecuado, es decir, que satisfaga las necesidades de producción sin que esto suponga un incremento de los riesgos por las interferencias de otros tajos de obra o la influencia de vehículos o maquinaria. Alrededor de la ubicación de la hormigonera se mantendrá el orden y limpieza en previsión de caídas al mismo nivel.

Las hormigoneras tendrán protegidos, mediante una carcasa metálica, los órganos de transmisión - correas, corona y engranajes -, para evitar los riesgos de atrapamiento. Las carcasas y demás partes metálicas de la hormigonera estarán conectadas a tierra.

Las operaciones de limpieza directa-manual se efectuarán previa desconexión de la red eléctrica, en previsión del riesgo eléctrico y de atrapamiento.

Se tiene la obligación de mantener las condiciones de seguridad que se exigen a la máquina, e impedir la utilización de la máquina cuando, directa o indirectamente se tenga

conocimiento de que no ofrece las debidas garantías de seguridad para las personas o los bienes.

Todas las máquinas se ajustarán a lo dispuesto en el R. D. 1495/1986, de 26 de mayo, por el que se aprueba el Reglamento de Seguridad de las Máquinas.

8.3.8. VIBRADORES

Se evitará vibrar directamente sobre las armaduras. El vibrado se efectuará desde tablones dispuestos sobre la capa de compresión de armaduras o sobre una base o plataforma de trabajo estable y segura, nunca sobre bovedillas o elementos poco resistentes.

Se vigilará que no sean anulados los elementos de protección contra el riesgo eléctrico. Nunca se deberá acceder a los órganos de origen eléctrico de alimentación con las manos mojadas o húmedas. Las conexiones eléctricas se efectuarán mediante conductores estancos de intemperie. Poseerán doble aislamiento eléctrico, y figurará en su placa de características el anagrama técnico correspondiente.

En los vibradores por combustibles líquidos, se tendrá en cuenta el riesgo que se deriva de la inflamabilidad del combustible.

El operario que maneja el vibrador hará uso de botas aislantes de goma, de caña alta y suelas antideslizantes.

8.3.9. UTILIZACIÓN DE LA INSTALACIÓN ELÉCTRICA PROVISIONAL DE OBRA

La instalación eléctrica de la obra deberá estar conforme al Reglamento Electrotécnico de Baja Tensión, de manera específica a las Instrucciones MIE-BT-027 y MIE-BT-028. Deberá ser realizada siempre por personal especializado y autorizado, al igual que las ampliaciones, las verificaciones, el mantenimiento y las reparaciones (en la instalación o en los equipos).

Los interruptores estarán protegidos en cajas del tipo blindado, con cortacircuitos fusibles y ajustándose a las normas establecidas en el Reglamento Electrotécnico de Baja Tensión. Se instalarán dentro de cajas normalizadas con puerta y cierre, con una señal de "Peligro Electricidad" sobre la puerta.

Se revisarán periódicamente el estado de mangueras, clavijas, puesta a tierra, tomos de corriente y cuadros eléctricos en general, reponiendo y sustituyendo lo que haga falta.

El calibre o sección del cableado será el especificado por el especialista, de acuerdo a la carga eléctrica que ha de soportar en función de la maquinaria e iluminación prevista.

La distribución desde el cuadro general de obra a los cuadros secundarios (o de planta), se efectuará mediante canalizaciones enterradas.

Se comprobará periódicamente el estado de los interruptores diferenciales accionando el botón de prueba de los mismos.

Si no existe conexión a la red eléctrica general y la energía se toma de la producida por un grupo electrógeno se realizará la revisión diaria y periódica del mismo.

Los cuadros eléctricos deberán ir dotados de enclavamiento de apertura, serán metálicos de tipo para la intemperie, con puerta y cerraja de seguridad y se protegerán con viseras eficaces como protección adicional, la carcasa del cuadro deberá estar puesta a tierra. Se colgarán pendientes de tableros de maderos recibidos a los paramentos verticales o bien a "pies derechos " firmes.

Las tomas de corriente irán provistas de interruptores de corte omnipolar que permita dejadas sin tensión cuando no hayan de ser utilizadas.

Los cuadros deben mantenerse limpios y sin ningún material o herramienta depositada en el interior. Así como los alrededores deben estar en perfectas condiciones de orden y limpieza. El piso libre de agua, grasa y objetos que pueden ocasionar tropezones o resbalamientos.

Los grupos, cuadros, tomas eléctricas, tendrán puertas o tapas que permanecerán cerradas para evitar el acceso fortuito a los mismos, con la señalización oportuna de riesgo eléctrico.

No tocar nunca con las manos un conductor caído en el suelo, después de accidentes o averías hasta no desconectar la corriente.

La desconexión de prolongadores debe hacerse siempre sin tensión y no debe tirarse del cable para desconectar una clavija, tampoco deben usarse nunca enchufes con cuerpos externos rotos, ni conectar cables sin clavijas.

8.3.10. SOLDADURA ELÉCTRICA

No es peligroso trabajar con un equipo de soldadura si se cumplen determinadas normas de seguridad específicas para este tipo de trabajo, en lo que se refiere a:

- La correcta conexión del equipo de soldar.
- La verificación y conservación de los cables conductores.
- El manejo y cuidado del equipo.
- La realización correcta de las operaciones de soldadura.

Soldar con seguridad:

Para evitar electrocuciones hay que evitar que la tensión en vacío descargue a través del cuerpo humano. Por lo tanto es preciso:

- Llevar puestos los guantes protectores cuando se está soldando.
- Cambiar inmediatamente los guantes que se estropeen.
- Dejar siempre el portaelectrodo encima de objetos aislantes, o colgado de una horquilla aislada.

Una protección eficaz sería: traje de trabajo cerrado hasta arriba, delantal de cuero, polainas, guantes y pantalla de soldador.

8.4. NORMAS PARA EL PERSONAL

8.4.1. MANDOS Y ENCARGADOS

- Cumplir las normas de seguridad establecidas para cada trabajo y hacer cumplir dichas normas al personal bajo su autoridad.
- Hacer que el personal a sus órdenes utilice los medios de protección que tienen asignados.
- No permitir el incumplimiento de las Normas de Seguridad establecidas para cada trabajo.
- No permitir que el personal a sus órdenes se someta a riesgos innecesarios por exceso de confianza, negligencia o ignorancia.
- Velar por el mantenimiento de las condiciones de seguridad idóneas para cada trabajo.
- Analizar, y llevar a la práctica si procede, toda sugerencia que en materia de Seguridad e Salud en el Trabajo formule el personal bajo su mando.
- Elegir a las personas más adecuadas para cada tipo de trabajo.
- Informar al personal sobre los riesgos e instruirles en los métodos de trabajo más adecuados para cada tipo de actividad.
- Supervisar la correcta aplicación de los sistemas de seguridad, no permitiendo antes, el inicio del trabajo.
- La obligación de aumentar el nivel de seguridad es de TODOS, sobre quien tiene personal bajo su autoridad, esta obligación se convierte en RESPONSABILIDAD.

8.4.2. PERSONAL DE OBRA

- Respete las normas de seguridad de que se le hace entrega en los que concierne a la realización de su trabajo.
- Tenga en cuenta las instrucciones dadas por los responsables de la obra.
- Absténgase de cualquier acción, de cualquier gesto que pueda exponerlo o exponer a sus compañeros al peligro.
- Si es posible, aleje inmediatamente todas las condiciones peligrosas o señálelas a su jefe directo.
- Procure mantener el espacio de trabajo lo más ordenado y limpio posible, manteniendo en todo momento los pasillos y diferentes lugares de paso libres de estorbos.
- Utilice las herramientas y los aparatos únicamente para el uso al que están destinados. Se debe solicitar la sustitución inmediata de toda herramienta en mal estado.
- No degrade, no quite ni neutralice, los dispositivos de protección.
- Si por necesidades de trabajo hay que retirar momentáneamente alguna protección colectiva, debe reponerse antes de ausentarse.
- Hacer el levantamiento de cargas a mano, flexionando las piernas, sin doblar la columna vertebral.
- Para transportar pesos a mano, es siempre preferible ir equilibrado llevando dos.
- No se deben hacer giros bruscos de cintura cuando se está cargando.
- Al utilizar carretillas de mano para el transporte de materiales:
- No tirar de la carretilla dando la espalda al camino.
- Antes de bascular la carretilla al borde de una zanja o solar, colocar un tope.
- Observe las prohibiciones de fumar
- Respete las señales de seguridad.
- No consuma bebidas alcohólicas en la obra o taller.
- Utilice la prenda de seguridad necesaria que se ajuste a los riesgos derivados de la labor que realice y durante el tiempo que le lleve su realización.
- Ante cualquier accidente, avisará inmediatamente a cualquiera de sus mandos.
- No hará un trabajo sin saber cómo se hace. Preguntará antes.
- Se pondrá en conocimiento del superior cualquier antecedente de vértigo o miedo a las alturas.
- Es obligatorio utilizar cinturón de seguridad cuando se trabaja en altura y no exista protección colectiva eficaz.
- Antes de comenzar un trabajo en altura, se comprobará que no hay nadie trabajando ni por encima ni por debajo en la misma vertical.
- Está prohibido arrojar materiales o herramientas desde altura.
- Cuando se trabaja en altura, las herramientas deben llevarse en bolsas o cajas adecuadas que impidan su caída fortuita y poder utilizar las dos manos en los desplazamientos.

8.4.3. MANEJO DE CARGAS

El empresario deberá a adoptar las medidas necesarias para evitar en lo posible la manipulación manual de cargas, sirviéndose de equipos auxiliares para el manejo mecánico de las mismas. Cuando no pueda evitarse la necesidad de manipulación manual de cargas, el empresario deberá tomar las medidas de organización adecuadas y proporcionar a los trabajadores los medios para reducir el riesgo.

Es obligación del empresario informar y formar sobre los riesgos derivados de la manipulación manual de cargas y sobre las medidas de prevención y protección. Así como, consultar acerca de ello a los trabajadores.

Los trabajadores por tanto, tienen el deber y el derecho de presentar propuestas que afecten a la seguridad en la manipulación manual de cargas. Los trabajadores tendrán derecho a la vigilancia de los posibles efectos de la manipulación manual de cargas en su salud con una periodicidad mínima anual.

El peso máximo que se recomienda no sobrepasar es de 25 kg. en condiciones ideales de manipulación. Se entiende como condiciones ideales de manipulación manual a las que incluyen una postura ideal para el manejo (carga cerca del cuerpo, espalda derecha, sin giros ni inclinaciones), una sujeción firme del objeto con una posición neutral de la muñeca, levantamientos suaves y espaciados y condiciones ambientales favorables.

En circunstancias especiales, trabajadores sanos y entrenados físicamente podrían manipular cargas de hasta 40 kg., siempre que la tarea se realice de forma esporádica y en condiciones seguras. Dichas circunstancias especiales serían aquellas en que habiéndose realizado todos los esfuerzos posibles para evitar la manipulación manual de cargas, o para reducir los riesgos a los niveles más bajos posibles, existe la necesidad de manipular cargas que podrían exceder de 25kg.. En estos casos, se debe poner especial atención en la formación y en el entrenamiento en técnicas de manipulación de cargas, adecuadas a la situación concreta.

El peso teórico recomendado que se podría manejar en función de la posición de la carga con respecto al cuerpo se indica a continuación, teniendo en cuenta que cuando se manipulan cargas en más de una de las zonas, el límite será el de la más desfavorable:

Distancia al cuerpo	Pegado	Longitud brazo
Altura de la cabeza	13 kg	7 m
Altura del hombro	19 kg	11 m
Altura del codo	25 kg	13 m
Altura de los nudillos	20 kg	12 m

Si la manipulación de cargas se hace sentado, no se debería pasar de 5 g. de peso, siempre que sea en una zona próxima al tronco, evitando manipular cargas a nivel del suelo o por encima del nivel de los hombros y giros e inclinaciones del tronco.

Cuando la manipulación de cargas se realiza en equipo se tendrá en cuenta que la capacidad de levantamiento es dos tercios de la suma de las capacidades individuales. Cuando el equipo es de tres personas, la capacidad de levantamiento se reduce a la mitad de la suma de las capacidades individuales teóricas.

El recorrido de la carga desde que se inicia el levantamiento hasta que finaliza la manipulación, o desplazamiento vertical de la carga, tiene como valor ideal 25 cm.; siendo aceptables los desplazamientos comprendidos entre la "altura de los hombros y la altura de media pierna". Procurando evitar los desplazamientos que se realicen fuera de estos rangos. No deberían manejarse cargas por encima de 175 cm. que es el límite de alcance para muchas personal. Los límites establecidos se multiplicaran por los siguientes factores en función del desplazamiento vertical:

Desplazamiento vertical	Factor de corrección
Hasta 25 cm	1
Hasta 50 cm	0.91
Hasta 100 cm	0.87
Hasta 175 cm	0.84
Más de 175 cm	0

Es preferible que las cargas tengan asas o ranuras en las que se pueda introducir la mano fácilmente, de modo que permitan un agarre correcto, en función del tipo de agarre que presente la carga deberán aplicarse los siguientes factores a los límites de carga:

Tipo de agarre	Factor de corrección
Agarre bueno	1
Agarre regular	0.95
Agarre malo	0.9

Factor de corrección a aplicar al límite de cargas en función de la frecuencia de la manipulación:

	Duración de la manipulación		
Frecuencia de manipulación	< 1h/dia	entre 1 y 2 h	> 2h/dia
	Factor de corrección		
1 vez cada 5 minutos	1	0.95	0.85
1 vez/minuto	0.94	0.88	0.75
4 veces/minuto	0.84	0.72	0.45
9 veces/minuto	0.52	0.3	0
12 veces/minuto	0.37	0	0
> 15 veces/minuto	0	0	0

La postura correcta al manejar una carga es con la espalda derecha. Es conveniente que la anchura de la carga no supere la anchura de los hombros, la profundidad no debería superar los 35 cm. La superficie de la carga no debe tener elementos peligrosos que generen riesgos de lesiones. En caso contrario, se aconseja la utilización de guantes.

Las cargas deberán tener el centro de gravedad fijo y centrado geométricamente. Si no fuera así se deberá advertir con una etiqueta, debiéndose manipular con el centro de gravedad lo más cerca posible del cuerpo.

Los equipos de protección individual no deberán interferir en la capacidad de realizar movimientos, no impedirán la visión ni disminuirán la destreza manual. Se evitarán los bolsillos, cinturones, u otros elementos fáciles de enganchar. La vestimenta deberá ser cómoda y no ajustada. El calzado constituirá un soporte adecuado para los pies, será estable, con la suela no deslizante, y proporcionará una protección adecuada del pie contra la caída de objetos.

METODO PARA LEVANTAR LA CARGA:

1. Planificar el levantamiento

Siempre que sea posible se deberán utilizar ayudas mecánicas.

- Seguir las indicaciones que aparezcan en el embalaje.
- Observar la carga, forma y tamaño, posible peso, zonas de agarre, posibles puntos peligrosos.... Probar a alzar primero un lado, ya que no siempre el tamaño de la carga ofrece una idea exacta de su peso real.
- Solicitar ayuda de otras personas en caso necesario.
- Tener prevista la ruta de transporte y punto de destino final del levantamiento, retirando los materiales que entorpezcan el paso.
- Usar la vestimenta el calzado y los equipos adecuados.

2. Colocar los pies

Separar los pies para proporcionar una postura estable y equilibrada para el levantamiento, colocando un pie más adelantado que el otro en la dirección del movimiento.

3. Adoptar la postura de levantamiento

- Doblar las piernas manteniendo en todo momento la espalda recta No flexionar demasiado las rodillas.
- No girar el tronco ni adoptar posturas forzadas.

4. Agarre firme

Sujetar firmemente la carga empleando ambas manos y pegaría al cuerpo. Cuando sea necesario cambiar el agarre, hacerlo suavemente o apoyando la carga.

5. Levantamiento suave

Levantarse suavemente, por extensión de las piernas, manteniendo la espalda derecha. No dar tirones a la carga ni moverla de forma rápida o brusca.

6. Evitar giros

Procurar no efectuar nunca giros, es preferible mover los pies para colocarse en la posición adecuada.

7. Carga pegada al cuerpo

Mantener la carga pegada al cuerpo durante todo el levantamiento

8. Depositarla carga

Si el levantamiento es desde el suelo hasta una altura importante, por ejemplo la altura de los hombros o más, apoyar la carga a medio camino para poder cambiar el agarre.

9. MEDICINA PREVENTIVA Y PRIMEROS AUXILIOS

9.1. BOTIQUINES

En la obra existirá un lugar dedicado a la asistencia sanitaria con los medios para efectuar acciones de urgencia en caso de accidentes, este lugar contará con un botiquín de primeros auxilios que contará con todo lo necesario, que se revisará y completará periódicamente.

En cada vehículo de obra existirá un botiquín para efectuar acciones de urgencia en caso de accidentes, que contará con todo lo necesario, que se revisará y completará periódicamente, y de cuya existencia tendrá conocimiento todo el personal de la obra. El botiquín deberá contar de lo siguiente:

- Alcohol de 96 grados.
- Agua oxigenada.
- Solución desinfectante.
- Antiinflamatorio.
- Analgésico.
- Colirio.
- Algodón hidrófilo.
- Vendas.
- Gasas estériles.
- Esparadrapo.
- Tiritas.
- Guantes esterilizados.
- Tijeras.

9.2. ASISTENCIA A ACCIDENTADOS

La dirección de obra del contratista adjudicatario deberá informarse sobre el emplazamiento de los diferentes Centros Médicos (Servicios propios, Mutuas Patronales, Mutualidades Laborales, Ambulatorios, etc.), donde debe trasladarse a los accidentados para su más rápido y efectivo tratamiento.

Se dispondrá en la obra, y en sitio bien visible, de una lista con los teléfonos de urgencias, ambulancias, taxis, etc, para garantizar un rápido traslado de los posibles accidentados a los Centros de asistencia.

A uno de los trabajadores de la obra, concretamente al capataz de la misma se le dará un resumen de instrucciones para caso de accidente, siendo él preferiblemente el encargado de atender al posible accidentado y de su traslado.

9.3. RECONOCIMIENTOS MÉDICOS

La empresa pondrá al alcance de los trabajadores que se incorporen a la obra la posibilidad de someterse a un reconocimiento médico anual, esta vigilancia de la salud solo se podrá llevar a cabo cuando el trabajador preste su consentimiento o sea obligatorio por ocupar un puesto de riesgo de características especiales (Art. 22 de la Ley de Prevención de Riesgos Laborales 31/1.995, de 8 de noviembre).

10. INSTALACIONES PROVISIONALES DE HIGIENE Y BIENESTAR

Se hace obligatoria la instalación de unas determinadas instalaciones provisionales de obra como son: vestuarios, aseos, duchas y comedor.

Se habilitará dichas casetas para los trabajadores a pie de obra equipadas con todo lo que exige la legislación vigente de Seguridad y Salud en el Trabajo.

11. PREVENCIÓN Y PROTECCIÓN DE INCENDIOS

Para la prevención y protección de incendios dentro del recinto de las instalaciones, se instalarán en lugares estratégicos, como pueden ser aquellos cercanos a instalaciones eléctricas, acopios de materiales inflamables o equipos fijos de trabajo, el número suficiente y clase adecuada de extintores. Tanto los vehículos de transporte de personal como cada una de las maquinas de obra llevarán un extintor portátil.

12. LIBRO DE INCIDENCIAS

En cumplimiento del R.D. 1627/97 sobre disposiciones mínimas de seguridad y salud en las obras de construcción, existirá en obra un Libro de Incidencias debidamente cumplimentado con la finalidad de controlar y hacer un seguimiento del plan de seguridad y salud.

Burgos, Febrero de 2.012

AUTORES DEL PROYECTO

D. Sergio Agustín Ratón Alomar

Dña. Miriam Sacristán Terradillos

Dña. Raquel Estrada Merino

D. Alfonso Cid González

PLIEGO DE PRESCRIPCIONES TÉCNICAS PARTICULARES

ÍNDICE

Página

1. OBJETO DEL PLIEGO 41

2. DISPOSICIONES LEGALES DE APLICACIÓN 41

3. CONDICIONES DE LOS MEDIOS DE PROTECCIÓN 41

3.1. CONDICIONES GENERALES 41
3.2. CONDICIONES DE LOS EQUIPOS DE PROTECCIÓN PERSONAL 41
3.2.1. PROTECCIONES DE LA CABEZA 42
3.2.2. PROTECCIONES DE LOS OÍDOS 42
3.2.3. PROTECCIONES DE LOS OJOS 42
3.2.4. PROTECCIONES DE LAS VÍAS RESPIRATORIAS 43
3.2.5. PROTECCIÓN DEL CUERPO 44
3.2.6. PROTECCIÓN DE LAS MANOS 44
3.2.7. PROTECCIONES DE LOS PIES 45
3.2.8. PROTECCIÓN CONTRA VIBRACIONES MECÁNICAS 46
3.3. CONDICIONES DE LOS EQUIPOS DE PROTECCIÓN COLECTIVA 46
3.3.1. SEÑALIZACIÓN 46
3.3.2. INSTALACIÓN ELÉCTRICA PROVISIONAL 46
3.3.3. VALLAS AUTÓNOMAS DE LIMITACIÓN Y PROTECCIÓN 49
3.3.4. TOPES DE DESPLAZAMIENTO 49
3.3.5. PROTECCIONES ANTIINCENDIOS 49
3.3.6. MEDIOS AUXILIARES PARA TRABAJOS TOPOGRÁFICOS 49
3.3.7. PASILLOS DE SEGURIDAD 49
3.3.8. ESCALERAS 49

4. ORDENACIÓN DE LA ACCIÓN PREVENTIVA 50

4.1. ORGANIGRAMA FUNCIONAL 51
4.1.1. SERVICIOS DE PREVENCIÓN 51
4.1.2. LOS REPRESENTANTES DE LOS TRABAJADORES. DELEGADOS DE PREVENCIÓN 51
4.1.3. VIGILANTE Y COMITÉ DE SEGURIDAD Y SALUD 52
4.1.4. COORDINADOR DE SEGURIDAD Y SALUD, TÉCNICOS Y MANDOS INTERMEDIOS 52
4.1.5. COORDINACIÓN DE LOS DISTINTOS ÓRGANOS ESPECIALIZADOS 52
4.2. NORMAS GENERALES DE SEGUIMIENTO Y CONTROL 53
4.2.1. TOMA DE DECISIONES 53
4.2.2. EVALUACIÓN CONTINUA DE LOS RIESGOS 53
4.2.3. CONTROLES PERIÓDICOS 53
4.2.4. ADECUACIÓN DE LAS MEDIDAS PREVENTIVAS Y ADOPCIÓN DE MEDIDAS CORRECTORAS 53
4.2.5. PARALIZACIÓN DE LOS TRABAJOS 54
4.2.6. REGISTRO Y COMUNICACIÓN DE DATOS E INCIDENCIAS 54
4.2.7. REUNIONES DE SEGUIMIENTO Y CONTROL INTERNO 55
4.3. FORMACIÓN E INFORMACIÓN 55
4.3.1. ACCIONES FORMATIVAS 55
4.3.2. INSTRUCCIONES GENERALES Y ESPECIFICAS 56
4.3.3. INFORMACIÓN Y DIVULGACIÓN 57

5. ASISTENCIA MÉDICO SANITARIA 58

5.1. SERVICIOS ASISTENCIALES 58
5.2. MEDICINA PREVENTIVA 58
5.3. BOTIQUÍN DE OBRA 59
5.4. NORMAS SOBRE PRIMEROS AUXILIOS Y SOCORRISMO 59

6. PREVENCIÓN Y EXTINCIÓN DE INCENDIOS 60

7. PROTECCIÓN FRENTE A CONTAMINANTES FÍSICO-QUÍMICOS 61

7.1. EL POLVO 61
7.2. RUIDOS 61
7.3. VIBRACIONES 62
7.4. RADIACIONES 62
7.5. RIESGO ELÉCTRICO 62

8. LOCALES Y SERVICIOS DE HIGIENE Y BIENESTAR 63

1. OBJETO DEL PLIEGO

El presente Pliego de Prescripciones Técnicas Particulares tiene por objeto describir y regular la ejecución de las tareas de prevención de riesgos profesionales individuales y colectivos y la dotación de medios de protección y señalización adecuada para conseguir un óptimo nivel de bienestar y seguridad para las personas directa o indirectamente afectadas por la ejecución de las obras definidas en este Proyecto.

También se definen las características y especificaciones a las que deben ajustarse los equipos y materiales empleados en las diversas tareas relacionadas con los objetivos anteriormente citados.

2. DISPOSICIONES LEGALES DE APLICACIÓN

El presente Estudio de Seguridad y Salud, no vulnera o incumple con lo legislado que le sea de aplicación. Por ello se omite hacer mención expresa de una extensa lista de legislación aplicable, la cual está en continuo cambio y/o desarrollo reglamentario por parte del legislador. Únicamente haremos mención expresa del cumplimiento del mismo con las directrices y especificaciones del R.D. 1627/1.997, por el que se establecen disposiciones mínimas de seguridad y salud en las obras de construcción; así como, la Ley 31/1995 de Prevención de Riesgos Laborales y R. D. 39/97 sobre el Reglamento de los Servicios de Prevención, como pilar fundamental para desarrollar la política a seguir en materia de prevención de riesgos laborales.

3. CONDICIONES DE LOS MEDIOS DE PROTECCIÓN

3.1. CONDICIONES GENERALES

Todos los elementos de protección, tanto individuales como colectivos, tendrán fijado un período de vida útil, desechándose a su término.

Cuando, por las circunstancias especiales de trabajo, se produzca un deterioro más rápido de una prenda o equipo, se repondrá ésta al momento, independientemente de cuál sea su duración prevista o la fecha de la próxima entrega.

Todo medio o equipo de protección que haya sufrido u trato límite, es decir, al máximo para el que fue concebido (por ejemplo, como consecuencia de un accidente) será desechado y repuesto inmediatamente. De igual forma se procederá cuando, debido a su utilización, hayan adquirido holguras o tolerancias de las admitidas por el fabricante.

En ningún caso el uso de prenda o equipo de protección representará un riesgo en sí mismo.

3.2. CONDICIONES DE LOS EQUIPOS DE PROTECCIÓN PERSONAL

Todos los elementos de protección personal se ajustarán a las Normas de Homologación del Ministerio de Trabajo (O.M. del 17-5-74). (B.O.E. del 29/5/74); siempre que exista en el mercado.

En los casos en que no exista Norma de Homologación oficial deberán ser, a juicio del Director de la obra, de calidad adecuada a sus respectivas prestaciones.

Se procurará que, en todo momento, los trabajadores o las terceras personas dispongan de un equipo de protección idónea, para lo cual:

- Deberá estar adaptado a la naturaleza del riesgo para el que ha sido concebido, es decir, deberá ser eficaz.
- Deberá causar la menor molestia, es decir, estorbará lo menos posible y, por lo tanto, será fácilmente aceptado por el trabajador.
- Deberá sentar bien por su concepción estética.

En cualquier caso, se tendrá siempre presente que la función de los equipos de protección individual consiste en aminorar las consecuencias de un accidente, y no en eliminar o reducir el riesgo de que éste se produzca, por lo que nunca deberán ser substitutivos, sino complementarios, de los equipos de protección colectiva y de las medidas de prevención general.

Se exceptuarán de lo dispuesto en el párrafo anterior los casos en que el empleo de protecciones colectivas entrañe mayor riesgo que el del propio trabajo en sí, lo que ocurrirá, eventualmente, en casos excepcionales y de corta duración.

3.2.1. PROTECCIONES DE LA CABEZA

Será obligatorio el empleo de casco protector en todo lugar de la zona de obras donde exista riesgo de que hombres y objetos puedan caer desde un nivel a otro.

El casco protector se compondrá de:

- Casco propiamente dicho.
- Barboquejo y/o atalaje.
- Accesorios varios.

3.2.2. PROTECCIONES DE LOS OÍDOS

Será obligatorio el empleo de cascos antiruido, en todo lugar de la zona de obras donde trabajadores y/o terceras personas estén sometidas a la acción de fuentes de emisión ruidosa durante periodos de tiempo y a niveles superiores a los permitidos en el R.D. 1.316/1.989 sobre medidas de protección a los trabajadores para los riesgos derivados de su exposición al ruido.

Se admitirá el empleo de tapones protectores en las mismas circunstancias, y siempre y cuando el nivel de protección aportado no sea inferior al exigido por las citadas recomendaciones.

Los cascos antiruido estarán formados por dos orejeras rígidas unidas entre sí por una lámina o unas varillas de acero que permitan la sustentación del conjunto por detrás de la cabeza. Las orejeras estarán provistas, del lado del pabellón auditivo, de una pieza elástica que sirva de junta de estanqueidad y que haga más confortables.

Los tapones protectores estarán constituidos por dos tapones auriculares que se adapten a la actividad del oído externo y protejan el sistema auditivo de los efectos de los niveles sonoros extremos.

3.2.3. PROTECCIONES DE LOS OJOS

Será obligatorio la utilización de gafas protectoras en todo lugar de la zona de obras en la que trabajadores y/o terceras personas estén expuestos a cualquier de los siguientes riesgos:

- Penetración o impacto de partículas sólidas en el ojo.
- Existencia de polvo, más o menos fino, en el aire.
- Contacto con líquidos o vapores corrosivos.
- Exposiciones a radiaciones visibles demasiado intensas.
- Exposiciones a radiaciones invisibles (infrarrojo y ultravioleta).

Protección frente al polvo e impactos.

Se utilizarán gafas de cazoleta con protecciones laterales, cuyos cristales sean ópticamente neutros y perfectamente transparentes. Si existiese riesgo de impacto con partículas gruesas, o suficientemente intenso como para producir la rotura de los cristales se emplearán gafas especiales de seguridad con rejilla metálica protectora.

Protecciones frente a líquidos y/o vapores corrosivos

Se utilizarán gafas estancas con protección perimetral completa, dotadas de sistemas de aireación adecuados y pantallas ejecutadas con un material plástico antiempañable.

Protecciones frente a radiaciones electromagnéticas

Se utilizarán gafas especiales equipadas con cristales fabricados con materiales capaces de eliminar en su totalidad las radiaciones peligrosas. El mecanismo de actuación podrá ser el de absorción o el de reflexión, o bien una combinación de ambos procedimientos.

Deberá disponerse de gafas con una gama completa de cristales de diferente opacidad que sean capaces de eliminar una determinada banda del espectro.

No se admitirá el empleo de gafas con cristales simplemente teñidos, sin características selectivas que permitan eliminar las radiaciones nocivas de la zona ultravioleta y las infrarrojas de pequeña longitud de onda. Los operarios que efectúen trabajos de soldadura deberán protegerse con pantallas faciales de seguridad materializadas en plástico, y dotadas de cristales filtrantes que eliminen por completo las bandas de radiaciones nocivas definidas en el párrafo anterior y aminoren el efecto de las radiaciones visibles demasiado intensas.

3.2.4. PROTECCIONES DE LAS VÍAS RESPIRATORIAS

Será obligatoria la utilización de equipos de protección personal de las vías respiratorias en toda la zona de obras en la que trabajadores y/o terceras personas estén expuestos al riesgo de inhalación de polvo o vapores y/o gases irritantes o tóxicos, y siempre y cuando sea imposible o desaconsejable la implantación de sistemas de protección colectiva.

Los dispositivos de protección de las vías respiratorias estarán diseñados específicamente para resguardar el sistema respiratorio del individuo de los efectos del polvo, humos, vapores y gases tóxicos o nocivos, etc., y podrán utilizar alguno de los dos procedimientos siguientes:

- Filtración físico-química del aire inhalado.
- Aislamiento de las vías respiratorias respecto del aire ambiente.

Protección frente al polvo.

Se emplearán mascarillas antipolvo en las zonas de trabajo donde la atmósfera esté cargada de polvo. Constarán de una mascarilla propiamente dicha, ya sea completa o buconasal, equipada con un dispositivo filtrante de tipo mecánico que retenga las partículas agresivas.

Se tendrá presente que su vida útil estará limitada por la propia duración del filtro, cuyos poros se colmatarán después de un período de utilización más o menos largo. El usuario se dará cuenta de ello por un aumento de la dificultad en la respiración. Al ser este fenómeno progresivo, se repondrá la mascarilla cuando el grado de colmatación del filtro sea tal que haga imposible mantener el ritmo normal de respiración.

Protección frente a humos, vapores y gases.

Se emplearán mascarillas antigás en las zonas de trabajo donde la atmósfera esté contaminada por humos, vapores y/o gases irritantes o tóxicos. Constarán de una mascarilla

completa, equipada con un dispositivo filtrante de carácter químico que retenga o neutralice las sustancias nocivas presentes en el aire ambiente.

Se observarán, con toda exactitud, las instrucciones dadas por el fabricante en lo que se refiera al empleo, mantenimiento y vida útil de la mascarilla.

Elección del equipo adecuado.

La elección de un equipo de protección personal del sistema respiratorio deberá hacerse en base a las dos premisas siguientes

- Diseñar una protección separada para cada riesgo, y no reunir en un mismo dispositivo elementos de protección contra varios riesgos diferentes, salvo que esos riesgos se presentan simultáneamente en la misma zona de trabajo.
- A igualdad de eficacia, dar a los aparatos más sencillos y más fáciles de conservar y mantener.

3.2.5. PROTECCIÓN DEL CUERPO

Ropa de trabajo.

Todos los trabajadores deberán estar equipados con ropas adecuadas que aseguren una protección eficaz contra las agresiones exteriores (intemperie, radiaciones, agentes parásitos, productos químicos, etc.).

El mono o buzo de trabajo deberá ser amplio y podrá ajustarse a la cintura mediante un cinturón de hebilla o de anillas. Asimismo, deberá estar dotado de aberturas de aireación y de puños ajustables.

Protecciones frente a polvo y gases.

Los trabajadores que realicen su labor en una atmósfera cargada de polvo, o en presencia de contaminantes físico-químicos que produzcan efectos nocivos en la piel, deberán ser equipados con ropa especial estanca y/o ropas con aire a presión.

Protección frente a efectos térmicos y radiaciones.

Los operarios que efectúen trabajos de soldadura estarán equipados con mandiles, manoplas y polainas especiales para protegerse de los efectos nocivos derivados de los procesos de soldadura.

3.2.6. PROTECCIÓN DE LAS MANOS

Será obligatoria la utilización de protecciones personales para las manos en todo lugar de la zona de obras en el que los trabajadores y/o terceras personas estén expuestos al riesgo de accidentes mecánico y/o contacto manual con agentes agresivos de naturaleza físico-química.

Protecciones individuales contra las agresiones lentas (dermatosis).

Se emplearán cremas barreras o películas siliconadas y/o guantes adecuados para combatir las dermatosis profesionales. Estos últimos constituyen el medio más eficaz de protección, utilizándose aquellas solamente en los casos en que, excepcionalmente, fuera imposible o desaconsejable el empleo de guantes.

Protección individual contra agresiones rápidas.

Para proteger las manos frente agresiones rápidas (golpes, cortes, arañazos, pinchazos, quemaduras, descargas eléctricas, etc.) se emplearán, según los casos, diferentes prendas, tales como guantes, manoplas, mandiles, etc. Su diseño deberá ser adecuado a la naturaleza de cada trabajo a realizar, por lo que deben ser confortables (tanto el material como la forma) y eficaces.

Las manoplas se utilizarán y exclusivamente para el manejo de grandes piezas. Cuando sea necesaria una buena aprehensión de las piezas, será indispensable que la goma del guante permita la oposición del dedo pulgar.

La naturaleza material de estas prendas de protección deberá ser adecuada a los riesgos inherentes a cada tipo de trabajo. En función de esto, se procurará utilizar los siguientes tipos de guantes y manoplas:

- De caucho, especialmente indicados en trabajos que conlleven riesgo eléctrico.
- De neopreno, resistentes a la abrasión y a los agentes químicos de carácter agresivo.
- De algodón o punto, en trabajos ligeros y/o que exijan manipular chapas delgadas.
- De cuero, para trabajos de manipulación en general.
- De material plástico, para protegerse de agentes químicos nocivos y/o procesos abrasivos.
- De amianto, especialmente indicados en trabajos que conlleven riesgos de sufrir quemaduras.
- De metálica, para trabajos de manipulación de piezas cortantes.
- De lona, especialmente indicados en trabajos de manipulación de objetos sin grandes asperezas, pero que puedan producir arañazos como es el caso de maderas fácilmente astillables.

3.2.7. PROTECCIONES DE LOS PIES

Elementos integrantes del calzado de seguridad.

El calzado de seguridad llevará incorporados, obligatoriamente, los siguientes elementos:

- Una suela especial que posea propiedades antideslizantes
- Una puntera reforzada que proteja los dedos del pie.

Además de esto, y en función del riesgo específico inherente a cada tipo de trabajo estarán dotados, eventualmente, de alguno o algunos de los siguientes elementos:

- Una plantilla imperforable.
- Un elemento de protección especial para los tobillos.

Protección frente al riesgo de aplastamiento.

Se realizará integrando en el calzado una puntera de acero que pueda absorber el choque de un objeto sin deformarse y, por lo tanto, sin poner en peligro la integridad física de los dedos de los pies.

Las punteras de seguridad deberán ser capaces de soportar una carga estática del orden de dos (2) toneladas y no se deformarán mucho bajo el efecto del choque de un objeto de veinte (20) Kg. de peso, dejando caer desde una altura de un (1) metro.

Asimismo, deberán tener una protección horizontal redondeada en evitación de que los dedos puedan resultar seccionados. El espacio libre en el interior de la puntera no será inferior a 15 mm en el momento del choque, ni a 20 mm después de producirse el choque.

Protección contra el riesgo de perforaciones.

Se realizará incorporando al calzado un plantilla protectora ligera y por lo tanto delgada de acero inoxidable.

Su resistencia deberá ser tal que un objeto de ciento veinte (120) Kg. De peso, animado de una velocidad de setenta y cinco (75) mm. por minuto, no producirá la perforación de la plantilla al incidir sobre la misma.

Características del calzado de seguridad.

El calzado de seguridad deberá reunir las siguientes características:

- Solidez, o lo que es lo mismo, resistencia adecuada a las condiciones particulares de cada uso.
- Flexibilidad.
- Ligereza.
- Confort.
- Diseño estético.

3.2.8. PROTECCIÓN CONTRA VIBRACIONES MECÁNICAS

Será obligatoria la utilización de cinturones antivibratorios por parte de los operarios sometidos a los efectos de movimientos vibratorios de frecuencia inferior a los 100 Hz..

En cualquier caso, deberán utilizar siempre cinturones antivibratorios los conductores de maquinaria y los operarios que trabajen con martillos neumáticos.

3.3. CONDICIONES DE LOS EQUIPOS DE PROTECCIÓN COLECTIVA

3.3.1. SEÑALIZACIÓN

Tiene una utilización general en toda la obra. Se utilizaran las señales desarrolladas por el Real Decreto 485/1997 sobre disposiciones mínimas en materia de señalización de seguridad y salud en el trabajo. Así pues, se emplearán cuatro tipos de señales:

- Señales de prohibición.
- Señales de obligación.
- Señales de advertencia.
- Señales de información.

Las señales de prohibición y obligación tendrán forma de círculo y sus fondos rojos y azules, respectivamente. Para los carteles de advertencia la forma establecida es la forma triangular con el fondo amarillo. La forma rectangular es la reservada para la señalización de información con fondos azules o verdes. La correcta utilización de estas señales y el cumplimiento de sus indicaciones evitarán situaciones peligrosas y numerosos accidentes.

3.3.2. INSTALACIÓN ELÉCTRICA PROVISIONAL

Personal instalador.

El montaje de la instalación deberá efectuado, necesariamente, por personal especializado. Hasta 50 Kw podrá dirigirlo un instalador autorizado sin título facultativo. A partir de esa potencia la dirección de la instalación corresponderá a un técnico titulado.

Ubicación distribución de los cuadros eléctricos.

Se colocarán en lugares sobre los que no exista riesgo de caída de materiales u objetos procedentes de trabajos realizados a niveles superiores, salvo que se utilice una protección específica que evite los riesgos de tal contingencia. Esta protección será extensible tanto al lugar en que se ubique cada cuadro cuanto a la zona de acceso de las personas que deban acercarse al mismo.

Todos los cuadros de la instalación eléctrica provisional estarán debidamente separados de los lugares de paso de máquinas y vehículos y siempre dentro del recinto de la obra.

El acceso al lugar en que se ubique cada uno de los cuadros estará libre de objetos y materiales que entorpezcan el paso, tales como escombros, áreas de acopio de materiales, etc.

Existirá un cuadro general del que se tomarán las derivaciones para otros auxiliares, facilitando así la conexión de máquinas y equipos portátiles y evitando tendidos eléctricos largos. Dentro de lo posible, el cuadro general se colocará en lugar próximo a las oficinas de obra o en el que estén las personas encargadas del mantenimiento de la instalación.

Condiciones de seguridad de los cuadros eléctricos.

Los distintos elementos de todos los cuadros, principal y secundarios o auxiliares, se colocarán sobre una placa de montaje de material aislante.

Todas las partes activas de la instalación estarán aisladas para evitar contactos peligrosos.

En el cuadro principal o de origen de la instalación se dispondrán dos interruptores diferenciales: uno para alumbrado y otro para fuerza. La sensibilidad de los mismos será de 300 mA.

El sistema de protección, en origen, se complementará mediante interruptores magnetotérmicos, para evitar los riesgos derivados de las posibles sobrecargas de líneas. Se colocará un magnetotérmico por cada circuito que se disponga.

Los cuadros dispondrán de las correspondientes bases de enchufe para la toma de corriente y conexión de los equipos y máquinas que lo requieran. Estas tomas de corriente se colocarán en los laterales de los armados, para facilitar que puedan permanecer cerrados. Las bases permitirán la conexión de equipos y máquinas con la instalación de puesta a tierra.

Podrá excluirse el ubicar las bases de enchufe en armados cuando se trate de un cuadro auxiliar y se sitúe en zonas en las que no existan los riesgos que requieran los antes citados grados de protección.

Las tomas de corriente irán provistas de un interruptor de corte omnipolar que permita dejadas sin tensión cuando no hayan de ser utilizadas.

En el caso de máquinas de elevación y transporte, la instalación, en su conjunto, se podrá poner fuera de servicio mediante un interruptor de corte omnipolar general, accionado a mano y colocado en el circuito principal. Este interruptor deberá estar situado en lugar fácilmente accesible desde el suelo, en el mismo punto en que se sitúe el equipo eléctrico de accionamiento, y será fácilmente identificable mediante rótulo indeleble.

Instalación de puesta a tierra.

Las estructuras de máquinas, equipos y las cubiertas de sus motores cuando trabajen a más de 24 voltios y no posean doble aislamiento, así como las cubiertas metálicas de todos los dispositivos eléctricos en el interior de cajas o sobre ellas, deberán estar conectadas a la instalación de puesta a tierra.

La resistencia a tierra estará en función de la sensibilidad del interruptor diferencial del origen de la instalación. La relación será, en obras o emplazamientos húmedos: 1. Diferencial de 300 Ma. Rt < 80 ohm.

Los circuitos de puesta a tierra formarán una línea eléctricamente continua en la que no podrán incluirse en serie sus masas para elementos metálicos, cualesquiera que sean éstos.

Se prohíbe intercalar en circuitos de tierra seccionadores, fusibles o interruptores. Las condiciones mínimas de los elementos constitutivos de la instalación deberán ajustarse a las prescripciones del Reglamento Electrotécnico para Baja Tensión, en su Instrucción 039. Los electrodos podrán ser de cobre o de hierro galvanizado y usarse en forma de pica o placas.

En el caso de picas:

- El diámetro mínimo de las de cobre será de 14 mm.
- El diámetro exterior mínimo de las de hierro galvanizado será de 25 mm.
- La longitud mínima, en ambos casos, será de 2 m.

El uso de otros materiales deberá estar ajustado a las exigencias del antes citado

Reglamento y ser objeto de cálculo adecuado, realizado por técnico especialista. Aquellos electrodos que no cumplan estos requisitos mínimos serán rechazados. El terreno deberá estar tan húmedo como sea posible.

Conductores eléctricos.

Las líneas aéreas con conductores desnudos destinados a la alimentación de la instalación temporal de obras sólo serán permitidas cuando su trazado no transcurra por encima de los locales o emplazamientos temporales que, además, sean inaccesibles a las

personas, y la traza sobre el suelo del conductor más próximo a cualquiera de éstos se encuentre separada de los mismos 1 m. como mínimo.

En caso de conductores aislados no se colocarán por el suelo, en zonas de paso de personas o de vehículos, ni en áreas de acopio de materiales. Para evitarlo, en tales lugares se colocarán elevados y fuera del alcance de personas y vehículos o enterrados y protegidos por una protección resistente. Esta preocupación se hará extensiva a las zonas encharcadas o con riesgo de que se encharquen.

Los extremos de los conductores estarán dotados de sus correspondientes clavijas de conexión. Se prohibirá que se conecten directamente los hilos desnudos en las bases de enchufe.

Caso de que se tengan que realizar empalmes, la operación la efectuará personal especializado y las condiciones de estanqueidad serán como mínimo las propias del conductor.

Los conductores aislados, utilizados tanto para acometidas como para las instalaciones interiores, serán de 1.000 voltios de tensión nominal como mínimo, y los utilizados en instalaciones interiores serán de tipo flexible, aislados con elastómeros o plásticos de 440 voltios, como mínimo, de tensión nominal.

Equipos herramientas de accionamiento eléctrico.

Todos los equipos y herramientas de accionamiento eléctrico que se utilicen en obra tendrán su placa de características técnicas en buen estado, de modo que sus sistemas de protección puedan ser claramente conocidos.

Todas las máquinas de accionamiento eléctrico se desconectarán tras finalizar su uso, aunque la paralización sea por corto espacio de tiempo, si quedan fuera de la vigilancia del operado que la utiliza.

Cada operario deberá estar advertido de los riesgos que conlleva cada máquina. En ningún caso se permitirá su uso por personal inexperto.

Cuando se empleen máquinas en lugares muy conductores, la tensión de alimentación no será superior a 24 voltios, si no son alimentados por un transformador de separación de circuitos.

Conservación y mantenimiento.

Diariamente se efectuará una revisión general de la instalación, comprobándose:

- Funcionamiento de interruptores diferenciales y magnetotérmicos.
- Conexión de cada cuadro y máquina con la red de tierra.
- Asimismo, se verificará la continuidad de los conductores a tierra.
- El grado de humedad de la tierra en que se encuentran enterrados los electrodos de puesta a tierra.
- Que los cuadros eléctricos permanecen con la cerradura en correcto estado de uso.
- Que no existen partes en tensión al descubierto en los cuadros generales, en los auxiliares y en los de las distintas máquinas.

Cada vez que entre en la obra una máquina de accionamiento eléctrico deberá ser realizada respecto a sus condiciones de seguridad.

Todos los trabajos de conservación y mantenimiento así como las revisiones periódicas, los efectuará un instalador autorizado, que extenderá el correspondiente parte en el que se

reflejará el trabajo realizado. Una de las copias se entregará al responsable del seguimiento del Plan de Seguridad.

Antes de iniciar los trabajos de reparación de cualquier elemento de la instalación, se comprobará que no existe tensión, mediante aparatos destinados a tal efecto. Al desconectar la instalación para efectuar tales operaciones, se adoptarán medidas excepcionales para evitar que alguien, de manera accidental, pueda conectarla nuevamente. Para ello se dispondrá de señales claras y se conservará la llave del cuadro o se colocará junto a él una persona que vigile ante cualquier contingencia. El operario que efectúe tales operaciones usará de manera complementada equipos de protección individual y herramientas aislantes homologadas, de acuerdo con las características de la instalación.

3.3.3. VALLAS AUTÓNOMAS DE LIMITACIÓN Y PROTECCIÓN

Será obligatoria su instalación en todo lugar de la zona de obras en el que existan obstáculos o discontinuidades importantes a nivel del suelo, tales como escaleras, zanjas, pozos, vaciados, acopios de material, etc. También se instalarán cuando sea necesario limitar físicamente un determinado espacio afectado por riesgos derivados de la proximidad de determinados contaminantes, máquinas, o instalaciones de obra.

Tendrán como mínimo noventa (90) centímetros de altura, y estarán materializadas a base de entramados de tubos metálicos o de madera. Asimismo, dispondrán de patas regulables que aseguren, en todo momento, su perfecto equilibrio vertical.

3.3.4. TOPES DE DESPLAZAMIENTO

Se instalarán en todo lugar de la zona de obras en el que exista riesgo de que vehículos y maquinaria en general puedan volcar o precipitarse a causa de un acercamiento excesivo al borde de coronación en terraplenes, vertederos o incluso en zonas en las que el terreno natural presente cambios bruscos de pendiente.

Se podrán materializar con un par de tablones embridados, que se fijarán sólidamente al terreno por medio de redondos de acero hincados, o bien, con cualquier otro sistema eficaz, y se ajustarán sensiblemente a las forma y dimensiones establecidas en los planos.

3.3.5. PROTECCIONES ANTIINCENDIOS

Las condiciones de este medio de protección colectiva se reflejan en el apartado de MEDIDAS DE EMERGENCIA del presente Estudio.

3.3.6. MEDIOS AUXILIARES PARA TRABAJOS TOPOGRÁFICOS

Estos medios, tales como cinta, jalones, mira, etc., deberán estar constituidos por material dieléctrico, en evitación de riesgos de electrocución por contacto con líneas eléctricas aéreas o subterráneos.

3.3.7. PASILLOS DE SEGURIDAD

Podrán realizarse a base de pórticos con pies derechos y dintel a base de tablones embridados, firmemente sujetos al terreno y cubierta cuajada de tablones. Estos elementos también podrán ser metálicos (los pórticos a base de tubo o perfiles y la cubierta de chapa).

Serán capaces de soportar el impacto de los objetos que se prevea caer, pudiendo colocar elementos amortiguadores sobre la cubierta (sacos terrenos, capa de arena, etc.).

3.3.8. ESCALERAS

La longitud máxima será de 9 m. y la altura máxima a salvar de 7 m. Se colocarán con una relación de inclinación vertical/horizontal de 4/1 y sobrepasarán al menos 1 m. el piso superior. En su apoyo inferior tendrán zapatas, amarres o topes y en el superior algún tipo de anclaje. Las superficies de apoyo serán planas y horizontales y jamás se emplearán ladrillos o similares para nivelarlas.

Las escaleras preferentemente serán metálicas. Ofrecerán las necesarias garantías de solidez, estabilidad y seguridad y, en su caso de aislamiento o incombustión. Las de madera tendrán los peldaños machihembrados, no clavados, y firmes. No se pintarán pero sí se podrán barnizar. Se evitará exponerlas a la intemperie. Cada 3 m, tendrán un refuerzo metálico de guía a guía.

Las de tijera tendrán un cable o cadena para que no deslice y topes en el extremo de la articulación. Se utilizarán siempre como tales escaleras de tijera abriendo ambos largueros y nunca se utilizarán a modo de borriquetas. Se sustituirán por otro tipo de escaleras si fuese necesario hacer uso de los 3 últimos peldaños.

Las de corredera deben tener un cruzamiento de sus tramos de al menos 1 m. Cuando una escalera presente algún tipo de defecto debe ser reparada o desechada inmediatamente. No se utilizará una escalera para un fin distinto del suyo propio (o emplearla como pasarela, andamio, etc.)

4. ORDENACIÓN DE LA ACCIÓN PREVENTIVA

Principios generales de prevención y de seguridad aplicables durante la ejecución de la obra

Las acciones preventivas que se llevarán a cabo en la obra, por el empresario, estarán constituidas por el conjunto coordinado de medidas, cuya selección deberá dirigirse a:

- Evitar los riesgos.
- Evaluar los riesgos que no se pueden evitar, adoptando las medidas pertinentes
- Combatir los riesgos en su origen.
- Adaptar el trabajo a la persona, en particular en lo que respecta a la concepción de los puestos de trabajo, así como a la selección de los métodos de trabajo y de producción, con miras, en especial a atenuar el trabajo monótono y repetitivo y a reducir los efectos del mismo en la salud.
- Tener en cuenta la evolución de la técnica.
- Sustituir lo peligroso por lo que entraña poco o ningún peligro.
- Planificar la prevención buscando un conjunto coherente que integre en la misma la técnica, la organización del trabajo, las condiciones de trabajo, las relaciones sociales y la influencia de los factores ambientales en el trabajo.
- Adoptar medidas que antepongan la protección colectiva a la individual.
- Dar las debidas instrucciones a los trabajadores.

En la selección de las medidas preventivas se tendrán en cuenta los riesgos adicionales que las mismas pudieran implicar, debiendo adoptarse, solamente, cuando la magnitud de dichos riesgos sea substancialmente inferior a la de los que se pretende controlar y no existen alternativas razonables más seguras.

Planificación y Organización.

La planificación y organización de la acción preventiva deberá formar parte de la organización del trabajo, siendo, por tanto, responsabilidad del empresario, quien deberá orientar esta actuación a la mejora de las condiciones de trabajo y disponer de los medios oportunos para llevar a cabo la propia acción preventiva.

La acción preventiva deberá integrarse en el conjunto de actividades que conllevan la planificación, organización y ejecución de la obra y en todos los niveles jerárquicos del personal adscrito a la obra, a la empresa constructora principal y a las subcontratas.

El empresario deberá reflejar documentalmente la planificación y organización de la acción preventiva, dando conocimiento y traslado de dicha documentación, entre otros, al responsable del seguimiento y control del Plan de Seguridad y Salud, con carácter previo al inicio de las obras, para su aprobación.

El empresario, en base a la evaluación inicial de las condiciones de trabajo y a las previsiones establecidas en el Estudio de Seguridad y Salud, planificará la acción preventiva.

El empresario deberá tomar en consideración las capacidades profesionales, en materia de seguridad y Salud, de los trabajadores en el momento de encomendarles tareas que impliquen riesgos graves.

Coordinación de actividades empresariales.

El empresario principal adoptará las medidas necesarias para que los trabajadores de las demás empresas subcontratadas reciban la información adecuada sobre los riesgos existentes en la obra y las correspondientes medidas de prevención. Cuando en la obra desarrollen simultáneamente actividades dos o más empresas, vinculadas o no entre sí contractualmente, tendrán el deber de colaborar en la aplicación de las prescripciones y criterios contenidos en este Pliego, conjunta y separadamente.

El empresario deberá comprobar que los subcontratistas o empresas con las que ellos contraten determinados trabajos reúnen las características y condiciones que les permitan dar cumplimiento a las prescripciones establecidas en este Pliego. La empresa principal deberá vigilar que los contratistas, subcontratistas y trabajadores autónomos cumplan con las obligaciones que desarrollan el art. 11 y 12 del R.D. 1627/1997 así como se cumpla la Ley 32/2006, de 18 de octubre, reguladora de la subcontratación en el Sector de la Construcción.

4.1. ORGANIGRAMA FUNCIONAL

4.1.1. SERVICIOS DE PREVENCIÓN

El empresario, en los términos y con las modalidades previstas en las disposiciones vigentes, deberá disponer de los servicios encargados de la asistencia técnica preventiva, en cuya actividad participarán los trabajadores conforme a los procedimientos establecidos.

El conjunto de medios humanos y materiales constitutivos de dicho servicio será organizado por el empresario directamente o mediante concierto.

Los servicios de prevención deberán estar en condiciones de proporcionar a la empresa el asesoramiento y apoyo que precise en función de los tipos de riesgo en ella existentes y en lo referente a:

- Diseñar y aplicar los planes y programas de actuación preventiva.
- Evaluar los factores de riesgo que puedan afectar a la salud e integridad física de los trabajadores.
- Definir las prioridades en la adopción de las medidas preventivas adecuadas y la importancia de su eficacia.
- La vigilancia para la correcta información y formación de los trabajadores.
- Asegurar la prestación de los primeros auxilios y planes de emergencia.
- Vigilar la salud de los trabajadores respecto de los riesgos derivados del trabajo.

El servicio de prevención tendrá carácter interdisciplinar, debiendo sus medios ser apropiados para cumplir sus funciones. Para ello, el personal de estos servicios, en cuanto a su formación, especialidad, capacitación, dedicación y número, así como los medios técnicos, deberán ser suficientes y adecuados a las actividades preventivas a desarrollar en función del tamaño de la empresa, tipos de riesgo a los que puedan enfrentarse los trabajadores y distribución de riesgos en la obra.

4.1.2. LOS REPRESENTANTES DE LOS TRABAJADORES. DELEGADOS DE PREVENCIÓN

Los representantes del personal que en materia de prevención de riesgos hayan de constituirse según las disposiciones vigentes, contarán con una especial formación y conocimiento sobre Seguridad y Salud Laboral.

Ello deberá proporcionar a los representantes de los trabajadores la formación complementada, en materia preventiva, que sea necesaria para el ejercicio de sus funciones, por sus propios medios o por entidades especializadas en la materia. Dicha formación se reiterará con la periodicidad necesaria.

4.1.3. VIGILANTE Y COMITÉ DE SEGURIDAD Y SALUD

Se constituirá obligatoriamente un Comité de Seguridad y Salud cuando la obra cuente con 30 ó más trabajadores. Estará compuesto por los representantes de los trabajadores y por el empresario o sus representantes, en igual número. Su organización, funciones, competencias y facultades serán las determinadas legalmente. En las empresas no obligadas a constituir Comités de Seguridad y Salud y que ocupen a 5 o más trabajadores, el empresario designará un vigilante de Seguridad, cuyo nombramiento deberá recaer en la persona más cualificada en materia de Seguridad y Salud Laboral.

4.1.4. COORDINADOR DE SEGURIDAD Y SALUD, TÉCNICOS Y MANDOS INTERMEDIOS

Cuando en la ejecución de la obra intervenga más de una empresa, o una empresa y trabajadores autónomos o diversos trabajadores autónomos, el promotor, antes del inicio de los trabajos o tan pronto como se constate dicha circunstancia, designará un coordinador en materia de seguridad y salud durante la ejecución de la obra, pudiendo ser designado como tal la misma persona que actúa como coordinador en la fase de proyecto.

El coordinador en materia de seguridad y salud durante la ejecución de la obra deberá desarrollar las siguientes funciones:

- Coordinar la aplicación de los principios generales de prevención y de seguridad:
- Al tomar las decisiones técnicas y de organización con el fin de planificar los distintos trabajos o fases de trabajo que vayan a desarrollarse simultánea o sucesivamente.
- Al estimar la duración requerida para la ejecución de estos distintos trabajos o fases de trabajo.
- Coordinar las actividades de la obra para garantizar que los contratistas y, en su caso, los subcontratistas y los trabajadores autónomos apliquen de manera coherente y responsable los principios de la acción preventiva que se recogen en el artículo 15 de la Ley de Prevención de Riesgos Laborales durante la ejecución de la obra y, en particular, en las tareas o actividades a las que se refiere el artículo 10 de este Real Decreto.
- Aprobar el plan de seguridad y salud elaborado por el contratista y, en su caso, las modificaciones introducidas en el mismo. Conforme a lo dispuesto en el último párrafo del apartado 2 del artículo 7, la dirección facultativa asumirá esta función cuando no fuera necesaria la designación de Coordinador.
- Organizar la coordinación de actividades empresariales.
- Coordinar las acciones y funciones de control de la aplicación correcta de los métodos de trabajo.
- Adoptar las medidas necesarias para que sólo las personas autorizadas puedan acceder a la obra.

El resto de los técnicos, mandos intermedios, encargados y capataces adscritos a la obra, tanto de la empresa principal como de las subcontratadas, con funciones de control, organización y ejecución de la obra, deberán estar dotados de la formación suficiente en materia de prevención de riesgos y salud laboral, de acuerdo con los cometidos a desempeñar.

En cualquier caso, la empresa adjudicataria deberá determinar, antes del inicio de la obra, los niveles jerárquicos del personal técnico y mandos intermedios adscritos a la misma, dando conocimiento, por escrito, de ello al responsable del seguimiento del Plan de Seguridad y Salud.

4.1.5. COORDINACIÓN DE LOS DISTINTOS ÓRGANOS ESPECIALIZADOS

Los distintos órganos especializados que coincidan en la obra, deberán coordinar entre sí sus actuaciones en materia preventiva estableciéndose por parte del contratista la programación de las diversas acciones, de modo que se consiga una actuación coordinada de los intervinientes en el proceso y se posibilite el desarrollo de sus funciones y competencias en la seguridad y salud del conjunto de la obra.

El empresario de la obra o su representante en materia de prevención de riesgos deberán poner en conocimiento del responsable del seguimiento y control del Plan de Seguridad y Salud cuantas acciones preventivas hayan de tomarse durante el curso de la obra por los distintos órganos especializados.

El Coordinador de seguridad y salud organizará la coordinación y cooperación en materia de seguridad y salud que propicien actuaciones conjuntas sin interferencias, mediante un intercambio constante de información sobre las acciones previstas o en ejecución y cuantas reuniones sean necesarias para contraste de pronunciamientos y puesta en común de las actuaciones a emprender.

4.2. NORMAS GENERALES DE SEGUIMIENTO Y CONTROL

4.2.1. TOMA DE DECISIONES

Con independencia de que por parte del empresario, su representante, los representantes legales de los trabajadores o Inspección de Trabajo se pueda llevar a cabo la vigilancia y control de la aplicación correcta y adecuada de las medidas preventivas recogidas en el Plan de Seguridad y Salud, la toma de decisiones en relación con el mismo corresponderá únicamente al Ingeniero responsable de su seguimiento, salvo que se trate de casos en que hayan de adaptarse medidas urgentes sobre la marcha que, en cualquier caso, podrán ser modificadas con posterioridad si el referido técnico no las estima adecuadas.

En aquellos otros supuestos de riesgos graves e inminentes para la salud de los trabajadores que hagan necesaria la paralización de los trabajos, la decisión deberá tomarse por quien detecte la anomalía referida y esté facultado para ello sin necesidad de contar con la aprobación previa del responsable del seguimiento y control del Plan de Seguridad y Salud, aun cuando haya de darse conocimiento inmediato al mismo, a fin de determinar las acciones posteriores.

4.2.2. EVALUACIÓN CONTINUA DE LOS RIESGOS

Por parte del empresario principal se llevará a cabo durante el curso de la obra una evaluación continuada de los riesgos, debiéndose actualizar las previsiones iniciales, reflejadas en el Plan de Seguridad y Salud, cuando cambien las condiciones de trabajo o con ocasión de los daños para la salud que se detecten, proponiendo en consecuencia, si procede, la revisión del Plan aprobado al responsable de su seguimiento y control antes de reiniciar los trabajos afectados.

Asimismo, cuando se planteen modificaciones de la obra proyectada inicialmente, cambios de los sistemas constructivos, métodos de trabajo o proceso de ejecución previstos, o variaciones de los equipos de trabajo, el empresario deberá efectuar una nueva evaluación de riesgos previsibles y, en base a aquella, proponer, en su caso, las medidas preventivas a modificar, en los trabajos reseñados anteriormente.

4.2.3. CONTROLES PERIÓDICOS

- La empresa deberá llevar a cabo controles periódicos de las condiciones de trabajo, y examinar la actividad de los trabajadores en la prestación de sus servicios para detectar situaciones potencialmente peligrosas.
- Cuando se produzca un daño para la salud de los trabajadores o, si con ocasión de la vigilancia del estado de salud de éstos respecto de riesgos específicos, se apreciasen indicios de que las medidas de prevención adoptadas resultan insuficientes, el empresario deberá llevar a cabo una investigación al respecto, a fin de detectar las causas de dichos hechos. Sin perjuicio de que haya de notificarse a la autoridad laboral cuando proceda por caso de accidente.
- Asimismo, el empresario deberá llevar el control y seguimiento continuo de la siniestralidad que pueda producirse en la obra, mediante estudios en los que se reflejen: tipo de control, número de accidentes, tipología, gravedad y duración de la incapacidad (en su caso) y relaciones de partes de accidentes cursados y deficiencias. Todos estos datos estarán a disposición del responsable del seguimiento y control del Plan de Seguridad y Salud, con independencia de otros agentes intervinientes que vengan exigidos por las normas en vigor.
- La empresa principal deberá vigilar que los subcontratistas cumplen la normativa de protección de la salud de los trabajadores y las previsiones establecidas en el Plan de Seguridad y Salud, en la ejecución de los trabajos que desarrollen en la obra.
- El personal directivo de la empresa principal delegado o representante M contratista, técnicos y mandos intermedios adscritos a la obra deben cumplir personalmente y hacer cumplir al personal a sus órdenes lo establecido en el Plan de Seguridad y Salud y las normas o disposiciones vigentes sobre la materia.

4.2.4. ADECUACIÓN DE LAS MEDIDAS PREVENTIVAS Y ADOPCIÓN DE MEDIDAS CORRECTORAS

Cuando, como consecuencia de los controles e investigaciones anteriormente reseñadas, se apreciase por el empresario la inadecuación de las medidas y acciones

preventivas utilizadas, se procederá a la modificación inmediata de las mismas en el caso de ser necesario, proponiendo al responsable del seguimiento y control del Plan de Seguridad y Salud su modificación en el supuesto de que afecten a trabajos que aún no se hayan iniciado. En cualquier caso, hasta tanto no puedan materializarse las medidas preventivas provisionales que puedan evitar o disminuir el riesgo, se interrumpirán, si fuere preciso, los trabajos afectados.

Cuando la dirección facultativa de la obra, contratistas, subcontratistas y trabajadores autónomos, las personas u órganos con responsabilidades en materia de prevención en las empresas intervinientes en la obra, los representantes de los trabajadores y técnicos de los órganos especializados en materia de seguridad y salud en el trabajo de las Administraciones públicas competentes, observasen una infracción a la normativa sobre prevención de riesgos laborales o la inadecuación a las previsiones reflejadas en el Plan de Seguridad y Salud y reclamasen al empresario para la adopción de las medidas correctoras que procedan mediante la correspondiente anotación en el libro de incidencias, el empresario vendrá obligado a su ejecución en el plazo que se fije para ello.

4.2.5. PARALIZACIÓN DE LOS TRABAJOS

Cuando el Coordinador de seguridad y salud o la dirección facultativa, en su caso, observase la existencia de riesgo de especial gravedad o de urgencia, podrá disponer la paralización de los tajos afectados o de la totalidad de la obra, en su caso, debiendo la empresa principal asegurar el conocimiento de dicha medida a los trabajadores afectados.

Si con posterioridad a la decisión de paralización se comprobase que han desaparecido las causas que provocaron el riesgo motivador de tal decisión o se han dispuesto las medidas oportunas para evitarlo, podrá acordarse la reanudación total o parcial de las tareas paralizadas mediante la orden oportuna.

El personal directivo de la empresa principal o representante del mismo así como los técnicos y mandos intermedios adscritos a la obra, habrán de prohibir o paralizar, en su caso, los trabajos en que se advierta peligro inminente de accidentes o de otros siniestros profesionales, sin necesidad de contar previamente, con la aprobación del Coordinador responsable del seguimiento y control del Plan, si bien habrá de comunicársela inmediatamente dicha decisión.

A su vez, los trabajadores podrán paralizar su actividad en el caso de que, a su juicio, existiese un riesgo grave e inminente para la salud, siempre que se hubiese informado al superior jerárquico y no se hubiesen adoptado las necesarias medidas correctivas. Se exceptúan de esa obligación de información los casos en que el trabajador no pudiera ponerse en contacto de forma inmediata con su superior jerárquico. En los supuestos reseñados no podrá pedirse a los trabajadores que reanuden su actividad mientras persista el riesgo denunciado. De todo ello deberá informarse, por parte del empresario principal o su representante, a los trabajadores, con antelación al inicio de la obra o en el momento de su incorporación a ésta.

4.2.6. REGISTRO Y COMUNICACIÓN DE DATOS E INCIDENCIAS

Las anotaciones en el libro de incidencias sólo podrán ser efectuadas por la dirección facultativa de la obra, los contratistas, subcontratistas y trabajadores autónomos, las personas u órganos con responsabilidades en materia de prevención en las empresas intervinientes en la obra, los representantes de los trabajadores y técnicos de los órganos especializados en materia de seguridad y salud en el trabajo de las Administraciones públicas competentes.

Efectuada una anotación en el libro de incidencias, el Coordinador o la dirección facultativa deberá remitir en el plazo máximo de veinticuatro (24) horas una copia a la Inspección de Trabajo de la provincia en que se realiza la obra, igualmente deberá notificar las anotaciones en el libro al contratista afectado y a los representantes de los trabajadores de este.

Los partes de accidentes, notificaciones e informes relativos a la Seguridad y Salud Laboral, que se cursen por escrito por quienes estén facultados para ello, deberán ser puestos a disposición del responsable del seguimiento y control del Plan de Seguridad y Salud.

Los datos obtenidos como consecuencia de los controles e investigaciones previstos en los apartados anteriores serán objeto de registro y archivo en obra por parte del empresario, y aquellos deberá tener acceso el responsable del seguimiento y control del Plan.

4.2.7. REUNIONES DE SEGUIMIENTO Y CONTROL INTERNO

Las reuniones de seguimiento y control interno de la seguridad y salud de la obra tendrán como objetivo la consulta regular y periódica de los planes y programas de prevención de riesgos de la empresa, el análisis y evaluación continuada de las condiciones de trabajo y la promoción de iniciativas sobre métodos y procedimientos para la efectiva prevención de los riesgos, así como propiciar la adecuada coordinación entre los diversos órganos especializados que incidan en la seguridad y salud de la obra.

En las reuniones del Comité de Seguridad y Salud, cuando se hubiese constituido, participarán, con voz, pero sin voto, además de sus elementos constitutivos, los responsables técnicos de la seguridad de la empresa. Pueden participar, en las mismas condiciones, trabajadores de la empresa que cuenten con una especial cualificación o formación respecto de concretas cuestiones a debatir en dicho órgano, o técnicos en prevención ajenos a la empresa, siempre que así lo solicite alguna de las representaciones del Comité.

Sin perjuicio de lo establecido al respecto por la normativa vigente, se llevará a cabo como mínimo, una reunión mensual desde el inicio de la obra hasta su terminación, con independencia de las que fueran, además, necesarias ante situaciones que requieran una convocatoria urgente, o las que se estimen convenientes por quienes estén facultados para ello.

Salvo que se disponga otra cosa por la normativa vigente o por los Convenios Colectivos Provinciales, las reuniones se celebrarán en la propia obra y dentro de las horas de trabajo. En caso de prolongarse fuera de éstas, se abonarán sin recargo, o se retardará, si es posible, la entrada al trabajo en igual tiempo, si la prolongación ha tenido lugar durante el descanso del mediodía. Las convocatorias, orden de asuntos a tratar y desarrollo de las reuniones se establecerán de conformidad con lo estipulado al respecto por las normas vigentes o según acuerden los órganos constitutivos de las mismas.

4.3. FORMACIÓN E INFORMACIÓN

4.3.1. ACCIONES FORMATIVAS

Normas generales.

El empresario está obligado a posibilitar que los trabajadores reciban una formación teórica y práctica apropiada en materia preventiva en el momento de su contratación, cualquiera que sea la modalidad o duración de ésta, así como cuando se produzcan cambios en las funciones que desempeñen o se introduzcan nuevas tecnologías o cambios en los equipos de trabajo susceptibles de provocar riesgos para la salud del trabajador. Esta formación deberá repetirse periódicamente.

El tiempo dedicado a la formación que el empresario está obligado a posibilitar como consecuencia del apartado anterior, se lleva a cabo dentro del horario laboral o fuera de él, será considerado como tiempo de trabajo.

La formación inicial del trabajador habrá de orientarse en función del trabajo que vaya a desarrollar en la obra, proporcionándole el conocimiento completo de los riesgos que implica cada trabajo, de las protecciones colectivas adoptadas, del uso adecuado de las protecciones individuales previstas, de sus derechos y obligaciones y, en general, de las medidas de prevención de cualquier índole.

Con independencia de la formación impartida directamente a cuenta del empresario o sus representantes, en cumplimiento de lo estipulado anteriormente, se emplearán además, y como mínimo, las horas que se consideran en el presupuesto para formación de los trabajadores en la misma obra y dentro de la jornada laboral o fuera de ésta, considerando el tiempo empleado como tiempo de trabajo. A las sesiones que a tal fin se establezcan deberán asistir, también, los trabajadores de los subcontratistas.

Contenido de las acciones de formación.

A nivel de mandos intermedios, el contenido de las sesiones de formación estará principalmente integrado, entre otros, por los siguientes temas:

- Plan de seguridad y salud de la obra.
- Causas, consecuencias e investigación de los accidentes y forma de cumplimentar los partes y estadillos de régimen interior.
- Normativa sobre Seguridad y Salud Laboral. Factores técnicos y humanos
- Elección adecuada de los métodos de trabajo para atenuar el trabajo monótono y repetitivo.
- Protecciones colectivas e individuales. Socorrismo y primeros auxilios.
- Organización de la Seguridad de la obra. Responsabilidades.
- Obligaciones y derechos de los trabajadores.

A nivel de operarios, el contenido de las sesiones de formación se seleccionará fundamentalmente en función de los riesgos específicos de la obra y estará integrado principalmente, entre otros, por los siguientes temas:

- Plan de Seguridad de la obra. Riesgos específicos de la obra y medidas de prevención previstas.
- Causas y consecuencias de los accidentes.
- Normas de Seguridad.
- Señalización y circulación de obra.
- Socorrismo y primeros auxilios.
- Actitud ante el riesgo y formas de actuar en caso de accidente.
- Salud laboral.
- Obligaciones y derechos.

Organización de la acción formativa.

Las sesiones de formación serán impartidas por personal suficientemente acreditado y capacitado en la docencia de Seguridad y Salud Laboral contándose para ello con los servicios de seguridad de la empresa, representante o delegado de ésta en la obra, servicios de prevención, mutuas, organismos oficiales especializados, representantes cualificados de los trabajadores y servicio médico, propio o mancomunado, que por su vinculación y conocimientos de la obra en materia específica de seguridad y salud sean los más aconsejables en cada caso.

Se utilizarán los medios didácticos más apropiados, tales como: transparencias, diapositivas, videos, etc.

4.3.2. INSTRUCCIONES GENERALES Y ESPECIFICAS

Independientemente de las acciones de formación que hayan de celebrarse antes de que el trabajador comience a desempeñar cualquier cometido o puesto de trabajo en la obra o se cambie de puesto o se produzcan variaciones de los métodos de trabajo inicialmente provistos, deberán de facilitársela, por parte del empresario o sus representantes en la obra, las instrucciones relacionadas con los riesgos inherentes al trabajo, en especial cuando no se trate de su ocupación habitual; las relativas a los riesgos generales de la obra que puedan afectarle y las referidas a las medidas preventivas que deban observarse, así como acerca del manejo y uso de las protecciones individuales. Se prestará especial dedicación a las instrucciones referidas a aquellos trabajadores que vayan a estar expuestos a riesgos de caída de altura, atrapamientos o electrocución.

El empresario habrá de garantizar que los trabajadores de las empresas exteriores o subcontratas que intervengan en la obra han recibido las instrucciones pertinentes en el sentido anteriormente indicado.

Las instrucciones serán claras, concisas e inteligibles y se proporcionarán de forma escrita y/o de palabra, según el trabajo y operarios de que se trate y directamente a los interesados.

Las instrucciones para maquinistas, conductores, personal de mantenimiento u otros análogos se referirán, además de a los aspectos reseñados, a: restricciones de uso y empleo,

manejo, manipulación, verificación y mantenimiento de equipos de trabajo. Deberán figurar también de forma escrita en la máquina o equipo de que se trate, siempre que sea posible.

Las instrucciones sobre socorrismo, primeros auxilios y medidas a adoptar en caso de situaciones de emergencia habrán de ser proporcionadas a quienes tengan encomendados cometidos relacionados con dichos aspectos y deberán figurar, además, por escrito en lugares visibles y accesibles a todo el personal adscrito a la obra, tales como oficina de obra, comedores y vestuarios.

Las personas relacionadas con la obra, con las empresas o con los trabajadores, que no intervengan directamente en la ejecución del trabajo, o las ajenas a la obra que hayan de visitada serán previamente advertidas por el empresario o sus representantes sobre los riesgos a que pueden exponerse, medidas y precauciones preventivas que han de seguir y utilización de las protecciones individuales de uso obligatorio.

4.3.3. INFORMACIÓN Y DIVULGACIÓN

El empresario o sus representantes en la obra deberán informar a los trabajadores de:

- Los resultados de las valoraciones y controles del medioambiente laboral correspondientes a sus puestos de trabajo, así como los datos relativos a su estado de salud en relación con los riesgos a los que puedan encontrarse expuestos.
- Los riesgos para la salud que su trabajo pueda entrañar, así como las medidas técnicas de prevención o de emergencia que hayan sido adoptadas o deban adaptarse por el o, en su caso, especialmente aquélla cuya ejecución corresponde al propio trabajador y, en particular, las referidas a riesgo grave e inminente.
- La existencia de un riesgo grave e inminente que les pueda afectar, así como las disposiciones adoptadas o que deban adaptarse en materia de protección, incluyendo las relativas a la evacuación de su puesto de trabajo. Esta información, cuando proceda, deberá darse lo antes posible.
- El derecho que tienen a paralizar su actividad en el caso de que, a su juicio, existiese un riesgo grave e inminente para la salud y no se hubiesen podido poner en contacto de forma inmediata con su superior jerárquico o, habiéndolo comunicado a éste, no se hubiesen adoptado las medidas colectivas necesarias.

Las informaciones anteriormente mencionadas deberán ser proporcionadas personalmente al trabajador, dentro del horario laboral o fuera del mismo, considerándose en ambos casos como tiempo de trabajo el empleado para tal comunicación.

Así mismo, habrá de proporcionarse información a los trabajadores, por el empresario o sus representantes en la obra, sobre:

- Obligaciones y derechos del empresario y de los trabajadores.
- Funciones y facultades de los Servicios de Prevención, Comités de Salud y Seguridad y delegados de Prevención.
- Servicios médicos y de asistencia sanitaria con indicación del nombre y ubicación del centro asistencial al que acudir en caso de accidente.
- Organigrama funcional del personal al servicio de la empresa
- Organigrama funcional del personal de seguridad e higiene de la empresa adscrita a la obra y de los órganos de prevención que inciden en la misma.
- Datos sobre el seguimiento de la siniestralidad y sobre las actuaciones preventivas que se llevan a cabo en la obra por la empresa.
- Estudios, investigaciones y estadísticas sobre la salud de los trabajadores.

Toda la información referida se les suministrará por escrito a los trabajadores o, en su defecto, se expondrá en lugares visibles y accesibles a los mismos, como oficina de obra, vestuarios o comedores, en cuyo caso habrá de darse conocimiento de aquello. El empresario deberá disponer en la oficina de obra de un ejemplar del Plan de S.S.T. aprobado y de las normas y disposiciones vigentes que incidan en la obra.

En la oficina de obra se contará, también, con un ejemplar del Plan y de las normas señaladas, para ponerlos a disposición de cuantas personas o instituciones hayan de intervenir reglamentariamente, en relación con aquellos.

El empresario o sus representantes deberán proporcionar al Ingeniero Técnico responsable del seguimiento y control del Plan de Seguridad y Salud toda la información

documental relativa a las distintas incidencias que puedan producirse en relación con dicho Plan y con las condiciones de trabajo de la obra.

El empresario deberá colocar en lugares visibles de la obra rótulos o carteles anunciadores, con mensajes preventivos de sensibilización y motivación colectiva. Deberá exponer, así mismo, los que le sean proporcionados por los organismos e instituciones competentes en la materia sobre campañas de divulgación.

5. ASISTENCIA MÉDICO SANITARIA

5.1. SERVICIOS ASISTENCIALES

Prestaciones generales.

El empresario deberá asegurar en todo momento, durante el transcurso de la obra, la prestación a todos los trabajadores que concurran en la misma de los servicios asistenciales sanitarios en materia de primeros auxilios, de asistencia médico-preventiva y de urgencia y de conservación y mejora de la salud laboral de los trabajadores.

A tales efectos deberá concertar y organizar las relaciones necesarias con los servicios médicos y preventivos exteriores e interiores que correspondan, a fin de que por parte de éstos se lleven a cabo las revisiones sanitarias exigidas por las disposiciones vigentes.

Características de los servicios.

Los servicios médicos, preventivos y asistenciales deberán reunir las características establecidas por las disposiciones vigentes sobre la materia. Deberán que dar precisados en el Plan de S.S.T. los servicios a disponer para la obra, especificando todos los datos necesarios para su localización e identificación inmediata.

Accidentes.

El empresario deberá estar al corriente en todo momento, durante la ejecución de la obra, de sus obligaciones en materia de Seguridad Social y Salud Laboral de los trabajadores, de acuerdo con las disposiciones vigentes.

En el Plan de S.S.T. deberá detallarse el centro o los centros asistenciales más próximos a la obra, donde podrán ser atendidos los trabajadores en caso de accidente. Se dispondrán en lugares y con caracteres visibles para los trabajadores (oficina de obra, vestuarios, etc.) las indicaciones relativas al nombre, dirección y teléfonos del centro o centros asistenciales a los que acudir en caso de accidentes así como las distancias existentes entre éstos y la obra y los itinerarios más adecuados para llegar a ellos.

En caso de accidentes habrán de cursarse los partes correspondientes según las disposiciones vigentes, debiendo facilitar el empresario al responsable del seguimiento y control del Plan de S.S.T. una copia de los mismos y cuantos datos e informaciones complementadas le fuesen recabados por el propio responsable.

En caso de accidente, el empresario habrá de asegurar la investigación del mismo, para precisar su causa y forma en que se produjo y proponer las medidas oportunas para evitar su repetición.

5.2. MEDICINA PREVENTIVA

Reconocimientos médicos.

El empresario deberá velar por la vigilancia periódica del estado de salud laboral de los trabajadores, mediante los reconocimientos médicos o pruebas exigibles conforme a la normativa vigente, tanto en lo que se refiere a los que preceptivamente hayan de efectuarse con carácter previo al inicio de sus actividades como a los que se deban repetir posteriormente.

Los trabajadores deberán ser informados por el empresario, con carácter previo al inicio de sus actividades, de la necesidad de efectuar los controles médicos obligatorios.

Vacunaciones.

El empresario deberá facilitar y asegurar la vacunación de los trabajadores cuando fuera indicada por las autoridades sanitarias y, en general, el cumplimiento de las disposiciones que dictarán, en su caso, las mencionadas autoridades en orden a la prevención de enfermedades.

5.3. BOTIQUÍN DE OBRA

Se dispondrá de un botiquín con los medios necesarios para efectuar las curas de urgencia en caso de accidente o lesión. El botiquín deberá situarse en lugar bien visible de la obra y convenientemente señalizado.

Se hará cargo del botiquín, por designación del empresario, la persona más capacitada, que deberá haber seguido con aprovechamiento cursos de primeros auxilios y socorrismo.

La mencionada persona será la encargada del mantenimiento y reposición del contenido del botiquín, que será sometido, para ello, a una relación semanal y a la reposición de lo necesario, en orden al consumo y caducidad de los medicamentos.

El botiquín habrá de estar protegido del exterior y colocado en lugar acondicionado y provisto de cierre hermético que evita la entrada de agua y humedad. Contará, así mismo, con compartimentos o cajones debidamente señalizados en función de sus indicaciones, serán colocados de forma diferenciada, en cada uno de los compartimentos, los medicamentos que tienen una acción detallada sobre los componentes de cada aparato orgánico o acción terapéutica común.

El uso de jeringuillas y agujas para inyectables desechables sólo podrá llevarse a cabo por personal sanitario facultado para ello.

Las condiciones de los medicamentos, material de cura y quirúrgico, incluido el botiquín habrán de estar en todo momento adecuadas a los fines que han de servir, y el material será de fácil acceso, prestándose especial vigilancia a la fecha de caducidad de los medicamentos, a efectos de su sustitución cuando proceda.

En el interior del botiquín figurarán escritas las normas básicas a seguir para primeros auxilios, conducta a seguir ante un accidentado, curas de urgencia, principios de reanimación y formas de actuar ante heridas, hemorragias, fracturas, picaduras, quemaduras, etc.

5.4. NORMAS SOBRE PRIMEROS AUXILIOS Y SOCORRISMO

Con base en el análisis previo de las posibles situaciones de emergencia y accidentes que puedan producirse por las circunstancias de toda índole que concurran en la obra, el empresario deberá asegurar el diseño y el establecimiento de las normas sobre primeros auxilios y socorrismo que habrán de observarse por quienes tengan asignado el cometido de su puesta en práctica.

Las normas sobre primeros auxilios habrán de estar encaminadas a realizar el rescate y/o primera cura de los operarios accidentados, a evitar en lo posible las complicaciones posteriores y a salvar la vida de los sujetos.

Para dotar de la mayor eficacia posible a las normas que se establezcan para primeros auxilios, éstas habrán de elaborarse de manera que cumplan los siguientes preceptos: simplicidad y exactitud técnica, facilidad de comprensión y aplicación rápida y fácil, sin necesidad de medios complicados.

En las normas a establecer sobre primeros auxilios deberán recogerse los modos de actuación y las conductas a seguir ante un accidentado para casos de rescate de heridos que queden aprisionados, pérdidas del conocimiento, asfixia, heridas, hemorragias, quemaduras, electrocución, contusiones, fracturas, picaduras y mordeduras. Se especificará, para cada caso concreto: forma de manejar al herido, traslados del accidentado, posiciones convenientes, principios de reanimación y métodos de respiración artificial, primeras curas a realizar, fármacos o bebidas que deben, o no, administrarse, etc.

Todos los trabajadores deberán ser adiestrados en técnicas elementales de reanimación para que, en caso de accidente en su área de trabajo, puedan actuar rápida y eficazmente.

Así mismo, habrá de ponerse en conocimiento de todo el personal de la obra la situación de los teléfonos de urgencia, del botiquín de obra, de las normas sobre primeros auxilios y de los anuncios indicativos que hayan de exponerse en relación con la localización de servicios médicos, ambulancias y centros asistenciales.

Las normas e instrucciones sobre primeros auxilios deberán exponerse en lugares accesibles y bien visibles de la obra.

En cumplimiento de las prescripciones anteriormente establecidas y de las disposiciones vigentes que regulen la materia, el Plan de S.S.T. deberá recoger de forma detallada las normas e instrucciones a seguir para primeros auxilios.

6. PREVENCIÓN Y EXTINCIÓN DE INCENDIOS

Disposiciones generales.

Se observarán, además de las prescripciones que se establezcan en el presente Pliego, las normas y disposiciones vigentes sobre la materia. En los trabajos con riesgo específico de incendio se cumplirán, además, las prescripciones impuestas por los Reglamentos y normas técnicas generales o especiales, así como las preceptuadas por las correspondientes ordenanzas municipales.

Se deberá prever en obra un número suficiente de dispositivos apropiados de lucha contra incendios y en función de las características de la obra, dimensiones y usos de los locales y equipos que contengan, características físicas y químicas de las sustancias materiales que se hallen presentes y número máximo de personal que pueda hallarse en los lugares y locales de trabajo.

Medidas de prevención y extinción.

Además de observar las disposiciones anteriores, se adoptarán las prevenciones que se indican a continuación, combinando su empleo, en su caso, con la protección general más próxima que puedan prestar los servicios públicos contra incendios.

Uso del agua

Si existen conducciones de agua a presión se instalarán suficientes tomas o bocas de agua a distancias convenientes y cercanas a los lugares de trabajo, locales y lugares de paso del personal, colocándose junto a tal toma las correspondientes mangueras, que tendrán la sección y resistencia adecuadas.

En incendios que afecten a instalaciones eléctricas con tensión se prohibirá el empleo de extintores con espuma química, solución ácida o agua.

Extintores portátiles

En la proximidad de los puestos de trabajo con mayor riesgo de incendio y colocados en sitio visible y de fácil acceso, se dispondrán extintores portátiles, de espuma física o química, mezcla de ambas o polvos secos, según convenga a la posible causa determinante del fuego a extinguir.

Cuando se empleen distintos tipos de extintores serán rotulados con carteles indicadores del lugar y clase de incendio en que deben emplearse.

Los extintores serán revisados periódicamente y cargados, según los fabricantes, inmediatamente después de usados. Esta tarea será realizada por empresas autorizadas.

Prohibiciones

En las dependencias y lugares de trabajo con alto riesgo de incendio se prohibirá terminantemente fumar o introducir cerillas, mecheros o útiles de ignición. Esta prohibición se indicará con carteles visibles a la entrada y en los espacios libres de tales lugares o dependencias.

Se prohibirá igualmente al personal introducir o emplear útiles de trabajo no autorizados por la empresa y que puedan ocasionar chispas por contacto o proximidad a sustancias inflamables.

Otras actuaciones.

El empresario deberá prever, de acuerdo con lo fijado en el Estudio de S.S.T. en su caso y siguiendo las normas de las compañías suministradoras, las actuaciones a llevar a cabo para posibles casos de roturas de canalizaciones de agua, inundaciones, derrumbamientos y hundimientos, estableciendo en el Plan de Seguridad y Salud las previsiones y normas a seguir para tales casos de emergencia.

7. PROTECCIÓN FRENTE A CONTAMINANTES FÍSICO-QUÍMICOS

7.1. EL POLVO

Se produce generalmente en instalaciones de Machaqueo, Clasificación y Tratamiento de áridos y en Perforaciones, siendo el elemento más nocivo habitual el SiO2 (polvo de sílice) que da origen a la silicosis, pudiendo llegar a producir la grave enfermedad conocida por neumoconiosis. En relación con la cantidad de polvo inhalado, sus efectos tóxicos pueden ser:

a) Inertes. Sí el contenido en sílice del polvo ambiental es inferior al 1%.

b) Neumoconiáticos. Si el contenido en sílice es superior al 1%

Su prevención en trabajos de larga duración se realizará mediante protecciones colectivas que palien o eliminen en su origen el foco contaminante, empleándose según el proceso determinado, instalaciones especiales con métodos de: Captación, Filtraje, Sedimentación por vía húmeda, Ciclones, Extractores, Ventiladores, Renovadores de ambiente, etc.

Para casos puntuales o en defecto circunstancial de estos sistemas se emplearán protecciones individuales mediante mascarillas o equipos autónomos de respiración adecuados y estudiados de acuerdo con proceso productivo concreto.

7.2. RUIDOS

Para la protección de los trabajadores frente a los riesgos derivados de la exposición al ruido en el ambiente de trabajo se aplicará lo dispuesto en el R.D. 1316/89, de 27 de octubre, es decir, se realizarán las mediciones pertinentes y en función de los resultados de estas mediciones se aplicaran las medidas correctoras y protectoras que dispone el R.D.

7.3. VIBRACIONES

La erradicación del riesgo depende en gran medida de las mejoras técnicas que puedan incorporarse como resultado de un tratamiento integral del ruido y de las vibraciones. En ausencia de criterios más concretos, se equipará con cinturones antivibratorios a los operarios expuestos a posibles movimientos vibratorios de frecuencia inferior a 100 Hz.

7.4. RADIACIONES

En el caso de que, dentro de una zona de las obras, exista riesgo de exposición dentro del campo de alcance de algún foco emisor de radiaciones ionizantes, se tomarán las medidas necesarias para que el personal de obra se encuentre, de manera permanente lo más alejado posibles del foco emisor, llegando a interponer barreras compactas constituidas por materiales fuertemente absorbentes (plomo, hormigón, etc.), si fuese necesario.

El personal especializado que por motivos imperativos, deba acercarse y/o manipular el foco emisor deberá ir perfectamente equipado con buzo de seguridad, mandiles, guantes y manguitos especiales antionizantes, debiendo limitarse su tiempo de exposición en función de la naturaleza del foco emisor y las instrucciones dictadas por la reglamentación vigente, en uso.

7.5. RIESGO ELÉCTRICO

El análisis detallado de las lesiones producidas por electrocución, ha demostrado que los factores determinantes de la gravedad de las mismas son la intensidad de la corriente que circula por el cuerpo humano y la duración de la descarga.

Como valor general de intensidad-tiempo que es inócuo a la mayoría de las personas se puede tomar 30 Ma durante 3sg., que en adelante denominaremos valor de seguridad. Teniendo en cuenta el valor de Seguridad y la resistencia media que ofrece el cuerpo humano (500 ohm. en locales secos, 1.500 ohm. en lugares húmedos) obtendremos las siguientes tensiones de seguridad:

- Locales secos: 1.55 ohm. x 0,03 A = 45 V.
- Locales húmedos: 500 ohm. x 0,003 A = 15 V.

Métodos de prevención:

Los métodos de prevención se adoptarán con objeto de prevenir los contactos eléctricos, con el fin de evitar que circules por la persona corrientes peligrosas, para lo cual se actuará modificando o controlando los valores de los cuatro parámetros que definen el riesgo eléctrico (tensión, resistencia, tiempo de exposición, intensidad) tratando de alcanzar los siguientes objetivos:

- Disminución de la tensión aplicada (tensiones menores de 15 V., ó 45 V., según los casos).
- Aumento de la resistencia que ofrece el cuerpo humano (Aislamiento).
- Disminución del tiempo de actuación de la corriente sobre el cuerpo humano (mediante el seccionamiento del circuito con interruptor diferencial y/o magnetotérmico).
- Imposibilidad de que exista el contacto eléctrico (Doble aislamiento).
- Imposibilidad de que circule por el cuerpo humano corriente alguna (interruptor del circuito de retomo: Centro de la estrella o grupo de transformación o equipo generador, transformador con separación de circuitos, etc.)

8. LOCALES Y SERVICIOS DE HIGIENE Y BIENESTAR

En el Plan de Seguridad y Salud deberán quedar fijados de forma detallada y en función del programa de trabajos, personal y dispositivos de toda índole presentados por la empresa los emplazamientos y características de los servicios de higiene y bienestar.

Cualquier modificación de las características y/o emplazamiento de dichos locales que se plantee una vez aprobado el Plan de S.S.T. requerirá la modificación del mismo, así como su posterior informe y aprobación en los términos establecidos por las disposiciones vigentes.

Burgos, Febrero de 2.012

AUTORES DEL PROYECTO

D. Sergio Agustín Ratón Alomar

Dña. Miriam Sacristán Terradillos

Dña. Raquel Estrada Merino

D. Alfonso Cid González

PLANOS

MANEJO DE MATERIALES

ACCIONES PELIGROSAS

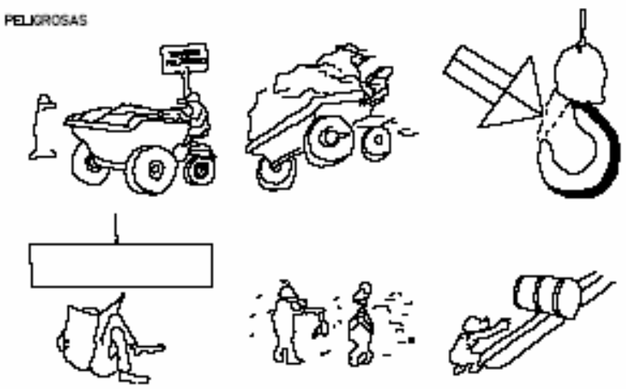

CONDICIONES PELIGROSAS

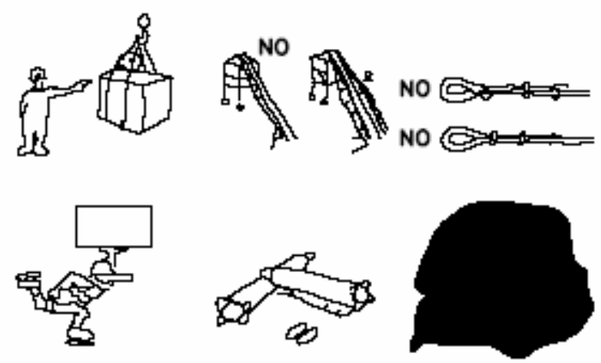

MANEJO DE CARGAS

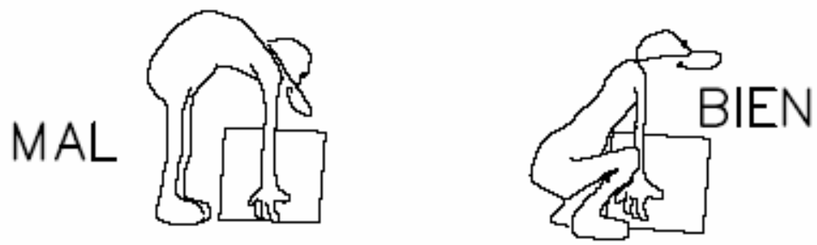

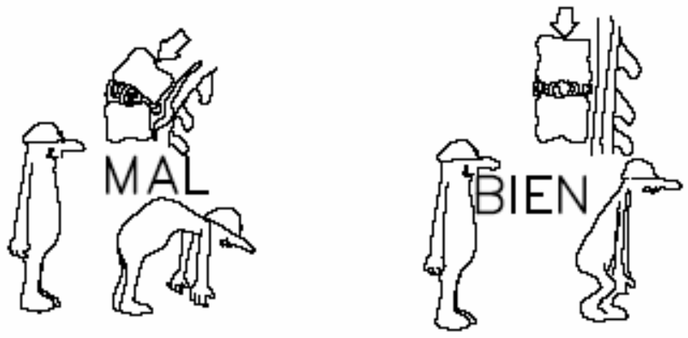

MEDIDAS DE SEGURIDAD
MANEJO DE MATERIALES Y CARGAS
SIN ESCALA

TIPOS DE ESLINGAS

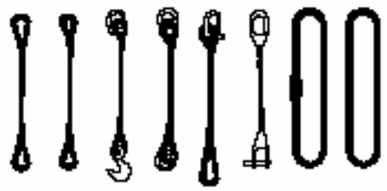

GAZAS

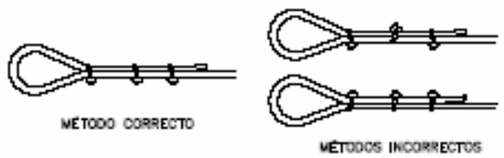

Diámetro del Cable	Número de Pernillos	Distancia entre Pernillos
Hasta 12 mm	3	6 Diámetros
12 mm a 20 mm	4	6 Diámetros
20 mm a 25 mm	5	6 Diámetros
25 mm a 35 mm	6	6 Diámetros

MANEJO DE MATERIALES
LA MISMA ESLINGA

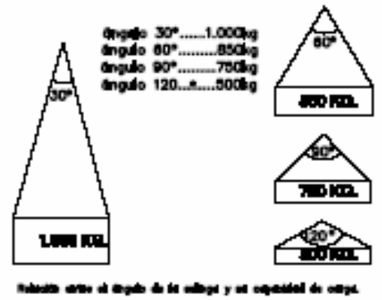

Relación entre el ángulo de la eslinga y su capacidad de carga.

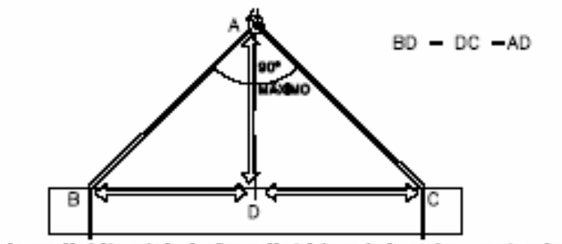

La carga debe ir bien centrada y la eslinga no debe trabajar con ángulos superiores a noventa grados.

MEDIDAS DE SEGURIDAD
TIPO DE ESLINGAS Y MANEJO DE ESTAS
SIN ESCALA

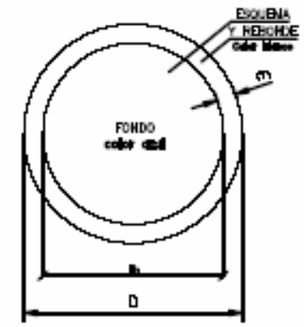

DIMENSIONES EN mm		
D	D_i	m
594	534	30
420	378	21
297	267	15
210	188	11
148	132	8
105	87	5

PROTECCIONES COLECTIVAS
SEÑALES DE OBLIGACIÓN
SIN ESCALA

SEÑALES DE ADVERTENCIA DE PELIGRO

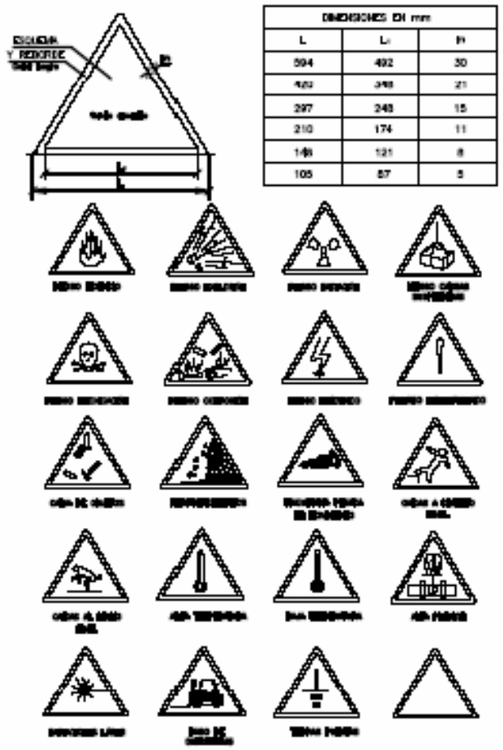

DIMENSIONES EN mm		
L	L_1	h
594	492	30
420	348	21
297	246	15
210	174	11
148	121	8
105	87	5

SEÑALES DE PROHIBICIÓN

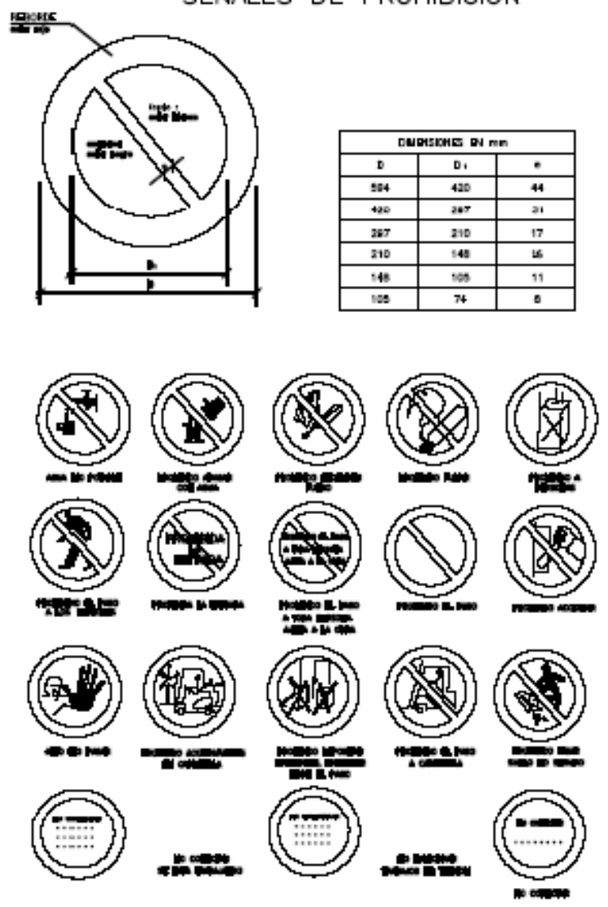

DIMENSIONES EN mm		
D	D_1	e
594	420	44
420	297	31
297	210	17
210	148	15
148	105	11
105	74	8

MEDIDAS DE SEGURIDAD
SEÑALES DE ADVERTENCIA DE PELIGRO
SEÑALES DE PROHIBICIÓN
SIN ESCALA

EXCAVACIÓN

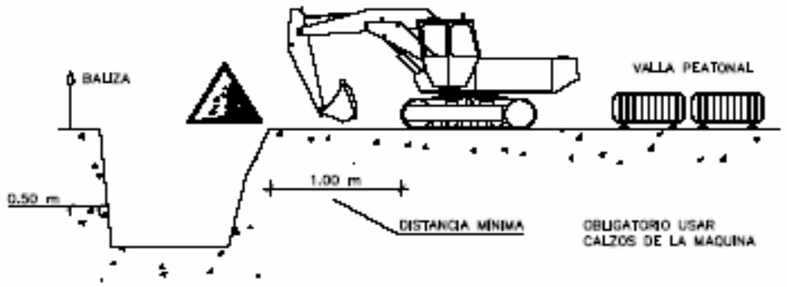

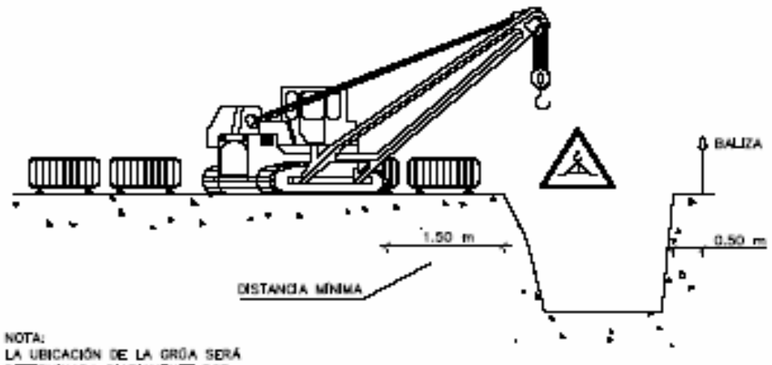

NOTA:
LA UBICACIÓN DE LA GRÚA SERÁ
DETERMINADA DIARIAMENTE POR
EL TECNICO DE SEGURIDAD

ELEMENTOS VIBRATORIOS

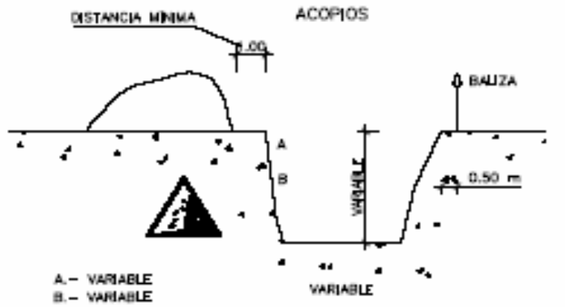

ACOPIOS

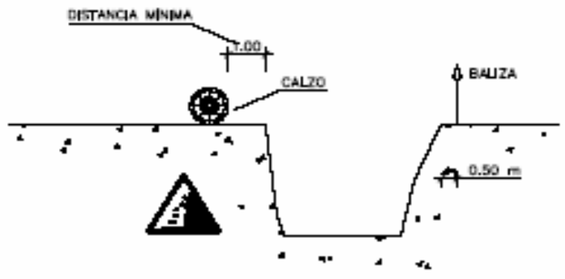

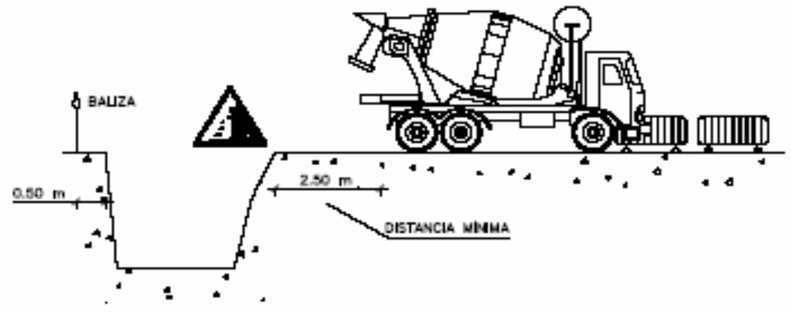

PROTECCIONES COLECTIVAS
EJECUCIÓN DE EXCAVACIONES
SIN ESCALA

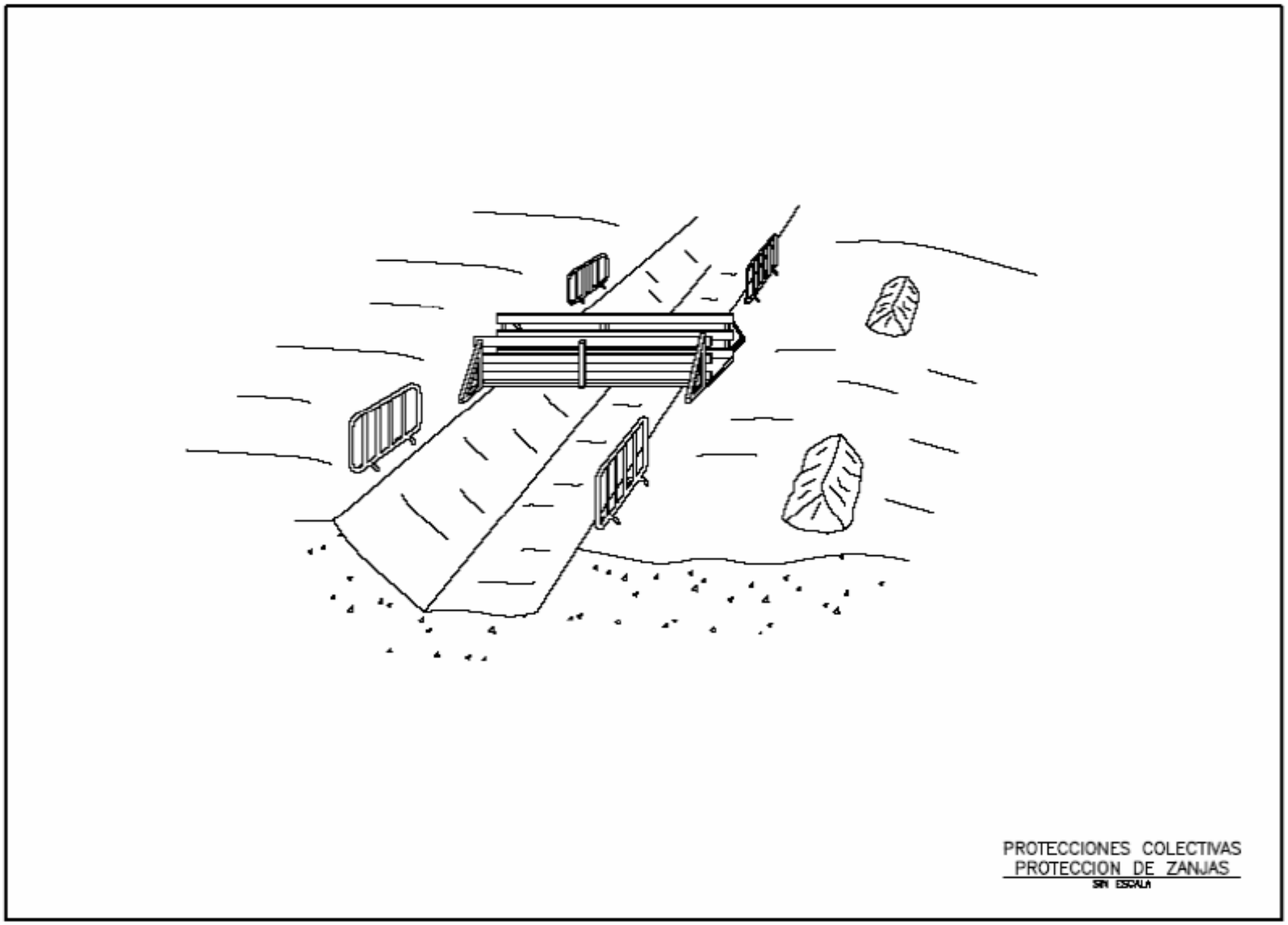

PROTECCIONES COLECTIVAS
PROTECCION DE ZANJAS
SIN ESCALA

PANELES DIRECCIONALES
PARA CURVAS

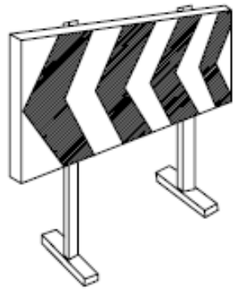

PANELES DIRECCIONALES
PARA OBRAS

VALLA EXTENSIBLE

VALLA DE CONTENCION
DE PEATONES

VALLA DE OBRA
MODELO 2

VALLA DE OBRA
MODELO 1

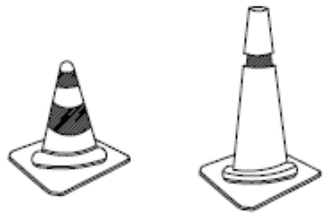

CONOS

CINTA DE BALIZAMIENTO

OBREROS

CONTIENE LA LEYENDA
INDICADA DE OBRA

CORDON DE BALIZAMIENTO
NORMAL Y REFLEXIVO

HITO LUMINOSO

LAMPARA AUTONOMA FIJA
INTERMITENTE

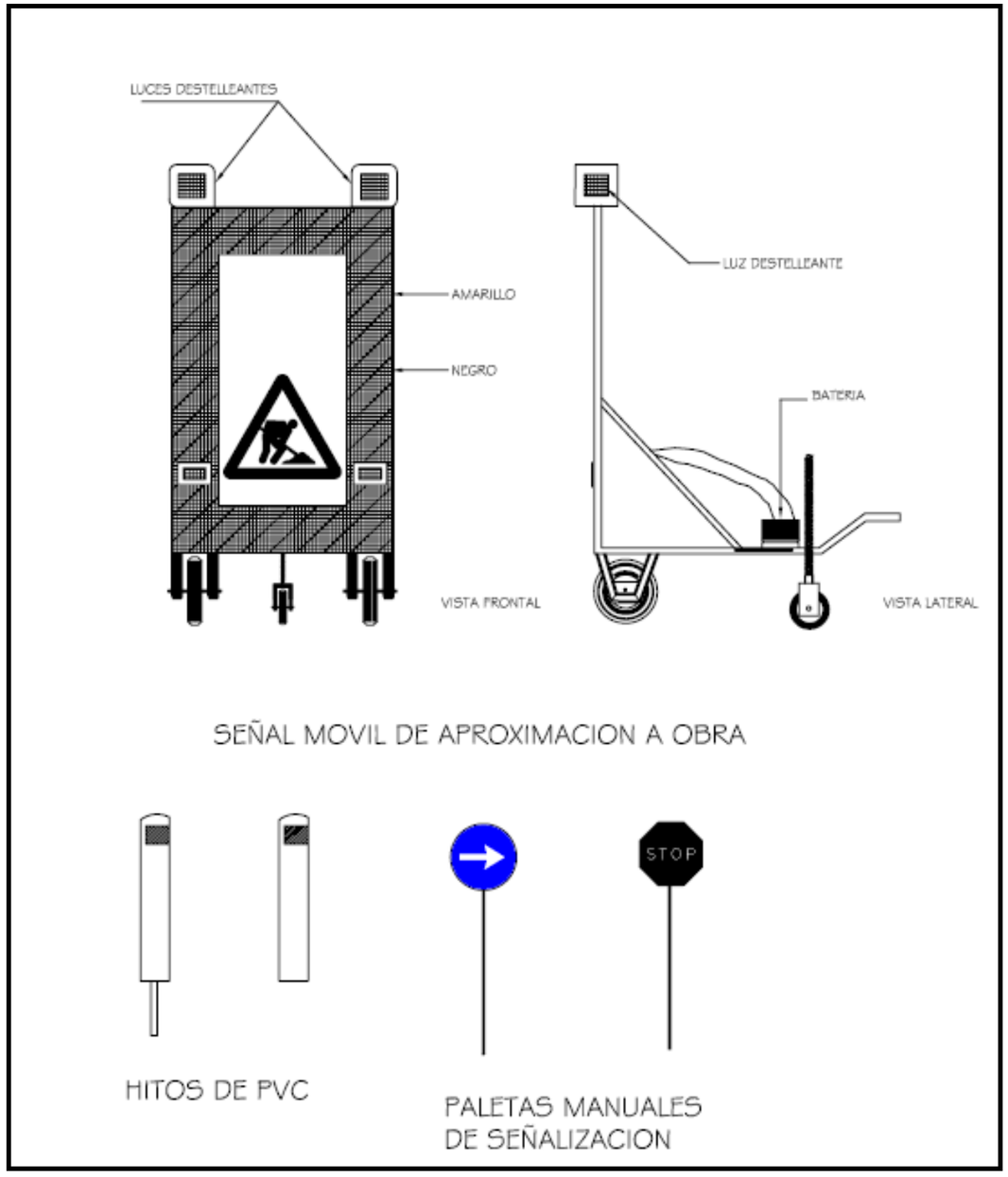
LUCES DESTELLEANTES
AMARILLO
NEGRO
VISTA FRONTAL
LUZ DESTELLEANTE
BATERIA
VISTA LATERAL
SEÑAL MOVIL DE APROXIMACION A OBRA
STOP
HITOS DE PVC
PALETAS MANUALES
DE SEÑALIZACION

SEÑALES DE ADVERTENCIA

Forma Señal: Diseño	Colores: Fondo	Colores: Contraste	Señal Combinada
CAIDA DE OBJETOS	AMARILLO	NEGRO	
PELIGRO INDETERMINADO	AMARILLO	NEGRO	
RIESGO DE INTOXICACION SUSTANCIAS TOXICAS	AMARILLO	NEGRO	
RIESGO DE CAIDAS SUSPENDIDAS	AMARILLO	NEGRO	
RIESGO DE EXPLOSION MATERIAS EXPLOSIVAS	AMARILLO	NEGRO	
RIESGO DE INCENDIO MATERIAS INFLAMABLES	AMARILLO	NEGRO	

Forma Señal: Diseño	Colores: Fondo	Colores: Contraste	Señal Combinada
PELIGRO ELECTRICO	AMARILLO	NEGRO	
RIESGO DE CORROSION SUSTANCIAS CORROSIVAS	AMARILLO	NEGRO	
CAIDA A MISMO NIVEL	AMARILLO	NEGRO	
CAIDA A DISTINTO NIVEL	AMARILLO	NEGRO	
MAQUINARIA PESADA EN MOVIMIENTO	AMARILLO	NEGRO	
OCUPACIONAL	AMARILLO	NEGRO	

SEÑALES DE OBLIGACION

Forma Señal: Diseño	Colores: Fondo	Colores: Contraste	Señal Combinada
USO OBLIGATORIO DE PROTECTORES AUDITIVOS	AZUL	BLANCO	
USO OBLIGATORIO DE GAFAS O PANTALLAS	AZUL	BLANCO	
USO OBLIGATORIO DE GUANTES	AZUL	BLANCO	
USO OBLIGATORIO DE BOTAS DE SEGURIDAD	AZUL	BLANCO	
USO OBLIGATORIO DE CINTURON DE SEGURIDAD	AZUL	BLANCO	
OBLIGATORIO ELIMINAR FUMIVEL	AZUL	BLANCO	
USO OBLIGATORIO DE MASCARILLA	AZUL	BLANCO	
USO OBLIGATORIO DE CASCO PROTECTOR	AZUL	BLANCO	
USO OBLIGATORIO DE GUANTES AISLANTES	AZUL	BLANCO	
USO OBLIGATORIO DE BOTAS AISLANTES	AZUL	BLANCO	

SEÑALES DE PROHIBICION

Forma Señal: Diseño	Colores: Fondo	Colores: Contraste	Señal Combinada
PROHIBIDO FUMAR	ROJO	BLANCO	
PROHIBIDO APAGAR CON AGUA	ROJO	BLANCO	
PROHIBIDO FUMAR Y ENCENDER FUEGO	ROJO	BLANCO	

Forma Señal: Diseño	Colores: Fondo	Colores: Contraste	Señal Combinada
PROHIBIDO PASAR A LOS PEATONES	ROJO	BLANCO	
AGUA NO POTABLE	ROJO	BLANCO	

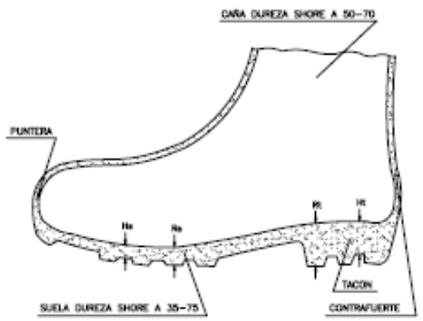

Hs Hendidura de la suela = 5 mm
Rs Resalte de la suela = 5 mm
Hr Hendidura del tacon = 20 mm
Rr Resalte del tacon = 25 mm

BOTA IMPERMEABLE AL AGUA Y A LA HUMEDAD

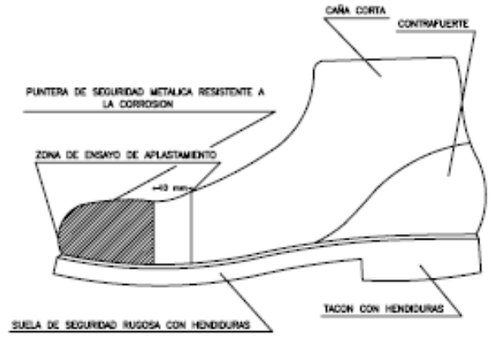

BOTA DE SEGURIDAD CLASE III

① MATERIAL INCOMBUSTIBLE RESISTENTE A GRASAS,SALES Y AGUA
② CLASE N AISLANTE A 000V. CLASE E AT AISLANTE A 25000V.
③ MATERIAL NO RIGIDO HIDROFUGO FACIL LIMPIEZA Y DESINFECCION

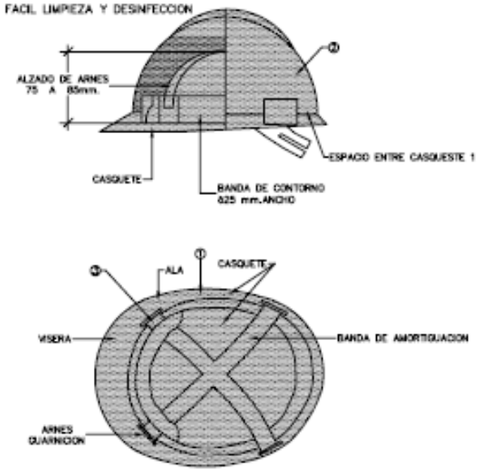

CASCO DE SEGURIDAD NO METALICO

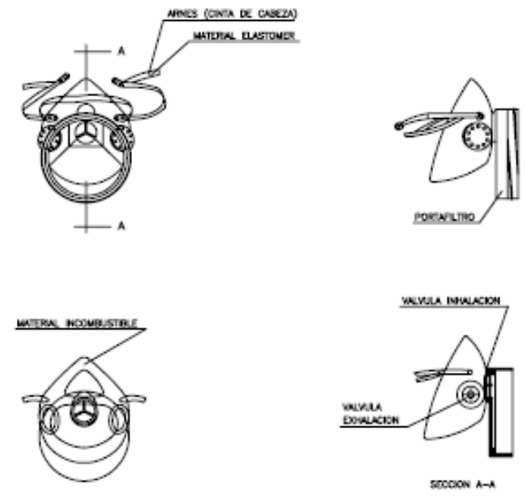

MASCARILLA ANTIPOLVO

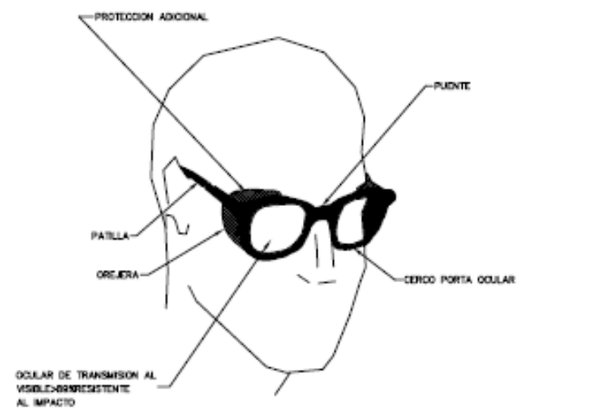

LENTES DE MONTURA TIPO UNIVERSAL CONTRA IMPACTOS

FORMA DE CARGA MANUAL

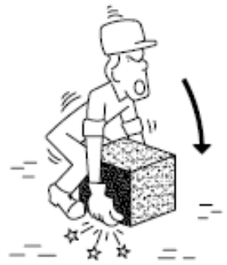

INCORRECTO

CORRECTO

MANIPULACION DE ELEMENTOS EN LA OBRA

INCORRECTO

CORRECTO

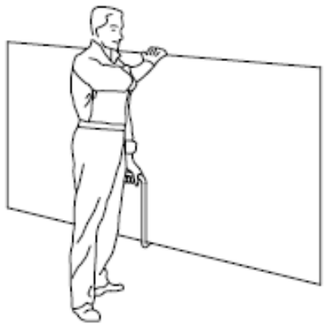

TRANSPORTE DE PLACAS

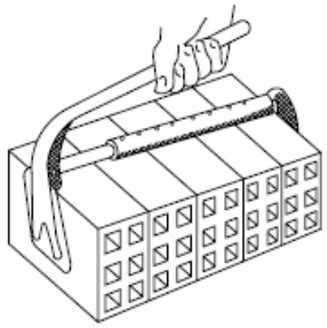

PINZA PARA LADRILLOS

INCORRECTO

CORRECTO

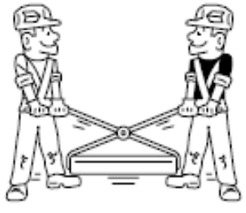

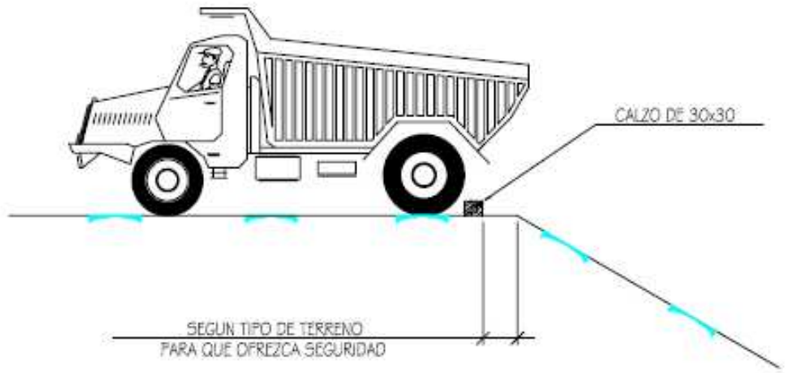

CONJUNTO

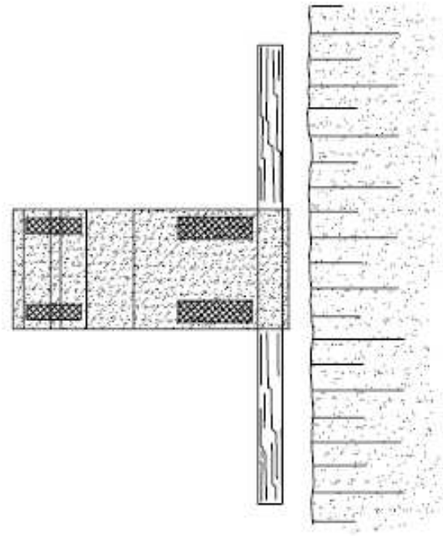

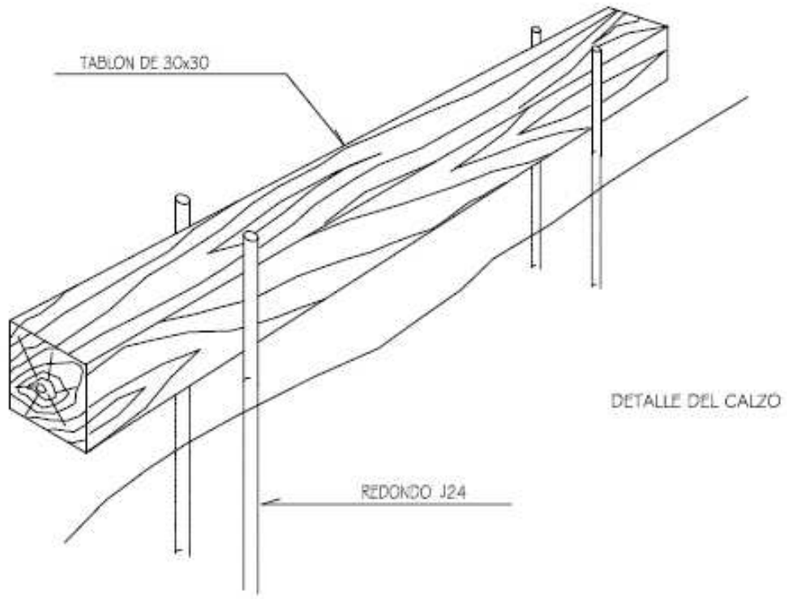

DETALLE DEL CALZO

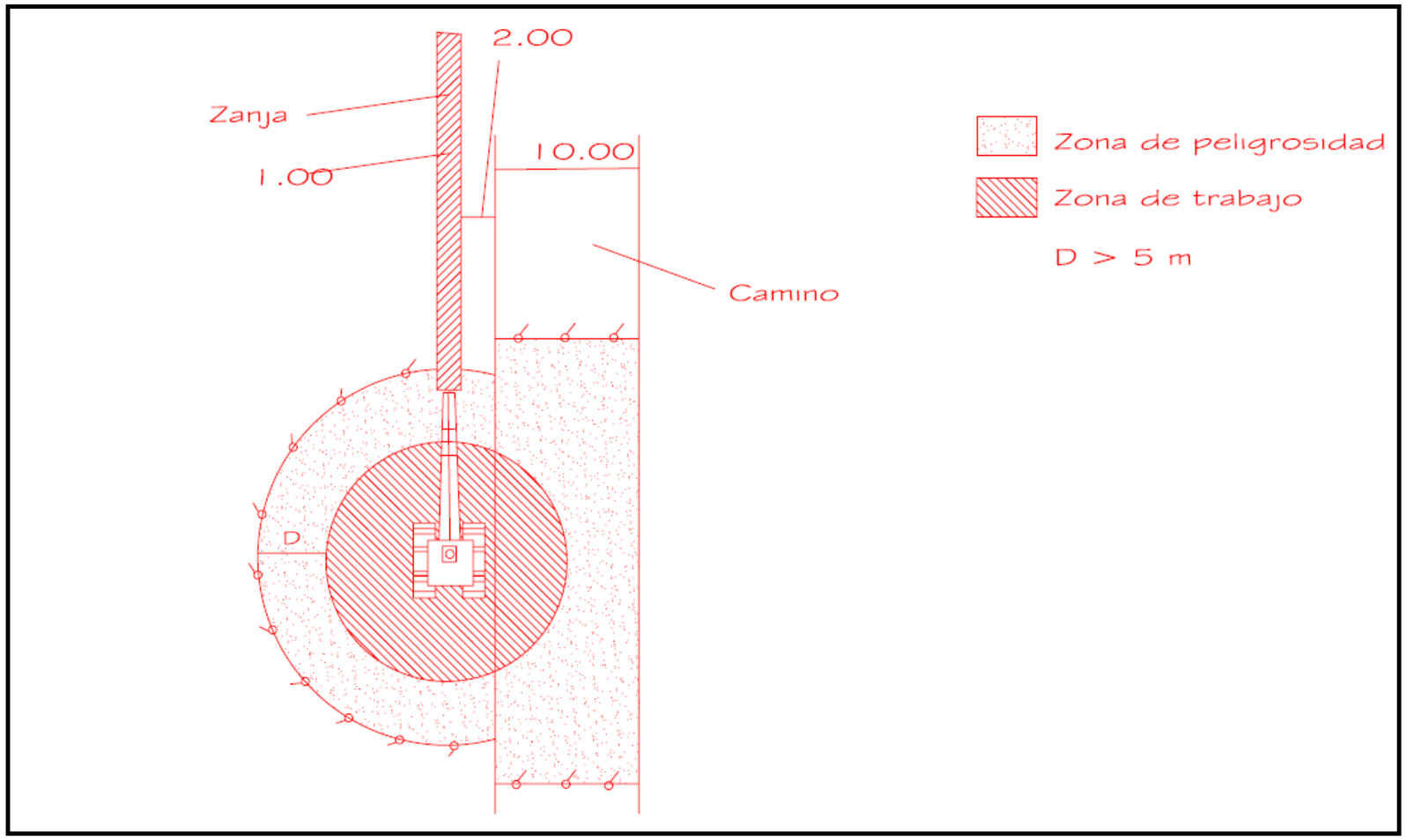
2.00
Zanja
1.00
10.00
Camino
D
Zona de peligrosidad
Zona de trabajo
D > 5 m

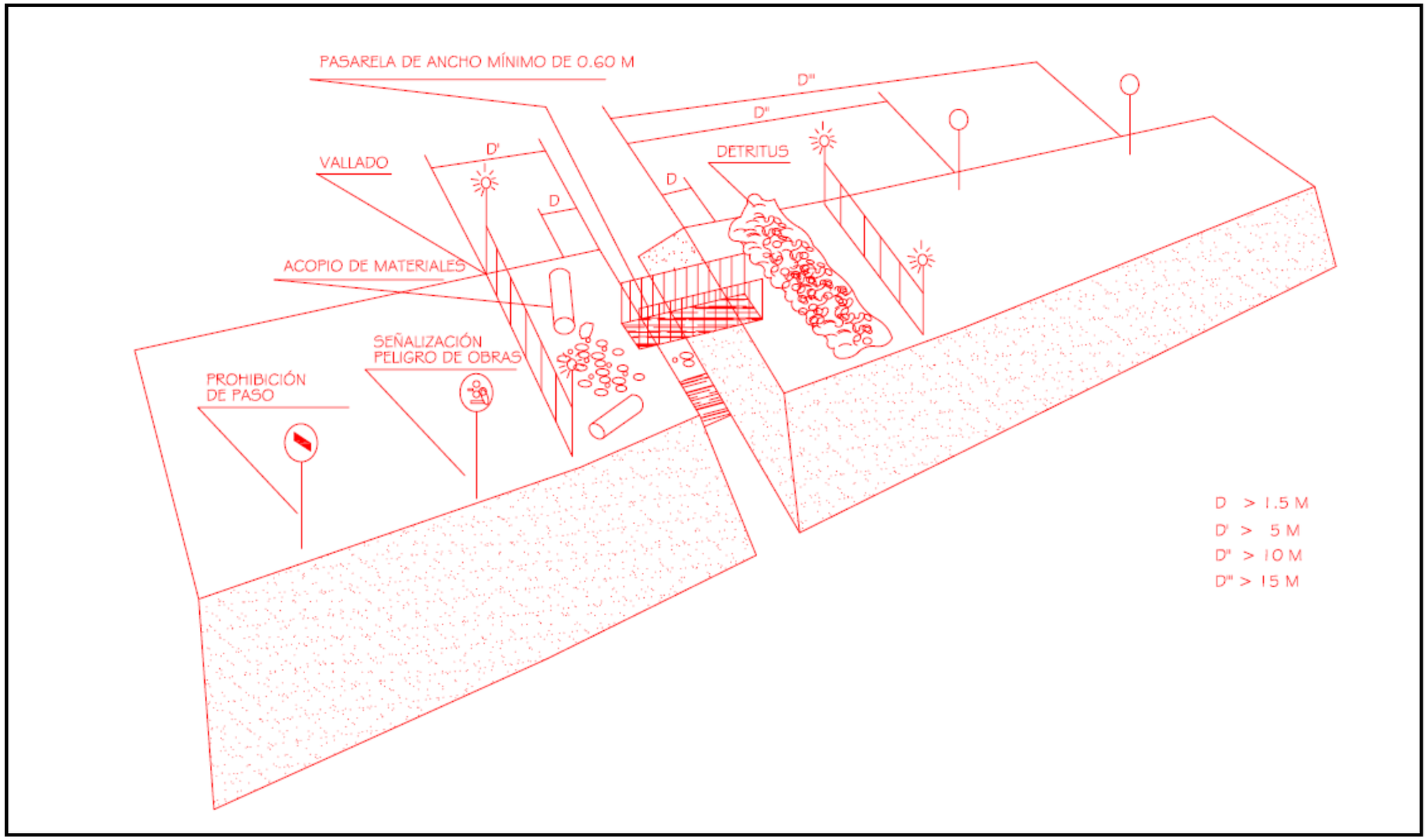
PASARELA DE ANCHO MÍNIMO DE 0.60 M
D'''
D''
VALLADO
D'
DETRITUS
D
D
ACOPIO DE MATERIALES
SEÑALIZACIÓN
PELIGRO DE OBRAS
PROHIBICIÓN
DE PASO
D > 1.5 M
D' > 5 M
D'' > 10 M
D''' > 15 M

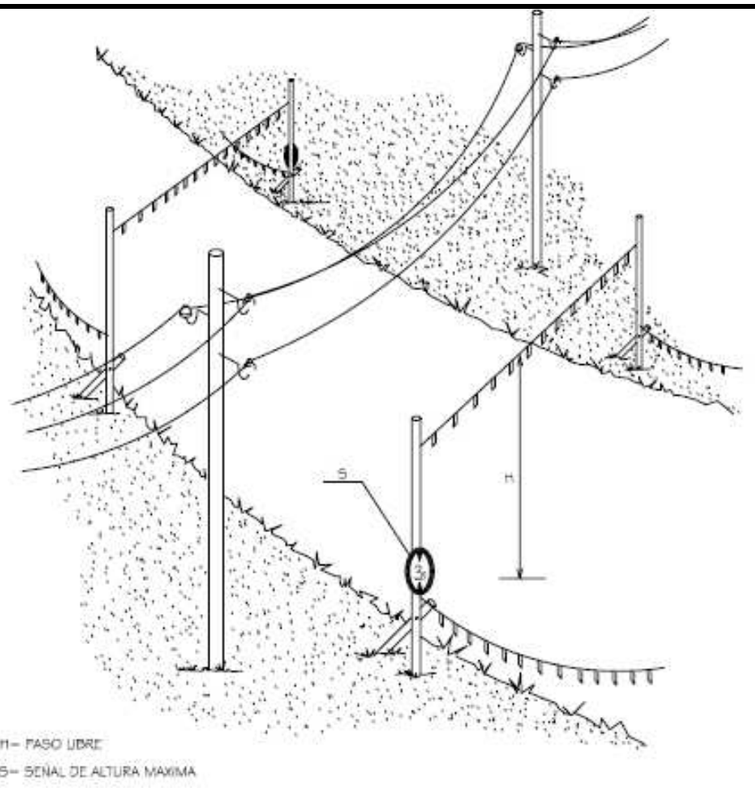

DISPOSICION DE BALIZAS

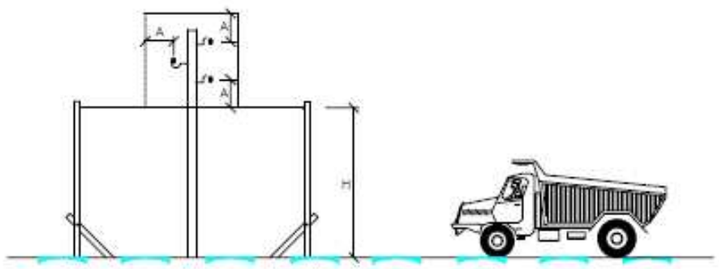

GALIBO DE SEGURIDAD
PARA
CIRCULACIUON DE VEHICULOS BAJO LINEAS DE A.T. < 70 KV

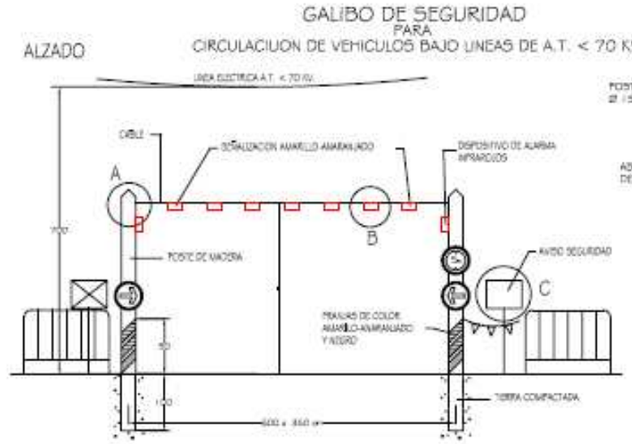

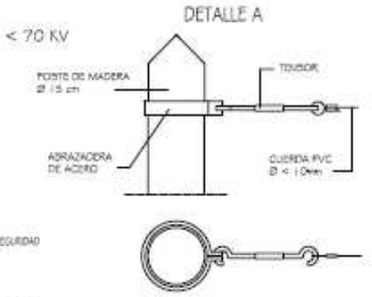

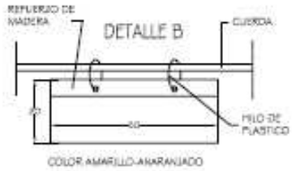

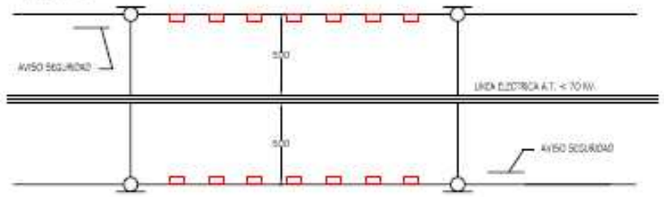

DETALLE C

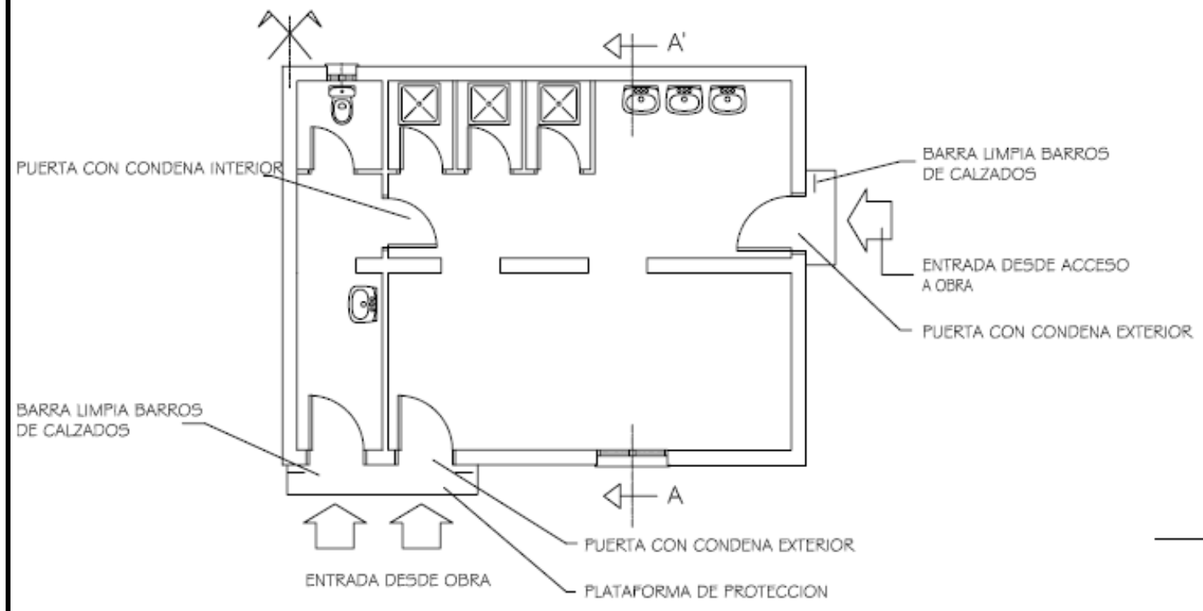

PLANTA GENERAL

CASETA-VESTUARIO

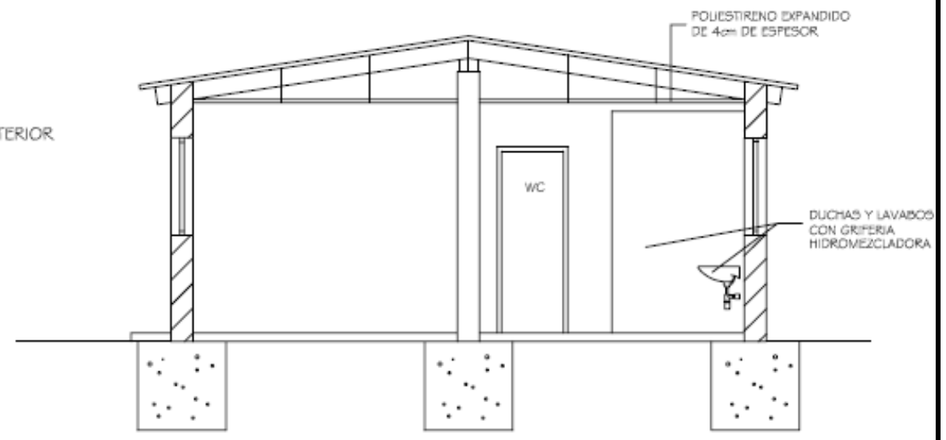

SECCION A-A'
CASETA-VESTUARIO

GRUPOS ELECTROGENOS

ESQUEMA DE UNA INSTALACION CONECTADA
A UN GRUPO ELECTROGENO EN ESTRELLA

A) CON CENTRO A TIERRA

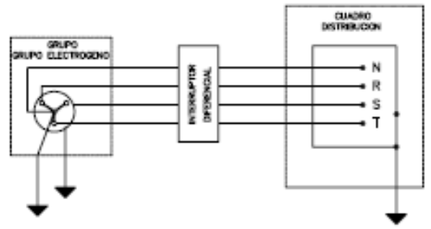

ESQUEMA DE UNA INSTALACION CONECTADA
A UN GRUPO ELECTROGENO EN ESTRELLA

B) CON EL HILO DE TIERRA DEL CUADRO
DISTRIBUIDOR

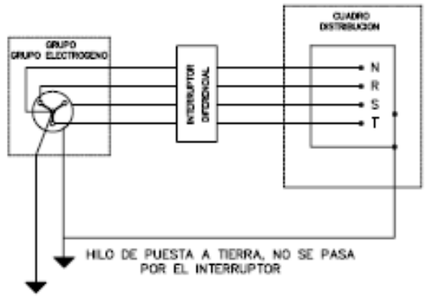

- LOS GRUPOS ELECTROGENOS TENDRAN EL NEUTRO ACCESIBLE Y CON POSIBILIDAD DE SER DISTRIBUIDO.
- EL NEUTRO ESTARA CONEXIONADO A TIERRA, ANTES DEL DIFERENCIAL.
- LA CARCASA DEL GRUPO LLEVARA UNA TOMA A TIERRA INDEPENDIENTE DEL NEUTRO.
- EL CUADRO DE DISTRIBUCION TENDRA TIERRA INDEPENDIENTE O CONECTADA A LA DE LA CARCASA DEL GRUPO.

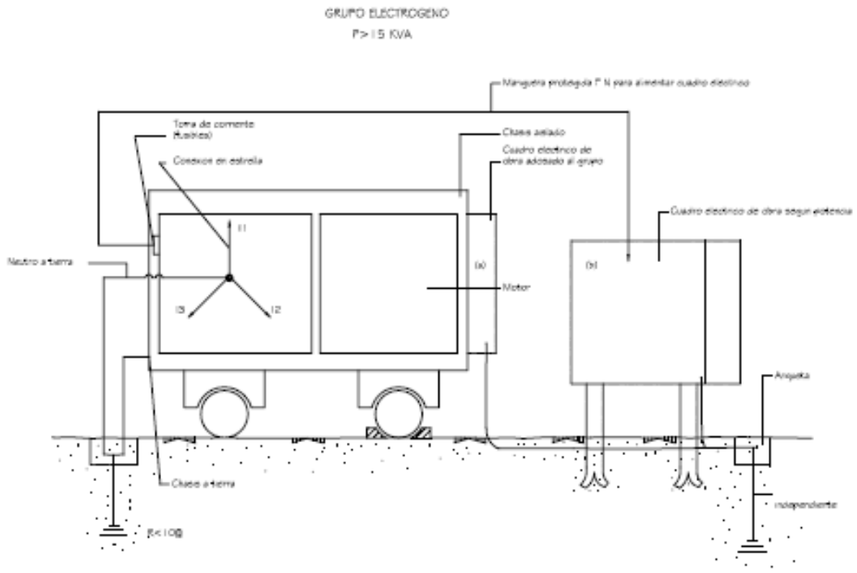

Burgos, Febrero de 2.012

AUTORES DEL PROYECTO

D. Sergio Agustín Ratón Alomar

Dña. Miriam Sacristán Terradillos

Dña. Raquel Estrada Merino

D. Alfonso Cid González

PRESUPUESTO

ÍNDICE

Página

1. **MEDICIONES** **88**
2. **CUADRO DE PRECIOS Nº 1** **90**
3. **CUADRO DE PRECIOS Nº 2** **92**
4. **PRESUPUESTO** **95**
5. **RESUMEN DE PRESUPUESTO** **98**

1. MEDICIONES

CÓDIGO	RESUMEN	UDS	LONGITUD	ANCHURA	ALTURA	PARCIALES	CANTIDAD
	CAPÍTULO 01 PROTECCIONES INDIVIDUALES						
01.01	**ud CASCO DE SEGURIDAD**						
	Casco de seguridad con arnés de adaptación. Certificado CE. s/R.D. 773/97 y R.D. 1407/92.						20,00
01.02	**ud MONO DE TRABAJO POLIESTER-ALGODÓN**						
	Mono de trabajo de una pieza de poliéster-algodón. Certificado CE. s/R.D. 773/97 y R.D. 1407/92.						20,00
01.03	**ud TRAJE AGUA VERDE INGENIERO**						
	Traje de agua color verde tipo ingeniero (amortizable en un uso). Certificado CE. s/R.D. 773/97 y R.D. 1407/92.						20,00
01.04	**ud PAR DE BOTAS DE SEGURIDAD**						
	Par de botas de seguridad con plantilla y puntera de acero. Certificado CE. s/R.D. 773/97 y R.D. 1407/92.						20,00
01.05	**ud CINTURÓN PORTA-HERRAMIENTAS**						
	Cinturón portaherramientas. Certificado CE. s/R.D. 773/97 y R.D. 1407/92.						8,00
01.06	**ud SEMI MASCAR. ANTIPOLVO 2 FILTROS**						
	Semi-mascarilla antipolvo doble filtro. Certificado CE. s/R.D. 773/97 y R.D. 1407/92.						20,00
01.07	**ud JUEGO TAPONES ANTIRUIDO SILIC.**						
	Juego de tapones antiruído de silicona ajustables. Certificado CE. s/R.D. 773/97 y R.D. 1407/92.						20,00
01.08	**ud PAR GUANTES DE LONA**						
	Par guantes de lona protección estándar. Certificado CE. s/R.D. 773/97 y R.D. 1407/92.						20,00
01.09	**ud PAR GUANTES DE LÁTEX-ANTIC.**						
	Par guantes de goma látex-anticorte. Certificado CE. s/R.D. 773/97 y R.D. 1407/92.						20,00
01.10	**ud FAJA DE PROTECCIÓN LUMBAR**						
	Faja protección lumbar. Certificado CE EN385. s/R.D. 773/97 y R.D. 1407/92.						20,00
01.11	**ud PANTALLA CONTRA PARTÍCULAS**						
	Pantalla para protección contra partículas, con sujeción en cabeza. Certificado CE. s/R.D. 773/97 y R.D. 1407/92.						4,00
01.12	**ud GAFAS CONTRA IMPACTOS**						
	Gafas protectoras contra impactos, incoloras. Certificado CE. s/R.D. 773/97 y R.D. 1407/92.						4,00
01.13	**ud CHALECO SALVAVIDAS**						
	Chaleco salvavidas ergonómico (amortizable en un uso). Certificado CE. s/R.D. 773/97 y R.D. 1407/92.						3,00
01.14	**ud PANTALLA SEGURIDAD SOLDADOR**						
	Pantalla manual de seguridad para soldador, con fijación en cabeza. Certificado CE. s/R.D. 773/97 y R.D. 1407/92.						4,00
01.15	**ud MANDIL CUERO PARA SOLDADOR**						
	Mandil de cuero para soldador. Certificado CE. s/R.D. 773/97 y R.D. 1407/92.						4,00
01.16	**ud PAR DE POLAINAS SOLDADURA**						
	Par de polainas para soldador. Certificado CE. s/R.D. 773/97 y R.D. 1407/92.						4,00

CÓDIGO	RESUMEN	UDS	LONGITUD	ANCHURA	ALTURA	PARCIALES	CANTIDAD
	CAPÍTULO 02 PROTECCIONES COLECTIVAS						
02.01	**mes ALQUILER CONTENEDOR ESCOMBRO**						
	Mes de alquiler de contenedor para depositar escombro situado en la vía pública.						9,00
02.02	**m2 MONTAJE ANDAMIO METALICO**						
	Alquiler, montaje y desmontaje de andamio metálico de perfil europeo, formado por montantes, y arriostramientos de acero, incluso plataformas de trabajo de chapa, así como módulo con escalera, con zócalo y antepecho de protección contra caídas, con plataforma cerrada a nivel de planta baja y red perimetral para recogida de cascotes, incluso p.p. de arriostramientos a fachadas o muro de hormigón, y p.p. de medios auxiliares y trabajos previos de limpieza para apoyos. Según normativa CE y R.D. 2177/2004.						100,00
02.03	**m VALLA FIJA GALVANIZADA**						
	Vallado fijo de 2,00 m. de altura realizado con malla simple torsión galvanizada y postes de tubo de acero galvanizado i, p.p. de postes de esquina, jabalcones, tornapuntas, tensores, grupillas y accesorios, montada i/replanteo y recibido de postes con hormigón y posterior retirada al finalizar la obra.						50,00

02.04 **m BARANDILLA TUBO**

Barandilla de protección: excavaciones, laterales del tablero y huecos s/ R.D. 486/97.

200,00

02.05 **Ml CINTA DE BALIZAMIENTO R/B**

Ml. Cinta corrida de balizamiento plástica pintada a dos colores roja y blanca, incluso colocación y desmontado.

200,00

02.06 **ud PICTOGRAMAS**

Pictogramas colocados a lo largo del vallado perimetral (rogamos disculpen las molestias, peligro, desprendimientos, prohibido el paso a toda persona ajena a la obra).

2,00

02.07 **ud PALETA MANUAL 2 CARAS STOP-OBL.**

Señal de seguridad manual a dos caras: Stop-Dirección obligatoria, tipo paleta. s/R.D. 485/97.

2,00

02.08 **m MALLA POLIETILENO**

Malla de polietileno alta densidad con tratamiento antiultravioleta, color naranja de 1 m. de altura, tipo stopper, i/colocación desmontaje, amortizado tres usos s/ R.D. 486/97.

200,00

02.09 **ud SEÑAL NORMALIZADA TRAFICO**

Señal normalizada de tráfico con soporte metálico incluso colocación.

4,00

CÓDIGO	RESUMEN	UDS	LONGITUD	ANCHURA	ALTURA	PARCIALES	CANTIDAD

CAPÍTULO 03 INSTALACIONES HIGIENE Y BIENESTAR

03.01 **mes ALQUILER CASETA OFIC.+VEST.**

Mes de alquiler (min. 05 meses) de caseta prefabricada para un despacho de oficina, vestuarios y un aseo con inodoro y lavabo. Estructura y cerramiento de chapa galvanizada pintada, aislamiento de poliestireno expandido autoextinguible, interior con tablero melaminado en color. Cubierta en arco de chapa galvanizada ondulada reforzada con perfil de acero; fibra de vidrio de 60 mm., interior con tablex lacado. Suelo de aglomerado revestido con PVC continuo de 2 mm., y poliestireno de 50 mm. con apoyo en base de chapa galvanizada de sección trapezoidal. Puerta de 0,8x2 m., de chapa galvanizada de 1 mm., reforzada y con poliestireno de 20 mm., picaporte y cerradura. Ventana aluminio anodizado corredera, contraventana de acero galvanizado. Instalación eléctrica 220 V., toma de tierra, automático, 2 fluorescentes de 40 W., enchufes para 1500 W. y punto luz exterior de 60 W. Con transporte a 150 km.(ida y vuelta). Entrega y recogida del módulo con camión grúa. Según R.D. 486/97.

9,00

CÓDIGO	RESUMEN	UDS	LONGITUD	ANCHURA	ALTURA	PARCIALES	CANTIDAD

CAPÍTULO 04 INSTALACIONES PROVISIONALES

04.01 **ud INSTALACIONES PROVISIONALES**

Precio de ejecución de todas las instalaciones provisionales necesarias para la correcta ejecución de la obra. Dentro de estas instalaciones provisionales se encuentran la acometida electrica, la acometida de fontaneria, la acometida de saneamiento, la acometida de telefono, además de toma de tierra y cuadro general y secundario de obra.

1,00

CÓDIGO	RESUMEN	UDS	LONGITUD	ANCHURA	ALTURA	PARCIALES	CANTIDAD

CAPÍTULO 05 PROTECCION CONTRAINCENDIOS

05.01 **ud EXTINTOR CO2**

Extintor de CO2 de 2 Kg, en oficinas de obra.

3,00

05.02 **ud EXTINTOR POLIVALENTE**

Extintor polivalente de 3.5 Kg situados en instalaciones de personal,

3,00

CÓDIGO	RESUMEN	UDS	LONGITUD	ANCHURA	ALTURA	PARCIALES	CANTIDAD

CAPÍTULO 06 MEDICINA DEL TRABAJO

06.01 **ud RECONOCIMIENTO MÉDICO BÁSICO**

Reconocimiento médico básico anual trabajador, compuesto por control visión, audiometría y analítica de sangre y orina con 6 parámetros.

15,00

06.02 **ud COSTO MENSUAL DE CONSERVACIÓN**

Costo mensual de conservación de instalaciones provisionales de obra, considerando 2 horas a la semana un oficial de 2ª.

9,00

06.03 **ud COSTO MENSUAL LIMPIEZA Y DESINF.**

Costo mensual de limpieza y desinfección de casetas de obra, considerando dos horas a la semana un peón ordinario.

9,00

06.04 **ud BOTIQUÍN DE URGENCIA**

Botiquín de urgencia para obra fabricado en chapa de acero, pintado al horno con tratamiento anticorrosivo y seigrafía de cruz. Color blanco, con contenidos mínimos obligatorios, colocado.

2,00

06.05 **ud REPOSICIÓN BOTIQUÍN**

Reposición de material de botiquín de urgencia.

2,00

06.06 **Ud CAMILLA PORTATIL EVACUACIONES**

Ud. Camilla portátil para evacuaciones, colocada. (20 usos)

3,00

2. CUADRO DE PRECIOS Nº 1

CÓDIGO	UD	RESUMEN	PRECIO
CAPÍTULO 01 PROTECCIONES INDIVIDUALES			
01.01	ud	**CASCO DE SEGURIDAD**	1,92
		Casco de seguridad con arnés de adaptación. Certificado CE. s/R.D. 773/97 y R.D. 1407/92. UN EUROS con NOVENTA Y DOS CÉNTIMOS	
01.02	ud	**MONO DE TRABAJO POLIESTER-ALGODÓN**	14,02
		Mono de trabajo de una pieza de poliéster-algodón. Certificado CE. s/R.D. 773/97 y R.D. 1407/92. CATORCE EUROS con DOS CÉNTIMOS	
01.03	ud	**TRAJE AGUA VERDE INGENIERO**	16,36
		Traje de agua color verde tipo ingeniero (amortizable en un uso). Certificado CE. s/R.D. 773/97 y R.D. 1407/92. DIECISEIS EUROS con TREINTA Y SEIS CÉNTIMOS	
01.04	ud	**PAR DE BOTAS DE SEGURIDAD**	8,72
		Par de botas de seguridad con plantilla y puntera de acero. Certificado CE. s/R.D. 773/97 y R.D. 1407/92. OCHO EUROS con SETENTA Y DOS CÉNTIMOS	
01.05	ud	**CINTURÓN PORTA-HERRAMIENTAS**	5,10
		Cinturón portaherramientas. Certificado CE. s/R.D. 773/97 y R.D. 1407/92. CINCO EUROS con DIEZ CÉNTIMOS	
01.06	ud	**SEMI MASCAR. ANTIPOLVO 2 FILTROS**	12,10
		Semi-mascarilla antipolvo doble filtro. Certificado CE. s/R.D. 773/97 y R.D. 1407/92. DOCE EUROS con DIEZ CÉNTIMOS	
01.07	ud	**JUEGO TAPONES ANTIRUIDO SILIC.**	0,44
		Juego de tapones antiruído de silicona ajustables. Certificado CE. s/R.D. 773/97 y R.D. 1407/92. CERO EUROS con CUARENTA Y CUATRO CÉNTIMOS	
01.08	ud	**PAR GUANTES DE LONA**	1,96
		Par guantes de lona protección estándar. Certificado CE. s/R.D. 773/97 y R.D. 1407/92. UN EUROS con NOVENTA Y SEIS CÉNTIMOS	
01.09	ud	**PAR GUANTES DE LÁTEX-ANTIC.**	1,15
		Par guantes de goma látex-anticorte. Certificado CE. s/R.D. 773/97 y R.D. 1407/92. UN EUROS con QUINCE CÉNTIMOS	
01.10	ud	**FAJA DE PROTECCIÓN LUMBAR**	5,33
		Faja protección lumbar. Certificado CE EN385. s/R.D. 773/97 y R.D. 1407/92. CINCO EUROS con TREINTA Y TRES CÉNTIMOS	
01.11	ud	**PANTALLA CONTRA PARTÍCULAS**	1,01
		Pantalla para protección contra partículas, con sujeción en cabeza. Certificado CE. s/R.D. 773/97 y R.D. 1407/92. UN EUROS con UN CÉNTIMOS	
01.12	ud	**GAFAS CONTRA IMPACTOS**	2,62
		Gafas protectoras contra impactos, incoloras. Certificado CE. s/R.D. 773/97 y R.D. 1407/92. DOS EUROS con SESENTA Y DOS CÉNTIMOS	
01.13	ud	**CHALECO SALVAVIDAS**	16,36
		Chaleco salvavidas ergonómico (amortizable en un uso). Certificado CE. s/R.D. 773/97 y R.D. 1407/92. DIECISEIS EUROS con TREINTA Y SEIS CÉNTIMOS	
01.14	ud	**PANTALLA SEGURIDAD SOLDADOR**	2,31
		Pantalla manual de seguridad para soldador, con fijación en cabeza. Certificado CE. s/R.D. 773/97 y R.D. 1407/92. DOS EUROS con TREINTA Y UN CÉNTIMOS	
01.15	ud	**MANDIL CUERO PARA SOLDADOR**	3,48
		Mandil de cuero para soldador. Certificado CE. s/R.D. 773/97 y R.D. 1407/92. TRES EUROS con CUARENTA Y OCHO CÉNTIMOS	
01.16	ud	**PAR DE POLAINAS SOLDADURA**	2,04
		Par de polainas para soldador. Certificado CE. s/R.D. 773/97 y R.D. 1407/92. DOS EUROS con CUATRO CÉNTIMOS	

CÓDIGO	UD	RESUMEN	PRECIO
CAPÍTULO 02 PROTECCIONES COLECTIVAS			
02.01	mes	**ALQUILER CONTENEDOR ESCOMBRO**	47,52
		Mes de alquiler de contenedor para depositar escombro situado en la vía pública. CUARENTA Y SIETE EUROS con CINCUENTA Y DOS CÉNTIMOS	
02.02	m2	**MONTAJE ANDAMIO METALICO**	14,89
		Alquiler, montaje y desmontaje de andamio metálico de perfil europeo, formado por montantes, y arriostramientos de acero, incluso plataformas de trabajo de chapa, así como módulo con escalera, con zócalo y antepecho de protección contra caídas, con plataforma cerrada a nivel de planta baja y red perimetral para recogida de cascotes, incluso p.p. de arriostramientos a fachadas o muro de hormigón, y p.p. de medios auxiliares y trabajos previos de limpieza para apoyos. Según normativa CE y R.D. 2177/2004. CATORCE EUROS con OCHENTA Y NUEVE CÉNTIMOS	
02.03	m	**VALLA FIJA GALVANIZADA**	15,41
		Vallado fijo de 2,00 m. de altura realizado con malla simple torsión galvanizada y postes de tubo de acero galvanizado i, p.p. de postes de esquina, jabalcones, tornapuntas, tensores, grupillas y accesorios, montada i/replanteo y recibido de postes con hormigón y posterior retirada al finalizar la obra. QUINCE EUROS con CUARENTA Y UN CÉNTIMOS	
02.04	m	**BARANDILLA TUBO**	7,22
		Barandilla de protección: excavaciones, laterales del tablero y huecos s/ R.D. 486/97. SIETE EUROS con VEINTIDOS CÉNTIMOS	
02.05	Ml	**CINTA DE BALIZAMIENTO R/B**	1,86
		Ml. Cinta corrida de balizamiento plástica pintada a dos colores roja y blanca, incluso colocación y desmontado. UN EUROS con OCHENTA Y SEIS CÉNTIMOS	
02.06	ud	**PICTOGRAMAS**	41,51
		Pictogramas colocados a lo largo del vallado perimetral (rogamos disculpen las molestias, peligro, desprendimientos, prohibido el paso a toda persona ajena a la obra). CUARENTA Y UN EUROS con CINCUENTA Y UN CÉNTIMOS	

02.07	ud	**PALETA MANUAL 2 CARAS STOP-OBL.**	**11,72**

Señal de seguridad manual a dos caras: Stop-Dirección obligatoria, tipo paleta. s/R.D. 485/97.
ONCE EUROS con SETENTA Y DOS CÉNTIMOS

02.08	m	**MALLA POLIETILENO**	**0,98**

Malla de polietileno alta densidad con tratamiento antiultravioleta, color naranja de 1 m. de altura, tipo stopper, i/colocación desmontaje, amortizado tres usos s/ R.D. 486/97.
CERO EUROS con NOVENTA Y OCHO CÉNTIMOS

02.09	ud	**SEÑAL NORMALIZADA TRAFICO**	**16,59**

Señal normalizada de tráfico con soporte metálico incluso colocación.
DIECISEIS EUROS con CINCUENTA Y NUEVE CÉNTIMOS

CÓDIGO	UD	RESUMEN	PRECIO

CAPÍTULO 03 INSTALACIONES HIGIENE Y BIENESTAR

03.01	mes	**ALQUILER CASETA OFIC.+VEST.**	**152,85**

Mes de alquiler (min. 05 meses) de caseta prefabricada para un despacho de oficina, vestuarios y un aseo con inodoro y lavabo. Estructura y cerramiento de chapa galvanizada pintada, aislamiento de poliestireno expandido autoextinguible, interior con tablero melaminado en color. Cubierta en arco de chapa galvanizada ondulada reforzada con perfil de acero; fibra de vidrio de 60 mm., interior con tablex lacado. Suelo de aglomerado revestido con PVC continuo de 2 mm., y poliestireno de 50 mm. con apoyo en base de chapa galvanizada de sección trapezoidal. Puerta de 0,8x2 m., de chapa galvanizada de 1 mm., reforzada y con poliestireno de 20 mm., picaporte y cerradura. Ventana aluminio anodizado corredera, contraventana de acero galvanizado. Instalación eléctrica 220 V., toma de tierra, automático, 2 fluorescentes de 40 W., enchufes para 1500 W. y punto luz exterior de 60 W. Con transporte a 150 km.(ida y vuelta). Entrega y recogida del módulo con camión grúa. Según R.D. 486/97.
CIENTO CINCUENTA Y DOS EUROS con OCHENTA Y CINCO CÉNTIMOS

CÓDIGO	UD	RESUMEN	PRECIO

CAPÍTULO 04 INSTALACIONES PROVISIONALES

04.01	Ud	**INSTALACIONES PROVISIONALES**	**1.500,00**

Precio de ejecución de todas las instalaciones provisionales necesarias para la correcta ejecución de la obra. Dentro de estas instalaciones provisionales se encuentran la acometida electrica, la acometida de fontaneria, la acometida de saneamiento, la acometida de telefono, además de toma de tierra y cuadro general y secundario de obra.
MIL QUINIENTOS EUROS

CÓDIGO	UD	RESUMEN	PRECIO

CAPÍTULO 05 PROTECCION CONTRAINCENDIOS

05.01	ud	**EXTINTOR CO2**	**90,32**

Extintor de CO2 de 2 Kg, en oficinas de obra.
NOVENTA EUROS con TREINTA Y DOS CÉNTIMOS

05.02	ud	**EXTINTOR POLIVALENTE**	**47,73**

Extintor polivalente de 3.5 Kg situados en instalaciones de personal,
CUARENTA Y SIETE EUROS con SETENTA Y TRES CÉNTIMOS

CÓDIGO	UD	RESUMEN	PRECIO

CAPÍTULO 06 MEDICINA DEL TRABAJO

06.01	ud	**RECONOCIMIENTO MÉDICO BÁSICO**	**84,41**

Reconocimiento médico básico anual trabajador, compuesto por control visión, audiometría y analítica de sangre y orina con 6 parámetros.
OCHENTA Y CUATRO EUROS con CUARENTA Y UN CÉNTIMOS

06.02	ud	**COSTO MENSUAL DE CONSERVACIÓN**	**70,67**

Costo mensual de conservación de instalaciones provisionales de obra, considerando 2 horas a la semana un oficial de 2ª.
SETENTA EUROS con SESENTA Y SIETE CÉNTIMOS

06.03	ud	**COSTO MENSUAL LIMPIEZA Y DESINF.**	**77,92**

Costo mensual de limpieza y desinfección de casetas de obra, considerando dos horas a la semana un peón ordinario.
SETENTA Y SIETE EUROS con NOVENTA Y DOS CÉNTIMOS

06.04	ud	**BOTIQUÍN DE URGENCIA**	**108,29**

Botiquín de urgencia para obra fabricado en chapa de acero, pintado al horno con tratamiento anticorrosivo y seigrafía de cruz. Color blanco, con contenidos mínimos obligatorios, colocado.
CIENTO OCHO EUROS con VEINTINUEVE CÉNTIMOS

06.05	ud	**REPOSICIÓN BOTIQUÍN**	**60,27**

Reposición de material de botiquín de urgencia.
SESENTA EUROS con VEINTISIETE CÉNTIMOS

06.06	Ud	**CAMILLA PORTATIL EVACUACIONES**	**6,98**

Ud. Camilla portátil para evacuaciones, colocada. (20 usos)
SEIS EUROS con NOVENTA Y OCHO CÉNTIMOS

3. CUADRO DE PRECIOS Nº 2

CÓDIGO	UD	RESUMEN	PRECIO
CAPÍTULO 01 PROTECCIONES INDIVIDUALES			
01.01	ud	**CASCO DE SEGURIDAD**	
		Casco de seguridad con arnés de adaptación. Certificado CE. s/R.D. 773/97 y R.D. 1407/92.	
		Resto de obra y materiales	1,92
		TOTAL PARTIDA	**1,92**
01.02	ud	**MONO DE TRABAJO POLIESTER-ALGODÓN**	
		Mono de trabajo de una pieza de poliéster-algodón. Certificado CE. s/R.D. 773/97 y R.D. 1407/92.	
		Resto de obra y materiales	14,02
		TOTAL PARTIDA	**14,02**
01.03	ud	**TRAJE AGUA VERDE INGENIERO**	
		Traje de agua color verde tipo ingeniero (amortizable en un uso). Certificado CE. s/R.D. 773/97 y R.D. 1407/92.	
		Resto de obra y materiales	16,36
		TOTAL PARTIDA	**16,36**
01.04	ud	**PAR DE BOTAS DE SEGURIDAD**	
		Par de botas de seguridad con plantilla y puntera de acero. Certificado CE. s/R.D. 773/97 y R.D. 1407/92.	
		Resto de obra y materiales	8,72
		TOTAL PARTIDA	**8,72**
01.05	ud	**CINTURÓN PORTA-HERRAMIENTAS**	
		Cinturón portaherramientas. Certificado CE. s/R.D. 773/97 y R.D. 1407/92.	
		Resto de obra y materiales	5,10
		TOTAL PARTIDA	**5,10**
01.06	ud	**SEMI MASCAR. ANTIPOLVO 2 FILTROS**	
		Semi-mascarilla antipolvo doble filtro. Certificado CE. s/R.D. 773/97 y R.D. 1407/92.	
		Resto de obra y materiales	12,10
		TOTAL PARTIDA	**12,10**
01.07	ud	**JUEGO TAPONES ANTIRUIDO SILIC.**	
		Juego de tapones antiruído de silicona ajustables. Certificado CE. s/R.D. 773/97 y R.D. 1407/92.	
		Resto de obra y materiales	0,44
		TOTAL PARTIDA	**0,44**
01.08	ud	**PAR GUANTES DE LONA**	
		Par guantes de lona protección estándar. Certificado CE. s/R.D. 773/97 y R.D. 1407/92.	
		Resto de obra y materiales	1,96
		TOTAL PARTIDA	**1,96**
01.09	ud	**PAR GUANTES DE LÁTEX-ANTIC.**	
		Par guantes de goma látex-anticorte. Certificado CE. s/R.D. 773/97 y R.D. 1407/92.	
		Resto de obra y materiales	1,15
		TOTAL PARTIDA	**1,15**
01.10	ud	**FAJA DE PROTECCIÓN LUMBAR**	
		Faja protección lumbar. Certificado CE EN385. s/R.D. 773/97 y R.D. 1407/92.	
		Resto de obra y materiales	5,33
		TOTAL PARTIDA	**5,33**
01.11	ud	**PANTALLA CONTRA PARTÍCULAS**	
		Pantalla para protección contra partículas, con sujeción en cabeza. Certificado CE. s/R.D. 773/97 y R.D. 1407/92.	
		Resto de obra y materiales	1,01
		TOTAL PARTIDA	**1,01**
01.12	ud	**GAFAS CONTRA IMPACTOS**	
		Gafas protectoras contra impactos, incoloras. Certificado CE. s/R.D. 773/97 y R.D. 1407/92.	
		Resto de obra y materiales	2,62
		TOTAL PARTIDA	**2,62**
01.13	ud	**CHALECO SALVAVIDAS**	
		Chaleco salvavidas ergonómico (amortizable en un uso). Certificado CE. s/R.D. 773/97 y R.D. 1407/92.	
		Resto de obra y materiales	16,36
		TOTAL PARTIDA	**16,36**
01.14	ud	**PANTALLA SEGURIDAD SOLDADOR**	
		Pantalla manual de seguridad para soldador, con fijación en cabeza. Certificado CE. s/R.D. 773/97 y R.D. 1407/92.	
		Resto de obra y materiales	2,31
		TOTAL PARTIDA	**2,31**
01.15	ud	**MANDIL CUERO PARA SOLDADOR**	
		Mandil de cuero para soldador. Certificado CE. s/R.D. 773/97 y R.D. 1407/92.	
		Resto de obra y materiales	3,48
		TOTAL PARTIDA	**3,48**
01.16	ud	**PAR DE POLAINAS SOLDADURA**	
		Par de polainas para soldador. Certificado CE. s/R.D. 773/97 y R.D. 1407/92.	
		Resto de obra y materiales	2,04
		TOTAL PARTIDA	**2,04**

CÓDIGO	UD	RESUMEN	PRECIO
CAPÍTULO 02 PROTECCIONES COLECTIVAS			
02.01	mes	**ALQUILER CONTENEDOR ESCOMBRO**	
		Mes de alquiler de contenedor para depositar escombro situado en la vía pública.	
		Resto de obra y materiales	47,52
		TOTAL PARTIDA	**47,52**

02.02 **m2** **MONTAJE ANDAMIO METALICO**

Alquiler, montaje y desmontaje de andamio metálico de perfil europeo, formado por montantes, y arriostramientos de acero, incluso plataformas de trabajo de chapa, así como módulo con escalera, con zócalo y antepecho de protección contra caídas, con plataforma cerrada a nivel de planta baja y red perimetral para recogida de cascotes, incluso p.p. de arriostramientos a fachadas o muro de hormigón, y p.p. de medios auxiliares y trabajos previos de limpieza para apoyos. Según normativa CE y R.D. 2177/2004.

Mano de obra	3,98
Resto de obra y materiales	10,91
TOTAL PARTIDA	**14,89**

02.03 **m** **VALLA FIJA GALVANIZADA**

Vallado fijo de 2,00 m. de altura realizado con malla simple torsión galvanizada y postes de tubo de acero galvanizado i, p.p. de postes de esquina, jabalcones, tornapuntas, tensores, grupillas y accesorios, montada i/replanteo y recibido de postes con hormigón y posterior retirada al finalizar la obra.

Mano de obra	3,14
Resto de obra y materiales	12,27
TOTAL PARTIDA	**15,41**

02.04 **m** **BARANDILLA TUBO**

Barandilla de protección: excavaciones, laterales del tablero y huecos s/ R.D. 486/97.

Mano de obra	4,77
Resto de obra y materiales	2,45
TOTAL PARTIDA	**7,22**

02.05 **Ml** **CINTA DE BALIZAMIENTO R/B**

Ml. Cinta corrida de balizamiento plástica pintada a dos colores roja y blanca, incluso colocación y desmontado.

Mano de obra	1,44
Resto de obra y materiales	0,42
TOTAL PARTIDA	**1,86**

02.06 **ud** **PICTOGRAMAS**

Pictogramas colocados a lo largo del vallado perimetral (rogamos disculpen las molestias, peligro, desprendimientos, prohibido el paso a toda persona ajena a la obra).

Resto de obra y materiales	41,51
TOTAL PARTIDA	**41,51**

02.07 **ud** **PALETA MANUAL 2 CARAS STOP-OBL.**

Señal de seguridad manual a dos caras: Stop-Dirección obligatoria, tipo paleta. s/R.D. 485/97.

Resto de obra y materiales	11,72
TOTAL PARTIDA	**11,72**

02.08 **m** **MALLA POLIETILENO**

Malla de polietileno alta densidad con tratamiento antiultravioleta, color naranja de 1 m. de altura, tipo stopper, i/colocación desmontaje, amortizado tres usos s/ R.D. 486/97.

Mano de obra	0,78
Resto de obra y materiales	0,20
TOTAL PARTIDA	**0,98**

02.09 **ud** **SEÑAL NORMALIZADA TRAFICO**

Señal normalizada de tráfico con soporte metálico incluso colocación.

Resto de obra y materiales	16,59
TOTAL PARTIDA	**16,59**

CÓDIGO	UD	RESUMEN	PRECIO

CAPÍTULO 03 INSTALACIONES HIGIENE Y BIENESTAR

03.01 **mes** **ALQUILER CASETA OFIC.+VEST.**

Mes de alquiler (min. 05 meses) de caseta prefabricada para un despacho de oficina, vestuarios y un aseo con inodoro y lavabo. Estructura y cerramiento de chapa galvanizada pintada, aislamiento de poliestireno expandido autoextinguible, interior con tablero melaminado en color. Cubierta en arco de chapa galvanizada ondulada reforzada con perfil de acero; fibra de vidrio de 60 mm., interior con tablex lacado. Suelo de aglomerado revestido con PVC continuo de 2 mm., y poliestireno de 50 mm. con apoyo en base de chapa galvanizada de sección trapezoidal. Puerta de 0,8x2 m., de chapa galvanizada de 1 mm., reforzada y con poliestireno de 20 mm., picaporte y cerradura. Ventana aluminio anodizado corredera, contraventana de acero galvanizado. Instalación eléctrica 220 V., toma de tierra, automático, 2 fluorescentes de 40 W., enchufes para 1500 W. y punto luz exterior de 60 W. Con transporte a 150 km.(ida y vuelta). Entrega y recogida del módulo con camión grúa. Según R.D. 486/97.

Mano de obra	1,56
Resto de obra y materiales	151,29
TOTAL PARTIDA	**152,85**

CAPÍTULO 04 INSTALACIONES PROVISIONALES

04.01 **Ud** **INSTALACIONES PROVISIONALES**

Precio de ejecución de todas las instalaciones provisionales necesarias para la correcta ejecución de la obra. Dentro de estas instalaciones provisionales se encuentran la acometida electrica, la acometida de fontaneria, la acometida de saneamiento, la acometida de telefono, además de toma de tierra y cuadro general y secundario de obra.

TOTAL PARTIDA	**1.500,00**

CÓDIGO	UD	RESUMEN	PRECIO

CAPÍTULO 05 PROTECCION CONTRAINCENDIOS

05.01 **ud** **EXTINTOR CO2**

Extintor de CO2 de 2 Kg, en oficinas de obra.

Resto de obra y materiales	90,32
TOTAL PARTIDA	**90,32**

05.02 **ud** **EXTINTOR POLIVALENTE**

Extintor polivalente de 3.5 Kg situados en instalaciones de personal,

Resto de obra y materiales	47,73
TOTAL PARTIDA	**47,73**

CÓDIGO	UD	RESUMEN	PRECIO

CAPÍTULO S06 MEDICINA DEL TRABAJO

06.01 **ud** **RECONOCIMIENTO MÉDICO BÁSICO**

Reconocimiento médico básico anual trabajador, compuesto por control visión, audiometría y analítica de sangre y orina con 6 parámetros.

Resto de obra y materiales	84,41
TOTAL PARTIDA	**84,41**

06.02 **ud** **COSTO MENSUAL DE CONSERVACIÓN**

Costo mensual de conservación de instalaciones provisionales de obra, considerando 2 horas a la semana un oficial de 2ª.

Resto de obra y materiales	70,67
TOTAL PARTIDA.....	**70,67**

06.03 **ud** **COSTO MENSUAL LIMPIEZA Y DESINF.**

Costo mensual de limpieza y desinfección de casetas de obra, considerando dos horas a la semana un peón ordinario.

Resto de obra y materiales	77,92
TOTAL PARTIDA.....	**77,92**

06.04 **ud** **BOTIQUÍN DE URGENCIA**

Botiquín de urgencia para obra fabricado en chapa de acero, pintado al horno con tratamiento anticorrosivo y seigrafía de cruz. Color blanco, con contenidos mínimos obligatorios, colocado.

Mano de obra	2,34
Resto de obra y materiales	105,95
TOTAL PARTIDA.....	**108,29**

06.05 **ud** **REPOSICIÓN BOTIQUÍN**

Reposición de material de botiquín de urgencia.

Resto de obra y materiales	60,27
TOTAL PARTIDA.....	**60,27**

06.06 **Ud** **CAMILLA PORTATIL EVACUACIONES**

Ud. Camilla portátil para evacuaciones, colocada. (20 usos)

Resto de obra y materiales	6,98
TOTAL PARTIDA.....	**6,98**

4. PRESUPUESTO

CÓDIGO	RESUMEN	CANTIDAD	PRECIO	IMPORTE
	CAPÍTULO 01 PROTECCIONES INDIVIDUALES			
01.01	**ud CASCO DE SEGURIDAD** Casco de seguridad con arnés de adaptación. Certificado CE. s/R.D. 773/97 y R.D. 1407/92.	20,00	1,92	38,40
01.02	**ud MONO DE TRABAJO POLIESTER-ALGODÓN** Mono de trabajo de una pieza de poliéster-algodón. Certificado CE. s/R.D. 773/97 y R.D. 1407/92.	20,00	14,02	280,40
01.03	**ud TRAJE AGUA VERDE INGENIERO** Traje de agua color verde tipo ingeniero (amortizable en un uso). Certificado CE. s/R.D. 773/97 y R.D. 1407/92.	20,00	16,36	327,20
01.04	**ud PAR DE BOTAS DE SEGURIDAD** Par de botas de seguridad con plantilla y puntera de acero. Certificado CE. s/R.D. 773/97 y R.D. 1407/92.	20,00	8,72	174,40
01.05	**ud CINTURÓN PORTA-HERRAMIENTAS** Cinturón portaherramientas. Certificado CE. s/R.D. 773/97 y R.D. 1407/92.	8,00	5,10	40,80
01.06	**ud SEMI MASCAR. ANTIPOLVO 2 FILTROS** Semi-mascarilla antipolvo doble filtro. Certificado CE. s/R.D. 773/97 y R.D. 1407/92.	20,00	12,10	242,00
01.07	**ud JUEGO TAPONES ANTIRUIDO SILIC.** Juego de tapones antiruído de silicona ajustables. Certificado CE. s/R.D. 773/97 y R.D. 1407/92.	20,00	0,44	8,80
01.08	**ud PAR GUANTES DE LONA** Par guantes de lona protección estándar. Certificado CE. s/R.D. 773/97 y R.D. 1407/92.	20,00	1,96	39,20
01.09	**ud PAR GUANTES DE LÁTEX-ANTIC.** Par guantes de goma látex-anticorte. Certificado CE. s/R.D. 773/97 y R.D. 1407/92.	20,00	1,15	23,00
01.10	**ud FAJA DE PROTECCIÓN LUMBAR** Faja protección lumbar. Certificado CE EN385. s/R.D. 773/97 y R.D. 1407/92.	20,00	5,33	106,60
01.11	**ud PANTALLA CONTRA PARTÍCULAS** Pantalla para protección contra partículas, con sujeción en cabeza. Certificado CE. s/R.D. 773/97 y R.D. 1407/92.	4,00	1,01	4,04
01.12	**ud GAFAS CONTRA IMPACTOS** Gafas protectoras contra impactos, incoloras. Certificado CE. s/R.D. 773/97 y R.D. 1407/92.	4,00	2,62	10,48
01.13	**ud CHALECO SALVAVIDAS** Chaleco salvavidas ergonómico (amortizable en un uso). Certificado CE. s/R.D. 773/97 y R.D. 1407/92.	3,00	16,36	49,08
01.14	**ud PANTALLA SEGURIDAD SOLDADOR** Pantalla manual de seguridad para soldador, con fijación en cabeza. Certificado CE. s/R.D. 773/97 y R.D. 1407/92.	4,00	2,31	9,24
01.15	**ud MANDIL CUERO PARA SOLDADOR** Mandil de cuero para soldador. Certificado CE. s/R.D. 773/97 y R.D. 1407/92.	4,00	3,48	13,92
01.16	**ud PAR DE POLAINAS SOLDADURA** Par de polainas para soldador. Certificado CE. s/R.D. 773/97 y R.D. 1407/92.	4,00	2,04	8,16
	TOTAL CAPÍTULO 01 PROTECCIONES INDIVIDUALES			**1.375,72**

CÓDIGO	RESUMEN	CANTIDAD	PRECIO	IMPORTE
	CAPÍTULO 02 PROTECCIONES COLECTIVAS			
02.01	**mes ALQUILER CONTENEDOR ESCOMBRO** Mes de alquiler de contenedor para depositar escombro situado en la vía pública.	9,00	47,52	427,68
02.02	**m2 MONTAJE ANDAMIO METALICO** Alquiler, montaje y desmontaje de andamio metálico de perfil europeo, formado por montantes, y arriostramientos de acero, incluso plataformas de trabajo de chapa, así como módulo con escalera, con zócalo y antepecho de protección contra caídas, con plataforma cerrada a nivel de planta baja y red perimetral para recogida de cascotes, incluso p.p. de arriostramientos a fachadas o muro de hormigón, y p.p. de medios auxiliares y trabajos previos de limpieza para apoyos. Según normativa CE y R.D. 2177/2004.	100,00	14,89	1.489,00

02.03	m	**VALLA FIJA GALVANIZADA**			
		Vallado fijo de 2,00 m. de altura realizado con malla simple torsión galvanizada y postes de tubo de acero galvanizado i, p.p. de postes de esquina, jabalcones, tornapuntas, tensores, grupillas y accesorios, montada i/replanteo y recibido de postes con hormigón y posterior retirada al finalizar la obra.			
			50,00	15,41	770,50
02.04	m	**BARANDILLA TUBO**			
		Barandilla de protección: excavaciones, laterales del tablero y huecos s/ R.D. 486/97.			
			200,00	7,22	1.444,00
02.05	Ml	**CINTA DE BALIZAMIENTO R/B**			
		Ml. Cinta corrida de balizamiento plástica pintada a dos colores roja y blanca, incluso colocación y desmontado.			
			200,00	1,86	372,00
02.06	ud	**PICTOGRAMAS**			
		Pictogramas colocados a lo largo del vallado perimetral (rogamos disculpen las molestias, peligro, desprendimientos, prohibido el paso a toda persona ajena a la obra).			
			2,00	41,51	83,02
02.07	ud	**PALETA MANUAL 2 CARAS STOP-OBL.**			
		Señal de seguridad manual a dos caras: Stop-Dirección obligatoria, tipo paleta. s/R.D. 485/97.			
			2,00	11,72	23,44
02.08	m	**MALLA POLIETILENO**			
		Malla de polietileno alta densidad con tratamiento antiultravioleta, color naranja de 1 m. de altura, tipo stopper, i/colocación desmontaje, amortizado tres usos s/ R.D. 486/97.			
			200,00	0,98	196,00
02.09	ud	**SEÑAL NORMALIZADA TRAFICO**			
		Señal normalizada de tráfico con soporte metálico incluso colocación.			
			4,00	16,59	66,36

TOTAL CAPÍTULO 02 PROTECCIONES COLECTIVAS 4.872,00

CÓDIGO	RESUMEN	CANTIDAD	PRECIO	IMPORTE
	CAPÍTULO 03 INSTALACIONES HIGIENE Y BIENESTAR			
03.01	**mes ALQUILER CASETA OFIC.+VEST.**			
	Mes de alquiler (min. 05 meses) de caseta prefabricada para un despacho de oficina, vestuarios y un aseo con inodoro y lavabo. Estructura y cerramiento de chapa galvanizada pintada, aislamiento de poliestireno expandido autoextinguible, interior con tablero melaminado en color. Cubierta en arco de chapa galvanizada ondulada reforzada con perfil de acero; fibra de vidrio de 60 mm., interior con tablex lacado. Suelo de aglomerado revestido con PVC continuo de 2 mm., y poliestireno de 50 mm. con apoyo en base de chapa galvanizada de sección trapezoidal. Puerta de 0,8x2 m., de chapa galvanizada de 1 mm., reforzada y con poliestireno de 20 mm., picaporte y cerradura. Ventana aluminio anodizado corredera, contraventana de acero galvanizado. Instalación eléctrica 220 V., toma de tierra, automático, 2 fluorescentes de 40 W., enchufes para 1500 W. y punto luz exterior de 60 W. Con transporte a 150 km.(ida y vuelta). Entrega y recogida del módulo con camión grúa. Según R.D. 486/97.			
		9,00	152,85	1.375,65

TOTAL CAPÍTULO 03 INSTALACIONES HIGIENE Y BIENESTAR 1.375,65

CÓDIGO	RESUMEN	CANTIDAD	PRECIO	IMPORTE
	CAPÍTULO 04 INSTALACIONES PROVISIONALES			
04.01	**Ud INSTALACIONES PROVISIONALES**			
	Precio de ejecución de todas las instalaciones provisionales necesarias para la correcta ejecución de la obra. Dentro de estas instalaciones provisionales se encuentran la acometida electrica, la acometida de fontaneria, la acometida de saneamiento, la acometida de telefono, además de toma de tierra y cuadro general y secundario de obra.			
		1,00	1.500,00	1.500,00

TOTAL CAPÍTULO 04 INSTALACIONES PROVISIONALES 1.500,00

CÓDIGO	RESUMEN	CANTIDAD	PRECIO	IMPORTE
	CAPÍTULO 05 PROTECCION CONTRAINCENDIOS			
05.01	**ud EXTINTOR CO2**			
	Extintor de CO2 de 2 Kg, en oficinas de obra.			
		3,00	90,32	270,96
05.02	**ud EXTINTOR POLIVALENTE**			
	Extintor polivalente de 3.5 Kg situados en instalaciones de personal,			
		3,00	47,73	143,19

TOTAL CAPÍTULO 05 PROTECCION CONTRAINCENDIOS 414,15

CÓDIGO	RESUMEN	CANTIDAD	PRECIO	IMPORTE
	CAPÍTULO 06 MEDICINA DEL TRABAJO			
06.01	**ud RECONOCIMIENTO MÉDICO BÁSICO**			
	Reconocimiento médico básico anual trabajador, compuesto por control visión, audiometría y analítica de sangre y orina con 6 parámetros.			
		15,00	84,41	1.266,15
06.02	**ud COSTO MENSUAL DE CONSERVACIÓN**			
	Costo mensual de conservación de instalaciones provisionales de obra, considerando 2 horas a la semana un oficial de 2ª.			
		9,00	70,67	636,03
06.03	**ud COSTO MENSUAL LIMPIEZA Y DESINF.**			
	Costo mensual de limpieza y desinfección de casetas de obra, considerando dos horas a la semana un peón ordinario.			
		9,00	77,92	701,28
06.04	**ud BOTIQUÍN DE URGENCIA**			
	Botiquín de urgencia para obra fabricado en chapa de acero, pintado al horno con tratamiento anticorrosivo y seigrafía de cruz. Color blanco, con contenidos mínimos obligatorios, colocado.			
		2,00	108,29	216,58
06.05	**ud REPOSICIÓN BOTIQUÍN**			
	Reposición de material de botiquín de urgencia.			
		2,00	60,27	120,54
06.06	**Ud CAMILLA PORTATIL EVACUACIONES**			
	Ud. Camilla portátil para evacuaciones, colocada. (20 usos)			
		3,00	6,98	20,94
	TOTAL CAPÍTULO 06 MEDICINA DEL TRABAJO			**2.961,52**

5. RESUMEN DE PRESUPUESTO

CAPITULO	RESUMEN	EUROS	%
1	PROTECCIONES INDIVIDUALES.....	1.375,72	11,01
2	PROTECCIONES COLECTIVAS	4.872,00	38,98
3	INSTALACIONES HIGIENE Y BIENESTAR	1.375,65	11,01
4	INSTALACIONES PROVISIONALES.....	1.500,00	12,00
5	PROTECCION CONTRAINCENDIOS	414,15	3,31
6	MEDICINA DEL TRABAJO	2.961,52	23,69
	TOTAL EJECUCIÓN MATERIAL	**12.499,04 €**	
		374971.20 C$	
		17044.15 $	

Asciende el presupuesto base de licitación a la expresada cantidad de:

- DOCEMIL CUATROCIENTOS NOVENTA Y NUEVE EUROS CON CUATRO CÉNTIMOS.
- TRESCIENTOS SETANTA Y CUATRO MIL NOVECIENTOS SETENTA Y UN CÓRDOBAS CON VEINTE CENTAVOS.
- DIECISIETE MIIL CUARENTA Y CUATRO DÓLARES CON QUINCE CENTAVOS.

Burgos, Febrero de 2.012

AUTORES DEL PROYECTO

D. Sergio Agustín Ratón Alomar

Dña. Miriam Sacristán Terradillos

Dña. Raquel Estrada Merino

D. Alfonso Cid González

ANEJO Nº15

CONTROL DE CALIDAD

ÍNDICE

Página

1. INTRODUCCIÓN 5

2. RELACIÓN VALORADA DE ENSAYOS 6

2.1. HORMIGONES. 6
2.2. ACERO PARA ARMADURAS PASIVAS 6
2.3. EXCAVACIÓN DE LA EXPLANACIÓN 6
2.4. RELLENOS 7

3. VALORACIÓN DE LOS ENSAYOS 8

4. RESUMEN DE LA VALORACIÓN DE LOS ENSAYOS 10

1. INTRODUCCIÓN

Se desarrolla en el presente Anejo el PROGRAMA DE CONTROL DE CALIDAD Y GEOMÉTRICO de las obras que se deben realizar en el presente proyecto.

En este programa se incluye el control de calidad de materiales previstos en la obra y las medidas necesarias para hacer efectivo el control de calidad de ejecución y el control geométrico de la obra. Además, contiene las actuaciones previstas como obligatorias en las normativas, instrucciones y reglamentos de nivel nacional.

Como dato de partida, suponemos que el contratista adjudicatario de las obras, estará obligado a la ejecución de un autocontrol de cotas, tolerancias y geometría en general, así como de la calidad de los materiales, mediante ensayos de laboratorio, tales como densidades de compactación, etc.

Mediante este autocontrol se garantizará que no se presente a la Administración ninguna unidad de obra como ejecutada sin que el contratista haya hecho sus propias comprobaciones y ensayos para asegurar que el material cumple las especificaciones indicadas en el Pliego de Prescripciones.

Para ello, el Contratista dispondrá en obra de los equipos necesarios y suficientes (laboratorio con sus instalaciones y aparatos adecuados), como medios humanos capacitados para los mencionados ensayos.

La Dirección de Obra deberá dar la expresa conformidad a la empresa debidamente acreditada que el Contratista proponga para llevar a cabo el plan de control de calidad.

A continuación se da una relación valorada de los ensayos a realizar, como mínimo, para la ejecución de las obras definidas en el presente Proyecto. Dicha relación ha sido elaborada en base a la normativa ASTM.

2. RELACIÓN VALORADA DE ENSAYOS

En los precios de los ensayos que se relacionan a continuación se incluye un 6% correspondiente a los costes indirectos, es decir, se trata de precios de ejecución material.

2.1. HORMIGONES.

Se consideran hormigones fabricados en central, poseedores de Sello de Calidad oficialmente reconocido. El contratista sólo realizará ensayos en el lugar de empleo. Según se ha comentado en anteriores apartados del presente proyecto, el control del hormigón se realizará a nivel estadístico, lo que nos marcará la definición de los lotes y el número de amasadas a controlar. Los lotes serán de 100 m3, controlando en cada uno de ellos seis amasadas.

En lugar de empleo:	**Córdobas**
Hormigón; puesta en obra: Por cada 100 m3 de hormigón se realizarán los siguientes:	
Un (1) Ensayo Granulométrico (ASTM E-11), a 462.3 córdobas (50 % de los lotes)	462.3
Seis (6) Ensayos de Determinación de consistencia por el Método Cono de Abrahms (*ASTM C-143 / AASHTO T-23*) a 991.2 córdobas a probetas que se fabriquen para controlar la resistencia	5947.2
Ensayo característico del hormigón, incluyendo la realización de 4 series de 5 probetas cilíndricas de 15 X 30 cm. procedentes de seis amasadas distintas. conservación, refrentado y rotura de las probetas y emisión del informe correspondiente, según *ASTM C-469*.	11470.2

.

2.2. ACERO PARA ARMADURAS PASIVAS

El acero a emplear en la obra deberá poseer distintivo reconocido.

En lugar de empleo:	**Córdobas**
Por cada 40 t o fracción se realizarán los siguientes ensayos:	
Límite elástico convencional Carga máxima Alargamiento de rotura Sección equivalente Características geométricas Resaltos Doblado simple a 180 º Doblado/desdoblado El precio total del ensayo será de 4092.6 córdobas.	4092.6

2.3. EXCAVACIÓN DE LA EXPLANACIÓN

El objeto de este control de calidad, es el de comprobar que el terreno que aparece en los taludes, después de terminada la excavación conserva sus características naturales, y que en dichos taludes no se presentan defectos, ni se realizan operaciones que comprometan su estabilidad.

Así, se realizarán los ensayos que a continuación se enumeran:

Excavaciones en tierra :	Córdobas
Por cada dos mil quinientos metros cuadrados de zona marcada, en Proyecto (2.500 m²), con las mismas características :	
Dos (2) Equivalentes de Arena (NLT-113/58), a 450.9 córdobas	901.8
Un (1) Ensayo Proctor Modificado (NLT-108/58), a 1713 córdobas	1713

Por cada cinco mil metros cuadrados de zona marcada, en Proyecto (5.000 m²), con las mismas características :	
Un (1) Granulométrico, a 720.6 córdobas	720.6
Un (1) Determinación de los límites de Atterberg a 720.6 córdobas	720.6
Por cada lote de material de un mismo tipo excavado que aparece en 5.000 m² , o fracción diaria excavada si ésta es menor :	
Cinco (5) determinación de la densidad y humedad "in situ", por el método de isótopos radioactivos a 540.9 córdobas	**2704.5**
Por cada diez mil metros cuadrados de zona marcada, en Proyecto (10.000 m2), con las mismas características :	
Un (1) CBR de laboratorio, según NLT-111 a 2794.8 córdobas	2794.8

2.4. RELLENOS

Las materias objeto de control en esta unidad de obra serán las siguientes:

- Materiales que la constituyen.

- Extensión.

- Compactación.

- Geometría.

Se trata de comprobar que el material a utilizar cumple con todas las prescripciones establecidas en el P.P.T.P., tanto en el lugar de origen como en el lugar de empleo para evitar cualquier alteración que pudiera producirse como consecuencia de las operaciones de excavación, carga, transporte y descarga.

Así, se realizarán los ensayos que a continuación se enumeran:

En lugar de procedencia :	Córdobas
Por cada mil metros cúbicos de material (1.000 m3) se realizarán :	
Un (1) Ensayo Proctor Modificado (NLT-108/58), a 2279.1 córdobas	2279.1
Por cada cinco mil metros cúbicos de material (5.000 m3) :	
Un (1) Granulométrico, a 900 córdobas	900
Un (1) Determinación de los límites de Atterberg a 927 córdobas	927
Por cada diez mil metros cúbicos de material (10.000 m3) :	
Un (1) CBR de laboratorio, según NLT-111 a 4045.2 córdobas	4045.2
En lugar de empleo, durante su compactación :	Córdobas
Por cada cinco mil metros cúbicos (5.000 m3) de tongada :	
Cinco (5) determinación de la densidad y humedad "in situ", por el método de isótopos radioactivos a 778.2 córdobas	3891

3. VALORACIÓN DE LOS ENSAYOS

3.1. HORMIGONES

Mediciones:

Hormigón en Masa de 3000 PSI de consistencia Plástica, con un tamaño máximo de árido de 25mm.	75.15
Hormigón Armado de 4500 PSI de consistencia Plástica, con un tamaño máximo de árido de 20mm, en un ambiente C1.	3967.95

Valoración:

	Precio / Ud.	Nº Ensayos	Córdobas
En lugar de empleo			
1 Ensayo Granulométrico (NLT-150/63)	462.30	50	23115.00
6 Ensayos de Determinación de consistencia por el Método Cono de Abrahms (UNE 7103) / 100 m3	5947.20	50	297360.00
1 Ensayo característico del hormigón, incluyendo la realización de 6 series de 5 probetas cilíndricas de 15 X 30 cm. según UNE-83.301 / 100 m3 (para cada tipo de hormigón)	11467.20	50	573360.00
TOTAL		**893835.00**	

3.2. ACERO PARA ARMADURAS PASIVAS

Medición:

Material necesario	737362.01 lbs

Valoración:

	Precio / Ud.	Nº Ensayos	Córdobas
Ensayo completo/ 40 t:	4092.60	10	40926.00
TOTAL		40926.00	

3.3.- EXCAVACIÓN

Medición:

Superficie de explanación	2847.23 m^2
Longitud de explanada	132.91m

Valoración:

	Precio/Ud.	Nº Ensayos Total	Córdobas
2 Equivalentes de Arena / 2.500 m2	901.80	4	3607.20
1 Proctor Modificado / 2.500 m2	1713.00	2	3426.00
1 Granulométrico / 5.000 m2	720.60	1	720.60

1 D. Límites de Atterberg / 5.000 m2	720.60	1	720.60
5 determinación de la densidad y humedad “in situ”, por el método de isótopos radioactivos / 5.000 m2	2704.50	5	13522.50
1 CBR / 10.000 m2	2794.80	1	2794.80
		TOTAL	24791.70

3.5.- RELLENOS

Medición:

Material necesario	12569.94 m3

Valoración:

	Precio/ud	Nº	Córdobas
1 Proctor / 1.000 m3	2279.10	13	29628.30
1 Granulométrico / 5.000 m3	900.00	3	2700,00
1 D. Límites de Atterberg / 5.000 m3	927.00	3	2781.00
1 CBR / 10.000 m3	4195.20	2	8390.40
5 determinación de la densidad y humedad “in situ”, por el método de isótopos radioactivos /5000 m3	3891.00	3	11673.00
		TOTAL	55172.70

4. RESUMEN DE LA VALORACIÓN DE LOS ENSAYOS

	Córdobas
Hormigón	893835.00
Acero pasivo	40926.00
Excavación	24791.70
Rellenos	55172.70
TOTAL	**1014725.40**

La valoración de los ensayos a realizar en la admisión de materiales y de control durante la ejecución de las obras asciende a la cantidad de:

Un millón catorce mil setecientos veinticinco con cuarenta Córdobas

Ésta cantidad corresponde al 1,22% del presupuesto de ejecución material, por lo que se considera lo suficientemente significante como para incluirlo en una partida independiente dentro del presupuesto.

ANEJO Nº 16

JUSTIFICACIÓN DE PRECIOS

ÍNDICE

Página

1. INTRODUCCIÓN 5

2. VARIABLES A CONSIDERAR PARA TRASLADAR A PRECIOS DE VENTA 5

2.1. FACTOR TRANSPORTE 5
2.2. COSTOS INDIRECTOS, ADMINISTRACIÓN, IMPREVISTOS Y UTILIDAD 5
2.3. PORCENTAJE POR DESLIZAMIENTO DE LA MONEDA 6

1. INTRODUCCIÓN

El objeto del presente anejo es el de detallar la procedencia de los distintos precios empleados en el documento "Presupuesto".

Para los precios se ha empleado:

- La guía de costos del Nuevo FISE.

Para la correcta utilización de la misma hay que tener en consideración que los costos reflejados en ella se encuentran a nivel de costos directos, con referencia a la ciudad de Managua y se deben considerar como costos directos estimados.

2. VARIABLES A CONSIDERAR PARA TRASLADAR A PRECIOS DE VENTA

2.1. FACTOR TRANSPORTE

Los costos directos de los catálogos no incluyen ningún tipo de transporte, por el que se debe estimar el monto por transportar los distintos materiales y/o equipo al sitio del proyecto.

Para ello es preciso usar un factor, el cual es especifico para cada proyecto, donde se consideran las variables que intervienen en el costo de transporte, así como: distancia, tiempo, volumen a transportar y el grado de dificultad para acceder al sitio del proyecto.

A continuación se muestra la tabla con las diferentes cabeceras municipales de la Región Central Norte:

FACTORES ESTIMADOS DE TRANSPORTE A LAS CABECERAS MUNICIPALES

DEPARTAMENTO	MUNICIPIOS POR DEPARTAMENTO		CABECERA MUNICIPAL	DISTANCIA DESDE MANAGUA (Km)	GRADO DE DIFICULTAD DE ACCESO	FACTOR DE TRANSPORTE
MATAGALPA	1	San Isidro	San Isidro	118	1	1.1822
	2	Sébaco	Sébaco	103	1	1.0725
	3	Ciudad Darío	Ciudad Darío	89	1	1.0711
	4	Terrabona	Terrabona	110	2	1.2613
	5	San Dionisio	San Dionisio	122	2	1.2892
	6	Esquipulas	Esquipulas	108	1	1.1553
	7	Muy Muy	Muy Muy	132	1	1.1742
	8	Matagalpa	Matagalpa	127	1	1.1681
	9	San Ramón	San Ramón	137	1	1.1966
	10	El Tuma-La Dalia	La Dalia	168	1	1.2431
	11	Rancho Grande	Rancho Grande	203	1	1.2355
	12	Matiguás	Matiguás	156	1	1.1732
	13	Río Blanco	Río Blanco	188	1	1.1832

2.2. COSTOS INDIRECTOS, ADMINISTRACIÓN, IMPREVISTOS Y UTILIDAD

En la estimación de los precios de venta, se debe hacer el correspondiente cálculo de los costes indirectos, costos por administración, márgenes de utilidad e imprevistos a fin de determinar el factor de sobrecosto a aplicarse a los costos directos del proyecto.

Seguidamente se muestra la tabla con los factores de venta estimados por modalidad de gestión y tipo de proyecto:

MODALIDAD DE GESTIÓN	TIPO DE PROYECTO	FACTOR DE VENTA
NORMAL	Obras verticales (mayor complejidad)	1.25
	Obras verticales (menor complejidad)	1.30
	Obras horizontales (mayor complejidad)	1.23
	Obras horizontales (menor complejidad)	1.25
	Agua potable y Saneamiento rural (≤US$ 50,000)	1.30
	Agua potable y Saneamiento rural (US$ 50,001<x≤150,000)	1.27
	Agua potable y Saneamiento rural (US$ 150,001<x≤600,000)	1.25
	Letrinas	1.22
	Canchas deportivas	1.30
	Paneles solares	1.15

En el presente proyecto la modalidad de gestión es normal, y el tipo de proyecto es una obra horizontal de mayor complejidad, por lo que tomamos un factor de venta de 1.23.

2.3. PORCENTAJE POR DESLIZAMIENTO DE LA MONEDA

Es el porcentaje que hay que aplicar a los valores de los precios de la guía de costos del FISE, para conocer el valor real de las cosas en el momento de ejecución de las obras.

Éste porcentaje, va cambiando con el tiempo, debido a los cambios de valor que sufre la moneda.

El último dato que se ha conseguido, es el correspondiente a marzo de 2011, y dicho valor es del 63%, por lo que para obtener el valor real en éste momento habría que multiplicarlo por 1.63.

ANEJO Nº 17

PLAN DE OBRA

ÍNDICE

Página

1. INTRODUCCIÓN 5
2. OBJETIVOS 5
3. PLAZO TOTAL DE LOS TRABAJOS 6
4. DIAGRAMA DE BARRAS 7

1. INTRODUCCIÓN

El presente anejo desarrolla el análisis de la ejecución de los trabajos que comprende el proyecto. El desarrollo de dicho análisis es el Plan de Obra, cuyo objeto es la comprobación de la viabilidad de los trabajos y los plazos propuestos.

En el mismo, se incluye la descripción del desarrollo de los trabajos, con el estudio de los diferentes tajos y tramos en que se divide la obra, para mostrar la relación y dependencia entre los mismos, de cuyo análisis se deriva la necesidad de simultanear los trabajos o desfasar alguno de ellos.

2. OBJETIVOS

La programación de la obra se ha realizado en base a la consecución de los siguientes objetivos:

- garantizar la viabilidad de la misma desde el punto de vista técnico.
- evitar, al máximo posible, las interferencias que la ejecución de las obras imponen para el tráfico existente en la zona por la entrada y salida de camiones desde la margen del río hasta las vías existentes en el tramo.
- adelantar, dentro de lo posible, la ejecución de los tajos de mayor dificultad, con el fin de evitar retrasos en la finalización de las obras por posibles complicaciones en los mismos.
- lograr la utilización óptima de los recursos de mano de obra, maquinaria y materiales evitando en lo posible, puntas de trabajo con el objeto de lograr una alta rentabilidad económica.

Del análisis del Plan de Obra se deducen cuales son las actividades más críticas, a las cuales se deberá dedicar una mayor atención durante la ejecución de los trabajos para evitar que, debido a causas no previstas, se originen retrasos o paralizaciones en otros tajos a los cuales condicionan, lo que supondría una alteración importante tanto en los costos como en los plazos estimados.

3. PLAZO TOTAL DE LOS TRABAJOS

De acuerdo con la programación realizada, el Plan de Ejecución de las Obras del presente Proyecto prevé un plazo de DIEZ MESES (10) meses, contados desde la firma del acta de replanteo, para su completa ejecución.

Las obras propuestas se han programado considerando los equipos disponibles y los rendimientos de trabajo de Nicaragua, se han usado para ello información procedente de otros proyectos. Las obras comenzarán con la preparación del terreno colindante a la zona de actuación para los acopios de material y estacionamiento de maquinaría pesada. La siguiente fase consistirá en realizar el encauzamiento del río para así poder proceder a trabajar en la zona con mayor facilidad y con la seguridad requerida. Preparado el terreno, se realizará la sub-estructura del puente, es decir, la cimentación de todas las pilas y los estribos. La siguiente fase consiste en la ejecución de las propias pilas, arco y del tablero de hormigón armado, incluyéndose en esta fase la realización del pavimento, también de hormigón armado. Las últimas fases antes de la finalización de la obra son las obras de drenaje y la señalización (horizontal y vertical). Por último, se procederá a la demolición y retirada de los restos del antiguo puente, de las cimentaciones de las cimbras y las obras de encauzamiento del río. El control de calidad se realizará de forma periódica, y las medidas de prevención y mitigación de accidentes se aplicarán en todo el tiempo que dure la obra.

4. DIAGRAMA DE BARRAS

ACTIVIDADES		DIAGRAMA DE BARRAS VALORADO. PROYECTO DE PUENTE EN EL PASO DE BOPAL SOBRE EL RÍO GRANDE DE MATAGALPA (NICARAGUA).										% s/PE	IMPORTES
		Mes 1	Mes 2	Mes 3	Mes 4	Mes 5	Mes 6	Mes 7	Mes 8	Mes 9	Mes 10		
1.- PRELIMINARES		C$ 4.971.995,61										5,85%	C$ 4.971.995,61
2.- MOVIMIENTO DE TIERRAS (APROCHES)meter desvio rio		C$ 16.506.515,39										19,41%	C$ 16.506.515,39
3.- SUBESTRUCTURA PARA PUENTE (CIMENTACIÓN)		C$ 6.772.657,61	C$ 5.970.614,84		C$ 401.021,39	C$ 401.021,39						15,93%	C$ 13.545.315,22
3.1,- CIMENTACION PILAS,		C$ 5.970.614,84	C$ 5.970.614,84									14,04%	C$ 11.941.229,68
3.2,- ESTRIBOS		C$ 802.042,77			C$ 401.021,39	C$ 401.021,39						1,89%	C$ 1.604.085,54
4.- SUPERESTRUCTURA PARA PUENTE (PILAS, ARCO Y TABLERO)			C$ 3.773.096,12	C$ 4.714.300,96	C$ 2.831.891,28	C$ 4.514.120,66	C$ 8.078.759,73	C$ 8.078.759,73	C$ 8.078.759,73	C$ 8.078.759,73		56,62%	C$ 48.148.447,92
4,1,- PILAS			C$ 949.481,59	C$ 949.481,59	C$ 949.481,59	C$ 474.740,80						3,91%	C$ 3.323.185,58
4.2,- ARCO			C$ 2.823.614,52	C$ 3.764.819,36	C$ 1.882.409,68							9,96%	C$ 8.470.843,57
4.3,- TABLERO						C$ 4.039.379,86	C$ 8.078.759,73	C$ 8.078.759,73	C$ 8.078.759,73	C$ 8.078.759,73		42,75%	C$ 36.354.418,77
5.- SEÑALIZACIÓN HORIZONTAL Y VERTICAL										C$ 19.256,47		0,02%	C$ 19.256,47
6.- PRUEBA DE CARGA											C$ 64.506,65	0,08%	C$ 64.506,65
7.- CONTROL DE CALIDAD		C$ 101.472,54	C$ 101.472,54	C$ 101.472,54	C$ 101.472,54	C$ 101.472,54	C$ 101.472,54	C$ 101.472,54	C$ 101.472,54	C$ 101.472,54	C$ 101.472,54	1,19%	C$ 1.014.725,40
8.- MEDIDAS DE MITIGACIÓN Y PREVENCIÓN DE ACCIDENTES		C$ 37.497,12	C$ 37.497,12	C$ 37.497,12	C$ 37.497,12	C$ 37.497,12	C$ 37.497,12	C$ 37.497,12	C$ 37.497,12	C$ 37.497,12	C$ 37.497,12	0,44%	C$ 374.971,20
9.-DEMOLICIÓN											C$ 390.712,78	0,46%	C$ 390.712,78
CERTIFICACIÓN %	MENSUAL	33,39%	11,62%	5,71%	3,97%	5,94%	9,66%	9,66%	9,66%	9,69%	0,70%	100,00%	C$ 85.036.446,64
	A ORIGEN	33,39%	45,01%	50,71%	54,68%	60,62%	70,29%	79,95%	89,61%	99,30%	100,00%		
CERTIFICACIÓN PE	MENSUAL	C$ 28.390.138,27	C$ 9.882.680,62	C$ 4.853.270,62	C$ 3.371.882,32	C$ 5.054.111,71	C$ 8.217.729,39	C$ 8.217.729,39	C$ 8.217.729,39	C$ 8.236.985,86	C$ 594.189,09		
	A ORIGEN	C$ 28.390.138,27	C$ 38.272.818,89	C$ 43.126.089,51	C$ 46.497.971,83	C$ 51.552.083,53	C$ 59.769.812,92	C$ 67.987.542,31	C$ 76.205.271,69	C$ 84.442.257,55	C$ 85.036.446,64		

ANEJO Nº 18

ESTUDIO FOTOGRÁFICO

ÍNDICE

Página

1. INTRODUCCIÓN 5

2. REPORTAJE FOTOGRÁFICO 5

2.1. FOTOGRAFÍAS DEL EMPLAZAMIENTO 5
2.2. FOTOGRAFÍAS DE LAS PERFORACIONES 7
2.2.1. SONDEO Nº1 7
2.2.2. SONDEO Nº2 7
2.2.3. SONDEO Nº3 7
2.2.4. SONDEO Nº4 7
2.3. FOTOGRAFÍAS DE LOS RESTOS DEL PUENTE ANTERIOR 8
2.4. FOTOGRAFÍAS DEL PUENTE VADO 10

1. INTRODUCCIÓN

El cometido de este anejo es dar una visión de la zona donde se va a ubicar el proyecto y de la situación actual de la misma, para ello nos valemos de diversas fotografías tomadas en campo.

2. REPORTAJE FOTOGRÁFICO

2.1. FOTOGRAFÍAS DEL EMPLAZAMIENTO

Vista desde la ubicación del proyecto hacia aguas arriba.

Vista desde la ubicación del proyecto hacia aguas abajo.

Emplazamiento propuesto

Vista desde la margen derecha del rio.

2.2. FOTOGRAFÍAS DE LAS PERFORACIONES

2.2.1. SONDEO Nº1

2.2.2. SONDEO Nº2

2.2.3. SONDEO Nº3

2.2.4. SONDEO Nº4

2.3. FOTOGRAFÍAS DE LOS RESTOS DEL PUENTE ANTERIOR

Fotografía del estribo de la margen de San Dionisio, el huracán Mitch lo dejó prácticamente intacto.

Fotografía del estribo y parte del tablero de la margen de Esquipulas.

Restos de una parte de tablero de la margen de San Dionisio.

Restos de cordones de postesado de anterior puente.

Estribo derecho del anterior puente (margen de Esquipulas)

Restos del tablero y de las obras de protección de estribos del anterior puente.

2.4. FOTOGRAFÍAS DEL PUENTE VADO

Motocicleta atravesando el puente vado.

Vista completa del puente vado.

Autobús cruzando el puente vado camino a Esquipulas.

Toma de datos desde el puente vado.

Vista de la crecida desde el lado de Esquipulas.

Estribo de la margen derecha socavado tras la crecida.

Puente vado rebosado por la crecida.

Estribo de la margen izquierda socavado y destruido tras la crecida.

MEMORIA DESCRIPTIVA

ÍNDICE

Página

1. OBJETO DEL PROYECTO 5

2. SITUACIÓN ACTUAL 5

3. FINALIDAD 6

4. DATOS PREVIOS DEL PROYECTO 7

4.1. TOPOGRAFÍA Y CARTOGRAFÍA 7
4.2. GEOLOGÍA Y GEOTECNIA 7
4.3. EFECTOS SÍSMICOS 8
4.4. CLIMATOLOGÍA 8
4.5. ESTUDIOS HIDROLÓGICO E HIDRÁULICO 9
4.6. ESTUDIO DE TRÁFICO, TRAZADO Y FIRME 9
4.6.1. ESTUDIO DE TRÁFICO 9
4.6.2. TRAZADO 10
4.6.2.1. Criterios de diseño geométricos 10
4.6.3. SELECCIÓN DEL FIRME 10
4.6.3.1. Factores condicionantes del firme 10

5. ESTUDIO DE SOLUCIONES 11

5.1. TRAZADO 11
5.2. TIPOLOGÍA ESTRUCTURAL 11
5.2.1. PUENTE ARCO 12

6. CÁLCULO ESTRUCTURAL 13

7. REPLANTEO 15

8. PROCEDIMIENTO CONSTRUCTIVO 16

9. DEMOLICIÓN Y GESTIÓN DE RESIDUOS 16

10. ESTUDIO DE IMPACTO AMBIENTAL 17

11. ESTUDIO DE SEGURIDAD Y SALUD 17

12. CONTROL DE CALIDAD 18

13. JUSTIFICACIÓN DE PRECIOS 18

14. PLAN DE OBRA 18

15. NORMAS, INSTRUCCIONES, PLIEGOS Y ORDENANZAS APLICADOS 19

16. PRESUPUESTO 19

17. DOCUMENTOS DE QUE CONSTA EL PROYECTO 20

18. CONCLUSIÓN 20

1. OBJETO DEL PROYECTO

El objeto del presente Proyecto es la realización del Proyecto Fin de Carrera (a partir de ahora, y para abreviar, lo llamaremos PFC) de las titulaciones impartidas por la Universidad de Burgos de Ingeniería de Caminos, Canales y Puertos e Ingeniería Técnica de Obras Públicas, por parte de los alumnos: Miriam Sacristán Terradillos, Sergio Agustín Ratón Alomar, Raquel Estrada Merino y Alfonso Cid González, bajo la supervisión de los tutores: D. Miguel Ángel Vicente Cabrera y Juan Manuel Manso Villalaín, Doctores Ingenieros y profesores titulares de la Escuela Politécnica Superior (a partir de ahora EPS) de la Universidad de Burgos.

Según lo dictado en el reglamento de PFC de la EPS, la finalidad de dicho proyecto es que el alumno elabore un trabajo donde se apliquen de una manera más práctica los conocimientos adquiridos a lo largo de sus estudios demostrando sus dotes de creatividad. Los objetivos básicos que se buscan con la realización del PFC son:

- Preparar al alumno para la resolución de problemas propios del ejercicio profesional en el ámbito de su titulación.
- Completar su formación aprendiendo las nuevas tecnologías que se incorporan en relación con su titulación.
- Fomentar el trabajo en equipo.
- Saber buscar y seleccionar la información necesaria.
- Aprender a elaborar informes y a redactar trabajos técnicos.
- Conocer los métodos de exposiciones orales y aplicarlos correctamente.
- Aumentar su capacidad para la planificación y organización del trabajo.

En el aspecto técnico, el objeto del PFC, se propone la construcción de un puente de carretera en las cercanías de Esquipulas, provincia de Matagalpa, Nicaragua, se trata de una zona afectada por las crecidas extremas del Rio Grande de Matagalpa.

La población que se beneficiará de dicho proyecto será muy amplia, puesto que el sitio del proyecto está sobre la vía principal de acceso a los municipios de San Dionisio, San Ramón y Matagalpa, cabecera departamental del departamento homónimo, y esto representa una circulación constante de pobladores en vehículo, a pie, a caballo…

Esta carretera estaba conectada por un puente que fue destruido por el Huracán Mitch, el cual no se ha vuelto a reconstruir por motivos económicos.

2. SITUACIÓN ACTUAL

El estado actual de dicha zona reclama la construcción de un puente ya que es un importante punto de acceso a la ciudad de Matagalpa, centro comercial y cultural de la zona.

En estos momentos existe un puente provisional que no cumple los objetivos requeridos para esta conexión, con pequeñas crecidas del rio, el agua cubre el puente por completo, erosionando los estribos y por tanto produciendo un gasto en mantenimiento.

Asimismo, es una zona por el cual el tráfico pesado accede a la ciudad de Matagalpa y con las lluvias queda inhabilitado el paso existente.

En las siguientes fotografías se pueden apreciar las características descritas:

3. FINALIDAD

La ejecución del proyecto está dentro del marco de la búsqueda del crecimiento económico de la región, puesto que es indispensable para la libre circulación en todo tiempo, debido a que facilitaría el cruce del Rio Grande de Matagalpa y acceder a la cabecera departamental.

Los objetivos que se pretenden alcanzar con este proyecto son:

- Facilitar el acceso de los habitantes de la región a la cabecera departamental.
- Mejorar las condiciones de vida de la población mediante la circulación en todo tiempo permitiéndoles realizar sus actividades de negocio, venta de la producción agrícola, acceso a estudios universitarios, salud y otros con los que no cuenten en el municipio

Los resultados esperados con la ejecución de este proyecto son los siguientes:

- La producción cafetalera y los granos básicos (potencial actividad agrícola del municipio) no se estancará sino que tendrá fluidez comercial en todo tiempo.
- Las familias Esquipuleñas tendrán acceso a la salud especializada de los hospitales regionales.
- Los jóvenes Esquipuleños tendrán acceso a la educación superior de las universidades de la cabecera departamental.
- Los organismos no gubernamentales e instituciones nacionales con sede en Matagalpa y que inciden en el desarrollo del municipio no tendrán atrasos en sus operaciones, ya que el invierno no será más factor de incomunicación, puesto que el puente permitirá el pase del rio Grande de Matagalpa en todo tiempo.

4. DATOS PREVIOS DEL PROYECTO

4.1. TOPOGRAFÍA Y CARTOGRAFÍA

El objeto de la elaboración de este anejo es conseguir una definición precisa del terreno de actuación, para una mayor precisión en los cálculos y dimensiones geométricas de las distintas construcciones, en cuanto a movimientos de tierras, etc.

Debido a la falta de datos topograficos se ha realizado un levantamiento topográfico, este está referido al sistema de coordenadas UTM, el área del proyecto, se encuentra en su totalidad dentro del uso 16 y la banda P.

Para la correcta referenciación del estudio no se disponía de vértices geodésicos de ningún tipo, por lo que la ubicación de los puntos iniciales se realizó mediante GPS, el cual nos proporciona directamente las coordenadas UTM con una precisión de ±4m.

Los resultados pueden encontrarse en el Anejo Nº2 Topografía y Cartografía

4.2. GEOLOGÍA Y GEOTECNIA

Este documento tiene por objeto el estudio de la geología del terreno donde se proyecta la ejecución del puente, para la redacción del mismo se ha realizado la recopilación de datos del Instituto Nicaragüense de Estudios Territoriales (INETER) y también se ha analizado el mapa geológico proporcionado por un geólogo de la zona.

Nos encontramos con que el grupo que predomina en casi todo el territorio de Matagalpa, como su propio nombre indica, es el grupo Matagalpa (Tomm). Este grupo de rocas comprenden terrenos con crestas y macizos elevados y de grandes extensiones con fuertes y continuas pendientes, se presentan ligeramente plegadas y entre cortadas en profundos valles.

Su composición litológica está representada por lavas félsicas, andesitas, basaltos, andesitas dacitas, así como tobas cloríticas de color verdusco muy masivas de gran impermeabilidad. Estas rocas se encuentran falladas y fracturadas, la mayoría de estas se encuentran segmentadas, cabe destacar que este tipo de roca aflora en la margen izquierda (desde Esquipulas) en toda la longitud del cauce de la zona de estudio.

Además se incluye el estudio de suelos realizado por la empresa IMS (Ingeniería de Materiales y Suelos, para el correspondiente estudio geotécnico.

En base a los resultados obtenidos de la Prueba Normal de Penetración (SPT) y los ensayos de laboratorio se recomienda:

a) Cimentar con zapata aislada a partir de 1,50 m. con una presión admisible de 1,80 kg/cm^2, debiéndose mejorar 1,20 m. en el Sondeo No.1 y 0,80 m. en los Sondeos No.2, No.3 y No.4 referidos al Nivel del Terreno Natural.

b) La presión admisible de 1,80 kg/cm^2 es referida una vez mejorado 1,20 m. en el sondeo No.1 y 0,80 m en los Sondeos No.2, No.3 y No.4.

c) El Material para el mejoramiento debe ser cualquiera de las opciones siguientes:

- Material selecto
- Suelo selecto en una proporción de 1,10 (puede utilizarse material del sitio sin presencia de materia orgánica).
- Concreto pobre (4 bolsas de cemento por m^3)

d) Si por razones de diseño la profundidad de desplante recomendada resultare excesiva y si se pretende cimentar a menor profundidad entonces se deberá excavar hasta profundidad recomendada en el inciso a).

e) Es entendido que la profundidad de desplante definitiva estará en dependencia del análisis de socavación general y local, ya que las profundidades anteriormente indicadas no contemplan dicho aspecto.

f) Finalmente se recomienda que en base al análisis hidráulico del rio se dote al puente proyectado, de las obras necesarias contra la erosión y/o socavación que podrían afectar su estabilidad.

4.3. EFECTOS SÍSMICOS

Para el estudio de las acciones sísmicas sobre la construcción a realizar se ha empleado el "Reglamento Nacional de la Construcción" RNC-07. La estructura a la que se hace referencia el presente proyecto se clasifica como de gran importancia estratégica para atender a la población inmediatamente después de ocurrido un desastre, y es necesario que permanezcan operativas luego de un sismo intenso. Además pertenece a aquellas estructuras cuya falla total o parcial causaría pérdidas económicas o culturales excepcionales.

Llegando a la conclusión que la fuerza del sismo equivaldría a una fuerza horizontal igual a 0.3 veces el peso total de la estructura; y la componente vertical, no se tiene en cuenta porque no es predominante.

4.4. CLIMATOLOGÍA

Para el estudio del presente proyecto es necesario considerar diferentes aspectos climatológicos que pueden afectar tanto al comportamiento de la estructura, como a la cronología de la ejecución de la obra y las características de los materiales.

En Nicaragua, como en el resto de países centroamericanos, nos encontramos un clima tropical, y por lo tanto, presenta condiciones térmicas similares durante todo el año que consta de dos estaciones: el invierno (abarca de mayo a octubre), y el verano (de noviembre a abril). La época de lluvias, se extiende de junio a noviembre.

Dentro de Nicaragua, el Instituto Nicaragüense de Estudios Territoriales (INETER), clasifica la zona de ubicación de nuestro proyecto como "clima de sabana tropical", que se extiende por la zona del Pacífico y las estribaciones occidentales del macizo montañoso central. Tiene unas temperaturas medias de entre 21°C y 30°C y máximas hasta 41°C. Se caracteriza por una estación seca de noviembre a abril, la precipitación anual máxima es de 2.000 mm y la mínima entre 700 y 800 mm anuales.

Se observa, que en la ubicación del proyecto, hay una precipitación aproximada de 1400 a 1800 mm al año, un dato bastante alto, si se tiene en cuenta que esta precipitación cae durante apenas 5 meses, provocando por esto grandes intensidades de lluvia, si a esto se le suma la alta densidad de la red de drenaje pluvial, se obtiene como consecuencia un aumento muy violento en los caudales de los ríos.

La temperatura es bastante uniforme durante todo el año, variando muy poco entre las estaciones de verano e invierno, esto es debido al tipo de clima tropical, como ya se ha mencionado antes.

Dentro del país, la zona del proyecto, se encuentra en una zona de clima frio, en relación con el clima de Nicaragua en general, debido a que es una zona montañosa.

También se observa que en la ubicación del proyecto, el mapa de isotacas nos muestra una velocidad del viento de 40 m/s, es decir, 144 km/h.

Los eventos extremos, tienen siempre un alto periodo de retorno, y por lo tanto, una probabilidad muy baja de ocurrencia, por lo que no se suelen diseñar obras para este tipo de episodios, ya que se dispararían los gastos, y además la obra estaría muy sobredimensionada.

4.5. ESTUDIOS HIDROLÓGICO E HIDRÁULICO

Para el cálculo de los diferentes elementos estructurales, así como la realización de la Planificación de la Obra y el Pliego de Prescripciones es preciso contar con diversos datos acerca de la precipitación lluviosa, caudales estimados y cotas de lámina de agua.

Cuenca hidrográfica

La cuenca vertiente correspondiente a la sección del proyecto cuenta con un área de 1680.9349 km², una longitud máxima del cauce principal de 126.8926 km2 y un desnivel de 965m.

Cálculo del caudal de diseño

Se ha determinado del caudal de diseño, se ha utilizado el método del NRCS (Natural Resources Conservation Sevices), para cuencas medianas, superiores a 300has con un periodo de retorno de 50 años. Como resultado tenemos un caudal punta de 2985.6908 m³/s.

Cálculo de máxima cota de la lámina de agua

Con el caudal punta, para un periodo de retorno de 50 años, introducimos dicho caudal junto con la topografía de la zona en la aplicación informática HEC-RAS. Ésta aplicación, nos permite obtener una simulación del flujo de agua en la sección considerada y con el caudal considerado.

La cota de la lámina de agua en la sección del proyecto es de 323.29m, por lo que siguiendo las recomendaciones para puentes vehiculares de Nicaragua la cota inferior del tablero no podrá ser inferior a 324.29m.

4.6. ESTUDIO DE TRÁFICO, TRAZADO Y FIRME

El objetivo es justificar la solución a adoptar, tanto como en número de carriles como la capa de firme.

Debido a la falta de estaciones de aforos y a la imposibilidad de tomar datos de tráfico, y en especial del tráfico pesado que circulará por el futuro puente, se ha recurrido a datos poblacionales de las localidades afectadas, autobuses entre las dos de estas ciudades, así como a la importancia comercial y cultural inherente.

4.6.1. ESTUDIO DE TRÁFICO

Las zonas afectadas con la realización del puente son: Matagalpa, Esquipulas, San Dioniso, San Ramón.

El Ministerio de Transporte e Infraestructura de Nicaragua pretende reformar la carretera que conectará dicho puente, ya que mejora la accesibilidad entre estas localidades de manera importante.

Se han recogidos datos sobre los autobuses que pasan por el municipio de Esquipulas, entre esta ciudad y Matagalpa. Obteniéndose un total de 18 autobuses al día que circulan por esta ruta, pasando por el puente provisional, por lo que estos transitarán igualmente por el puente nuevo.

También se conoce que es una zona por la que pasan camiones con frecuencia alta.

Por lo que se ha llegado a la conclusión que se dispondrá de un tráfico pesado de intensidad media.

Considerando esto y debido a las condiciones económicas se realizará en el puente objeto de este proyecto, una sección de losa de 11,20 metros considerando una velocidad de proyecto de 60 km/h

4.6.2. TRAZADO

El objeto de este punto es:

- Definir los criterios de diseño geométrico en los que se va a basar el trazado del puente, tanto en planta como en alzado, y en la coordinación entre ambos.
- Describir las características más importantes del trazado de los distintos ejes que componen el puente así como las características geométricas.

4.6.2.1. Criterios de diseño geométricos

VELOCIDAD DE PROYECTO

Después de la consideración de diferentes factores desarrollados en este apartado y teniendo en cuenta que se trata de una carretera que esta por desarrollar, la velocidad de proyecto del puente a efectos de diseño será Vp= 60km/h.

CARACTERÍSTICAS DEL TRAZADO

El trazado en planta debe de ser recto para que la ejecución del puente sea más sencilla.

El trazado en alzado del puente debe de ser horizontal para mayor facilidad constructiva y evitar así costes mayores.

Los trazados en planta y alzado se han coordinado con el fin de lograr que el usuario pueda circular por el puente de manera cómoda y segura.

La calzada y los arcenes se dispondrán con una misma inclinación transversal mínima del 2% hacia cada lado a partir del eje de la calzada.

4.6.3. SELECCIÓN DEL FIRME

4.6.3.1. Factores condicionantes del firme

Para obtener la sección estructural que vamos a incorporar en el firme, atendemos a los aspectos que puedan condicionarla, como son tráfico, explanada y otros condicionantes desarrollados.

La carretera que afecta al puente está prevista para su mejora en un periodo corto de tiempo. Por lo tanto, a la vista de todos estos condicionantes y teniendo en cuenta las soluciones adoptadas normalmente en la zona, se ha seleccionado como firme una capa de hormigón de 15 cm para que no quede obsoleta cuando se repare la carretera. Esta capa de hormigón será armada, y para ello dispondrá de un mallado de diámetro 16.

5. ESTUDIO DE SOLUCIONES

El objeto del siguiente anejo es, partiendo de la información recabada y reflejada en los anejos anteriores, proponer y analizar diversas alternativas constructivas para la ejecución del proyecto. Además de describir y justificar la tipología estructural más adecuada, que permita el paso del rio.

5.1. TRAZADO

Una vez definido el emplazamiento de la obra existen una serie de características geofísicas propias del lugar que directamente inciden sobre el proyecto: la topografía y naturaleza del terreno, las acciones climáticas y sísmicas, y los aspectos fluviales.

La orografía y las condiciones ya comentadas del terreno obligan a definir un trazado que, en alzado, está principalmente determinado por los condicionantes topográficos, la presencia del Río Grande de Matagalpa, y la situación económica y tecnológica del país.

De este modo se estima conveniente salvar el paso por encima del cauce mediante un puente que no tenga ninguna pila sobre el río; debido a los grandes caudales que hay, y la posibilidad de que estas crecidas afecten a la cimentación provocando el colapso de la estructura. Por otro lado deberá ajustarse a los condicionantes de Nicaragua, como son la falta de recursos económicos para la obtención del equipo de trabajo, y la imposibilidad de conseguir buenas características de los materiales.

El emplazamiento de la estructura será aguas abajo del puente vado y aguas arriba del anterior puente existente. De tal forma que el nuevo puente quede sobre la zona donde se hicieron los ensayos del terreno. De este modo el trazado en planta es recto, como se observa en la anterior figura, y la velocidad de proyecto es de 60 km/h.

Por tanto, el objetivo fundamental de este Proyecto se centra en ejecutar un nuevo puente, imponiendo el trazado en alzado. Así, teniendo en cuenta la longitud del cauce del río, la forma del terreno, las crecidas producidas en la época de lluvias, los materiales disponibles y la facilidad de construcción, se ha considerado que los criterios de selección de la alternativa adecuada vienen determinados fundamentalmente por:

- Cumplimiento de la normativa vigente.
- Máxima comodidad y seguridad para el usuario.
- Estética del trazado así como minimización del impacto ambiental y visual.

Considerando estos aspectos y aplicando los criterios de diseño geométrico reflejados en el Anejo Nº 7: Estudio de Tráfico, Trazado y Firme, en cuanto a trazado en planta, trazado en alzado y coordinación de los trazados en planta y alzado, se ha optado por la solución que aparece representada en el Documento Nº 2: Planos.

5.2. TIPOLOGÍA ESTRUCTURAL

Han sido estudiadas diversas tipologías como soluciones posibles, pero han sido descartadas porque no cumplen con alguna de las restricciones que se tienen redactados en el Anejo nº 8 Estudio de soluciones.

La consideración del coste, la facilidad constructiva, el entorno como un espacio natural de elevado valor paisajístico así como las exigencias del trazado, tanto en alzado como en planta, hacen que la tipología óptima desde el punto de vista estructural sea el **puente arco y el puente pórtico de pilas inclinadas**, que prácticamente es una evolución del arco. Estas soluciones conjugan un óptimo resultado estético y un coste asumible, y serán las que se pasarán a desarrollar en sus respectivos proyectos de construcción

La longitud del puente es importante, los condicionantes hidráulicos y económicos son muy destacables, así como el aspecto paisajístico por encontrarse en un entorno totalmente natural.

Se ha tenido en cuenta también la presencia y tipología del puente provisional actual, y del existente anteriormente, que fue destruido por el huracán Mitch, de modo que la integración de la nueva construcción sea la más adecuada.

5.2.1. PUENTE ARCO

La solución adoptada en este proyecto es la del Puente Arco con tablero superior que permite un óptimo acomodo del puente al paisaje del valle con una integración muy ajustada

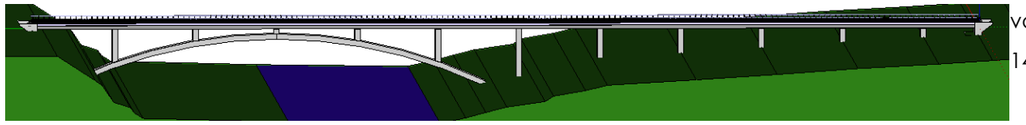

.

El puente arco está constituido por dos elementos fundamentales. El arco, principal elemento resistente, cuya forma viene determinada como el antifuinicular de la carga permanente del puente y el tablero, cuya geometría se acopla a las exigencias de la rasante de la carretera y que tiene un papel resistente secundario. Entre ellos se disponen los pilares que transfieren la carga del tablero al arco y éste la transmite a la cimentación.

La geometría del arco determina que los esfuerzos que lo solicitan, bajo la acción de la carga permanente, sean casi exclusivamente de compresión, con la introducción de una fuerte componente inclinada en el terreno. Sin embargo, bajo la sobrecarga de uso, que no tiene porqué tener una distribución antifunicular, se producen tanto compresiones como flexiones.

El material adoptado sería el hormigón armado para arco y tablero. La luz del puente y las características del valle condicionan la elección del arco.

Esta tipología cumple con los condicionantes antes descritos, evitando sobre todo las pilas en el cauce y dando una mayor sección para el paso de las aguas. Además se considera que el resultado estético y la integración paisajística del puentes arco es buena. Esta solución es recomendable.

Se trata de un puente de carretera de 175 metros de longitud, en planta, con un tramo recto de anchura constante de 11.20 metros. La sección del puente corresponde a una sección cajón con canto variable en el tramo correspondiente a las pilas inclinadas. El canto es constante de 1 metro en toda su longitud.

Se divide el puente en 12 vanos, de los cuales uno tiene 10 metros al considerarse como vano extremo y el resto de 15 metros de longitud. El puente consta de una altura máxima de 14 metros sobre el terreno.

La cimentación del arco es superficial, la cimentación de las pilas es profunda a causa de los condicionantes del terreno y teniendo en cuenta a su vez en la medida de lo posible el factor económico.

Y en cuanto a los estribos se diferencian los dos, dado que uno de ellos tiene su cimentación compartida con la del arco, mientras el otro presenta una cimentación profunda por pilotes.

6. CÁLCULO ESTRUCTURAL

En este apartado en primer lugar se han definido las acciones a considerar en el cálculo del puente, conforme a las especificaciones contenidas en la norma RNC-07 Nicaragua (Reglamento Nacional de construcción 2007), Especificaciones AASHTO para el diseño de puentes por el método LRFD y en el Eurocódigo 2 : Proyecto de estructuras de Hormigón de Junio del 2010 indicando las distintas combinaciones.

Posteriormente se han establecido las características de los distintos materiales a emplear en la ejecución y los coeficientes de seguridad, según las normas ya mencionadas.

Para el cálculo de los esfuerzos del tablero y pilas, se ha utilizado el programa informático SAP 2000 versión 14.0; este programa realiza un cálculo mediante el método de elementos finitos de tipo barra, shell (membrana), y sólido. En el caso del tablero, el cálculo, al realizarse únicamente con elementos barra, se realiza con un método asimilable al cálculo matricial, para adquirir las reacciones en pilas y estribos se trabaja con un modelo sólido ya que se ha considerado que éste es un poco más preciso para estos casos. El cálculo de los estribos y cimentaciones se ha realizado con la ayuda del programa CYPE 2010, versión M.

Para la obtención de los esfuerzos del tablero se ha introducido un modelo tridimensional. El modelo 3D introducido consta de 4387 barras sin incluir las pilas ni el arco.

El tablero se ha modelizado como un emparrillado de vigas siguiendo las recomendaciones de Javier Manterola en su libro "Puentes: Tomo I".

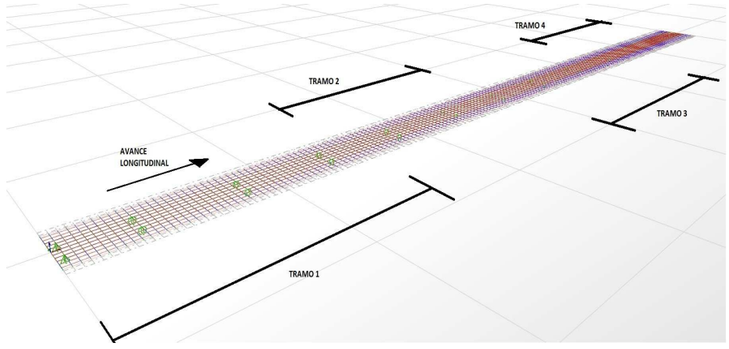

Está formado por una losa maciza, cuyas dimensiones se encuentran detalladas en la documentación gráfica del presente proyecto, que dividiremos en vigas longitudinales y transversales.

Para la obtención de los esfuerzos en las pilas se ha introducido un modelo tridimensional de elementos sólidos y lineares (barras).

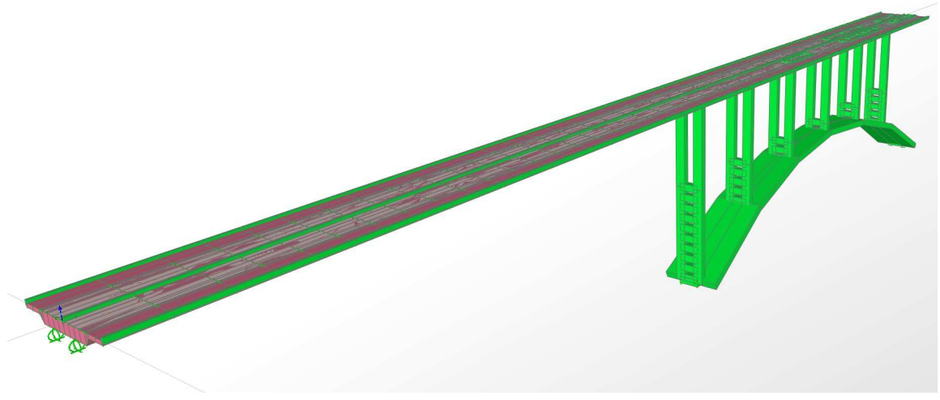

El modelo 3D introducido consta de un tablero sólido, 6 pilas dobles y un arco formados por barras.

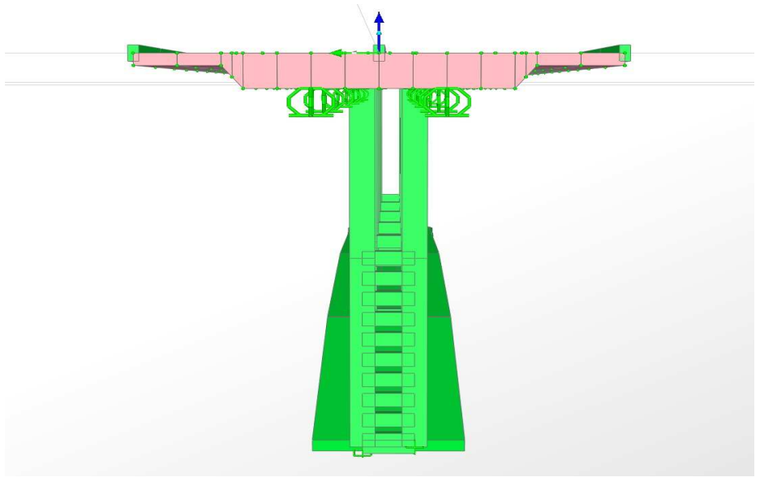

En el tramo singular de las pilas empotradas en el arco, se ha hecho una equivalencia considerando cada neopreno como una pila de hormigón hallando su longitud para que ésta funcione de la misma manera como lo realizaría el neopreno, generando las misma flecha por una carga horizontal.

El resto de pilas se han sustituido por la equivalencia del conjunto neopreno-pila, esto equivalente a un apoyo simple en dirección vertical y dos muelles uno longitudinal y otro transversal con la rigidez necesaria para que el conjunto trabaje de manera similar a la realidad.

Los esfuerzos se han ido obteniendo para cada uno de los estados de carga introducidos en las distintas barras. Una vez calculados, se han combinado según establece las Especificaciones AASHTO para el diseño de puentes por el método LRFD. Con los esfuerzos combinados, se ha ido definiendo la armadura según los diferentes estados límites últimos indicados en el Eurocódigo 2.

Una vez establecida la armadura para cada sección, se ha realizado la comprobación frente a la fisuración y la no deformación excesiva del tablero del puente siguiendo también el Eurocódigo 2.

- Cálculo de los aparatos de apoyo

En esta estructura se necesitará apoyos elastoméricos zunchados que cumplan las siguientes características:

Tiene que soporte una carga de 2630 kN y con unas dimensiones en planta de 350 x 500 mm y espesor de 50 mm.

- Cálculo de juntas de dilatación

La solución propuesta en función de los movimientos existentes así como las cargas de tráfico actuantes consiste en una chapa metálica de 6 mm de espesor apoyada en el estribo y anclada al tablero con tornillos M12 cada 50 cm, la cual será detallada en planos. Está formada por un elemento que apoya en los extremos del tablero y del estribo transmitiéndoles las cargas de tráfico que actúan directamente sobre la junta.

- Cálculo de Estribos y Cimentaciones

En cuanto a los estribos y cimentaciones del puente, se ha definido la tipología de la cimentación, así como las dimensiones generales de los elementos que configuran los estribos, losas de transición, localización de aparatos de apoyo, etc.

La geometría de estribos y demás elementos quedan perfectamente referenciados en la documentación gráfica del proyecto.

ANEXO I: PRUEBA DE CARGA

El objetivo de este anejo es la definición completa de la prueba de carga a realizar en el puente antes de la apertura de la obra.

Este anejo se ha dividido en los siguientes apartados:

- Memoria
- Planos
- Pliego de Prescripciones técnicas particulares
- Presupuesto

- Memoria: Se define el plazo de ejecución de la prueba de carga así como la materialización de las cargas en forma de camiones.

Se plantean cuatro estados de carga diferentes:

- Estado de carga número uno: Carga de todo el vano completo.

- Estado de carga número dos: Carga de la mitad longitudinal del tablero en la zona del arco.

- Estado de carga número tres: Simétrico respecto del estado de carga número dos.

- Estado de carga número cuatro: Carga de la mitad central longitudinal del tablero.

Se definen los puntos de medida, determinando el desplazamiento vertical teórico esperado en cada uno de ellos y los criterios de aceptación de las medidas reales en el momento de ejecución de la prueba.

- Planos: En el anejo se adjunta un plano en el que se refleja la posición de los camiones en los distintos estados de carga.

- Pliego de prescripciones técnicas particulares: En el pliego se definen las condiciones de realización de la prueba de carga, así como las de abono y medida de la misma.

- Presupuesto: En el presupuesto se presenta una justificación del precio de unidad de prueba de carga. Este precio asciende a **64506.65** Córdobas, o lo que es lo mismo **2150.22** € ó **2932.12** $.

7. REPLANTEO

En el presente anejo se dispondrán los datos necesarios para la correcta materialización de la obra en el terreno, con una precisión adecuada.

Para ello, al igual que se realizó en el levantamiento topográfico, se utilizara el sistema de referencia UTM, estando todas las coordenadas de los puntos dentro de la pagina 16-P.

En primer lugar se detalla la ubicación de las bases de replanteo, imprescindibles para ubicar en el terreno los puntos singulares.

A continuación y de acuerdo con el proceso constructivo, se detallaran las coordenadas de la ubicación de pilotes, zapatas, arco, estribos y pilas.

Por último se muestran las coordenadas de las secciones más representativas del tablero.

Todos los datos reflejados en este anejo se tomaran especialmente en cuenta en el montaje de cimbras, encofrados, así como para la colocación de pilotes.

8. PROCEDIMIENTO CONSTRUCTIVO

En este Anejo se tratará de dar una visión global del procedimiento constructivo del puente, dividiéndolo en diferentes fases de actuación.

El procedimiento constructivo será una ejecución "in situ" por fases separadas por elementos funcionales que se describirán más adelante. Se considera que el procedimiento más conveniente para el caso que nos ocupa es el de cimbra apoyada en el suelo.

Dado que en este caso se trata de salvar un río, y al ser necesario operar en el tramo central del cauce, se procederá a realizar una obra provisional previa a la colocación de la cimbra. El objetivo de esta obra es asegurar que una subida de las aguas no se lleve la cimbra colocada y cause la destrucción del puente durante la fase de construcción. Para ello se colocarán varios tubos de 2 metros de diámetro, dimensionados para dar paso al rio y sus crecidas. Además, las obras de cimbrado y hormigonado del vano principal deben realizarse durante la estación seca para así reducir el riesgo de las crecidas.

Antes de comenzar con las tareas del proceso constructivo, será necesario establecer unas operaciones previas, encaminadas a permitir el acceso de materiales y equipos a la zona de actuación de manera eficaz. Para ello se realizarán unas pistas o caminos que permitan acceder a todos los puntos donde es necesario actuar.

Inmediatamente después de estas operaciones se comenzará con la excavación del terreno natural en las zonas donde vayan las pilas, arco y estribos.

Una vez que se ha llegado a la cota indicada se procederá a realizar las cimentaciones de los distintos elementos funcionales del puente, y posteriormente la construcción de dichos elementos, como son los estribos y pilas verticales del futuro puente.

Una vez llegado a este punto de la obra, se montará la mencionada cimbra de la primera fase, que principalmente consiste en el vano principal del puente que es el que se encuentra sobre el cauce del río. Justo después de montar la cimbra se colocará el encofrado que se apoya en dicha estructura, se dispondrán las armaduras pasivas en la posición especificada en el Proyecto y se procederá al hormigonado.

El tablero del puente se construirá por fases. La primera fase consistirá en el arco del vano principal de la estructura junto con las pilas. La segunda fase consistirá en las pilas verticales que se encuentran sobre el arco y los estribos. En la tercera fase se ejecuta el tablero del puente, dejando las juntas constructivas necesarias, hasta llegar a estribos.

Como el puente tiene 3 fases diferenciadas, las cuales se realizarán en un total de 37 semanas, el número de días necesarios para su construcción será de 260. Otros 7 días más tarde será el momento a partir del cual puedan aplicarse las cargas permanentes. Éstas son el extendido de la capa de impermeabilización del tablero, la ejecución del firme, la colocación de las impostas, así como todos los elementos auxiliares.

La ejecución del puente finaliza con la realización de la preceptiva prueba de carga de la estructura, la cual se llevará a cabo transcurrido al menos 90 días desde la última operación de hormigonado, tal y como se indica en el Pliego de Condiciones del apartado Prueba de carga del Anejo nº 9. Cálculo Estructural.

9. DEMOLICIÓN Y GESTIÓN DE RESIDUOS

El objetivo del presente apartado es la descripción y valoración de las obras necesarias para llevar a cabo la demolición del puente vado que se encuentra ubicado en la actualidad a 50 metros aguas arriba del futuro emplazamiento del nuevo puente aéreo vehicular, según se define en los planos de situación y emplazamiento correspondientes.

Las obras consisten en el derribo de dicho puente vado hasta el fondo natural o lecho del rio, para el posterior traslado del concreto que no sea apropiado para revestimiento a vertedero.

Una vez ejecutado el puente aéreo, el actual vado ya no tendrá ninguna utilidad, siendo además su conservación, contraproducente, por los siguientes motivos:

- El vado, constituye una barrera artificial en el cauce natural del río.
- La estructura del vado ha sufrido numerosas crecidas, afectando a los componentes de éste. Con motivo de las futuras crecidas, la estructura podría colapsar y ser arrastrada aguas abajo, comprometiendo la seguridad estructural del proyecto.
- Es inseguro el paso por el puente en las épocas de lluvia.

El volumen de concreto a demoler de forma aproximada será de 1541.55 m³.

La demolición se realizará en su totalidad por medios mecánicos, con el objetivo de aumentar los rendimientos, pero sobre todo de prácticamente anular los riesgos hacia las personas, por lo que no será necesario tomar medidas de seguridad especiales.

El proceso se llevará a cabo mediante una retroexcavadora equipada con martillo hidráulico.

La demolición no se llevará a cabo hasta que no esté habilitado el puente aéreo vehicular, para que el actual puente vado, con las correspondientes reparaciones, pueda servir de paso provisional durante la ejecución de la obra.

Además para facilitar el proceso de demolición es importante que se efectúe durante la época de estiaje.

10. ESTUDIO DE IMPACTO AMBIENTAL

En dicho anejo se valora el impacto ambiental que el proyecto generará, tanto a largo plazo como a corto plazo en la zona.

La evaluación de impacto ambiental se basa en el SISTEMA DE EVALUACIÓN AMBIENTAL DE NICARAGUA (Decreto 76-2006).

El sistema de evaluación mencionado, clasifica el proyecto como una OBRA HORIZONTAL.

Se ha tenido en consideración que el proyecto se encuentra fuera de cualquier área protegida, y además situándose la más cercana a unas 10 millas (16 km) y está cercano a tres tipos de ecosistema (Ecosistema SPA-1: Sistema productivo agropecuario, Ecosistema VIAd: Lava con escasa vegetación y Ecosistema IB1a(1)-2: Bosque deciduo de bajura o submontano, intervenido).

A su vez ninguno de los ecosistemas en los que se encuentra enmarcado, corre riesgo de ser alterado por causa de la obra.

Por todo esto, y al no estar incluido dentro de las tres primeras categorías ambientales, se considera un proyecto de bajo impacto ambiental, por lo tanto no está sujeto a un estudio de impacto ambiental para el otorgamiento de un permiso ambiental, ni requiere de la autorización ambiental del Ministerio del Ambiente y los Recursos Naturales (MARENA).

Aún así, el Nuevo FISE ha diseñado Instrumentos Ambientales que conforman el Sistema de Gestión Ambiental (SISGA-FISE) los cuales son aplicables a proyectos de categorías ambientales IV y V que por su incidencia ambiental deben llevar una Evaluación de Emplazamiento y un Análisis Ambiental.

Con todo esto se ha realizado una evaluación del emplazamiento o prefactibilidad ambiental y un análisis ambiental, que se compone de un estudio de la calidad ambiental del sitio sin considerar el proyecto e impactos ambientales que genera el proyecto, llegando a la conclusión del programa de mitigación de los impactos ambientales generados por el proyecto programa de contingencias ante riesgos que se tiene que desarrollar.

Todo esto es detallado en el Anejo correspondiente.

11. ESTUDIO DE SEGURIDAD Y SALUD

En el presente Proyecto Fin de Carrera se ha realizado un estudio específico de Seguridad de Salud debido al obligado cumplimiento del artículo completo del Real Decreto número 1627/1997, de 24 de Octubre, por el que se implanta la obligatoriedad de la inclusión de un Estudio de Seguridad y Salud en el trabajo en los proyectos de obras en que se den alguno de los supuestos siguientes:

- Que el presupuesto de ejecución por contrata sea igual o superior a 450.000 euros.

- Que la duración estimada sea superior a 30 días laborables, empleándose en algún momento más de 20 trabajadores simultáneamente.

- Que el volumen de mano de obra estimada, entendiendo por tal la suma de los días de trabajo del total de los trabajadores en la obra, sea superior a 500.

- Las obras de túneles, galerías, conducciones subterráneas y presas.

Como el presente proyecto cumple con varias de dichas condiciones se ha realizado el Anejo de Estudio de Seguridad y Salud. Dicho estudio consta de Memoria, Planos, Pliego de Prescripciones y Presupuesto.

Asciende el presupuesto base de licitación a la expresada cantidad de:

- DOCEMIL CUATROCIENTOS NOVENTA Y NUEVE EUROS CON CUATRO CÉNTIMOS.
- TRESCIENTOS SETANTA Y CUATRO MIL NOVECIENTOS SETENTA Y UN CÓRDOBAS CON VEINTE CENTAVOS.
- DIECISIETE MIIL CUARENTA Y CUATRO DÓLARES CON QUINCE CENTAVOS.

12. CONTROL DE CALIDAD

En este anejo se da una relación valorada de los ensayos a realizar, como mínimo, para la ejecución de las obras definidas en el presente Proyecto.

Se realizarán ensayos para la explanación, rellenos, hormigones, zahorras, mezclas bituminosas, riegos, y acero para armaduras pasivas.

En el presupuesto del presente proyecto sólo se incluirá la cantidad que supere el 1% del presupuesto de ejecución material del proyecto sin la inclusión del control de calidad. Esta cantidad asciende a 1.014.725,40 Córdobas.

13. JUSTIFICACIÓN DE PRECIOS

El objeto del presente anejo es el de detallar la procedencia de los distintos precios empleados en el documento "Presupuesto".

Para los precios se ha empleado:

- La guía de costos del Nuevo FISE.
-

Para la correcta utilización de la misma hay que tener en consideración que los costos reflejados en ella se encuentran a nivel de costos directos, con referencia a la ciudad de Managua y se deben considerar como costos directos estimados.

Las variables a considerar para trasladar a precios de venta son:

- Factor transporte (distancia, tiempo, volumen a transportar y el grado de dificultad para acceder al sitio del proyecto)
- Costos indirectos, administración, imprevistos y utilidad
-

Porcentaje por deslizamiento de la moneda, El último dato que se ha conseguido, es del 63%, por lo que para obtener el valor real en éste momento habría que multiplicarlo por 1.63.

14. PLAN DE OBRA

Se ha procedido a realizar un análisis de las distintas zonas de trabajo y tajos en los que se considera se debe dividir cada una de las áreas, estudiándose la relación y dependencia de ellas, comprobándose las distintas interferencias que obligan, en ocasiones, a simultanear los trabajos o a desfasarlos en el tiempo según las necesidades constructivas.

En anejo de Plan de Obra, se detallan las duraciones de los trabajos a realizar en cada zona, concluyendo que el plazo previsto para la ejecución de las obras es de 10 meses.

15. NORMAS, INSTRUCCIONES, PLIEGOS Y ORDENANZAS APLICADOS

En la redacción del presente Proyecto se han tenido en cuenta:

- EC-2 Eurocódigo 2. Estructuras de hormigón.

- Pliego de Prescripciones Técnicas Generales contenido en las especificaciones generales para la construcción de caminos, calles y puentes (NIC 2000) del Ministerio de transporte e infraestructura de la República de Nicaragua.

- Instrucción para la Recepción de Cementos (RC-O8) de 6 de junio de 2008.
- Instrucción de Hormigón Estructural EHE-08.
- Reglamento Nacional de Construcción RNC-07, marzo 2007, Dirección General de Normas de Construcción y Desarrollo Urbano de Nicaragua.
- Requisitos de Reglamento Para Concreto Estructural (ACI 318S-08) y comentario.
- Especificaciones AASHTO para el diseño de puentes por el método LRFD.
- Nota técnica sobre aparatos de apoyo para puentes de carretera, marzo 1995 del Ministerio de Obras Públicas, Transportes y Medioambiente de España
- Ley 31/1995, 8 de noviembre, de Prevención de Riesgos Laborales.
- REAL DECRETO 604/2006, de 19 de mayo, por el que se modifican el Real Decreto 39/1997, de 17 de enero, por el que se aprueba el Reglamento de los Servicios de Prevención, y el Real Decreto 1627/1997, de 24 de octubre, por el que se establecen las disposiciones mínimas de seguridad y salud en las obras de construcción.
- Pliego de Condiciones Particulares y Económicas que se establezcan para la contratación de estas obras.
- Criterios para la realización de Control de producción de los hormigones fabricados en central aprobado por orden de 21 de noviembre de 2001.
- Normas de Ensayo redactadas por el Laboratorio de Transporte y Mecánica del Suelo.
- I-IOPTMA. Ministerio de Obras Públicas, Transportes y Medio Ambiente. "Instrucción de Acciones a considerar en el proyecto de Puentes de Carretera-IAP-11".

16. PRESUPUESTO

Asciende el precio de ejecución del proyecto a la cantidad de:

- NOVENTA Y SIETE MILLONES SETECIENTOS NOVENTA Y UN MIL NOVECIENTOS TRECE CÓRDOBAS CON SESENTA Y CUATRO CENTAVOS.
- CUATRO MILLONES DOSCIENTOS CUARENTA Y DOS MIL DOSCIENTOS CUARENTA Y NUEVE DÓLARES CON SESENTA CENTAVOS.
- TRES MILLONES DOSCIENTOS VEINTISIETE MIL DOSCIENTOS NOVENTA Y SEIS EUROS CON TRECE CÉNTIMOS.

205 PRELIMINARES	5362708.39
207 SUB-ESTRUCTURA PARA PUENTES	30051830.61
211 SUPER ESTRUCTURA PARA PUENTE	48148447.92
213 SEÑALIZACIÓN HORIZONTAL Y VERTICAL	19256.47
214 MEDIDAS DE MITIGACIÓN Y PREVENCIÓN DE ACCIDENTES	374971.20
217 PRUEBA DE CARGA	64506.65
218 CONTROL DE CALIDAD	1014725.40
	85036446.64
15% IVA	12755467.00

TOTAL **97791913.64 Córdobas**

4242249.60 Dólares

3227296.13 Euros

17. DOCUMENTOS DE QUE CONSTA EL PROYECTO

MEMORIA DESCRIPTIVA

- ANEJO Nº01 Justificación del proyecto
- ANEJO Nº02 Topografía Y Cartografía
- ANEJO Nº03 gEOLOGÍA Y GEOTECNIA
- ANEJO Nº04 EFECTOS SÍSMICOS
- ANEJO Nº05 CLIMATOLOGÍA
- ANEJO Nº06 ESTUDIO HIDROLÓGICO E HIDRÁULICO
- ANEJO Nº07 TRAFICO, TRAZADO Y FIRME
- ANEJO Nº08 ESTUDIO DE SOLUCIONES
- ANEJO Nº09 CÁLCULOS ESTRUCTURALES
- ANEJO Nº10 REPLANTEO
- ANEJO Nº11 PROCEDIMIENTO CONSTRUCTIVO
- ANEJO Nº12 DEMOLICIÓN Y GESTIÓN DE RESIDUOS
- ANEJO Nº13 eSTUDIO DE IMPACTO AMBIENTAL
- ANEJO Nº14 ESTUDIO DE SEGURIDAD Y SALUD
- ANEJO Nº15 CONTROL DE CALIDAD
- ANEJO Nº16 JUSTIFICACIÓN DE PRECIOS
- ANEJO Nº17 Plan de Obra
- ANEJO Nº18 ESTUDIO FOTOGRÁFICO

PLANOS

PLIEGO DE PRESCRIPCIONES TÉCNICAS PARTICULARES

PRESUPUESTO

18. CONCLUSIÓN

Como conclusión a todo lo expuesto, tanto en esta Memoria como en el resto de documentos, se manifiesta que el presente proyecto se refiere a una obra completa, entendiéndose como tal la susceptible de ser entregada al uso general.

Burgos, 6 Febrero 2012

EL AUTOR DEL PROYECTO:

Dña. Miriam Sacristán Terradillos

- ÍNDICE DE PLANOS -

Nº DE PLANO	DESIGNACIÓN	Nº DE HOJAS
1	ÍNDICE DE PLANOS Y SITUACIÓN	
1.1	- ÍNDICE DE PLANOS	1
1.2	- ENCUADRE GEOGRÁFICO. SITUACIÓN	1
1.3	- EMPLAZAMIENTO	1
2	EMPLAZAMIENTO	
2.1	- PLANTA GENERAL	1
3	ESTRUCTURA	
3.1	- DEFINICIÓN GENERAL	
3.1.1	DEFINICIÓN GENERAL. PUENTE	1
3.1.2	DEFINICIÓN GENERAL. ARCO	2
3.2	- REPLANTEO	
3.2.1	ZAPATAS	1
3.2.2	ESTRIBOS	2
3.2.3	ARCO	1
3.2.4	PILAS	2
3.2.5	TABLERO	1
3.3	- CIMENTACIONES	
3.3.1	GEOMETRÍA	
3.3.1.1	ZAPATAS	1
3.3.1.2	ENCEPADOS	2
3.3.2	ARMADO	
3.3.2.1	ZAPATAS	1
3.3.2.2	ENCEPADOS	3
3.4	- ESTRIBOS	
3.4.1	GEOMETRÍA	2
3.4.2	ARMADO	4
3.5	- ARCO	
3.5.1	ARMADO	2
3.6	- PILAS	
3.6.1	GEOMETRÍA	2
3.6.2	ARMADO	5
3.7	- TABLERO	
3.7.1	ARMADO	4
3.8	- DETALLES	2
3.9	- PRUEBA DE CARGA	1

UNIVERSIDAD DE BURGOS
ESCUELA POLITÉCNICA SUPERIOR

AUTORES DEL PROYECTO:
D. Alfonso Cid González
Dña. Raquel Estrada Merino
D. Sergio Agustín Ratón Alomar
Dña. Miriam Sacristán Terradillos

PROYECTO FIN DE CARRERA:

PUENTE EN EL PASO DE BOPAL SOBRE EL RÍO GRANDE DE MATAGALPA (NICARAGUA)

TUTOR DEL PROYECTO:
D. Juan Manual Manso Villalaín

FECHA: Febrero de 2012

TITULO DEL PLANO: INDICE DE PLANOS

ESCALA:

PLANO: 1.1

HOJA: 1 de 1

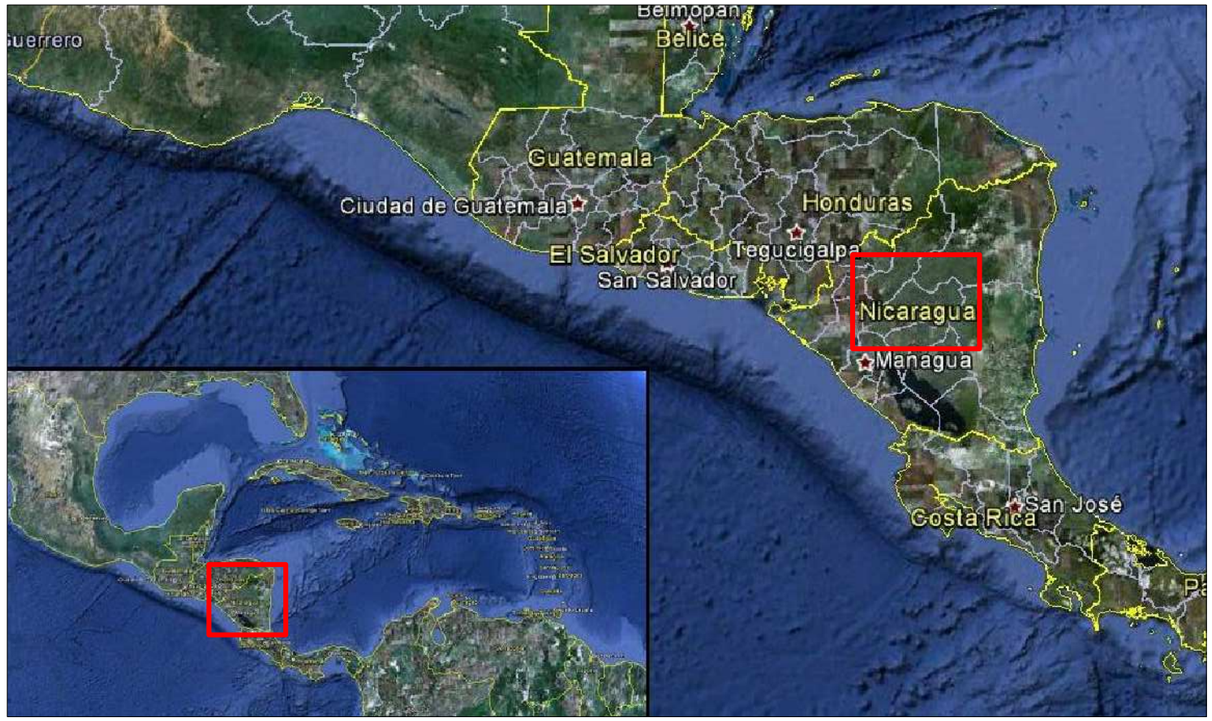

1. Situación geográfica de Nicaragua y del departamento de Matagalpa

3. Situación geográfica de Esquipulas, San Dionisio y la zona del Proyecto

2. Situación geográfica del departamento de Matagalpa y la zona del Proyecto

4. Ubicación de la zona del Proyecto

UNIVERSIDAD DE BURGOS ESCUELA POLITÉCNICA SUPERIOR	***AUTORES DEL PROYECTO:*** D. Alfonso Cid González Dña. Raquel Estrada Merino D. Sergio Agustín Ratón Alomar Dña. Miriam Sacristán Terradillos	***PROYECTO FIN DE CARRERA:*** **PUENTE EN EL PASO DE BOPAL SOBRE EL RÍO GRANDE DE MATAGALPA (NICARAGUA)**	***TUTOR DEL PROYECTO:*** D. Juan Manual Manso Villalaín ***FECHA:*** Febrero de 2012	***TITULO DEL PLANO:*** ENCUADRE GEOGRÁFICO. SITUACIÓN ***ESCALA:*** Sin escala / ***PLANO:*** 1.2 / ***HOJA:*** 1 de 1

ZONA DEL PROYECTO

UNIVERSIDAD DE BURGOS ESCUELA POLITÉCNICA SUPERIOR	***AUTORES DEL PROYECTO:*** D. Alfonso Cid González Dña. Raquel Estrada Merino D. Sergio Agustín Ratón Alomar Dña. Miriam Sacristán Terradillos	***PROYECTO FIN DE CARRERA:*** **PUENTE EN EL PASO DE BOPAL SOBRE EL RÍO GRANDE DE MATAGALPA (NICARAGUA)**	***TUTOR DEL PROYECTO:*** D. Juan Manual Manso Villalaín ***FECHA:*** Febrero de 2012	***TITULO DEL PLANO:*** EMPLAZAMIENTO ***ESCALA:*** 1/50000 (0 500 1000 1500 m) ***PLANO:*** 1.3 ***HOJA:*** 1 de 1

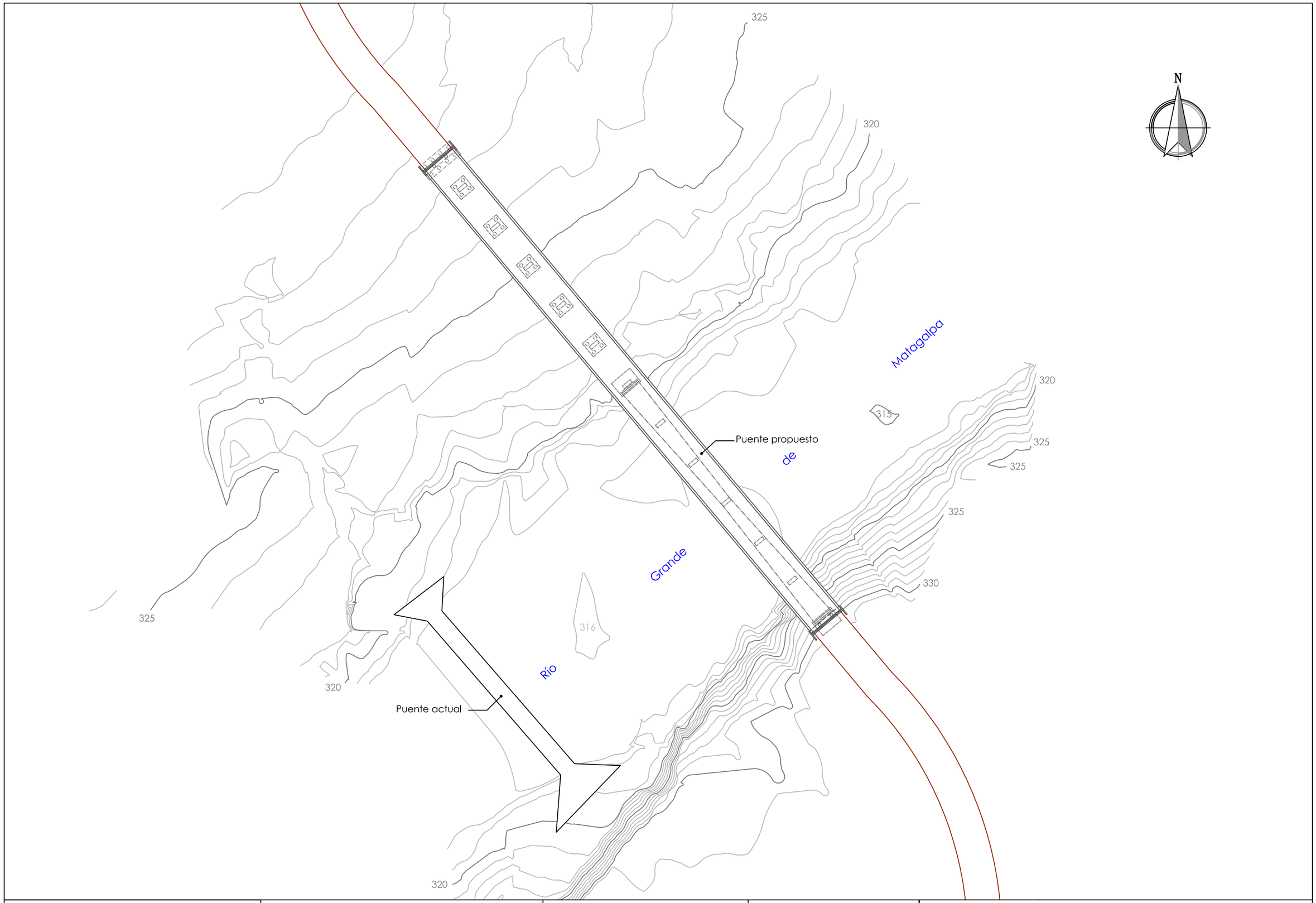

UNIVERSIDAD DE BURGOS ESCUELA POLITÉCNICA SUPERIOR	***AUTORES DEL PROYECTO:*** D. Alfonso Cid González Dña. Raquel Estrada Merino D. Sergio Agustín Ratón Alomar Dña. Miriam Sacristán Terradillos	***PROYECTO FIN DE CARRERA:*** **PUENTE EN EL PASO DE BOPAL SOBRE EL RÍO GRANDE DE MATAGALPA (NICARAGUA)**	***TUTOR DEL PROYECTO:*** D. Juan Manual Manso Villalaín ***FECHA:*** Febrero de 2012	***TITULO DEL PLANO:*** EMPLAZAMIENTO. PLANTA GENERAL ***ESCALA:*** 1/1000 (0 10 20 30 m) ***PLANO:*** 2.1 ***HOJA:*** 1 de 1

Sección A-A'

DESARROLLO LONGITUDINAL EN ALZADO

E: 1/500

Cotas en metros

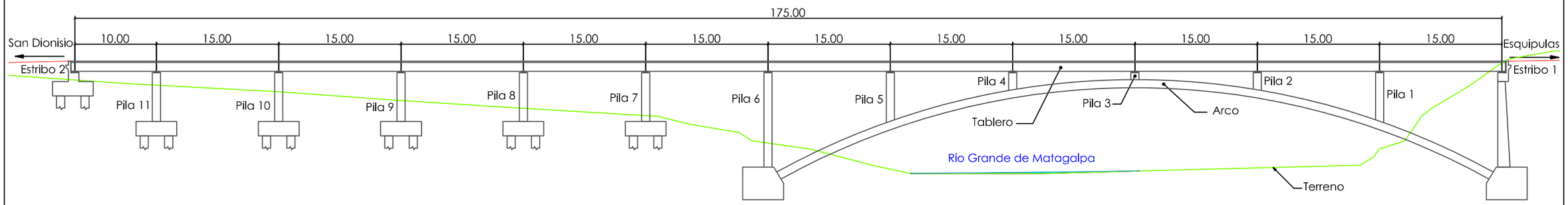

VISTA EN PLANTA

E: 1/1000

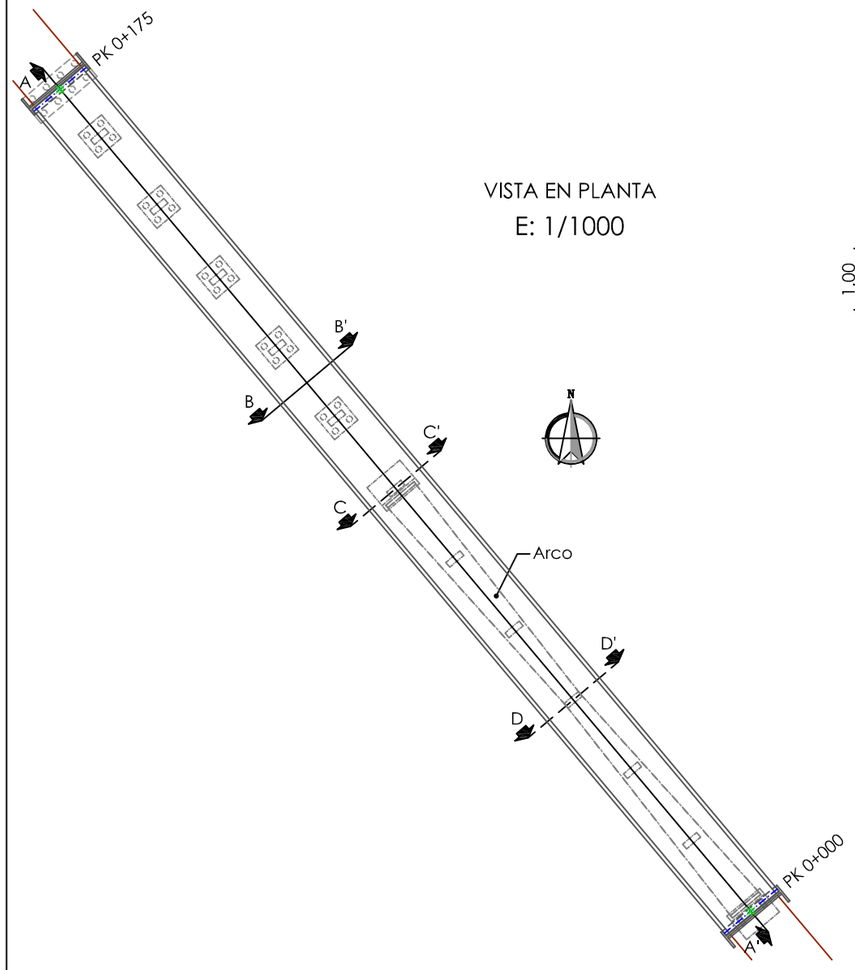

Sección B-B'

SECCIÓN DEL TABLERO

E: 1/100

Cotas en metros

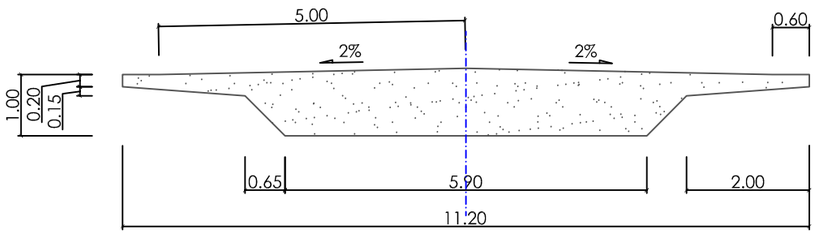

Sección transversal de losa aligerada exterior de canto constante

SECCIÓN DE PILAS

E: 1/100

Cotas en metros

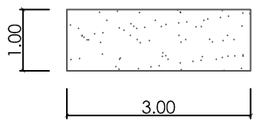

Sección C-C'

SECCIÓN DEL ARCO

E: 1/100

Cotas en metros

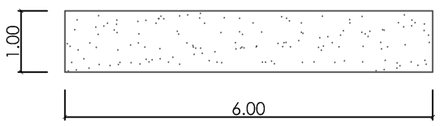

Sección transversal del arco en el arranque

Sección D-D'

SECCIÓN DEL ARCO

E: 1/100

Cotas en metros

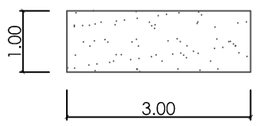

Sección transversal del arco en la clave

UNIVERSIDAD DE BURGOS
ESCUELA POLITÉCNICA SUPERIOR

AUTORES DEL PROYECTO:
D. Alfonso Cid González
Dña. Raquel Estrada Merino
D. Sergio Agustín Ratón Alomar
Dña. Miriam Sacristán Terradillos

PROYECTO FIN DE CARRERA:

PUENTE EN EL PASO DE BOPAL SOBRE EL RÍO GRANDE DE MATAGALPA (NICARAGUA)

TUTOR DEL PROYECTO:
D. Juan Manual Manso Villalaín

FECHA: Febrero de 2012

TITULO DEL PLANO: DEFINICIÓN GENERAL. PUENTE ARCO

ESCALA: Varias

PLANO: 3.1.1

HOJA: 1 de 1

SECCIONES TRANSVERSALES DEL PUENTE ARCO

Sección transversal del arco en pila 3

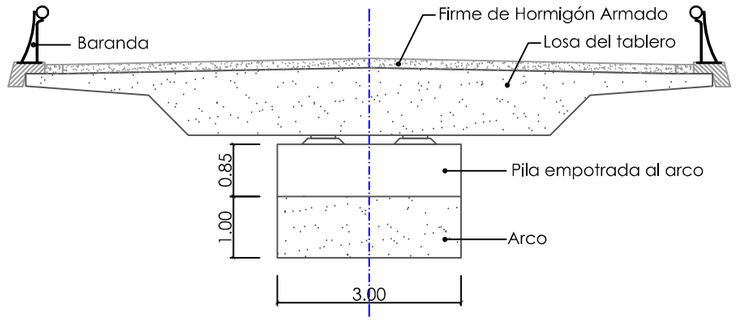

Sección transversal del arco sin pila en el centro del vano 3 y 4

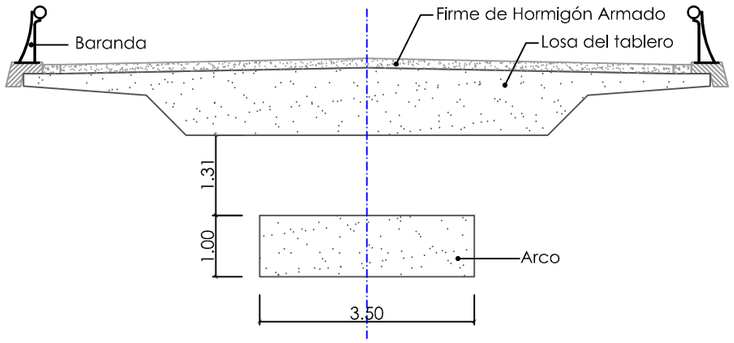

Sección transversal del arco en pila 2 y 4

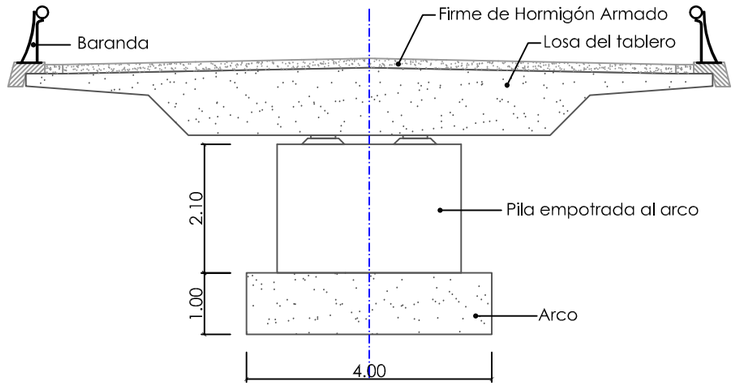

Sección transversal del arco sin pila en el centro del vano 2 y 5

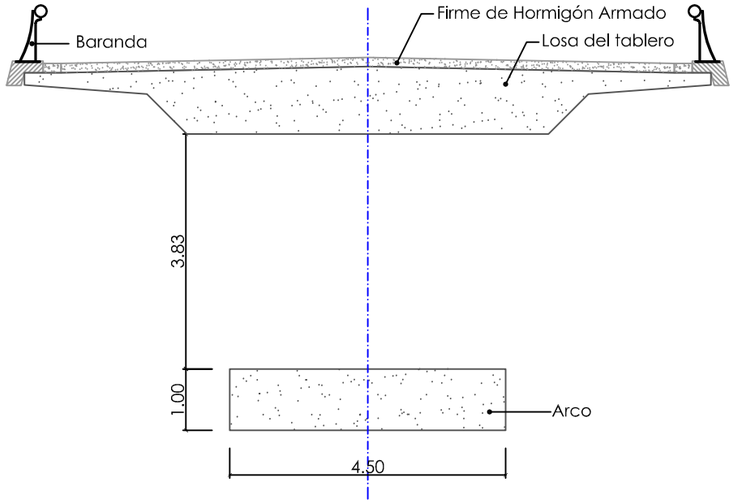

Sección transversal del arco en pila 1 y 5

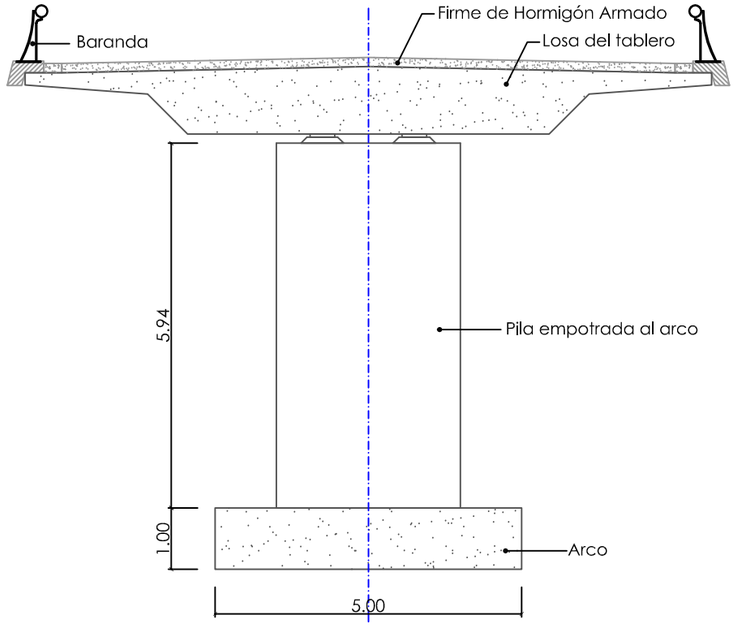

Sección transversal del arco sin pila en el centro del vano 1 y 6

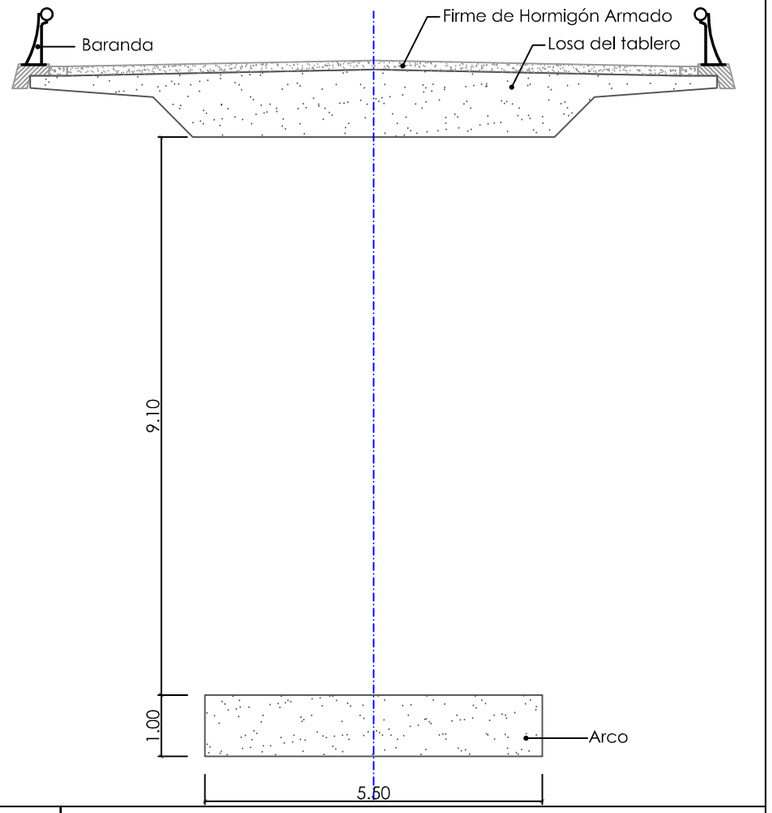

UNIVERSIDAD DE BURGOS ESCUELA POLITÉCNICA SUPERIOR	***AUTORES DEL PROYECTO:*** D. Alfonso Cid González Dña. Raquel Estrada Merino D. Sergio Agustín Ratón Alomar Dña. Miriam Sacristán Terradillos	***PROYECTO FIN DE CARRERA:*** **PUENTE EN EL PASO DE BOPAL SOBRE EL RÍO GRANDE DE MATAGALPA (NICARAGUA)**	***TUTOR DEL PROYECTO:*** D. Juan Manual Manso Villalaín ***FECHA:*** Febrero de 2012	***TITULO DEL PLANO:*** DEFINICIÓN GENERAL. ARCO ***ESCALA:*** 1/100 (0 1 2 3 m) ***PLANO:*** 3.1.2 ***HOJA:*** 2 de 2

VISTA EN PLANTA

E: 1/500

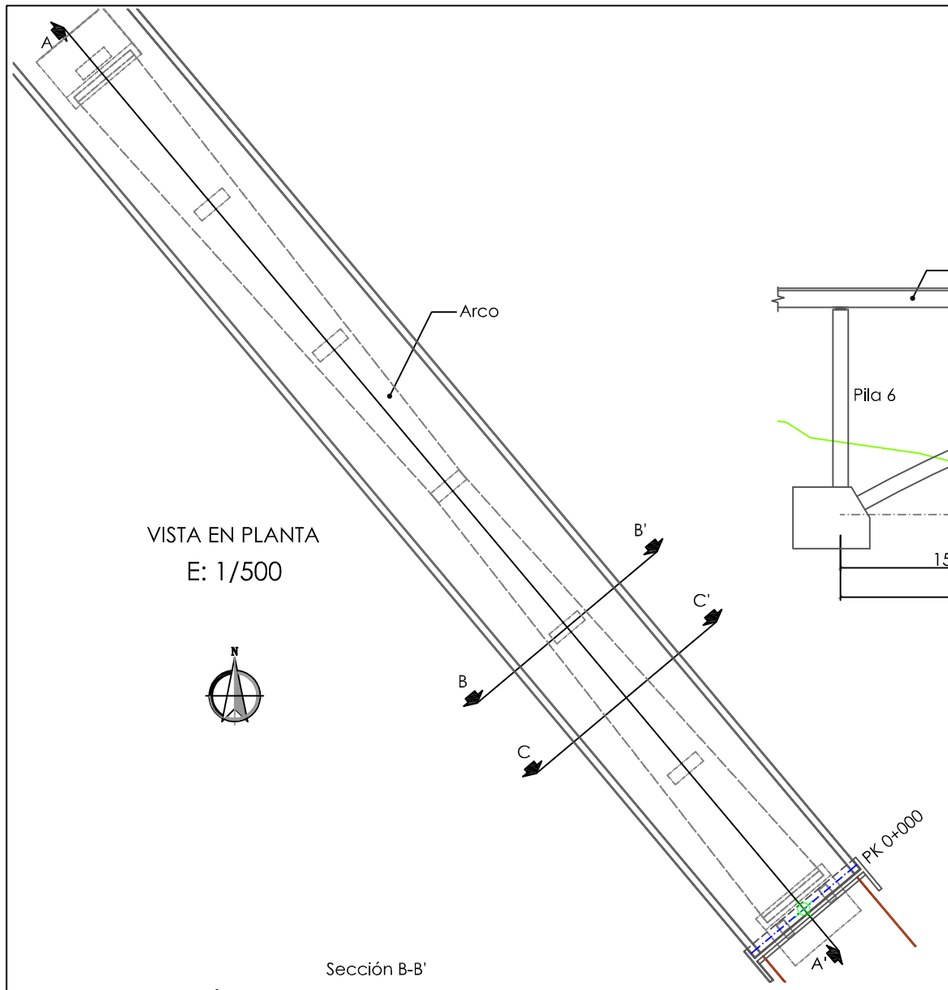

Sección A-A'

DEFINICIÓN DEL ARCO

E: 1/400

Cotas en metros

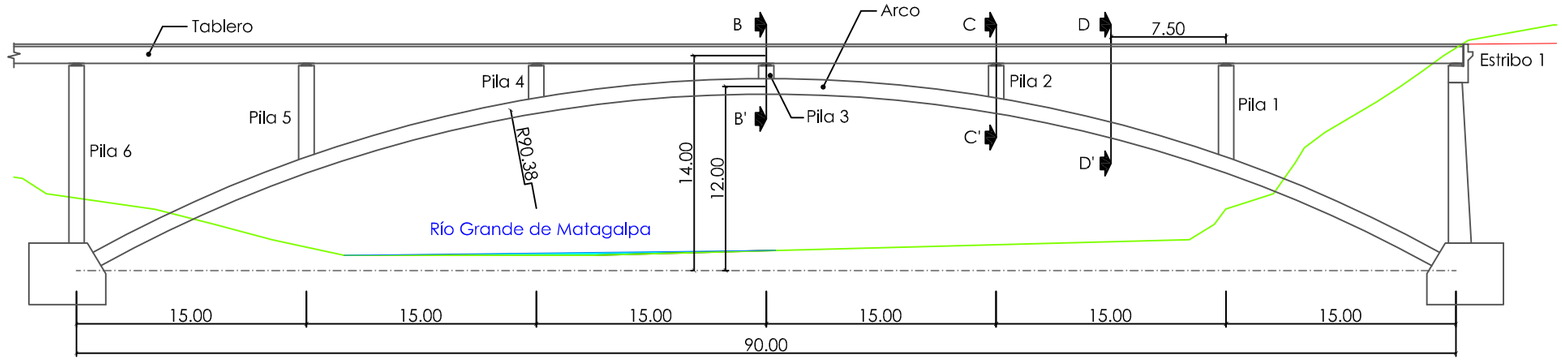

Sección B-B'

SECCIÓN TRANSVERSAL DEL ARCO CON PILA

E: 1/100

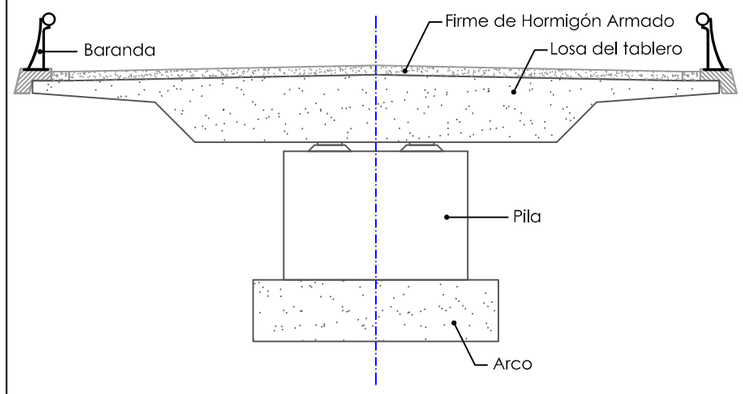

Pila empotrada al arco

Sección C-C'

SECCIÓN TRANSVERSAL DEL ARCO SIN PILA

E: 1/100

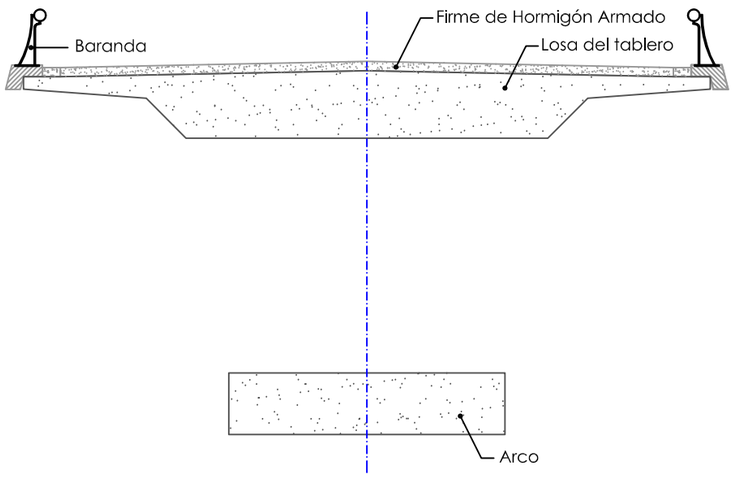

SECCIONES DEL ARCO

E: 1/100

Cotas en metros

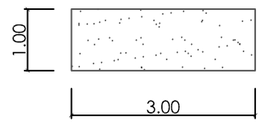

Sección transversal del arco en pila 3

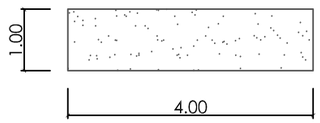

Sección transversal del arco en pila 2 y 4

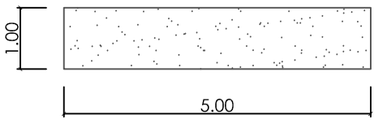

Sección transversal del arco en pila 1 y 5

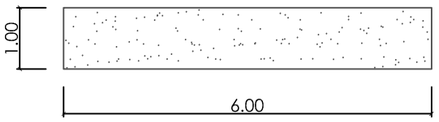

Sección transversal del arco en pila 6 y estribo 1

UNIVERSIDAD DE BURGOS ESCUELA POLITÉCNICA SUPERIOR	***AUTORES DEL PROYECTO:*** D. Alfonso Cid González Dña. Raquel Estrada Merino D. Sergio Agustín Ratón Alomar Dña. Miriam Sacristán Terradillos	***PROYECTO FIN DE CARRERA:*** **PUENTE EN EL PASO DE BOPAL SOBRE EL RÍO GRANDE DE MATAGALPA (NICARAGUA)**	***TUTOR DEL PROYECTO:*** D. Juan Manual Manso Villalaín ***FECHA:*** Febrero de 2012	***TITULO DEL PLANO:*** DEFINICIÓN GENERAL. ARCO ***ESCALA:*** Varias / ***PLANO:*** 3.1.2 / ***HOJA:*** 1 de 2

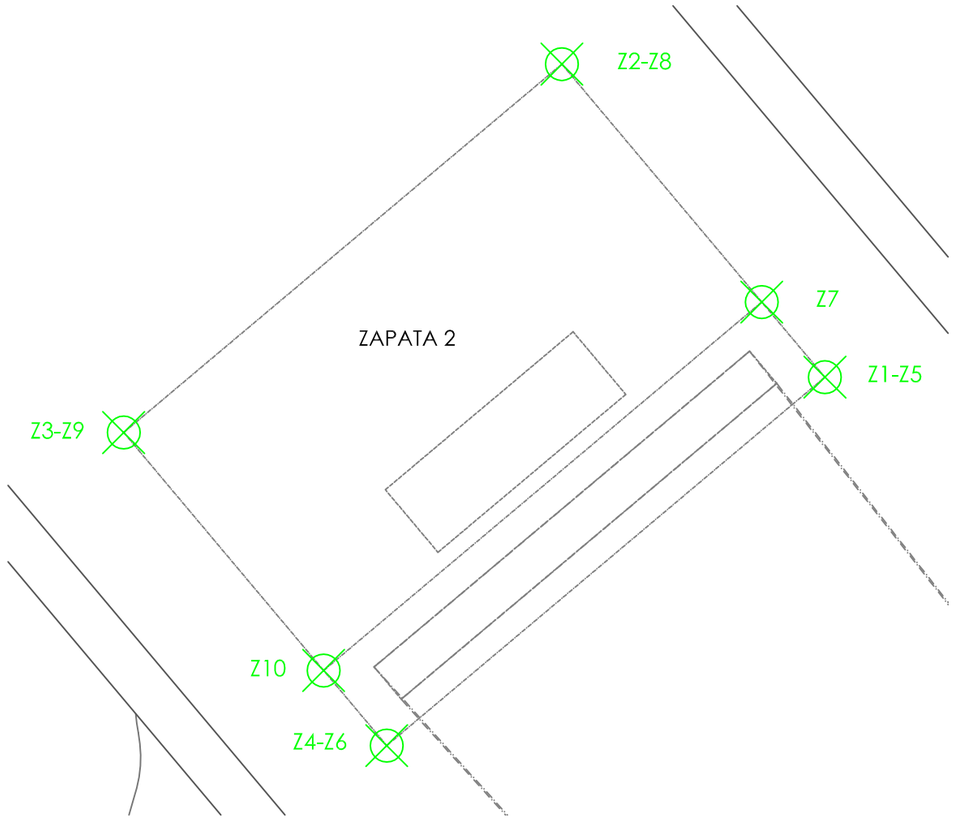

ZAPATA 1	X UTM	Y UTM	Z msnm
1	628706,872	1405872,769	312,786
2	628710,089	1405868,941	312,786
3	628704,731	1405864,437	312,786
4	628709,446	1405869,707	312,786
5	628706,872	1405872,769	314,786
6	628709,446	1405869,707	314,786
7	628707,644	1405871,850	316,784
8	628710,089	1405868,941	316,784
9	628704,731	1405864,437	316,784
10	628702,286	1405867,346	316,784

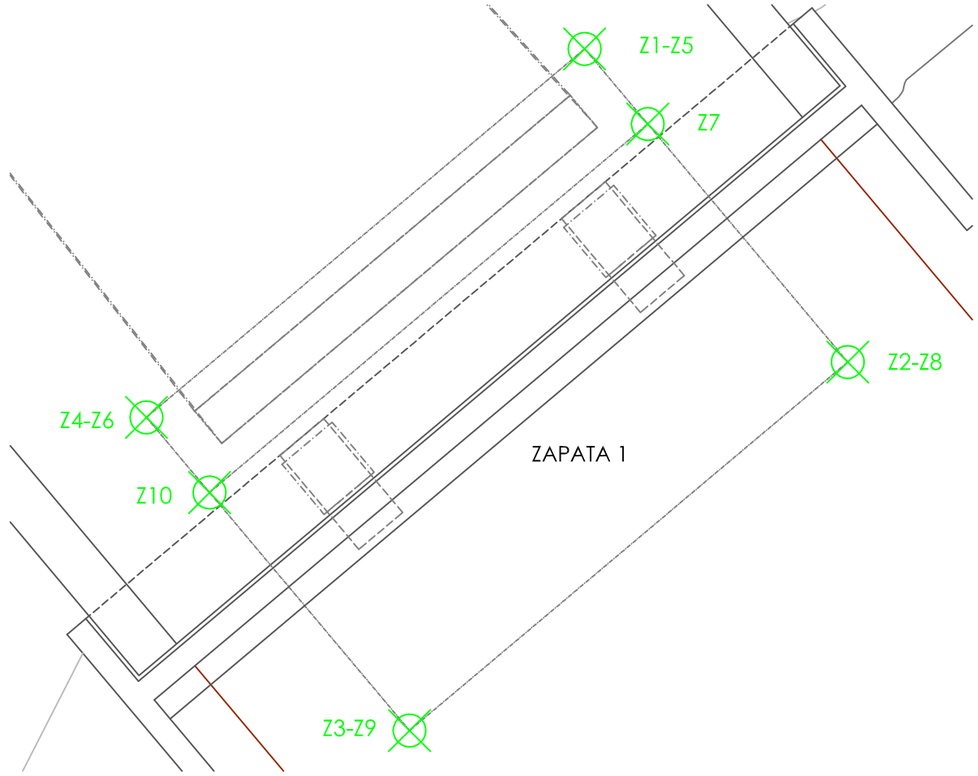

ZAPATA 2	X UTM	Y UTM	Z msnm
1	628651,416	1405938,746	312,786
2	628648,202	1405942,573	312,786
3	628642,844	1405938,069	312,786
4	628646,058	1405934,242	312,786
5	628651,416	1405938,746	314,786
6	628646,058	1405934,242	314,786
7	628650,644	1405939,664	316,784
8	628648,202	1405942,573	316,784
9	628642,844	1405938,069	316,784
10	628645,286	1405935,160	316,784

UNIVERSIDAD DE BURGOS
ESCUELA POLITÉCNICA SUPERIOR

AUTORES DEL PROYECTO:
D. Alfonso Cid González
Dña. Raquel Estrada Merino
D. Sergio Agustín Ratón Alomar
Dña. Miriam Sacristán Terradillos

PROYECTO FIN DE CARRERA:
PUENTE EN EL PASO DE BOPAL SOBRE EL RÍO GRANDE DE MATAGALPA (NICARAGUA)

TUTOR DEL PROYECTO:
D. Juan Manual Manso Villalaín

FECHA: Febrero de 2012

TITULO DEL PLANO: REPLANTEO . ZAPATAS 1, 2

ESCALA: 1/75 0 0.6 1.2 1.8 2.4 m

PLANO: 3.2.1

HOJA: 1 de 1

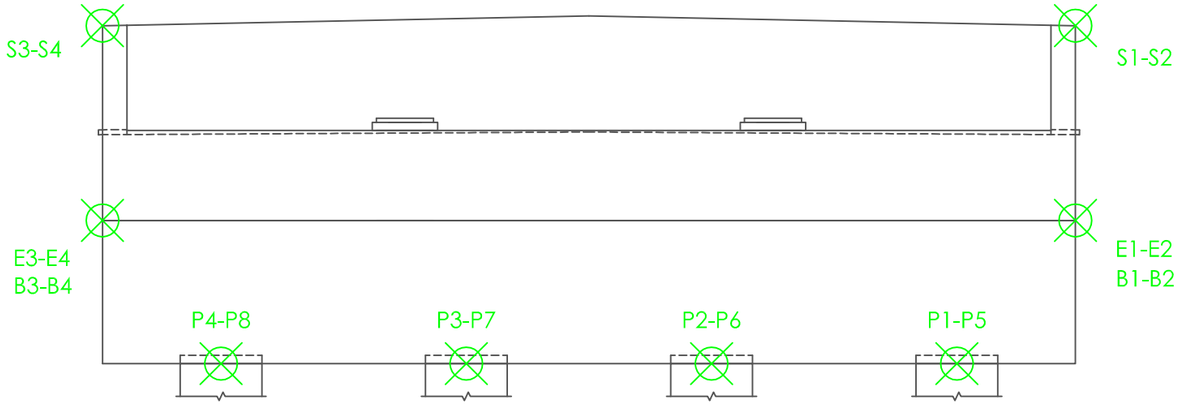

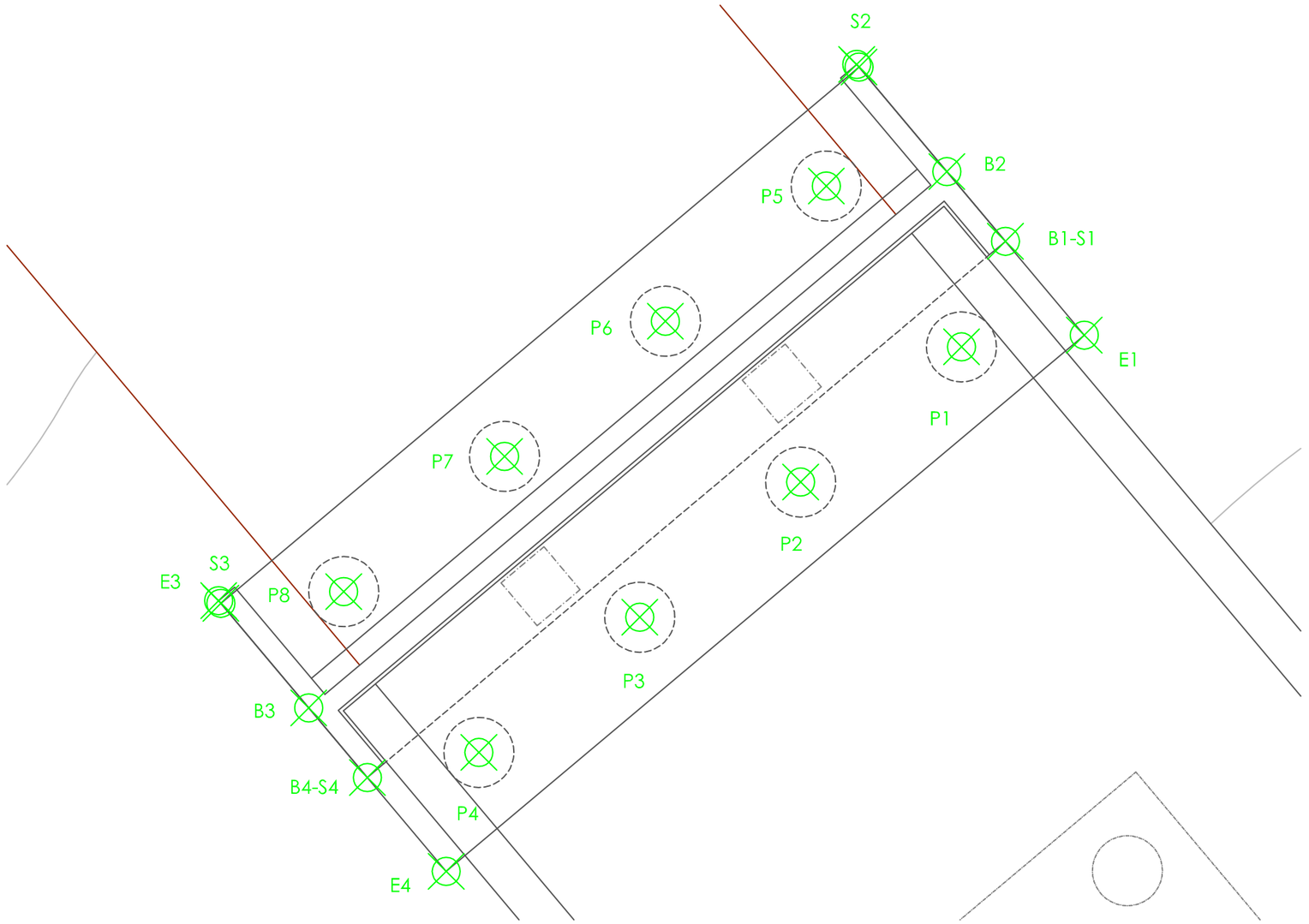

PILOTES E2	X UTM	Y UTM	Z msnm
1	628597,068	1406004,959	325,500
2	628594,771	1406003,029	325,500
3	628592,475	1406001,098	325,500
4	628590,178	1405999,168	325,500
5	628595,137	1406007,256	325,500
6	628592,841	1406005,325	325,500
7	628590,544	1406003,395	325,500
8	628588,248	1406001,465	325,500

ENCEPADO E2	X UTM	Y UTM	Z msnm
1	628598,821	1406005,127	327,250
2	628595,604	1406008,954	327,250
3	628586,494	1406001,297	327,250
4	628589,712	1405997,470	327,250

BASE E2	X UTM	Y UTM	Z msnm
1	628597,695	1406006,466	327,250
2	628596,859	1406007,461	327,250
3	628587,749	1405999,804	327,250
4	628588,586	1405998,809	327,250

SUPERIOR E2	X UTM	Y UTM	Z msnm
1	628597,695	1406006,466	329,750
2	628595,572	1406008,992	329,750
3	628586,462	1406001,335	329,750
4	628588,586	1405998,809	329,750

UNIVERSIDAD DE BURGOS
ESCUELA POLITÉCNICA SUPERIOR

AUTORES DEL PROYECTO:
D. Alfonso Cid González
Dña. Raquel Estrada Merino
D. Sergio Agustín Ratón Alomar
Dña. Miriam Sacristán Terradillos

PROYECTO FIN DE CARRERA:
PUENTE EN EL PASO DE BOPAL SOBRE EL RÍO GRANDE DE MATAGALPA (NICARAGUA)

TUTOR DEL PROYECTO:
D. Juan Manual Manso Villalaín

FECHA: Febrero de 2012

TITULO DEL PLANO: REPLANTEO. ESTRIBO 2

ESCALA: 1/75 0 0.6 1.2 1.8 2.4 m

PLANO: 3.2.2

HOJA: 2 de 2

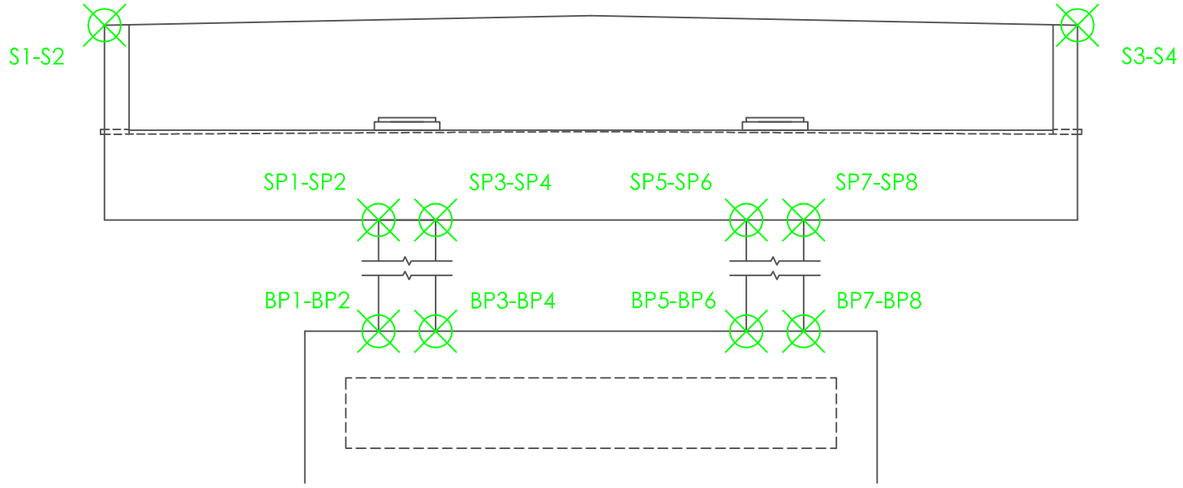

BASE PILAS E1	X UTM	Y UTM	Z msnm
1	628707,126	1405871,145	316,784
2	628708,091	1405869,997	316,784
3	628707,556	1405869,547	316,784
4	628706,590	1405870,695	316,784
5	628703,682	1405868,250	316,784
6	628704,647	1405867,102	316,784
7	628704,111	1405866,651	316,784
8	628703,146	1405867,800	316,784

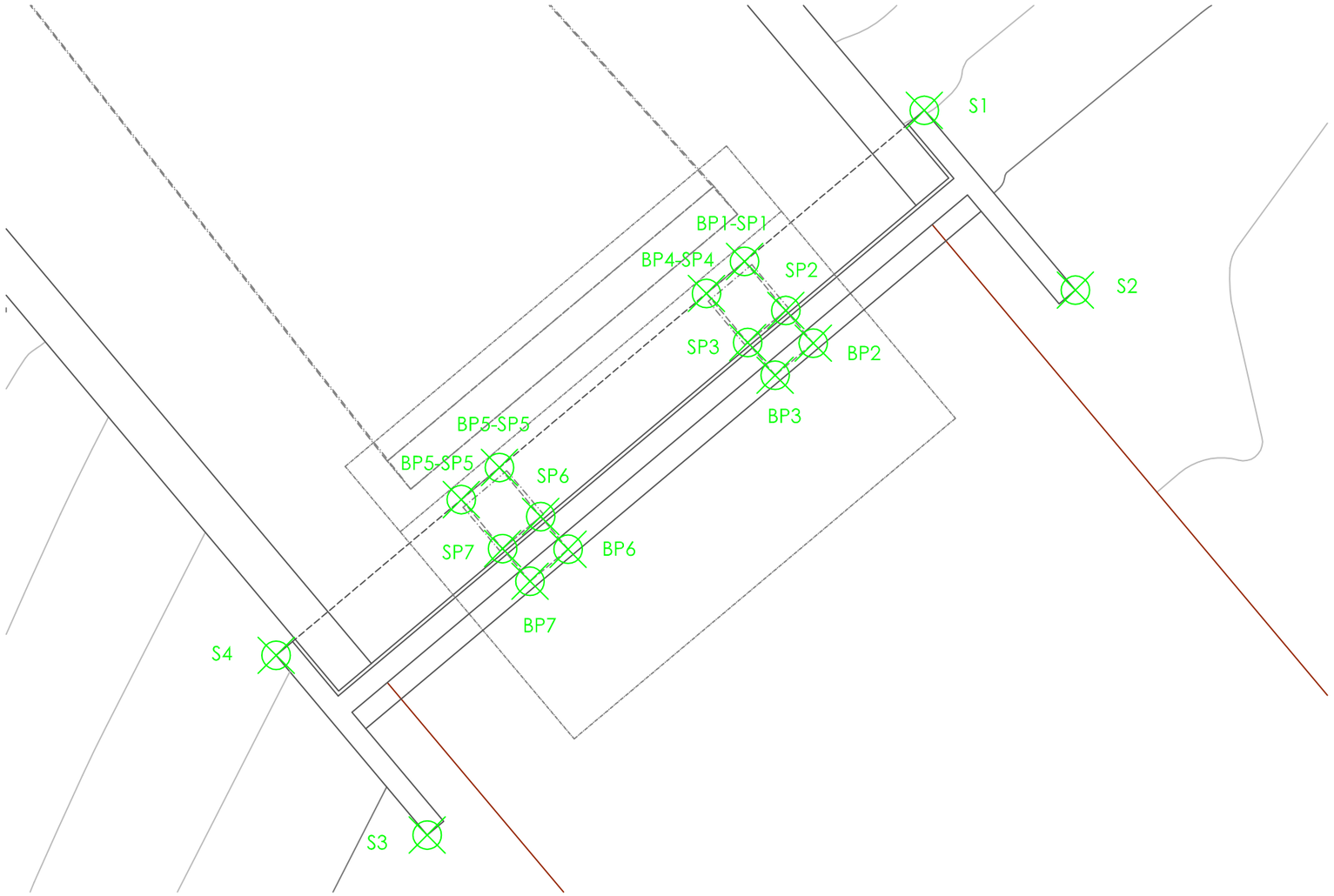

SUPERIOR PILAS E1	X UTM	Y UTM	Z msnm
1	628707,126	1405871,145	327,250
2	628707,705	1405870,457	327,250
3	628707,170	1405870,006	327,250
4	628706,590	1405870,695	327,250
5	628703,682	1405868,250	327,250
6	628704,261	1405867,561	327,250
7	628703,725	1405867,111	327,250
8	628703,146	1405867,800	327,250

SUPERIOR E1	X UTM	Y UTM	Z msnm
1	628709,652	1405873,269	329,750
2	628711,776	1405870,743	329,750
3	628702,666	1405863,086	329,750
4	628700,543	1405865,612	329,750

UNIVERSIDAD DE BURGOS
ESCUELA POLITÉCNICA SUPERIOR

AUTORES DEL PROYECTO:
D. Alfonso Cid González
Dña. Raquel Estrada Merino
D. Sergio Agustín Ratón Alomar
Dña. Miriam Sacristán Terradillos

PROYECTO FIN DE CARRERA:
PUENTE EN EL PASO DE BOPAL SOBRE EL RÍO GRANDE DE MATAGALPA (NICARAGUA)

TUTOR DEL PROYECTO:
D. Juan Manual Manso Villalaín

FECHA: Febrero de 2012

TITULO DEL PLANO: REPLANTEO. ESTRIBO 1

ESCALA: 1/75 0 0.6 1.2 1.8 2.4 m

PLANO: 3.2.2

HOJA: 1 de 2

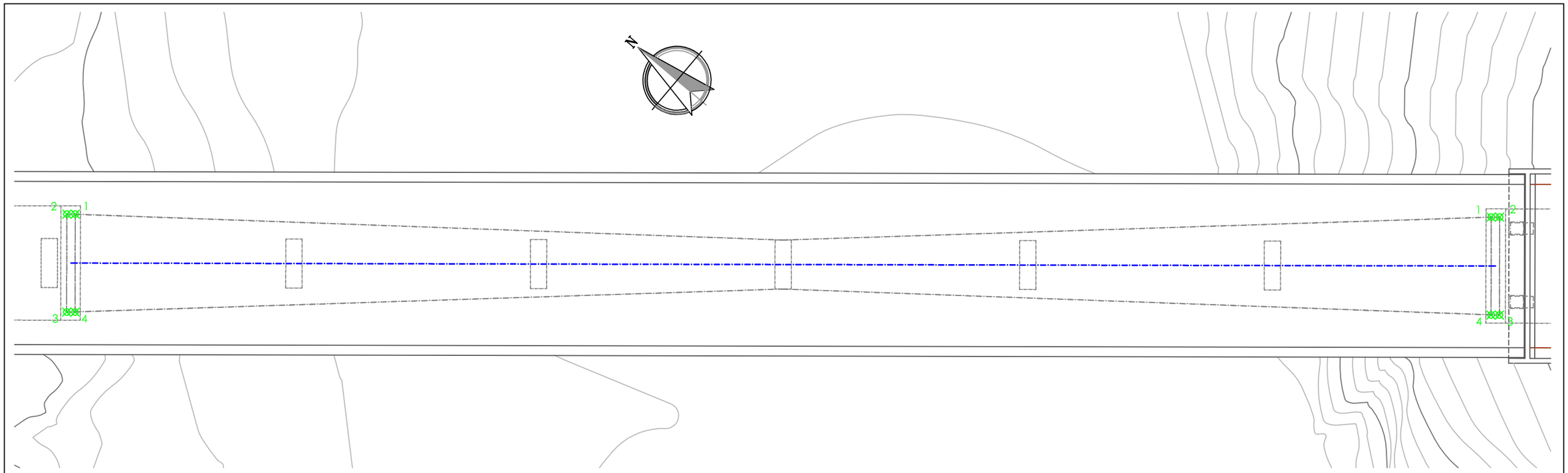

SECCIÓN	PUNTO	X UTM	Y UTM	Z msnm	SECCIÓN	PUNTO	X UTM	Y UTM	Z msnm	SECCIÓN	PUNTO	X UTM	Y UTM	Z msnm	SECCIÓN	PUNTO	X UTM	Y UTM	Z msnm
CONTACTO ARCO-ESTRIBO 1	1	628706,710	1405872,185	315,321	8	1	628689,665	1405891,087	324,012	16	1	628673,91	1405909,20	326,450	24	1	628660,95	1405925,73	322,348
	2	628707,041	1405871,791	316,179		2	628689,665	1405891,087	325,040		2	628673,91	1405909,20	327,450		2	628660,95	1405925,73	323,396
	3	628702,448	1405867,930	316,179		3	628686,428	1405888,366	325,040		3	628671,30	1405907,00	327,450		3	628657,24	1405922,62	323,396
	4	628702,117	1405868,324	315,321		4	628686,428	1405888,366	324,012		4	628671,30	1405907,00	326,450		4	628657,24	1405922,62	322,348
1	1	628705,735	1405873,242	316,083	9	1	628687,657	1405893,317	324,679	17	1	628672,06	1405911,56	326,299	25	1	628659,09	1405928,09	321,345
	2	628705,735	1405873,242	317,212		2	628687,657	1405893,317	325,699		2	628672,06	1405911,56	327,302		2	628659,09	1405928,09	322,405
	3	628701,243	1405869,466	317,212		3	628684,576	1405890,728	325,699		3	628669,29	1405909,23	327,302		3	628655,23	1405924,85	322,405
	4	628701,243	1405869,466	316,083		4	628684,576	1405890,728	324,679		4	628669,29	1405909,23	326,299		4	628655,23	1405924,85	321,345
2	1	628703,726	1405875,473	317,597	10	1	628685,652	1405895,551	325,239	18	1	628670,21	1405913,92	326,048	26	1	628657,24	1405930,46	320,222
	2	628703,726	1405875,473	318,706		2	628685,652	1405895,551	326,253		2	628670,21	1405913,92	327,053		2	628657,24	1405930,46	321,297
	3	628699,391	1405871,829	318,706		3	628682,724	1405893,090	326,253		3	628667,28	1405911,46	327,053		3	628653,22	1405927,08	321,297
	4	628699,391	1405871,829	317,597		4	628682,724	1405893,090	325,239		4	628667,28	1405911,46	326,048		4	628653,22	1405927,08	320,222
3	1	628701,718	1405877,703	318,975	11	1	628683,639	1405897,779	325,695	19	1	628668,35	1405916,28	325,695	27	1	628655,39	1405932,82	318,975
	2	628701,718	1405877,703	320,065		2	628683,639	1405897,779	326,704		2	628668,35	1405916,28	326,704		2	628655,39	1405932,82	320,065
	3	628697,539	1405874,191	320,065		3	628680,872	1405895,453	326,704		3	628665,27	1405913,69	326,704		3	628651,21	1405929,31	320,065
	4	628697,539	1405874,191	318,975		4	628680,872	1405895,453	325,695		4	628665,27	1405913,69	325,695		4	628651,21	1405929,31	318,975
4	1	628699,709	1405879,934	320,222	12	1	628681,631	1405900,009	326,048	20	1	628666,50	1405918,64	325,239	28	1	628653,54	1405935,18	317,597
	2	628699,709	1405879,934	321,297		2	628681,631	1405900,009	327,053		2	628666,50	1405918,64	326,253		2	628653,54	1405935,18	318,706
	3	628695,687	1405876,553	321,297		3	628679,020	1405897,815	327,053		3	628663,26	1405915,92	326,253		3	628649,20	1405931,54	318,706
	4	628695,687	1405876,553	320,222		4	628679,020	1405897,815	326,048		4	628663,26	1405915,92	325,239		4	628649,20	1405931,54	317,597
5	1	628697,700	1405882,164	321,345	13	1	628679,622	1405902,240	326,299	21	1	628664,65	1405921,01	324,679	29	1	628651,69	1405937,54	316,083
	2	628697,700	1405882,164	322,405		2	628679,622	1405902,240	327,302		2	628664,65	1405921,01	325,699		2	628651,69	1405937,54	317,212
	3	628693,836	1405878,916	322,405		3	628677,169	1405900,178	327,302		3	628661,26	1405918,15	325,699		3	628647,19	1405933,77	317,212
	4	628693,836	1405878,916	321,345		4	628677,169	1405900,178	326,299		4	628661,26	1405918,15	324,679		4	628647,19	1405933,77	316,083
6	1	628695,692	1405884,395	322,348	14	1	628677,613	1405904,470	326,450	22	1	628664,65	1405921,01	324,012	CONTACTO ARCO-ZAPATA PILA 6	1	628650,81	1405938,69	315,321
	2	628695,692	1405884,395	323,396		2	628677,613	1405904,470	327,450		2	628664,65	1405921,01	325,040		2	628650,48	1405939,08	316,179
	3	628691,984	1405881,278	323,396		3	628675,317	1405902,540	327,450		3	628661,26	1405918,15	325,040		3	628645,89	1405935,22	316,179
	4	628691,984	1405881,278	322,348		4	628675,317	1405902,540	326,450		4	628661,26	1405918,15	324,012		4	628646,22	1405934,83	315,321
7	1	628693,683	1405886,626	323,236	15	1	628675,761	1405906,833	326,500	23	1	628662,80	1405923,37	323,236					
	2	628693,683	1405886,626	324,274		2	628675,761	1405906,833	327,500		2	628662,80	1405923,37	324,274					
	3	628690,132	1405883,641	324,274		3	628673,308	1405904,771	327,500		3	628659,25	1405920,38	324,274					
	4	628690,132	1405883,641	323,236		4	628673,308	1405904,771	326,500		4	628659,25	1405920,38	323,236					

Secciones tomadas cada 3 metros .

UNIVERSIDAD DE BURGOS
ESCUELA POLITÉCNICA SUPERIOR

AUTORES DEL PROYECTO:
D. Alfonso Cid González
Dña. Raquel Estrada Merino
D. Sergio Agustín Ratón Alomar
Dña. Miriam Sacristán Terradillos

PROYECTO FIN DE CARRERA:

PUENTE EN EL PASO DE BOPAL SOBRE EL RÍO GRANDE DE MATAGALPA (NICARAGUA)

TUTOR DEL PROYECTO:
D. Juan Manual Manso Villalaín

FECHA: Febrero de 2012

TITULO DEL PLANO: REPLANTEO . ARCO

ESCALA: 1/250 (0 2,5 5,0 7,5 m)

PLANO: 3.2.3

HOJA: 1 de 1

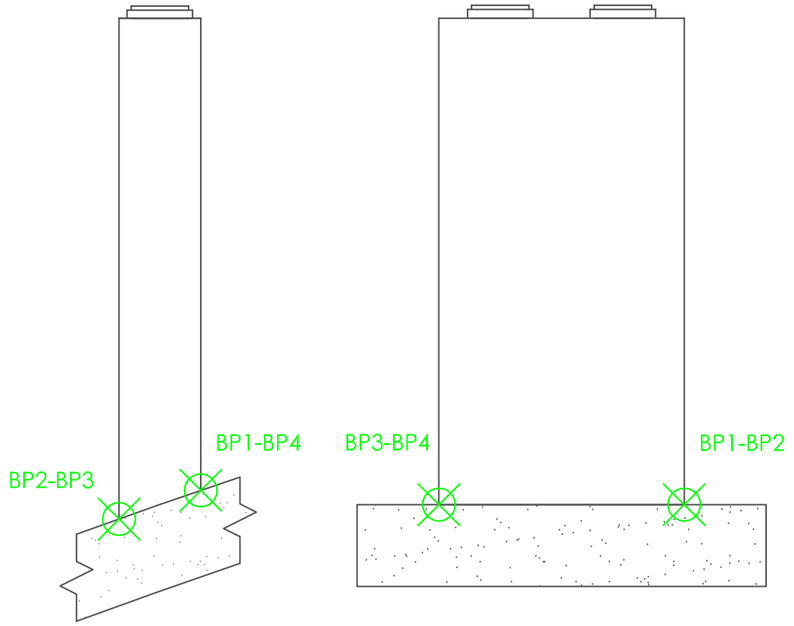

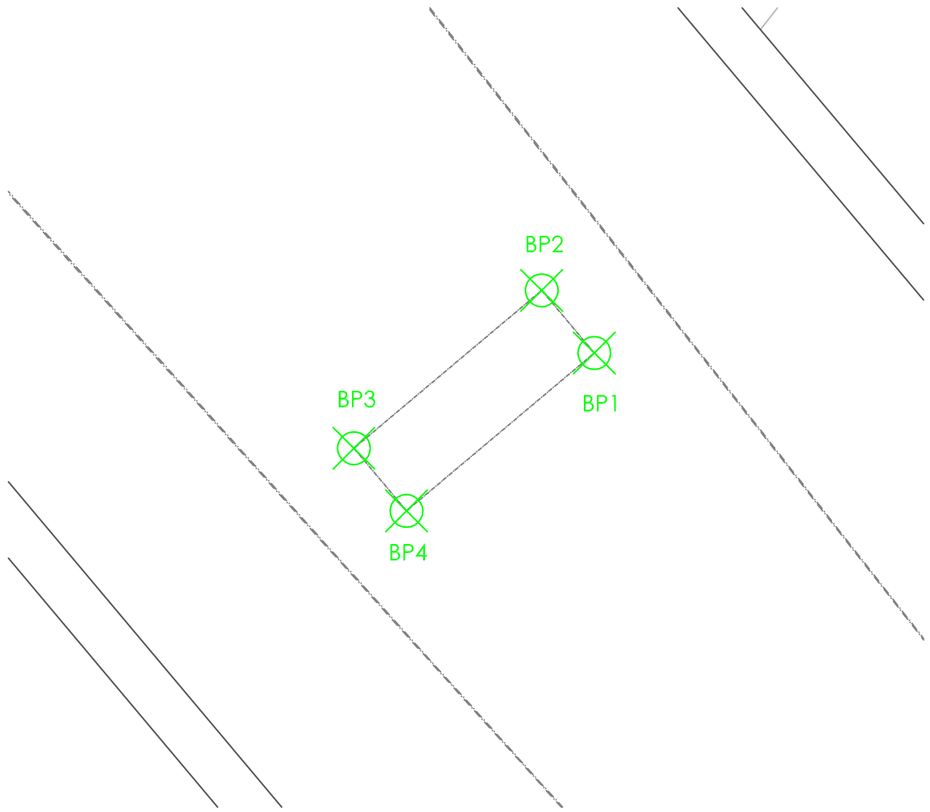

BASE PILAS SOBRE ARCO	X UTM	Y UTM	Z (msnm)
1-1	628697,238	1405881,123	322,229
1-2	628696,594	1405881,888	322,579
1-3	628694,298	1405879,958	322,579
1-4	628694,941	1405879,192	322,229
2-1	628687,586	1405892,605	326,168
2-2	628686,943	1405893,371	326,336
2-3	628684,646	1405891,440	326,336
2-4	628685,290	1405890,675	326,168
3-1	628677,935	1405904,088	327,499
3-2	628677,291	1405904,853	327,499
3-3	628674,995	1405902,923	327,499
3-4	628675,638	1405902,157	327,499
4-1	628668,283	1405915,570	326,336
4-2	628667,640	1405916,336	326,168
4-3	628665,343	1405914,405	326,168
4-4	628665,987	1405913,640	326,336
5-1	628658,632	1405927,053	322,579
5-2	628657,988	1405927,818	322,229
5-3	628655,692	1405925,888	322,229
5-4	628656,335	1405925,122	322,579
6-1	628648,980	1405938,535	316,785
6-2	628648,337	1405939,301	316,785
6-3	628646,040	1405937,370	316,785
6-4	628646,684	1405936,605	316,785

El primer número equivale a la pila.

El segundo número equivale al punto de replanteo.

UNIVERSIDAD DE BURGOS
ESCUELA POLITÉCNICA SUPERIOR

AUTORES DEL PROYECTO:
D. Alfonso Cid González
Dña. Raquel Estrada Merino
D. Sergio Agustín Ratón Alomar
Dña. Miriam Sacristán Terradillos

PROYECTO FIN DE CARRERA:

PUENTE EN EL PASO DE BOPAL SOBRE EL RÍO GRANDE DE MATAGALPA (NICARAGUA)

TUTOR DEL PROYECTO:
D. Juan Manual Manso Villalaín

FECHA: Febrero de 2012

TITULO DEL PLANO: REPLANTEO . PILAS 1, 2, 3, 4, 5, 6

ESCALA: 1/75 0 0.6 1.2 1.8 2.4 m

PLANO: 3.2.4

HOJA: 1 de 2

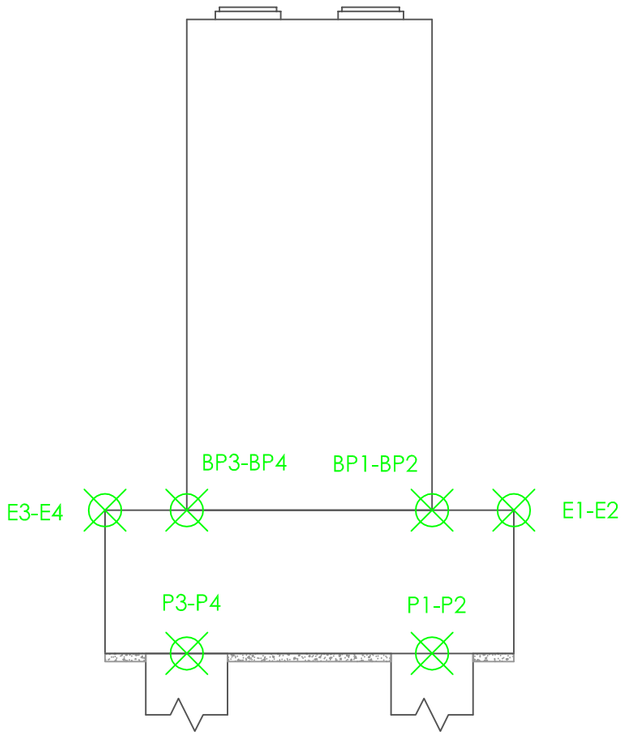

El primer número equivale a la pila.

El segundo número equivale al punto de replanteo.

PILOTES	X UTM	Y UTM	Z msnm
7-1	628639,972	1405949,252	320,600
7-2	628638,042	1405951,549	320,600
7-3	628635,746	1405949,618	320,600
7-4	628637,676	1405947,322	320,600
8-1	628630,321	1405960,735	320,600
8-2	628628,391	1405963,031	320,600
8-3	628626,094	1405961,101	320,600
8-4	628628,024	1405958,804	320,600
9-1	628620,669	1405972,217	320,600
9-2	628618,739	1405974,514	320,600
9-3	628616,443	1405972,584	320,600
9-4	628618,373	1405970,287	320,600
10-1	628611,018	1405983,700	320,600
10-2	628609,088	1405985,996	320,600
10-3	628606,791	1405984,066	320,600
10-4	628608,721	1405981,770	320,600
11-1	628601,366	1405995,182	320,600
11-2	628599,436	1405997,479	320,600
11-3	628597,140	1405995,549	320,600
11-4	628599,070	1405993,252	320,600

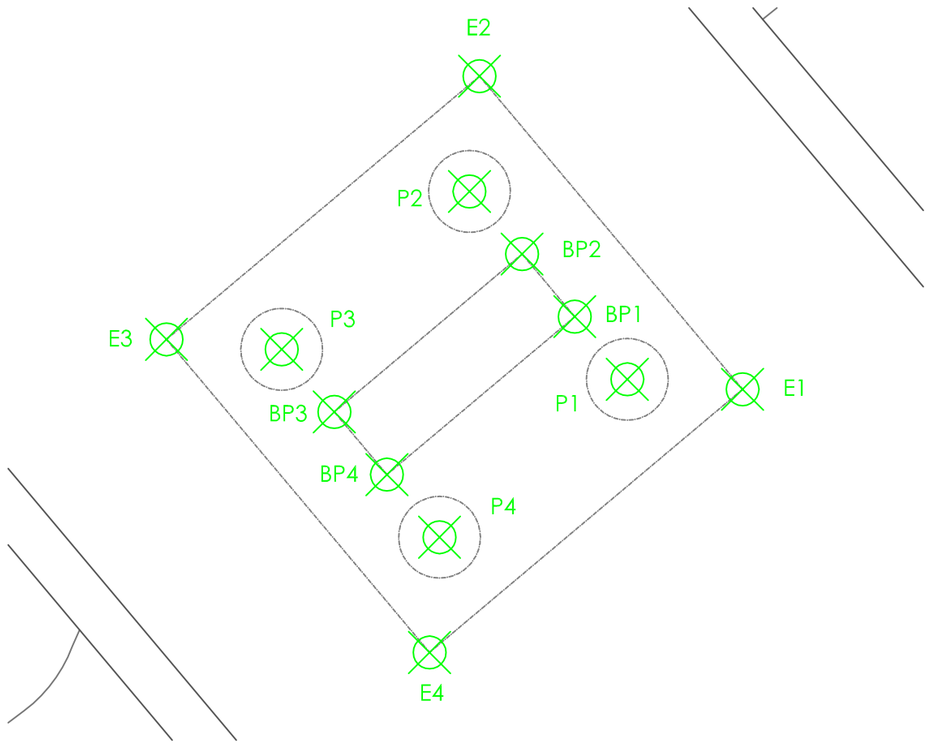

ENCEPADOS	X UTM	Y UTM	Z msnm
7-1	628641,381	1405949,130	322,350
7-2	628638,164	1405952,958	322,350
7-3	628634,337	1405949,741	322,350
7-4	628637,554	1405945,913	322,350
8-1	628631,730	1405960,613	322,350
8-2	628628,513	1405964,440	322,350
8-3	628624,685	1405961,223	322,350
8-4	628627,902	1405957,396	322,350
9-1	628622,078	1405972,095	322,350
9-2	628618,861	1405975,923	322,350
9-3	628615,034	1405972,706	322,350
9-4	628618,251	1405968,878	322,350
10-1	628612,427	1405983,578	322,350
10-2	628609,210	1405987,405	322,350
10-3	628605,382	1405984,188	322,350
10-4	628608,599	1405980,361	322,350
11-1	628602,775	1405995,060	322,350
11-2	628599,558	1405998,888	322,350
11-3	628595,731	1405995,671	322,350
11-4	628598,948	1405991,843	322,350

BASES PILAS	X UTM	Y UTM	Z msnm
7-1	628639,329	1405950,018	322,350
7-2	628638,685	1405950,783	322,350
7-3	628636,389	1405948,853	322,350
7-4	628637,032	1405948,087	322,350
8-1	628629,677	1405961,500	322,350
8-2	628629,034	1405962,266	322,350
8-3	628626,737	1405960,335	322,350
8-4	628627,381	1405959,570	322,350
9-1	628620,026	1405972,983	322,350
9-2	628619,382	1405973,748	322,350
9-3	628617,086	1405971,818	322,350
9-4	628617,729	1405971,052	322,350
10-1	628610,374	1405984,465	322,350
10-2	628609,731	1405985,231	322,350
10-3	628607,434	1405983,301	322,350
10-4	628608,078	1405982,535	322,350
11-1	628600,723	1405995,948	322,350
11-2	628600,079	1405996,713	322,350
11-3	628597,783	1405994,783	322,350
11-4	628598,426	1405994,018	322,350

UNIVERSIDAD DE BURGOS
ESCUELA POLITÉCNICA SUPERIOR

AUTORES DEL PROYECTO:
D. Alfonso Cid González
Dña. Raquel Estrada Merino
D. Sergio Agustín Ratón Alomar
Dña. Miriam Sacristán Terradillos

PROYECTO FIN DE CARRERA:

PUENTE EN EL PASO DE BOPAL SOBRE EL RÍO GRANDE DE MATAGALPA (NICARAGUA)

TUTOR DEL PROYECTO:
D. Juan Manual Manso Villalaín

FECHA: Febrero de 2012

TITULO DEL PLANO: REPLANTEO . PILAS 7, 8, 9, 10, 11

ESCALA: 1/75 (0 0,6 1,2 1,8 2,4 m)

PLANO: 3.2.4

HOJA: 2 de 2

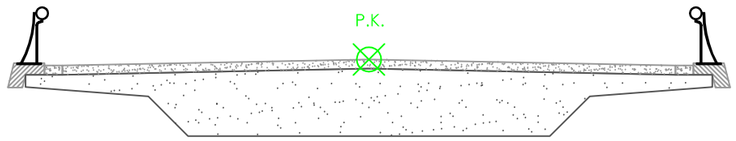

E: 1/100

REPLANTEO DEL EJE DEL TABLERO

P.K.	X UTM	Y UTM	Z msnm
0+000	628705,419	1405869,058	329,750
0+005	628702,202	1405872,885	329,750
0+010	628698,992	1405876,704	329,750
0+015	628695,775	1405880,532	329,750
0+020	628692,551	1405884,368	329,750
0+022.5	628690,850	1405886,392	329,750
0+025	628689,334	1405888,195	329,750
0+030	628686,124	1405892,014	329,750
0+035	628682,906	1405895,842	329,750
0+040	628679,689	1405899,669	329,750
0+045	628676,472	1405903,497	329,750
0+050	628673,255	1405907,324	329,750
0+055	628670,038	1405911,152	329,750
0+060	628666,821	1405914,979	329,750
0+065	628663,603	1405918,807	329,750
0+067.5	628662,080	1405920,619	329,750
0+070	628660,386	1405922,634	329,750
0+075	628657,169	1405926,462	329,750
0+080	628653,945	1405930,298	329,750
0+085	628650,728	1405934,125	329,750
0+090	628647,510	1405937,953	329,750
0+095	628644,293	1405941,780	329,750
0+100	628641,076	1405945,608	329,750
0+105	628637,859	1405949,435	329,750
0+110	628634,642	1405953,263	329,750
0+115	628631,425	1405957,090	329,750
0+120	628628,207	1405960,918	329,750
0+125	628624,990	1405964,745	329,750
0+130	628621,773	1405968,573	329,750
0+135	628618,556	1405972,400	329,750
0+140	628615,339	1405976,228	329,750
0+145	628612,122	1405980,055	329,750
0+150	628608,904	1405983,883	329,750
0+155	628605,687	1405987,710	329,750
0+160	628602,470	1405991,538	329,750
0+165	628599,253	1405995,365	329,750
0+170	628596,036	1405999,193	329,750
0+175	628592,819	1406003,020	329,750

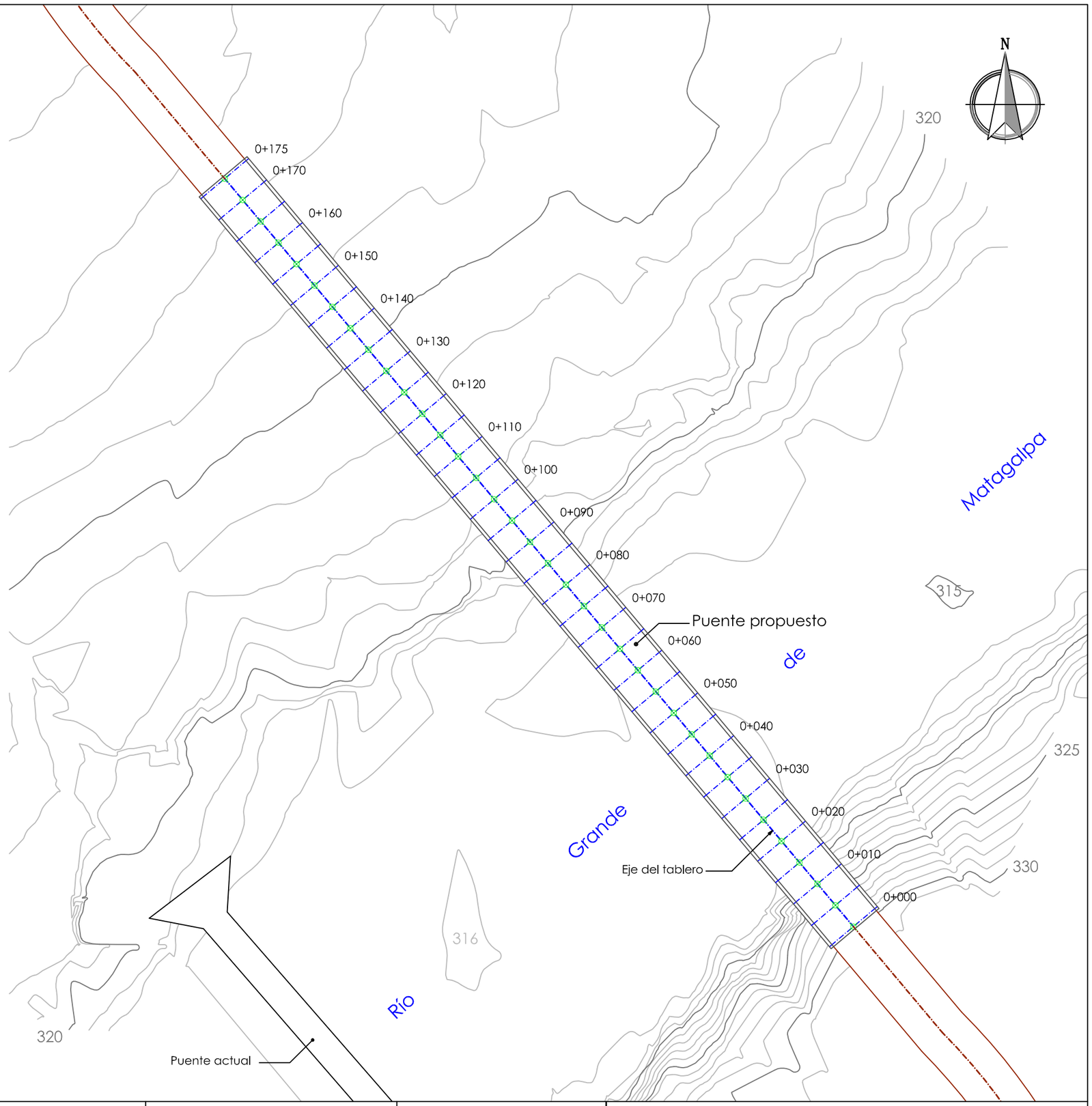

UNIVERSIDAD DE BURGOS ESCUELA POLITÉCNICA SUPERIOR	***AUTORES DEL PROYECTO:*** D. Alfonso Cid González Dña. Raquel Estrada Merino D. Sergio Agustín Ratón Alomar Dña. Miriam Sacristán Terradillos	***PROYECTO FIN DE CARRERA:*** **PUENTE EN EL PASO DE BOPAL SOBRE EL RÍO GRANDE DE MATAGALPA (NICARAGUA)**	***TUTOR DEL PROYECTO:*** D. Juan Manual Manso Villalaín ***FECHA:*** Febrero de 2012

TITULO DEL PLANO: REPLANTEO . TABLERO			
ESCALA: 1/750	0 6 12 18 24 m	***PLANO:*** 3.2.5	***HOJA:*** 1 de 1

SECCIÓN DE LAS ZAPATAS

Cotas en metros

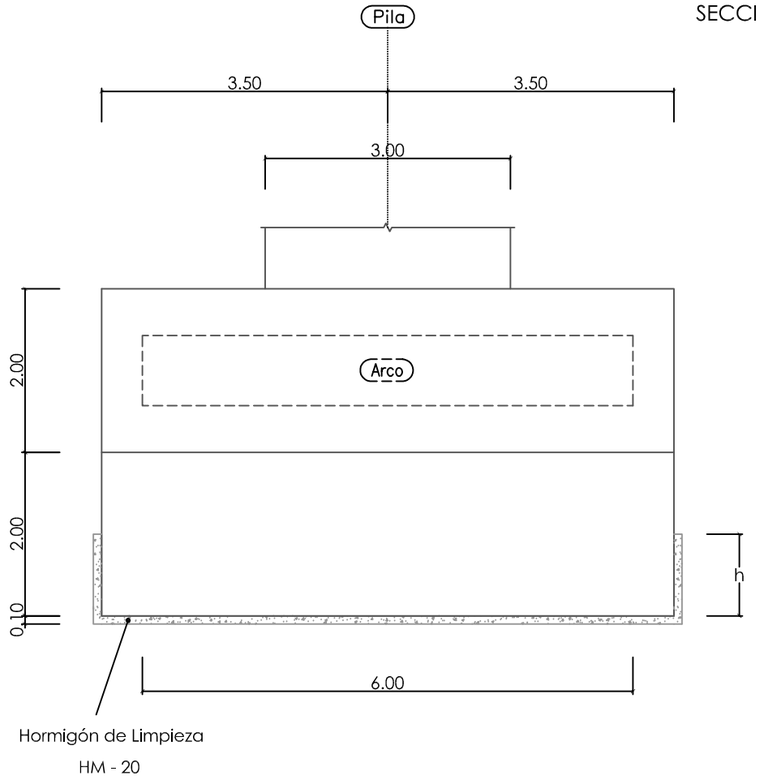

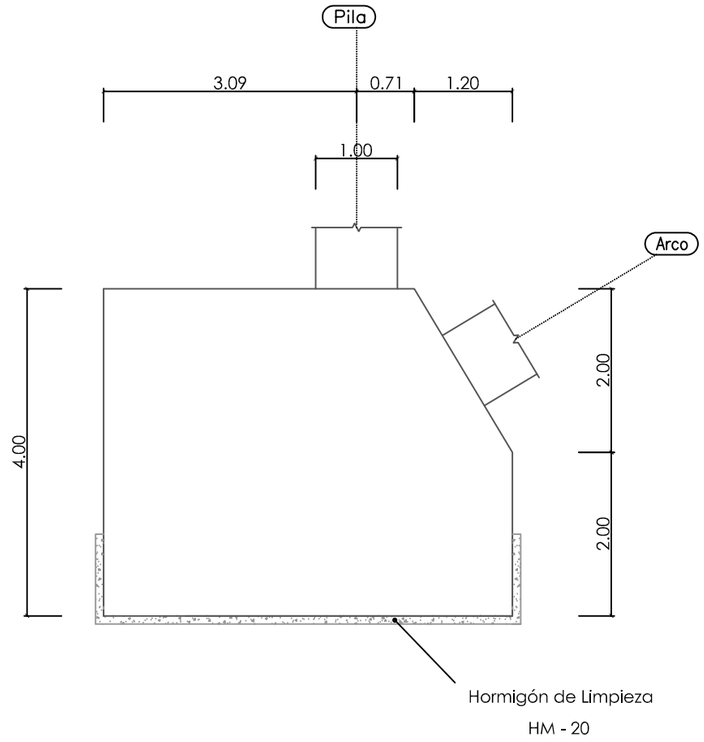

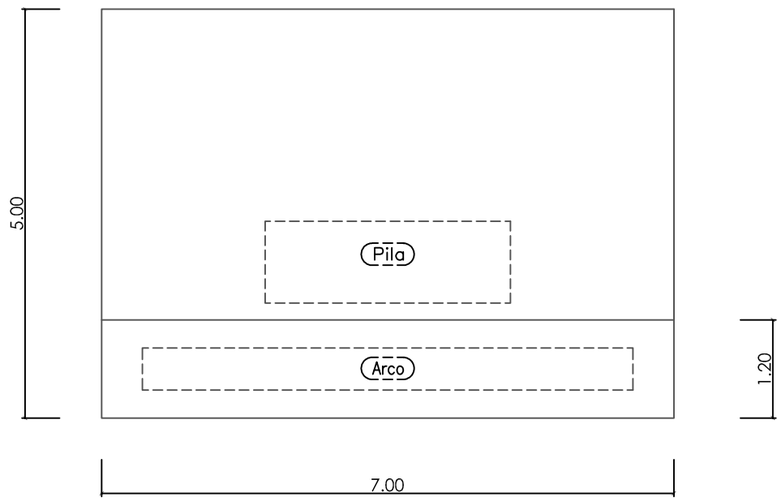

h es la profundidad que se debe de empotrar la zapata para evitar posible inestabilidad.

La zapata deberá de estar empotrada en la roca al menos 100 cm de profundidad, más 10 cm de hormigón de limpieza.

La roca deberá de tener al menos la capacidad resistente de cálculo.

DIAMETROS DE BARRAS CORRUGADAS DE REFUERZO	
Diametros (mm)	Diametros (")
Ø12	Nº4 1/2"
Ø14	Nº5 5/8"
Ø16	Nº6 3/4"
Ø20	Nº7 7/8"
Ø25	Nº8 1"
	Nº9 1-1/8"
Ø32	Nº10 1-1/4"

CUADRO DE CARACTERÍSTICAS SEGÚN EL EUROCODIGO

HORMIGÓN	LOCALIZACIÓN	RESISTENCIA/ CONSISTENCIA/ Ømáx. ÁRIDO/ AMBIENTE	fck N/mm2	NIVEL DE CONTROL	COEF. DE SEGURIDAD Yc
	LIMPIEZA	HM-20 / P / 25	20 (3000 PSI)		
	CIMENTACION	HA-30 / P / 20 / XC2	30 (4500 PSI)	NORMAL	1,50
	ALZADOS	HA-30 / P / 20 / XC2	30 (4500 PSI)	NORMAL	1,50
ARMADURA	TIPO	DESIGNACIÓN	LÍMITE ELÁSTICO fyk N/mm2	NIVEL DE CONTROL	COEF. DE SEGURIDAD Ys
	ACERO PASIVO	B 400 S (Grado 60)	400	NORMAL	1,15
RECUBRIMIENTO NOMINAL		RECUBRIMIENTO MÍNIMO	Cimentaciones: 40 mm	VIDA ÚTIL DE LA ESTRUCTURA: 100 años	
			30 mm	CONTROL DE LA EJECUCIÓN NORMAL	
		Δr	10 mm		
NOTAS	LA DISTANCIA ENTRE CUALQUIER ARMADURA PASIVA Y EL PARAMETRO MAS PROXIMO NO SERA INFERIOR AL VALOR INDICADO. PARA GARANTIZARLO, SE EMPLEARAN LOS OPORTUNOS SEPARADORES.				

UNIVERSIDAD DE BURGOS
ESCUELA POLITÉCNICA SUPERIOR

AUTORES DEL PROYECTO:
D. Alfonso Cid González
Dña. Raquel Estrada Merino
D. Sergio Agustín Ratón Alomar
Dña. Miriam Sacristán Terradillos

PROYECTO FIN DE CARRERA:

PUENTE EN EL PASO DE BOPAL SOBRE EL RÍO GRANDE DE MATAGALPA (NICARAGUA)

TUTOR DEL PROYECTO:
D. Juan Manual Manso Villalaín

FECHA: Febrero de 2012

TITULO DEL PLANO: CIMENTACIONES. GEOMETRÍA DE LAS ZAPATAS

ESCALA: 1/75 (0 0,6 1,2 1,8 2,4 m)

PLANO: 3.3.1.1

HOJA: 1 de 1

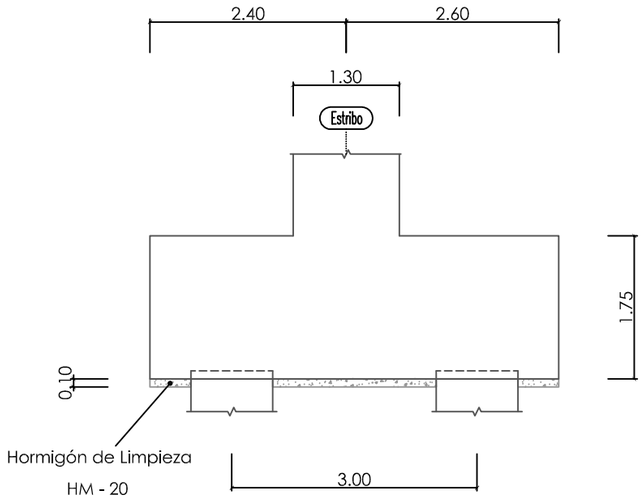

SECCIÓN DEL ENCEPADO DEL ESTRIBO 2

Cotas en metros

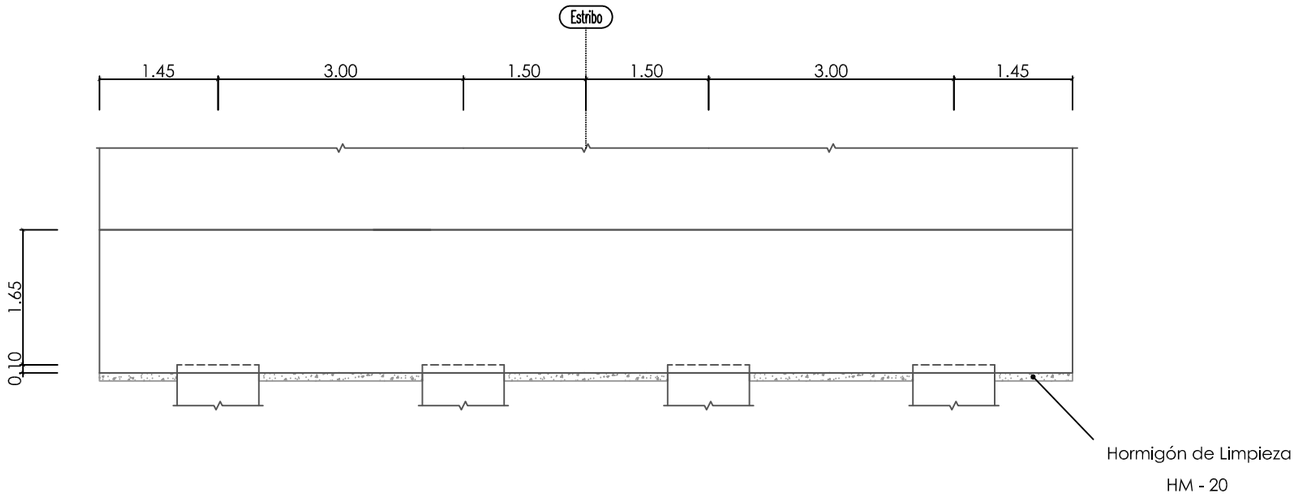

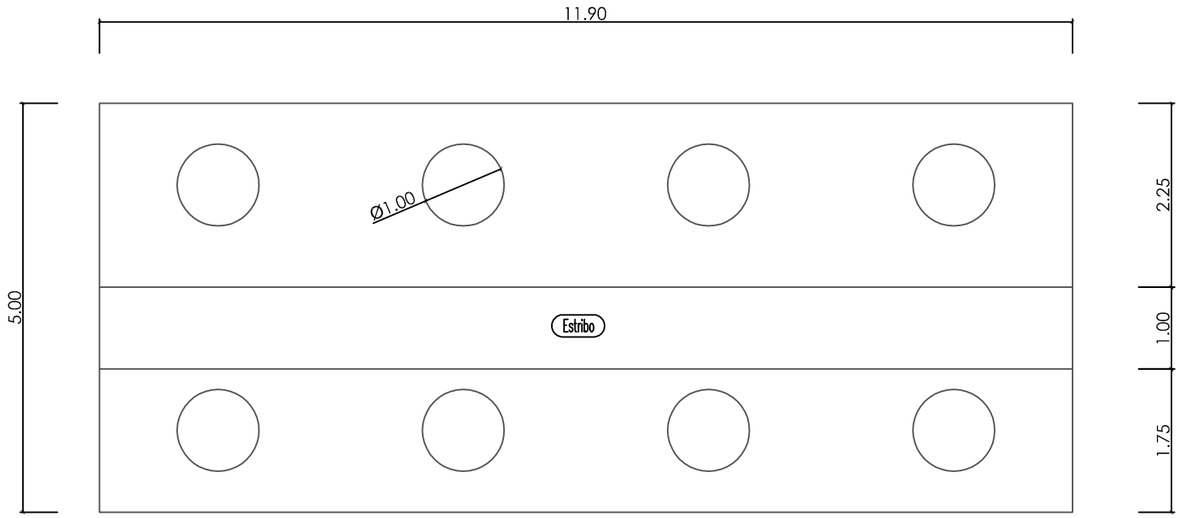

LONGITUD DE LOS PILOTES

E: 1/250

Cotas en metros

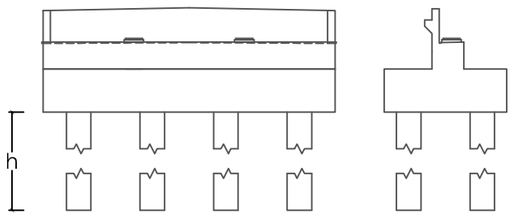

h es en función de la profundidad a la que se encuentre la roca sana.

La roca deberá tener al menos la capacidad resistente de cálculo.

Cada grupo de pilotes deberán de medir la longitud suficiente como para que queden empotrados en la roca al menos 1,5Ø.

SECCIÓN DE LOS PILOTES

E: 1/50

Cotas en metros

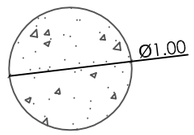

DIAMETROS DE BARRAS CORRUGADAS DE REFUERZO	
Diametros (mm)	Diametros (")
Ø12	Nº4 1/2"
Ø14	Nº5 5/8"
Ø16	Nº6 3/4"
Ø20	Nº7 7/8"
Ø25	Nº8 1"
	Nº9 1-1/8"
Ø32	Nº10 1-1/4"

CUADRO DE CARACTERÍSTICAS SEGÚN EL EUROCODIGO

HORMIGÓN	LOCALIZACIÓN	RESISTENCIA/ CONSISTENCIA/ Ømáx. ÁRIDO/ AMBIENTE	fck N/mm2	NIVEL DE CONTROL	COEF. DE SEGURIDAD Yc
	LIMPIEZA	HM-20 / P / 25	20 (3000 PSI)		
	CIMENTACION	HA-30 / P / 20 / XC2	30 (4500 PSI)	NORMAL	1,50
	ALZADOS	HA-30 / P / 20 / XC2	30 (4500 PSI)	NORMAL	1,50
ARMADURA	TIPO	DESIGNACIÓN	LÍMITE ELÁSTICO fyk N/mm2	NIVEL DE CONTROL	COEF. DE SEGURIDAD Ys
	ACERO PASIVO	B 400 S (Grado 60)	400	NORMAL	1,15
RECUBRIMIENTO NOMINAL		RECUBRIMIENTO MÍNIMO	Cimentaciones: 40 mm 30 mm	VIDA ÚTIL DE LA ESTRUCTURA: 100 años CONTROL DE LA EJECUCIÓN NORMAL	
		Δr	10 mm		
NOTAS	LA DISTANCIA ENTRE CUALQUIER ARMADURA PASIVA Y EL PARAMETRO MAS PROXIMO NO SERA INFERIOR AL VALOR INDICADO. PARA GARANTIZARLO, SE EMPLEARAN LOS OPORTUNOS SEPARADORES.				

UNIVERSIDAD DE BURGOS
ESCUELA POLITÉCNICA SUPERIOR

AUTORES DEL PROYECTO:
D. Alfonso Cid González
Dña. Raquel Estrada Merino
D. Sergio Agustín Ratón Alomar
Dña. Miriam Sacristán Terradillos

PROYECTO FIN DE CARRERA:

PUENTE EN EL PASO DE BOPAL SOBRE EL RÍO GRANDE DE MATAGALPA (NICARAGUA)

TUTOR DEL PROYECTO:
D. Juan Manual Manso Villalaín

FECHA: Febrero de 2012

TITULO DEL PLANO: CIMENTACIONES. GEOMETRÍA DE LOS ENCEPADOS

ESCALA: 1/75 (0 0,6 1,2 1,8 2,4 m)

PLANO: 3.3.1.2

HOJA: 1 de 2

SECCIÓN DEL ENCEPADO DE LAS PILAS

Cotas en metros

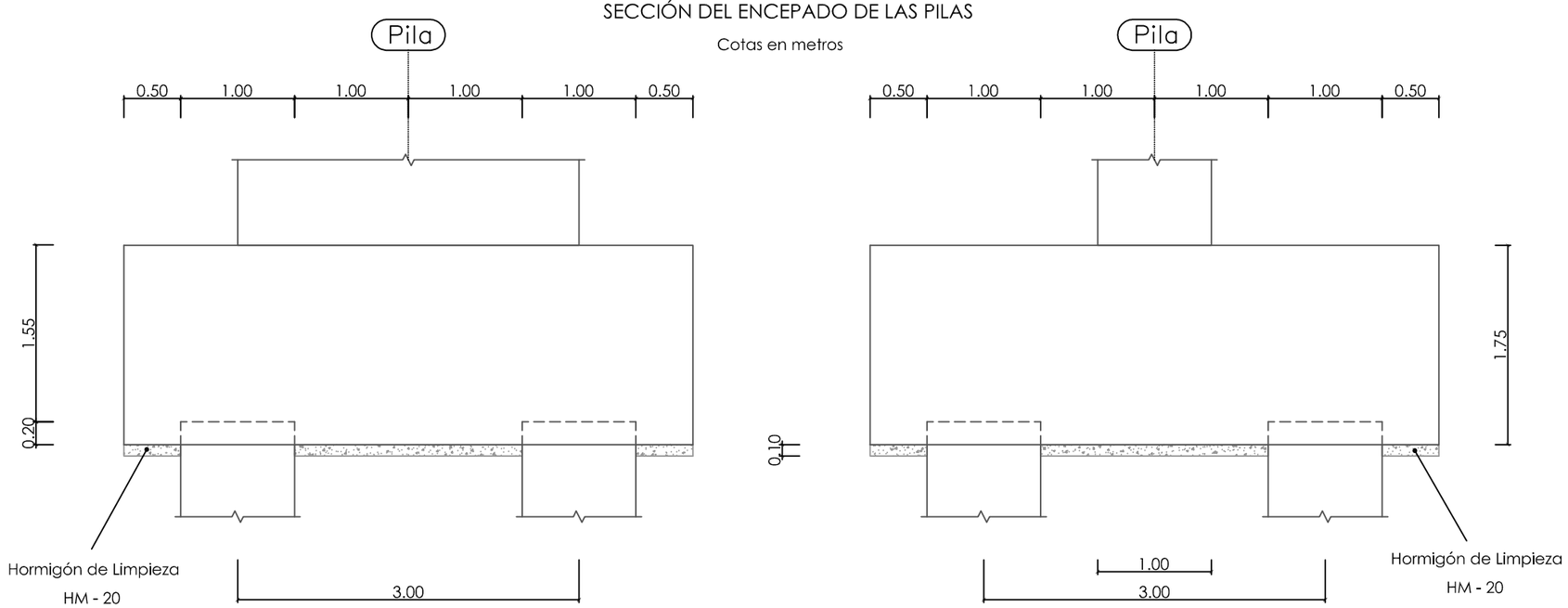

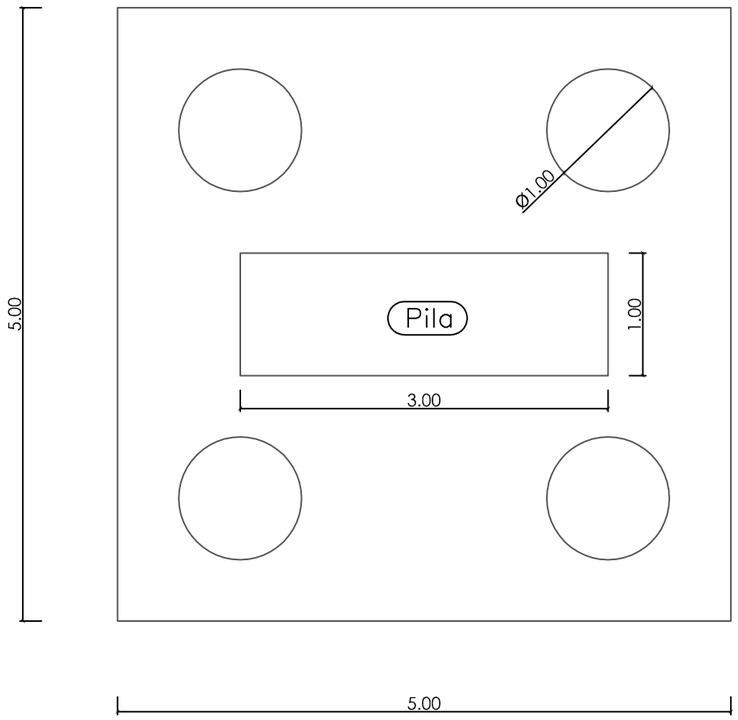

SECCIÓN DE LOS PILOTES

Cotas en metros

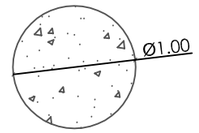

LONGITUD DE LOS PILOTES

E: 1/250

Cotas en metros

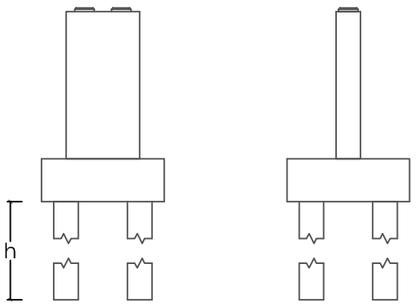

h es en función de la profundidad a la que se encuentre la roca sana en cada caso.

La roca deberá tener al menos la capacidad resistente de cálculo.

Cada grupo de pilotes deberán de medir la longitud suficiente como para que queden empotrados en la roca al menos 1,5Ø.

DIAMETROS DE BARRAS CORRUGADAS DE REFUERZO	
Diametros (mm)	Diametros (")
Ø12	Nº4 1/2"
Ø14	Nº5 5/8"
Ø16	Nº6 3/4"
Ø20	Nº7 7/8"
Ø25	Nº8 1"
	Nº9 1-1/8"
Ø32	Nº10 1-1/4"

CUADRO DE CARACTERÍSTICAS SEGÚN EL EUROCODIGO

HORMIGÓN	LOCALIZACIÓN	RESISTENCIA/ CONSISTENCIA/ Ømáx. ÁRIDO/ AMBIENTE	fck N/mm2	NIVEL DE CONTROL	COEF. DE SEGURIDAD Yc
	LIMPIEZA	HM-20 / P / 25	20 (3000 PSI)		
	CIMENTACION	HA-30 / P / 20 / XC2	30 (4500 PSI)	NORMAL	1,50
	ALZADOS	HA-30 / P / 20 / XC2	30 (4500 PSI)	NORMAL	1,50
ARMADURA	TIPO	DESIGNACIÓN	LÍMITE ELÁSTICO fyk N/mm2	NIVEL DE CONTROL	COEF. DE SEGURIDAD Ys
	ACERO PASIVO	B 400 S (Grado 60)	400	NORMAL	1,15
RECUBRIMIENTO NOMINAL	RECUBRIMIENTO MÍNIMO	Cimentaciones: 40 mm	VIDA ÚTIL DE LA ESTRUCTURA: 100 años		
		30 mm			
	Δr	10 mm	CONTROL DE LA EJECUCIÓN NORMAL		
NOTAS	LA DISTANCIA ENTRE CUALQUIER ARMADURA PASIVA Y EL PARAMETRO MAS PROXIMO NO SERA INFERIOR AL VALOR INDICADO. PARA GARANTIZARLO, SE EMPLEARAN LOS OPORTUNOS SEPARADORES.				

UNIVERSIDAD DE BURGOS
ESCUELA POLITÉCNICA SUPERIOR

AUTORES DEL PROYECTO:
D. Alfonso Cid González
Dña. Raquel Estrada Merino
D. Sergio Agustín Ratón Alomar
Dña. Miriam Sacristán Terradillos

PROYECTO FIN DE CARRERA:

PUENTE EN EL PASO DE BOPAL SOBRE EL RÍO GRANDE DE MATAGALPA (NICARAGUA)

TUTOR DEL PROYECTO:
D. Juan Manual Manso Villalaín

FECHA: Febrero de 2012

TITULO DEL PLANO: CIMENTACIONES. GEOMETRÍA DE L OS ENCEPADOS

ESCALA: 1/50 (0 0,5 1,0 1,5 m)

PLANO: 3.3.1.2

HOJA: 2 de 2

ARMADO DE LAS ZAPATAS

Cotas en metros

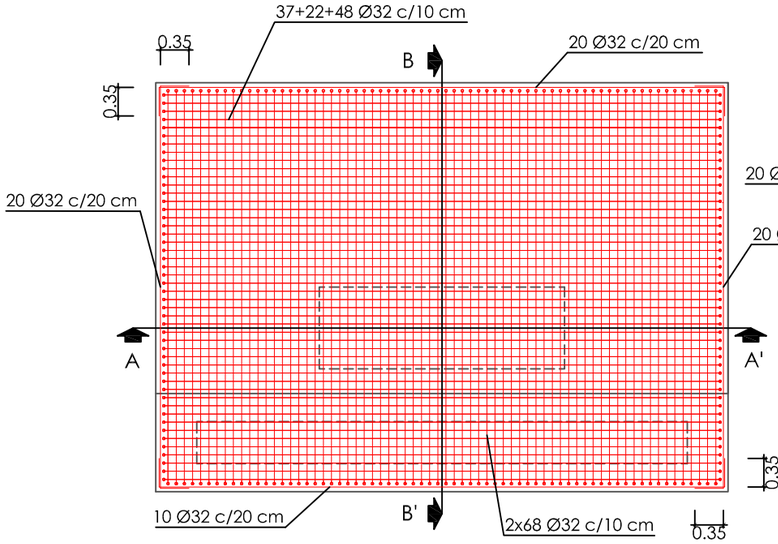

Vista del armado Inferior y Superior

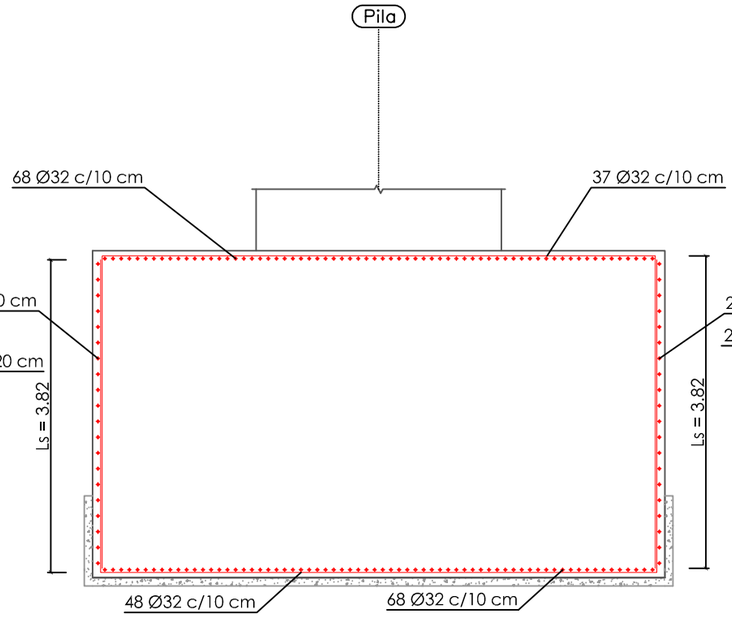

SECCIÓN A-A'

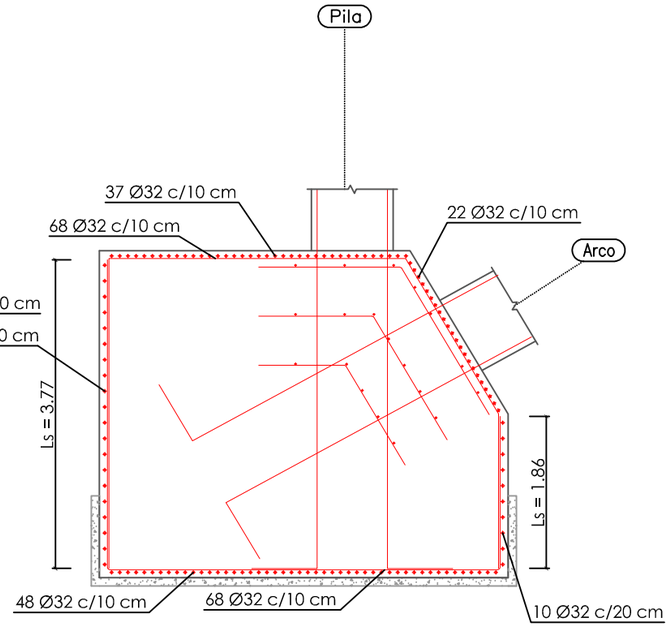

SECCIÓN B-B'

DETALLE DEL ARMADO

E: 1/50

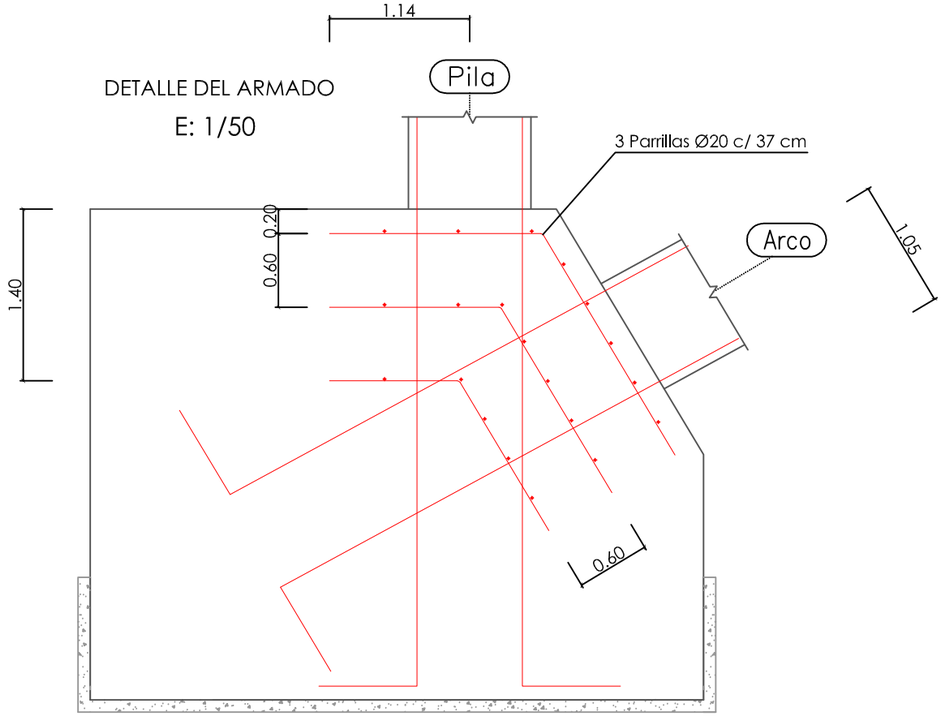

DIAMETROS DE BARRAS CORRUGADAS DE REFUERZO	
Diametros (mm)	Diametros (")
Ø12	Nº4 1/2"
Ø14	Nº5 5/8"
Ø16	Nº6 3/4"
Ø20	Nº7 7/8"
Ø25	Nº8 1"
	Nº9 1-1/8"
Ø32	Nº10 1-1/4"

CUADRO DE CARACTERÍSTICAS SEGÚN EL EUROCODIGO

HORMIGÓN	LOCALIZACIÓN	RESISTENCIA/ CONSISTENCIA/ Ømáx. ÁRIDO/ AMBIENTE	fck N/mm2	NIVEL DE CONTROL	COEF. DE SEGURIDAD Yc
	LIMPIEZA	HM-20 / P / 25	20 (3000 PSI)		
	CIMENTACION	HA-30 / P / 20 / XC2	30 (4500 PSI)	NORMAL	1,50
	ALZADOS	HA-30 / P / 20 / XC2	30 (4500 PSI)	NORMAL	1,50
ARMADURA	TIPO	DESIGNACIÓN	LÍMITE ELÁSTICO fyk N/mm2	NIVEL DE CONTROL	COEF. DE SEGURIDAD Ys
	ACERO PASIVO	B 400 S (Grado 60)	400	NORMAL	1,15
RECUBRIMIENTO NOMINAL		RECUBRIMIENTO MÍNIMO	Cimentaciones: 40 mm	VIDA ÚTIL DE LA ESTRUCTURA: 100 años	
			30 mm		
		Δr	10 mm	CONTROL DE LA EJECUCIÓN NORMAL	
NOTAS	LA DISTANCIA ENTRE CUALQUIER ARMADURA PASIVA Y EL PARAMETRO MAS PROXIMO NO SERA INFERIOR AL VALOR INDICADO. PARA GARANTIZARLO, SE EMPLEARAN LOS OPORTUNOS SEPARADORES.				

UNIVERSIDAD DE BURGOS
ESCUELA POLITÉCNICA SUPERIOR

AUTORES DEL PROYECTO:
D. Alfonso Cid González
Dña. Raquel Estrada Merino
D. Sergio Agustín Ratón Alomar
Dña. Miriam Sacristán Terradillos

PROYECTO FIN DE CARRERA:

PUENTE EN EL PASO DE BOPAL SOBRE EL RÍO GRANDE DE MATAGALPA (NICARAGUA)

TUTOR DEL PROYECTO:
D. Juan Manual Manso Villalaín

FECHA: Febrero de 2012

TITULO DEL PLANO: CIMENTACIONES. ARMADO DE LAS ZAPATAS

ESCALA: 1/75 (0 0.6 1.2 1.8 2.4 m)

PLANO: 3.3.2.1

HOJA: 1 de 1

ARMADO DEL ENCEPADO DEL ESTRIBO 2

Cotas en metros

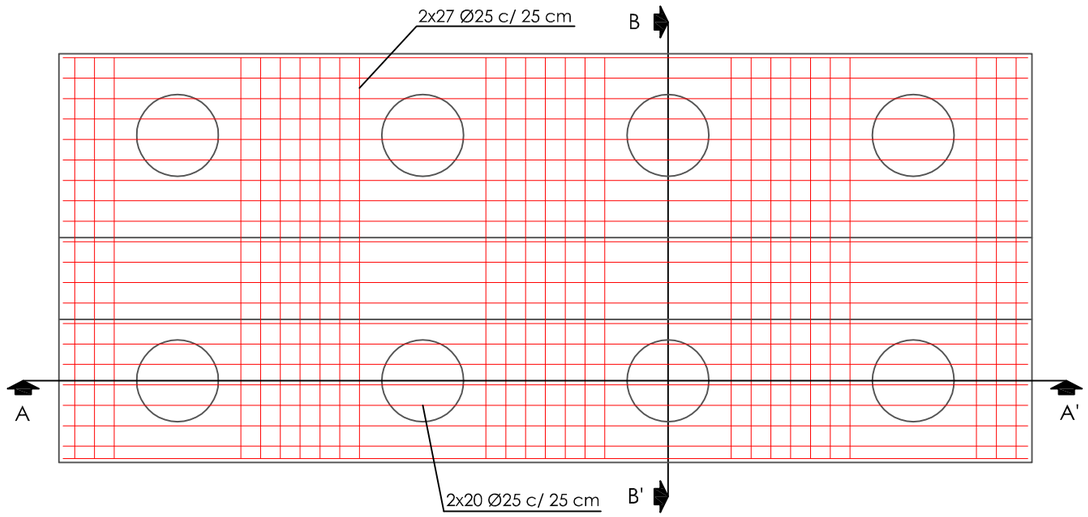

Vista del armado Inferior y Superior

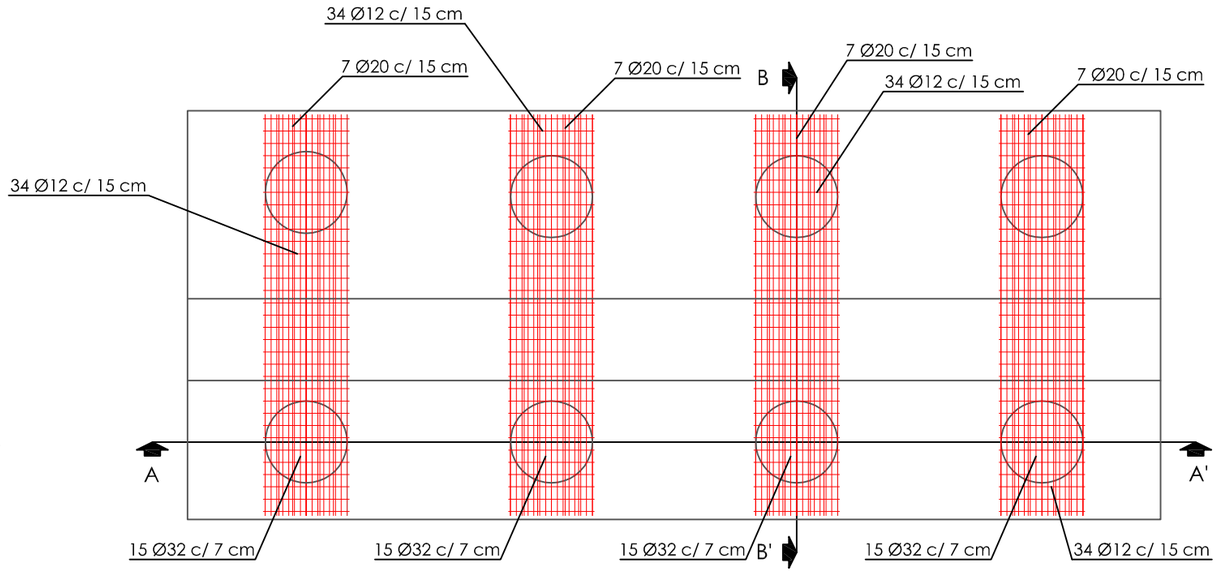

Viga de atado de los pilotes paralela a Y

SECCIÓN A-A'

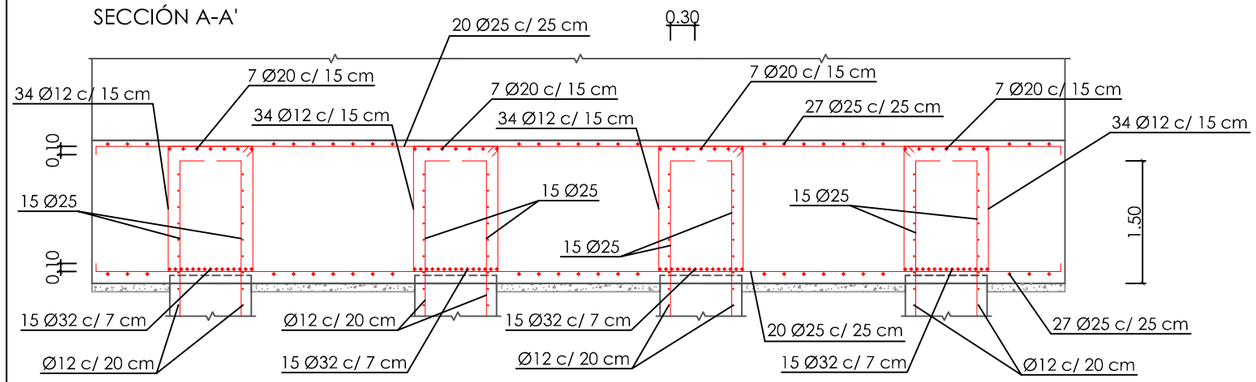

SECCIÓN B-B'

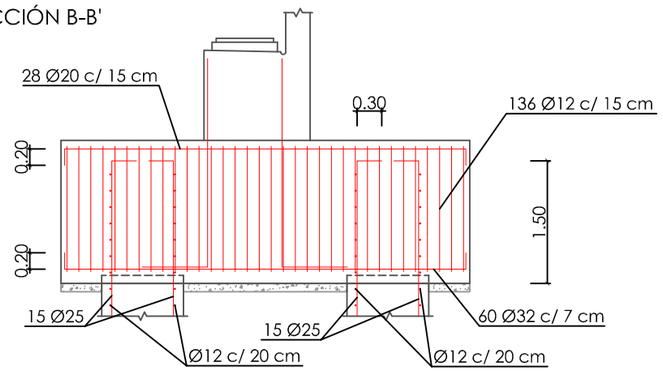

SECCIÓN DE LOS PILOTES

E: 1/25

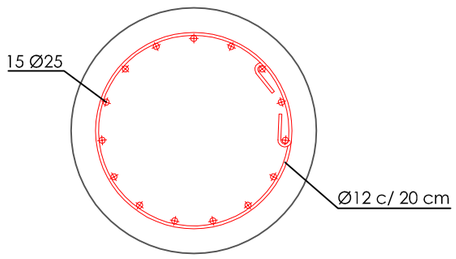

DETALLE

E: 1/20

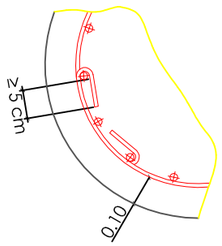

DIAMETROS DE BARRAS CORRUGADAS DE REFUERZO	
Diametros (mm)	Diametros (")
Ø12	Nº4 1/2"
Ø14	Nº5 5/8"
Ø16	Nº6 3/4"
Ø20	Nº7 7/8"
Ø25	Nº8 1"
	Nº9 1-1/8"
Ø32	Nº10 1-1/4"

CUADRO DE CARACTERÍSTICAS SEGÚN EL EUROCODIGO

HORMIGÓN	LOCALIZACIÓN	RESISTENCIA/ CONSISTENCIA/ Ømáx. ÁRIDO/ AMBIENTE	fck N/mm2	NIVEL DE CONTROL	COEF. DE SEGURIDAD Yc
	LIMPIEZA	HM-20 / P / 25	20 (3000 PSI)		
	CIMENTACION	HA-30 / P / 20 / XC2	30 (4500 PSI)	NORMAL	1,50
	ALZADOS	HA-30 / P / 20 / XC2	30 (4500 PSI)	NORMAL	1,50
ARMADURA	TIPO	DESIGNACIÓN	LÍMITE ELÁSTICO fyk N/mm2	NIVEL DE CONTROL	COEF. DE SEGURIDAD Ys
	ACERO PASIVO	B 400 S (Grado 60)	400	NORMAL	1,15
RECUBRIMIENTO NOMINAL		RECUBRIMIENTO MÍNIMO	Cimentaciones: 40 mm	VIDA ÚTIL DE LA ESTRUCTURA: 100 años	
			30 mm		
		Δr	10 mm	CONTROL DE LA EJECUCIÓN NORMAL	
NOTAS	LA DISTANCIA ENTRE CUALQUIER ARMADURA PASIVA Y EL PARAMETRO MAS PROXIMO NO SERA INFERIOR AL VALOR INDICADO. PARA GARANTIZARLO, SE EMPLEARAN LOS OPORTUNOS SEPARADORES.				

UNIVERSIDAD DE BURGOS
ESCUELA POLITÉCNICA SUPERIOR

AUTORES DEL PROYECTO:
D. Alfonso Cid González
Dña. Raquel Estrada Merino
D. Sergio Agustín Ratón Alomar
Dña. Miriam Sacristán Terradillos

PROYECTO FIN DE CARRERA:

PUENTE EN EL PASO DE BOPAL SOBRE EL RÍO GRANDE DE MATAGALPA (NICARAGUA)

TUTOR DEL PROYECTO:
D. Juan Manual Manso Villalaín

FECHA: Febrero de 2012

TITULO DEL PLANO: CIMENTACIONES. ARMADO DE LOS ENCEPADOS

ESCALA: 1/75 (0 0.6 1.2 1.8 2.4 m)

PLANO: 3.3.2.2

HOJA: 1 de 3

ARMADO DEL ENCEPADO DE LAS PILAS

Cotas en metros

SECCIÓN A-A'

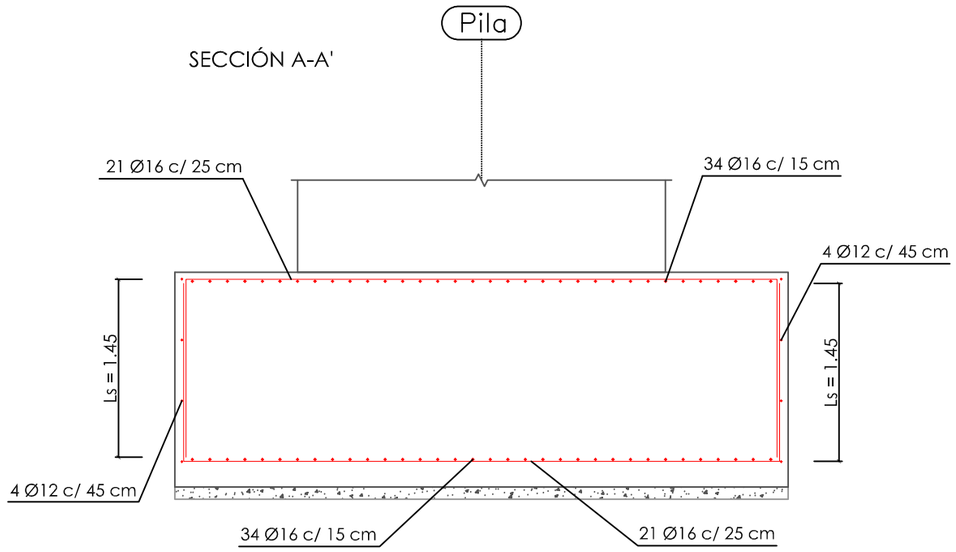

SECCIÓN B-B'

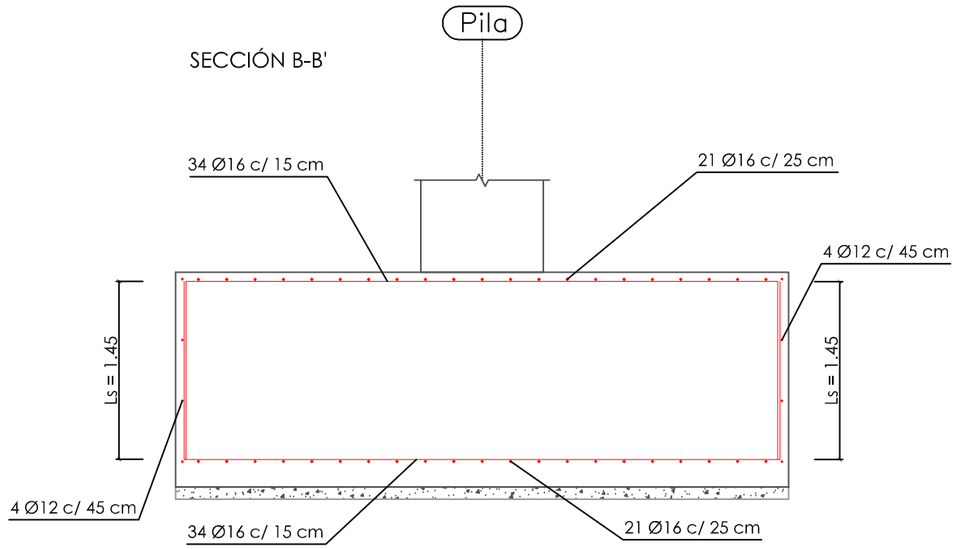

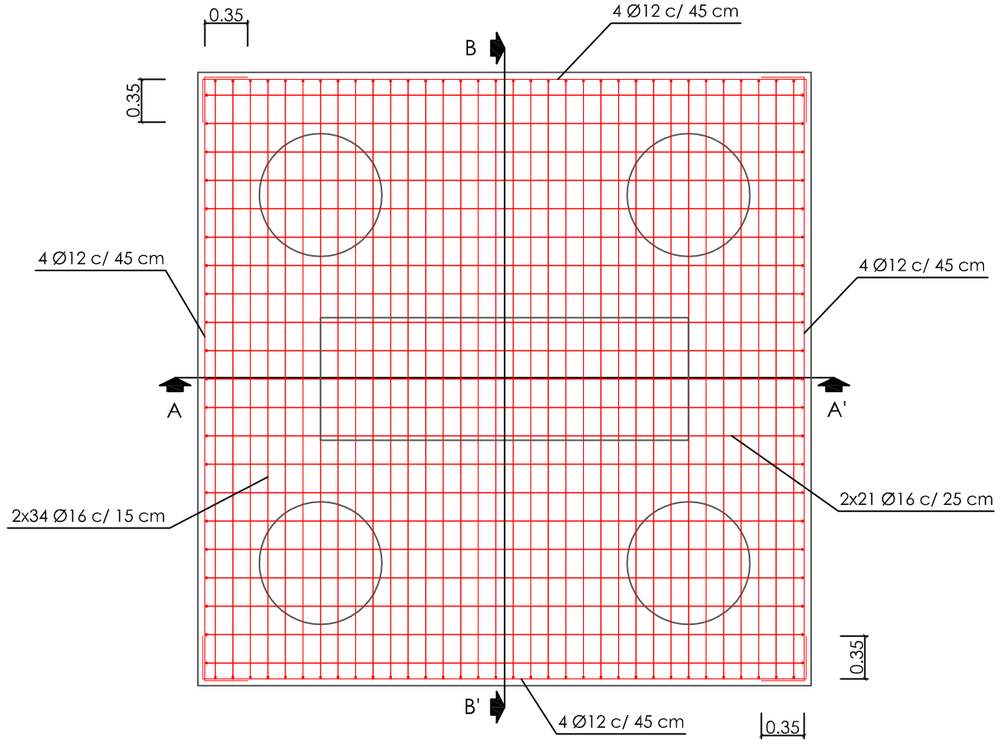

Vista del armado Inferior y Superior

DIAMETROS DE BARRAS CORRUGADAS DE REFUERZO	
Diametros (mm)	Diametros (")
Ø12	Nº4 1/2"
Ø14	Nº5 5/8"
Ø16	Nº6 3/4"
Ø20	Nº7 7/8"
Ø25	Nº8 1"
	Nº9 1-1/8"
Ø32	Nº10 1-1/4"

CUADRO DE CARACTERÍSTICAS SEGÚN EL EUROCODIGO

HORMIGÓN	LOCALIZACIÓN	RESISTENCIA/ CONSISTENCIA/ Ømáx. ÁRIDO/ AMBIENTE	fck N/mm2	NIVEL DE CONTROL	COEF. DE SEGURIDAD Yc
	LIMPIEZA	HM-20 / P / 25	20 (3000 PSI)		
	CIMENTACION	HA-30 / P / 20 / XC2	30 (4500 PSI)	NORMAL	1,50
	ALZADOS	HA-30 / P / 20 / XC2	30 (4500 PSI)	NORMAL	1,50
ARMADURA	TIPO	DESIGNACIÓN	LÍMITE ELÁSTICO fyk N/mm2	NIVEL DE CONTROL	COEF. DE SEGURIDAD Ys
	ACERO PASIVO	B 400 S (Grado 60)	400	NORMAL	1,15
RECUBRIMIENTO NOMINAL		RECUBRIMIENTO MÍNIMO	Cimentaciones: 40 mm	VIDA ÚTIL DE LA ESTRUCTURA: 100 años	
			30 mm	CONTROL DE LA EJECUCIÓN NORMAL	
		Δr	10 mm		
NOTAS	LA DISTANCIA ENTRE CUALQUIER ARMADURA PASIVA Y EL PARAMETRO MAS PROXIMO NO SERA INFERIOR AL VALOR INDICADO. PARA GARANTIZARLO, SE EMPLEARAN LOS OPORTUNOS SEPARADORES.				

UNIVERSIDAD DE BURGOS
ESCUELA POLITÉCNICA SUPERIOR

AUTORES DEL PROYECTO:
D. Alfonso Cid González
Dña. Raquel Estrada Merino
D. Sergio Agustín Ratón Alomar
Dña. Miriam Sacristán Terradillos

PROYECTO FIN DE CARRERA:

PUENTE EN EL PASO DE BOPAL SOBRE EL RÍO GRANDE DE MATAGALPA (NICARAGUA)

TUTOR DEL PROYECTO:
D. Juan Manual Manso Villalaín

FECHA: Febrero de 2012

TITULO DEL PLANO: CIMENTACIONES. ARMADO DE LOS ENCEPADOS

ESCALA: 1/50 (0 0,5 1,0 1,5 m)

PLANO: 3.3.2.2

HOJA: 2 de 3

ARMADO DEL ENCEPADO DE LAS PILAS

Cotas en metros

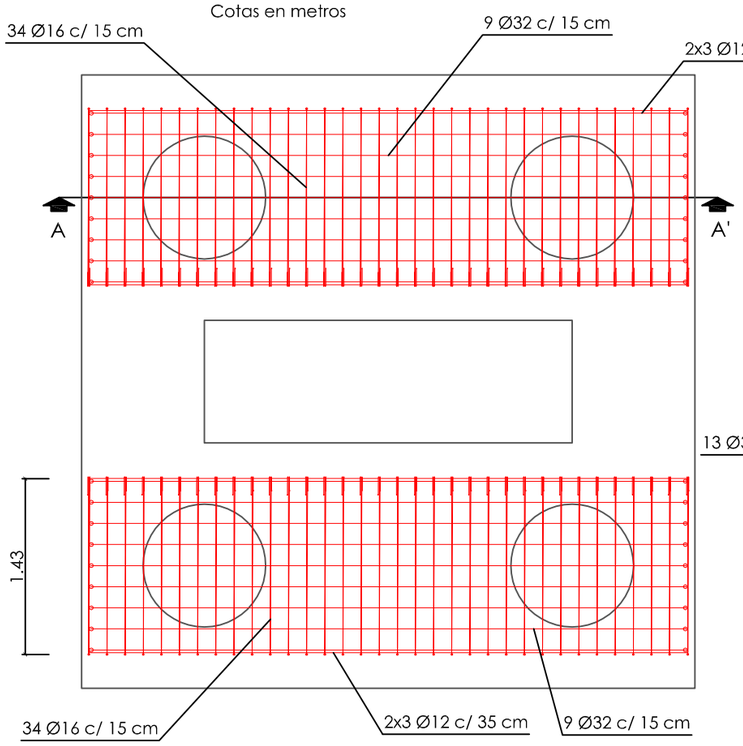

Viga de atado de los pilotes paralela a X

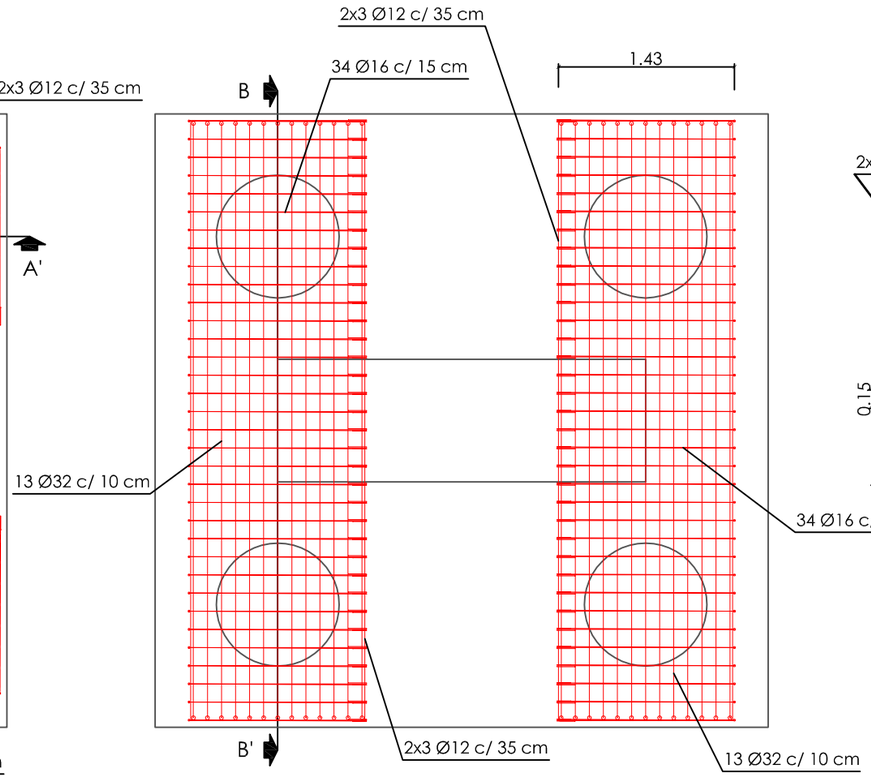

Viga de atado de los pilotes paralela a Y

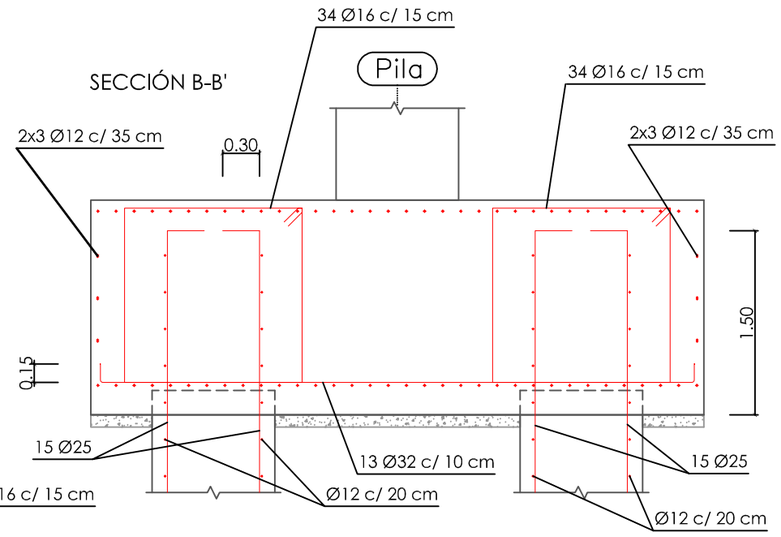

SECCIÓN A-A'

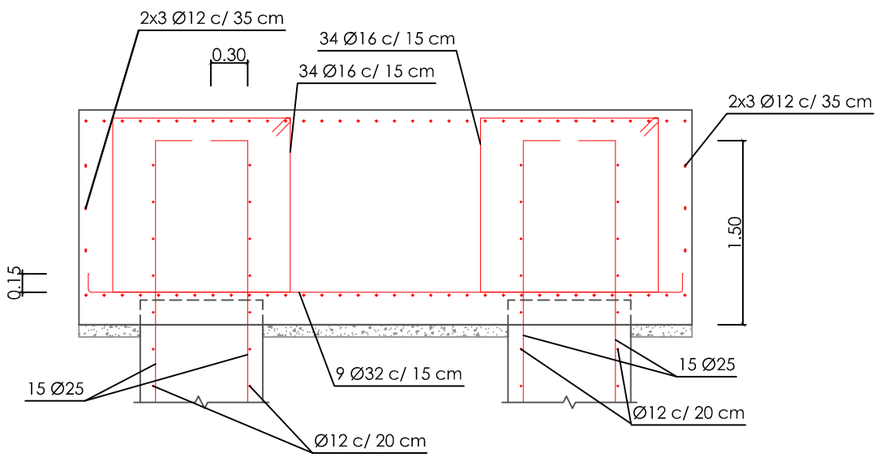

SECCIÓN DE LOS PILOTES

E: 1/25

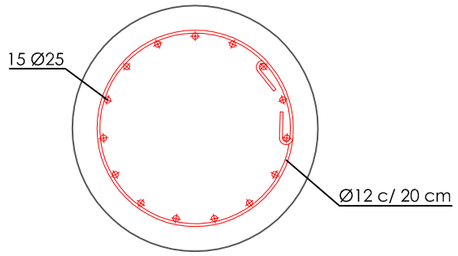

DETALLE

E: 1/20

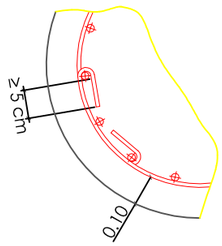

DIAMETROS DE BARRAS CORRUGADAS DE REFUERZO	
Diametros (mm)	Diametros (")
Ø12	Nº4 1/2"
Ø14	Nº5 5/8"
Ø16	Nº6 3/4"
Ø20	Nº7 7/8"
Ø25	Nº8 1"
	Nº9 1-1/8"
Ø32	Nº10 1-1/4"

CUADRO DE CARACTERÍSTICAS SEGÚN EL EUROCODIGO

HORMIGÓN	LOCALIZACIÓN	RESISTENCIA/ CONSISTENCIA/ Ømáx. ÁRIDO/ AMBIENTE	fck N/mm2	NIVEL DE CONTROL	COEF. DE SEGURIDAD Yc
	LIMPIEZA	HM-20 / P / 25	20 (3000 PSI)		
	CIMENTACION	HA-30 / P / 20 / XC2	30 (4500 PSI)	NORMAL	1,50
	ALZADOS	HA-30 / P / 20 / XC2	30 (4500 PSI)	NORMAL	1,50
ARMADURA	TIPO	DESIGNACIÓN	LÍMITE ELÁSTICO fyk N/mm2	NIVEL DE CONTROL	COEF. DE SEGURIDAD Ys
	ACERO PASIVO	B 400 S (Grado 60)	400	NORMAL	1,15
RECUBRIMIENTO NOMINAL		RECUBRIMIENTO MÍNIMO	Cimentaciones: 40 mm	VIDA ÚTIL DE LA ESTRUCTURA: 100 años	
			30 mm	CONTROL DE LA EJECUCIÓN NORMAL	
		Δr	10 mm		

NOTAS: LA DISTANCIA ENTRE CUALQUIER ARMADURA PASIVA Y EL PARAMETRO MAS PROXIMO NO SERA INFERIOR AL VALOR INDICADO. PARA GARANTIZARLO, SE EMPLEARAN LOS OPORTUNOS SEPARADORES.

UNIVERSIDAD DE BURGOS
ESCUELA POLITÉCNICA SUPERIOR

AUTORES DEL PROYECTO:
D. Alfonso Cid González
Dña. Raquel Estrada Merino
D. Sergio Agustín Ratón Alomar
Dña. Miriam Sacristán Terradillos

PROYECTO FIN DE CARRERA:

PUENTE EN EL PASO DE BOPAL SOBRE EL RÍO GRANDE DE MATAGALPA (NICARAGUA)

TUTOR DEL PROYECTO:
D. Juan Manual Manso Villalaín

FECHA: Febrero de 2012

TITULO DEL PLANO: CIMENTACIONES. ARMADO DE LOS ENCEPADOS

ESCALA: 1/50 (0 0,5 1,0 1,5 m)

PLANO: 3.3.2.2

HOJA: 3 de 3

SECCIÓN DEL ESTRIBO 2

Cotas en metros

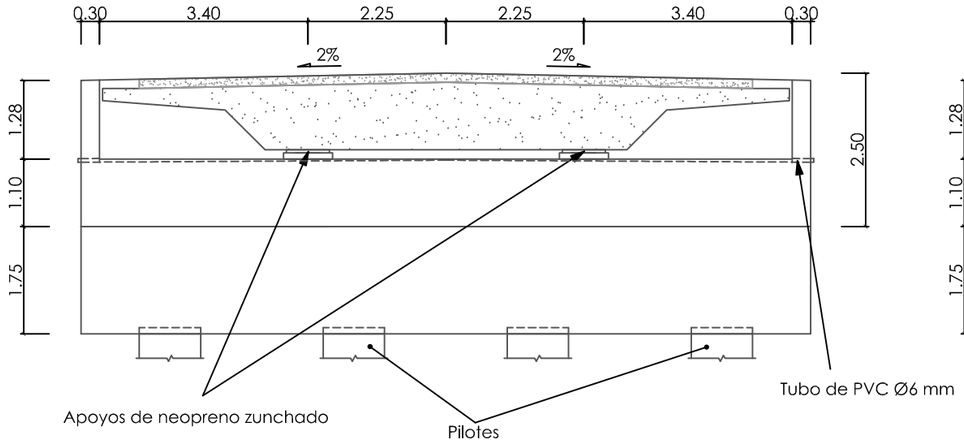

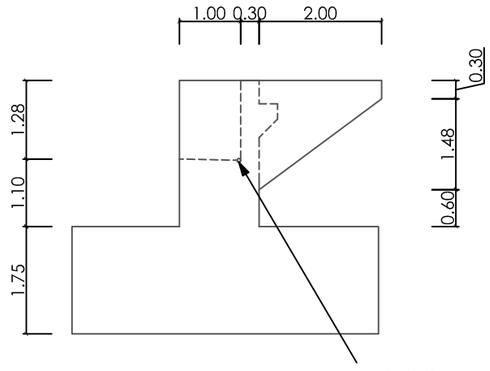

SECCIÓN DEL CORTE A-A'

E: 1/75

Cotas en metros

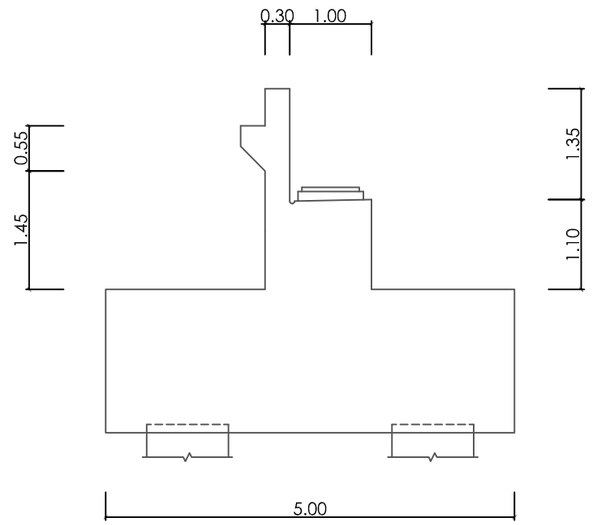

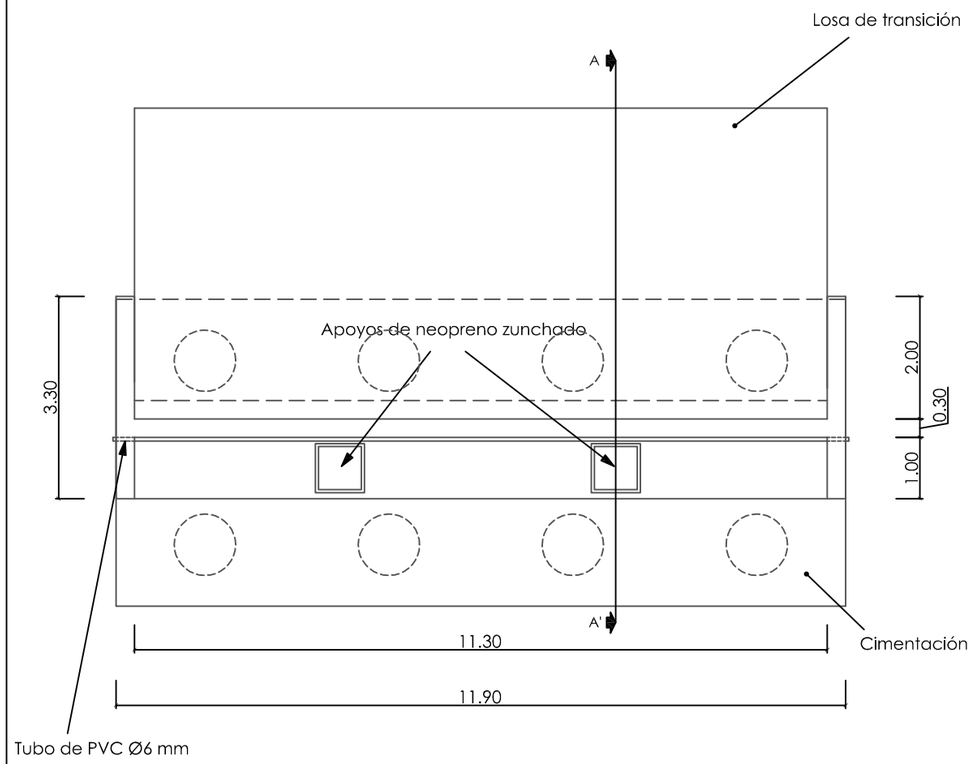

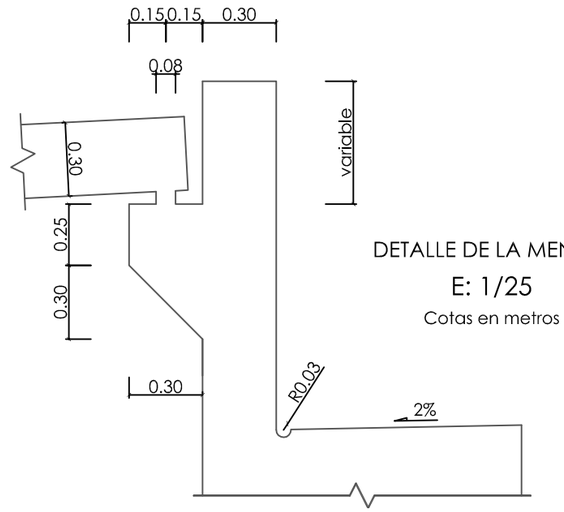

DETALLE DE LA MENSULA

E: 1/25

Cotas en metros

DIAMETROS DE BARRAS CORRUGADAS DE REFUERZO	
Diametros (mm)	Diametros (")
Ø12	Nº4 1/2"
Ø14	Nº5 5/8"
Ø16	Nº6 3/4"
Ø20	Nº7 7/8"
Ø25	Nº8 1"
	Nº9 1-1/8"
Ø32	Nº10 1-1/4"

CUADRO DE CARACTERÍSTICAS SEGÚN EL EUROCODIGO

HORMIGÓN	LOCALIZACIÓN	RESISTENCIA/ CONSISTENCIA/ Ømáx. ÁRIDO/ AMBIENTE	fck N/mm2	NIVEL DE CONTROL	COEF. DE SEGURIDAD Yc
	LIMPIEZA	HM-20 / P / 25	20 (3000 PSI)		
	CIMENTACION	HA-30 / P / 20 / XC2	30 (4500 PSI)	NORMAL	1,50
	ALZADOS	HA-30 / P / 20 / XC2	30 (4500 PSI)	NORMAL	1,50

ARMADURA	TIPO	DESIGNACIÓN	LÍMITE ELÁSTICO fyk N/mm2	NIVEL DE CONTROL	COEF. DE SEGURIDAD Ys
	ACERO PASIVO	B 400 S (Grado 60)	400	NORMAL	1,15

RECUBRIMIENTO NOMINAL	RECUBRIMIENTO MÍNIMO	Cimentaciones: 40 mm	VIDA ÚTIL DE LA ESTRUCTURA: 100 años
		30 mm	
	Δr	10 mm	CONTROL DE LA EJECUCIÓN NORMAL

NOTAS: LA DISTANCIA ENTRE CUALQUIER ARMADURA PASIVA Y EL PARAMETRO MAS PROXIMO NO SERA INFERIOR AL VALOR INDICADO. PARA GARANTIZARLO, SE EMPLEARAN LOS OPORTUNOS SEPARADORES.

UNIVERSIDAD DE BURGOS
ESCUELA POLITÉCNICA SUPERIOR

AUTORES DEL PROYECTO:
D. Alfonso Cid González
Dña. Raquel Estrada Merino
D. Sergio Agustín Ratón Alomar
Dña. Miriam Sacristán Terradillos

PROYECTO FIN DE CARRERA:

PUENTE EN EL PASO DE BOPAL SOBRE EL RÍO GRANDE DE MATAGALPA (NICARAGUA)

TUTOR DEL PROYECTO:
D. Juan Manual Manso Villalaín

FECHA: Febrero de 2012

TITULO DEL PLANO: ESTRIBOS. GEOMETRÍA DEL ESTRIBO 2

ESCALA: 1/100 (0 1 2 3 m)

PLANO: 3.4.1

HOJA: 2 de 2

SECCIÓN DEL ESTRIBO 1

Cotas en metros

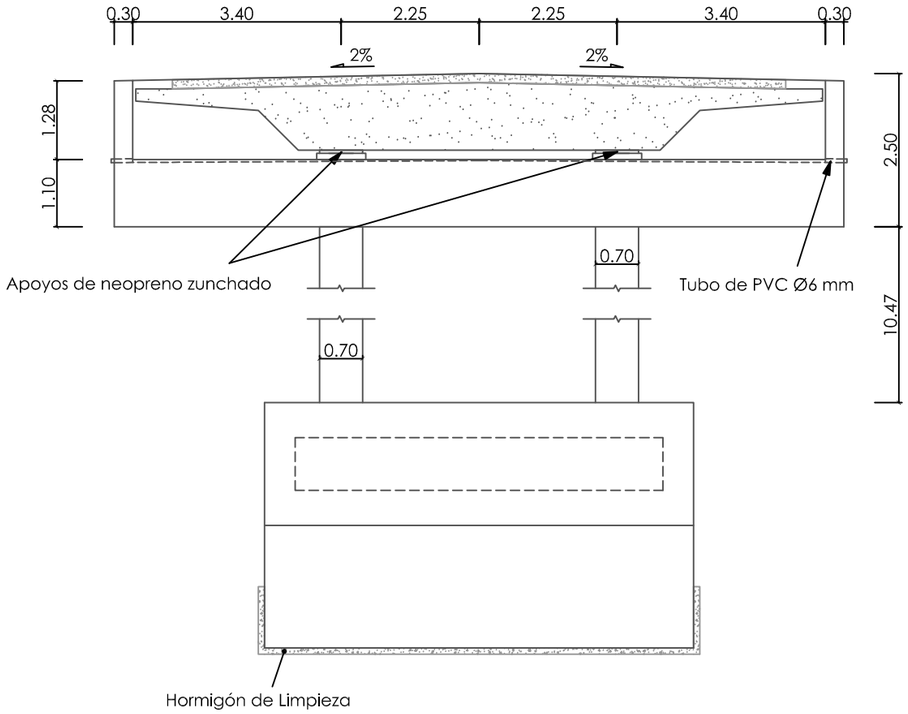

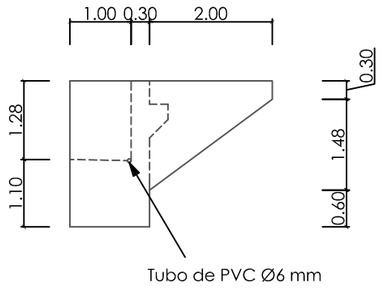

SECCIÓN DEL CORTE A-A'

E: 1/75

Cotas en metros

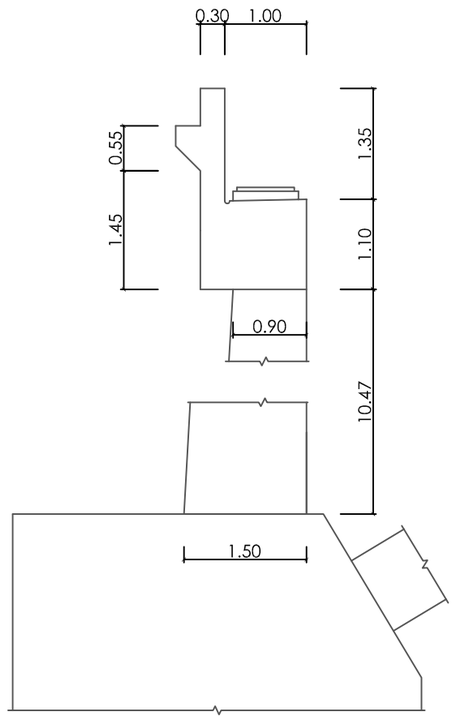

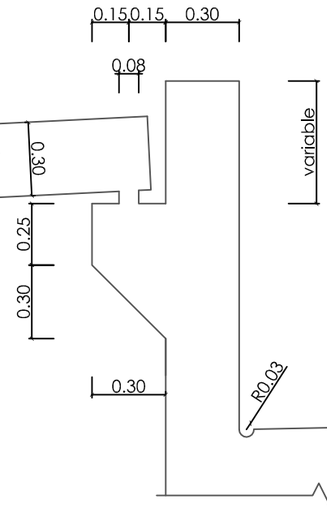

DETALLE DE LA MENSULA

E: 1/25

Cotas en metros

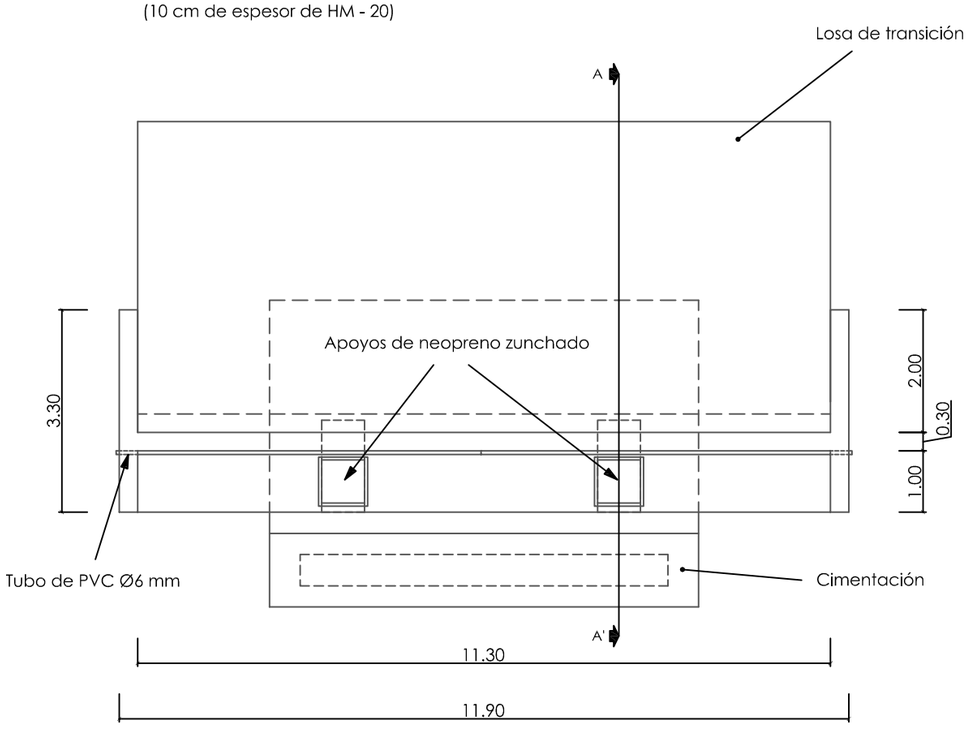

DIAMETROS DE BARRAS CORRUGADAS DE REFUERZO	
Diametros (mm)	Diametros (")
Ø12	Nº4 1/2"
Ø14	Nº5 5/8"
Ø16	Nº6 3/4"
Ø20	Nº7 7/8"
Ø25	Nº8 1"
	Nº9 1-1/8"
Ø32	Nº10 1-1/4"

CUADRO DE CARACTERÍSTICAS SEGÚN EL EUROCODIGO

HORMIGÓN	LOCALIZACIÓN	RESISTENCIA/ CONSISTENCIA/ Ømáx. ÁRIDO/ AMBIENTE	fck N/mm2	NIVEL DE CONTROL	COEF. DE SEGURIDAD Yc
	LIMPIEZA	HM-20 / P / 25	20 (3000 PSI)		
	CIMENTACION	HA-30 / P / 20 / XC2	30 (4500 PSI)	NORMAL	1,50
	ALZADOS	HA-30 / P / 20 / XC2	30 (4500 PSI)	NORMAL	1,50
ARMADURA	TIPO	DESIGNACIÓN	LÍMITE ELÁSTICO fyk N/mm2	NIVEL DE CONTROL	COEF. DE SEGURIDAD Ys
	ACERO PASIVO	B 400 S (Grado 60)	400	NORMAL	1,15
RECUBRIMIENTO NOMINAL		RECUBRIMIENTO MÍNIMO	Cimentaciones: 40 mm 30 mm	VIDA ÚTIL DE LA ESTRUCTURA: 100 años CONTROL DE LA EJECUCIÓN NORMAL	
		Δr	10 mm		
NOTAS	LA DISTANCIA ENTRE CUALQUIER ARMADURA PASIVA Y EL PARAMETRO MAS PROXIMO NO SERA INFERIOR AL VALOR INDICADO. PARA GARANTIZARLO, SE EMPLEARAN LOS OPORTUNOS SEPARADORES.				

UNIVERSIDAD DE BURGOS
ESCUELA POLITÉCNICA SUPERIOR

AUTORES DEL PROYECTO:
D. Alfonso Cid González
Dña. Raquel Estrada Merino
D. Sergio Agustín Ratón Alomar
Dña. Miriam Sacristán Terradillos

PROYECTO FIN DE CARRERA:

PUENTE EN EL PASO DE BOPAL SOBRE EL RÍO GRANDE DE MATAGALPA (NICARAGUA)

TUTOR DEL PROYECTO:
D. Juan Manual Manso Villalaín

FECHA: Febrero de 2012

TITULO DEL PLANO: ESTRIBOS. GEOMETRÍA DEL ESTRIBO 1

ESCALA: 1/100 (0 1 2 3 m)

PLANO: 3.4.1

HOJA: 1 de 2

SECCIÓN TRANSVERSAL DEL ESTRIBO 1

E: 1/50

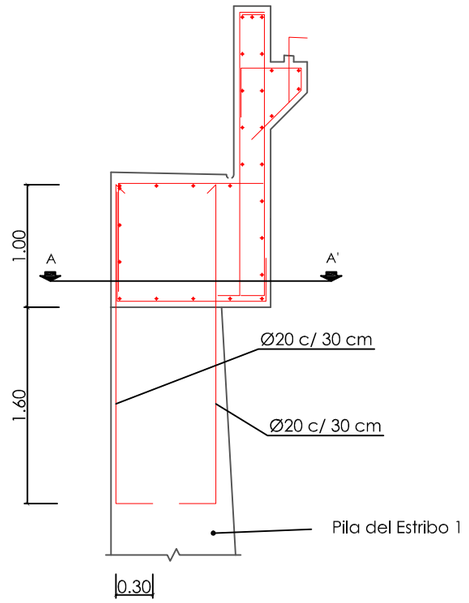

El armado de ambos estribos se detalla en la sección transversal en apoyos

SECCIÓN TRANSVERSAL EN APOYOS

E: 1/25

Cotas en metros

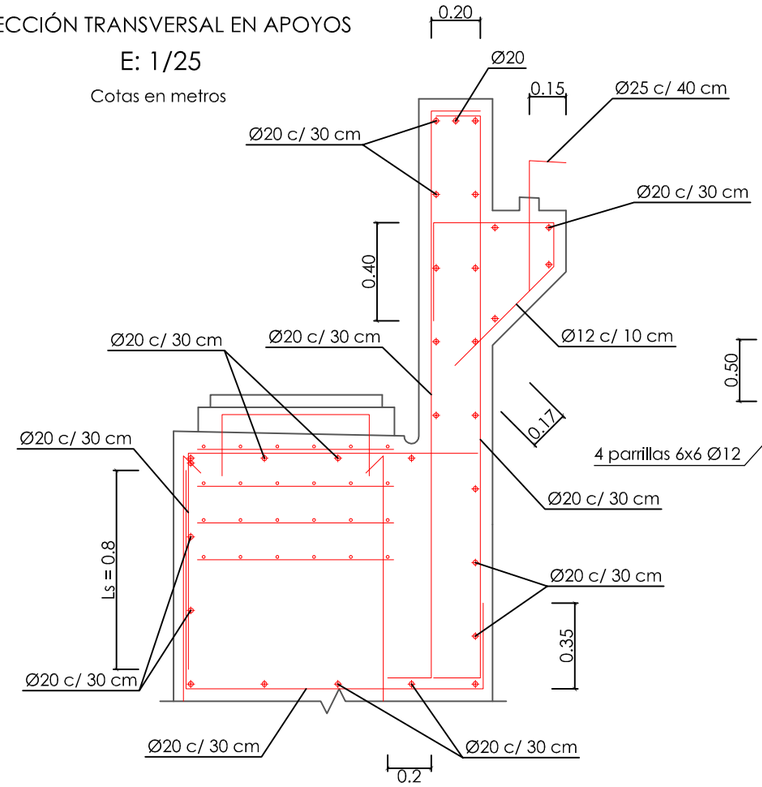

ARMADO EN APOYOS

E: 1/50

Cotas en metros

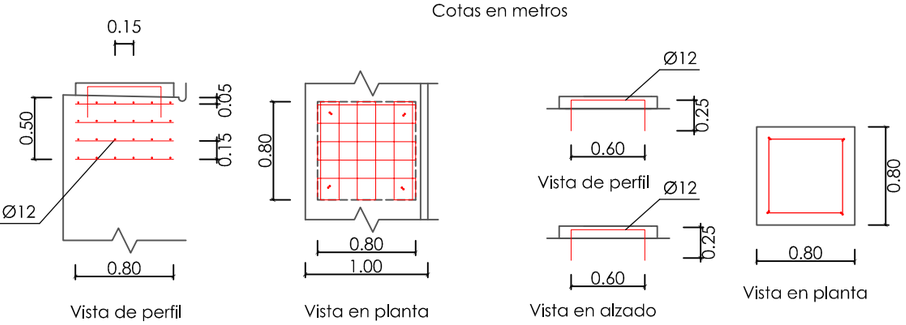

SECCIÓN A-A'

E: 1/50

Cotas en metros

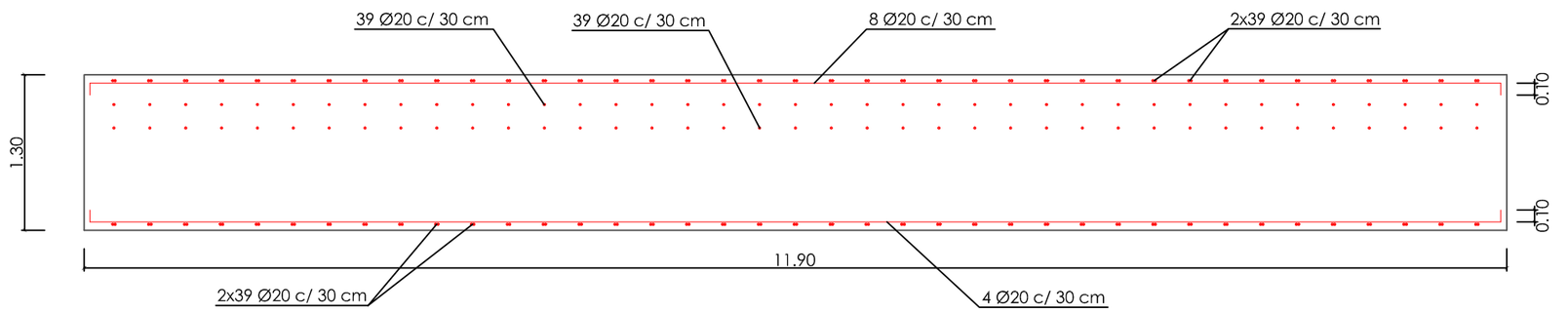

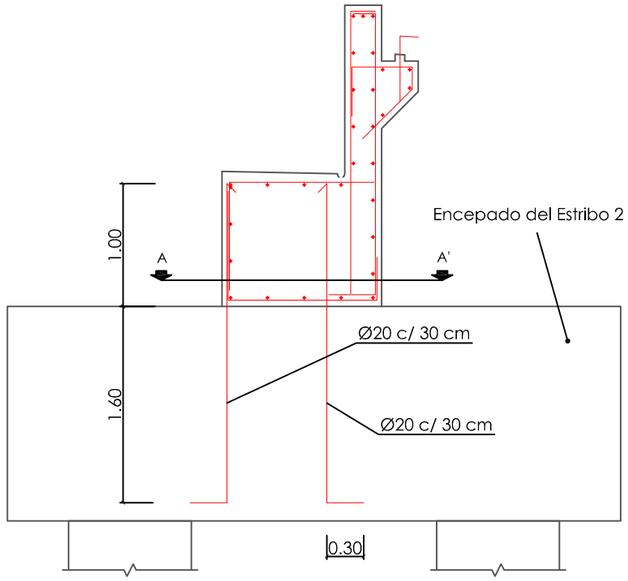

SECCIÓN TRANSVERSAL DEL ESTRIBO 2

E: 1/50

Cotas en metros

DIAMETROS DE BARRAS CORRUGADAS DE REFUERZO	
Diametros (mm)	Diametros (")
Ø12	Nº4 1/2"
Ø14	Nº5 5/8"
Ø16	Nº6 3/4"
Ø20	Nº7 7/8"
Ø25	Nº8 1"
	Nº9 1-1/8"
Ø32	Nº10 1-1/4"

CUADRO DE CARACTERÍSTICAS SEGÚN EL EUROCODIGO

HORMIGÓN	LOCALIZACIÓN	RESISTENCIA/ CONSISTENCIA/ Ømáx. ÁRIDO/ AMBIENTE	fck N/mm2	NIVEL DE CONTROL	COEF. DE SEGURIDAD Yc
	LIMPIEZA	HM-20 / P / 25	20 (3000 PSI)		
	CIMENTACION	HA-30 / P / 20 / XC2	30 (4500 PSI)	NORMAL	1,50
	ALZADOS	HA-30 / P / 20 / XC2	30 (4500 PSI)	NORMAL	1,50
ARMADURA	TIPO	DESIGNACIÓN	LÍMITE ELÁSTICO fyk N/mm2	NIVEL DE CONTROL	COEF. DE SEGURIDAD Ys
	ACERO PASIVO	B 400 S (Grado 60)	400	NORMAL	1,15
RECUBRIMIENTO NOMINAL		RECUBRIMIENTO MÍNIMO	Cimentaciones: 40 mm	VIDA ÚTIL DE LA ESTRUCTURA: 100 años	
			30 mm	CONTROL DE LA EJECUCIÓN NORMAL	
		Δr	10 mm		
NOTAS	LA DISTANCIA ENTRE CUALQUIER ARMADURA PASIVA Y EL PARAMETRO MAS PROXIMO NO SERA INFERIOR AL VALOR INDICADO. PARA GARANTIZARLO, SE EMPLEARAN LOS OPORTUNOS SEPARADORES.				

UNIVERSIDAD DE BURGOS
ESCUELA POLITÉCNICA SUPERIOR

AUTORES DEL PROYECTO:
D. Alfonso Cid González
Dña. Raquel Estrada Merino
D. Sergio Agustín Ratón Alomar
Dña. Miriam Sacristán Terradillos

PROYECTO FIN DE CARRERA:

PUENTE EN EL PASO DE BOPAL SOBRE EL RÍO GRANDE DE MATAGALPA (NICARAGUA)

TUTOR DEL PROYECTO:
D. Juan Manual Manso Villalaín

FECHA: Febrero de 2012

TITULO DEL PLANO: ESTRIBOS. ARMADO DEL ESTRIBO

ESCALA: 1/50 (0 0,5 1,0 1,5 m)

PLANO: 3.4.2

HOJA: 1 de 4

ARMADO DE ALETAS DEL ESTRIBO
E: 1/25

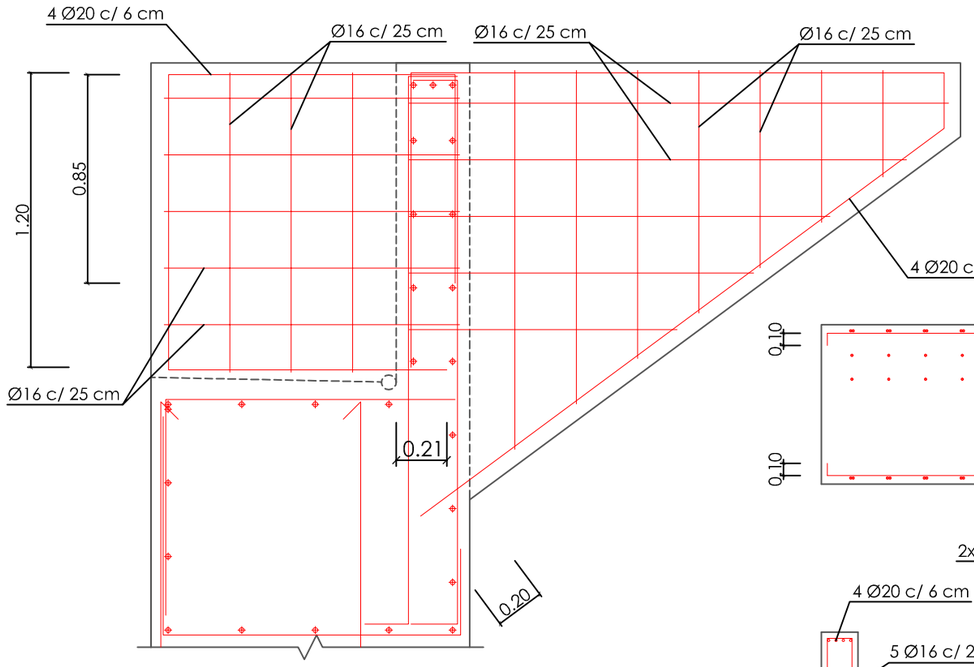

SECCIÓN A-A'
E: 1/50

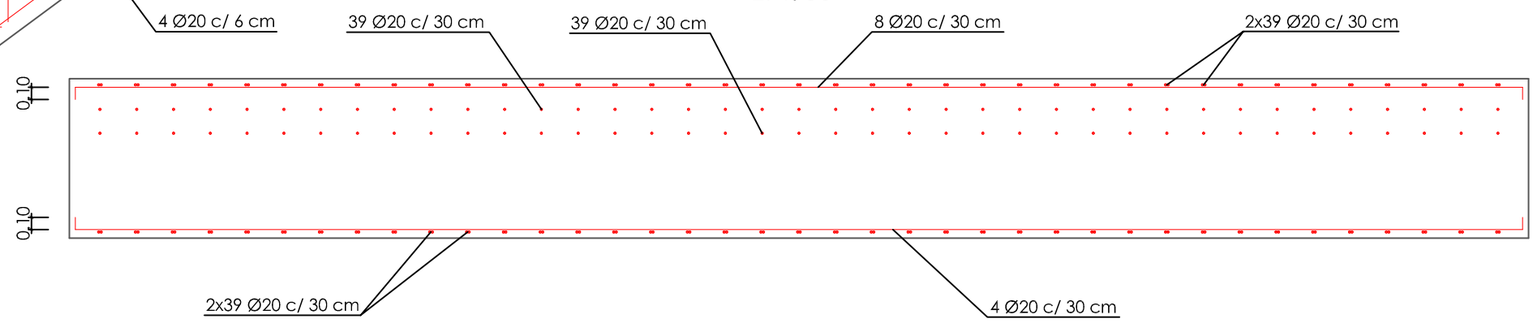

SECCIÓN B-B'
E: 1/50

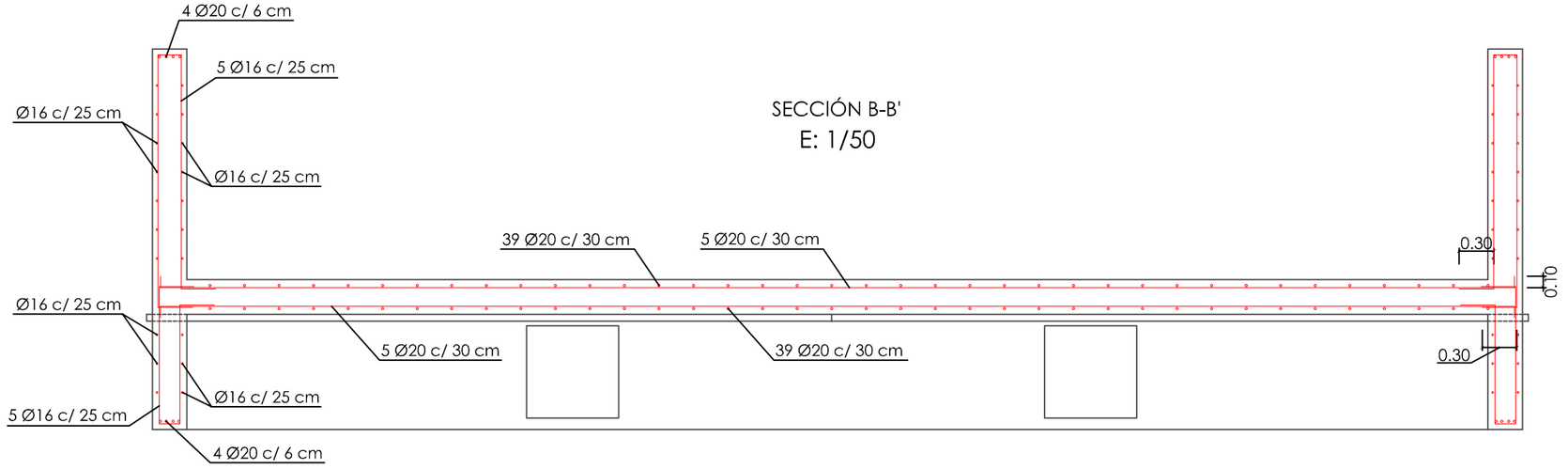

ARMADO PARRILLA INTRASDOS DEL ESTRIBO
E: 1/25

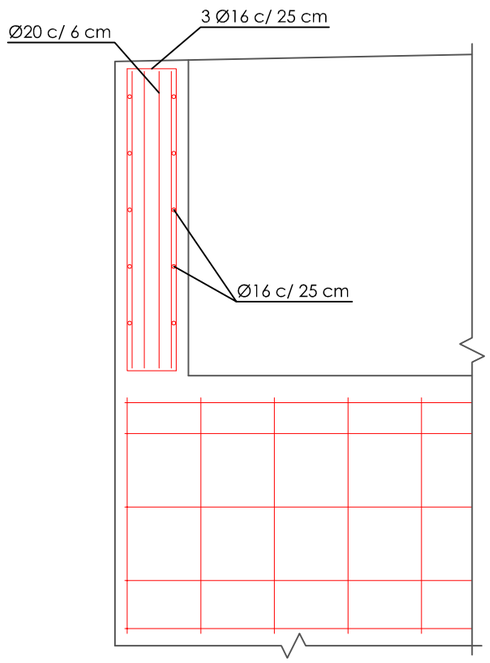

DIAMETROS DE BARRAS CORRUGADAS DE REFUERZO	
Diametros (mm)	Diametros (")
Ø12	Nº4 1/2"
Ø14	Nº5 5/8"
Ø16	Nº6 3/4"
Ø20	Nº7 7/8"
Ø25	Nº8 1"
	Nº9 1-1/8"
Ø32	Nº10 1-1/4"

CUADRO DE CARACTERÍSTICAS SEGÚN EL EUROCODIGO

HORMIGÓN	LOCALIZACIÓN	RESISTENCIA/ CONSISTENCIA/ Ømáx. ÁRIDO/ AMBIENTE	fck N/mm2	NIVEL DE CONTROL	COEF. DE SEGURIDAD Yc
	LIMPIEZA	HM-20 / P / 25	20 (3000 PSI)		
	CIMENTACION	HA-30 / P / 20 / XC2	30 (4500 PSI)	NORMAL	1,50
	ALZADOS	HA-30 / P / 20 / XC2	30 (4500 PSI)	NORMAL	1,50
ARMADURA	TIPO	DESIGNACIÓN	LÍMITE ELÁSTICO fyk N/mm2	NIVEL DE CONTROL	COEF. DE SEGURIDAD Ys
	ACERO PASIVO	B 400 S (Grado 60)	400	NORMAL	1,15
RECUBRIMIENTO NOMINAL	RECUBRIMIENTO MÍNIMO	Cimentaciones: 40 mm	VIDA ÚTIL DE LA ESTRUCTURA: 100 años		
		30 mm	CONTROL DE LA EJECUCIÓN NORMAL		
	Δr	10 mm			
NOTAS	LA DISTANCIA ENTRE CUALQUIER ARMADURA PASIVA Y EL PARAMETRO MAS PROXIMO NO SERA INFERIOR AL VALOR INDICADO. PARA GARANTIZARLO, SE EMPLEARAN LOS OPORTUNOS SEPARADORES.				

UNIVERSIDAD DE BURGOS
ESCUELA POLITÉCNICA SUPERIOR

AUTORES DEL PROYECTO:
D. Alfonso Cid González
Dña. Raquel Estrada Merino
D. Sergio Agustín Ratón Alomar
Dña. Miriam Sacristán Terradillos

PROYECTO FIN DE CARRERA:

PUENTE EN EL PASO DE BOPAL SOBRE EL RÍO GRANDE DE MATAGALPA (NICARAGUA)

TUTOR DEL PROYECTO:
D. Juan Manual Manso Villalaín

FECHA: Febrero de 2012

TITULO DEL PLANO: ESTRIBOS. ARMADO DE ALETAS

ESCALA: 1/50 (0 – 0,5 – 1,0 – 1,5 m)

PLANO: 3.4.2

HOJA: 2 de 4

PLANTA DE LA LOSA DE TRANSICIÓN

E: 1/100

Cotas en metros

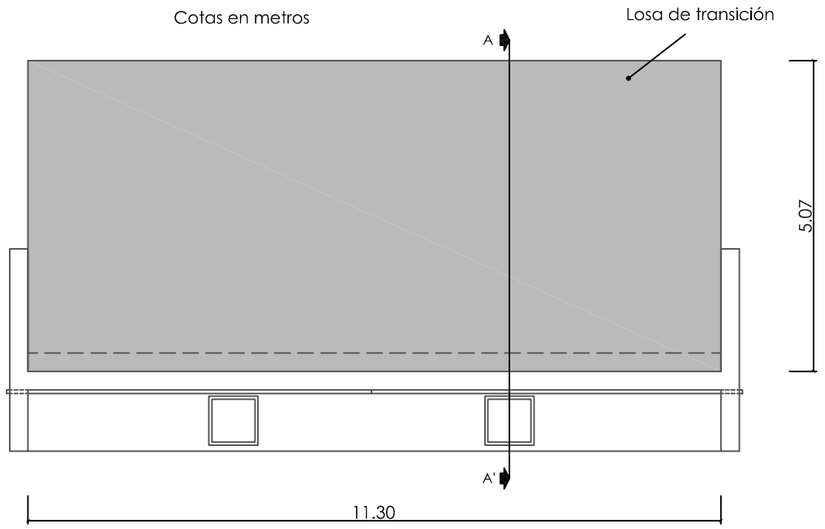

ARMADO DE LA LOSA DE TRANSICIÓN

E: 1/25

Cotas en metros

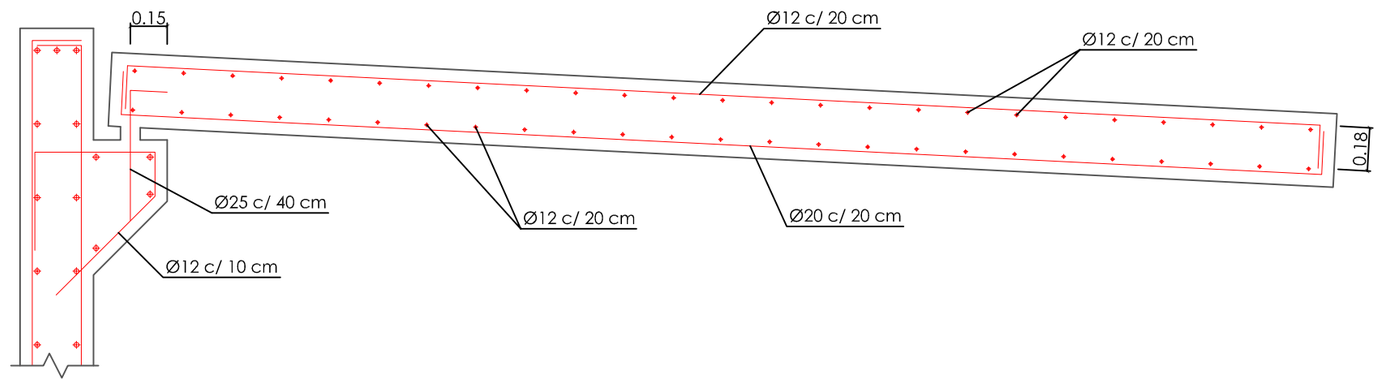

ARMADO DE LA LOSA DE TRANSICIÓN

E: 1/75

Cotas en metros

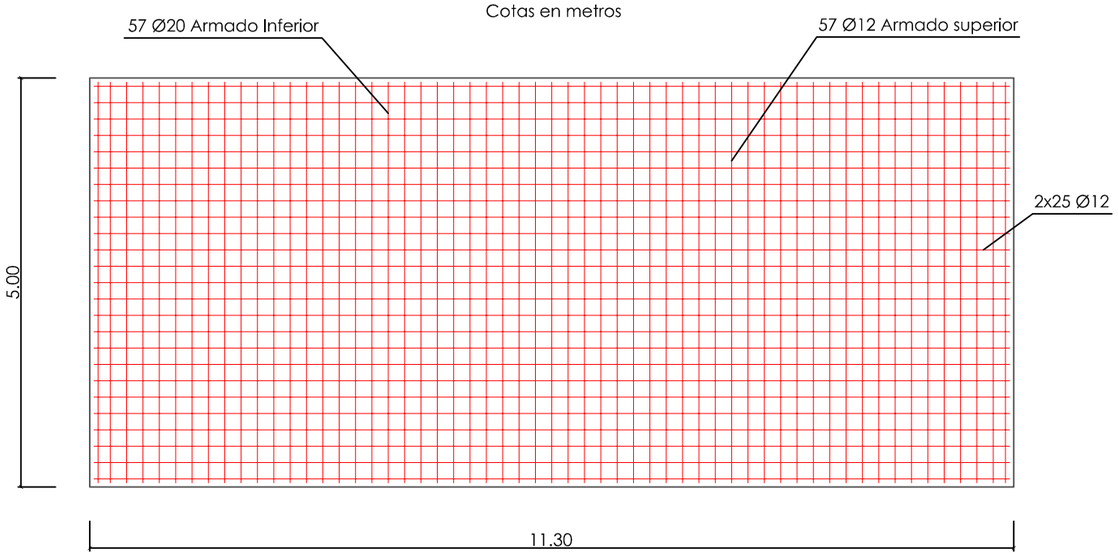

SECCIÓN TRANSVERSAL DE LA LOSA DE TRANSICIÓN

E: 1/50

Cotas en metros

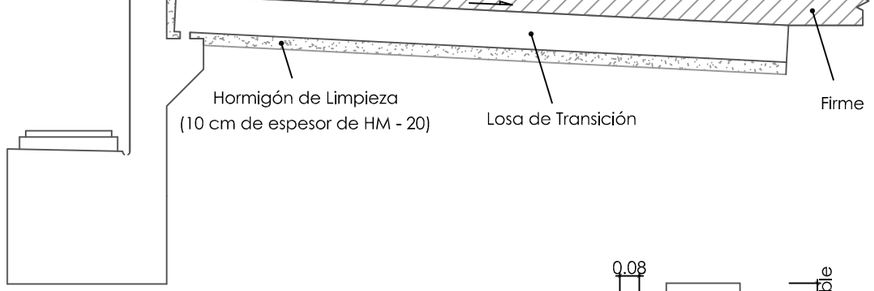

DETALLE DE LA LOSA

E: 1/25

Cotas en metros

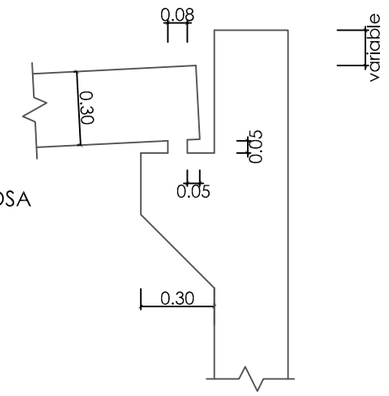

DIAMETROS DE BARRAS CORRUGADAS DE REFUERZO	
Diametros (mm)	Diametros (")
Ø12	Nº4 1/2"
Ø14	Nº5 5/8"
Ø16	Nº6 3/4"
Ø20	Nº7 7/8"
Ø25	Nº8 1"
	Nº9 1-1/8"
Ø32	Nº10 1-1/4"

CUADRO DE CARACTERÍSTICAS SEGÚN EL EUROCODIGO

HORMIGÓN	LOCALIZACIÓN	RESISTENCIA/ CONSISTENCIA/ Ømáx. ÁRIDO/ AMBIENTE	fck N/mm2	NIVEL DE CONTROL	COEF. DE SEGURIDAD Yc
	LIMPIEZA	HM-20 / P / 25	20 (3000 PSI)		
	CIMENTACION	HA-30 / P / 20 / XC2	30 (4500 PSI)	NORMAL	1,50
	ALZADOS	HA-30 / P / 20 / XC2	30 (4500 PSI)	NORMAL	1,50
ARMADURA	TIPO	DESIGNACIÓN	LÍMITE ELÁSTICO fyk N/mm2	NIVEL DE CONTROL	COEF. DE SEGURIDAD Ys
	ACERO PASIVO	B 400 S (Grado 60)	400	NORMAL	1,15
RECUBRIMIENTO NOMINAL		RECUBRIMIENTO MÍNIMO	Cimentaciones: 40 mm	VIDA ÚTIL DE LA ESTRUCTURA: 100 años	
			30 mm	CONTROL DE LA EJECUCIÓN NORMAL	
		Δr	10 mm		
NOTAS	LA DISTANCIA ENTRE CUALQUIER ARMADURA PASIVA Y EL PARAMETRO MAS PROXIMO NO SERA INFERIOR AL VALOR INDICADO. PARA GARANTIZARLO, SE EMPLEARAN LOS OPORTUNOS SEPARADORES.				

UNIVERSIDAD DE BURGOS
ESCUELA POLITÉCNICA SUPERIOR

AUTORES DEL PROYECTO:
D. Alfonso Cid González
Dña. Raquel Estrada Merino
D. Sergio Agustín Ratón Alomar
Dña. Miriam Sacristán Terradillos

PROYECTO FIN DE CARRERA:

PUENTE EN EL PASO DE BOPAL SOBRE EL RÍO GRANDE DE MATAGALPA (NICARAGUA)

TUTOR DEL PROYECTO:
D. Juan Manual Manso Villalaín

FECHA: Febrero de 2012

TITULO DEL PLANO: ESTRIBOS. ARMADO LOSA DE TRANSICIÓN

ESCALA: 1/25 (0 0.25 0.5 0.75 m)

PLANO: 3.4.2

HOJA: 3 de 4

SECCIÓN LONGITUDINAL PILA ESTRIBO

E: 1/75

Cotas en metros

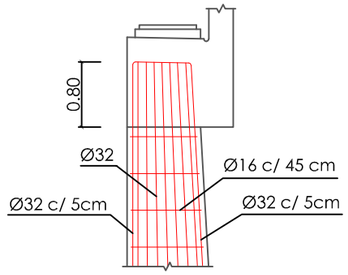

SECCIÓN TRANSVERSAL PILA ESTRIBO

E: 1/75

Cotas en metros

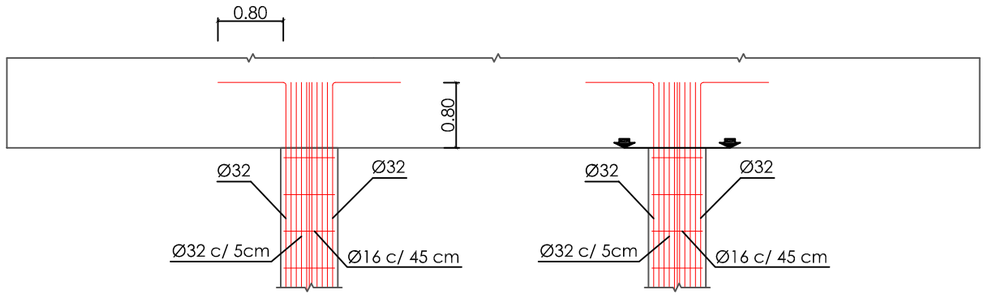

Sección A-A'

SECCIÓN SUPERIOR PILA DEL ESTRIBO

E: 1/25

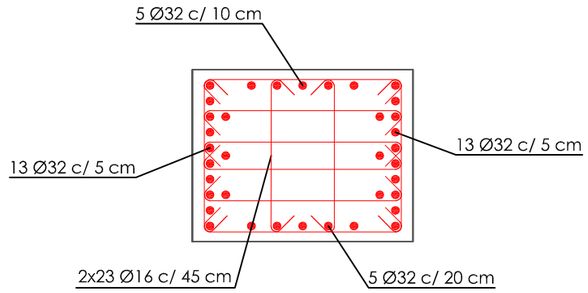

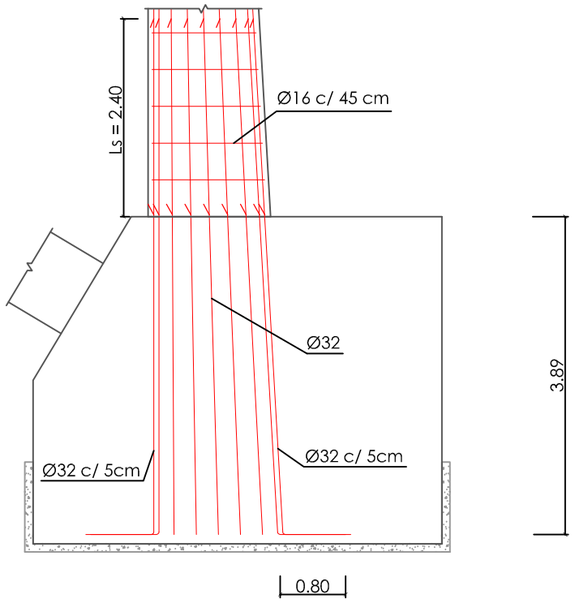

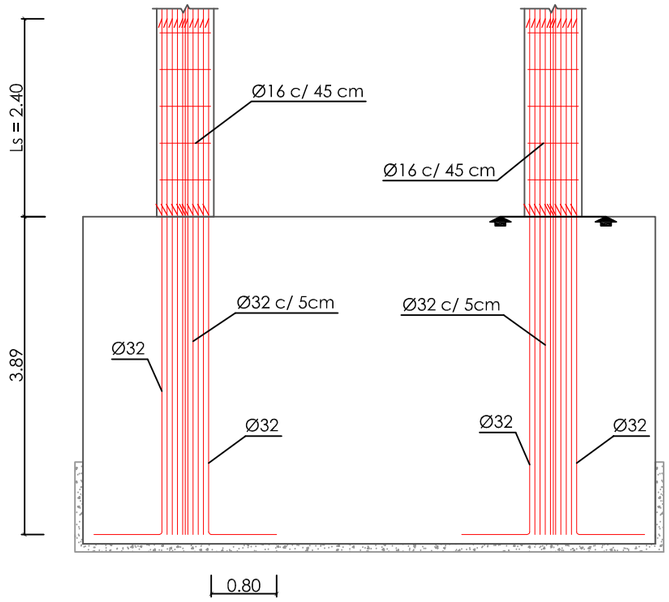

Sección B-B'

SECCIÓN INFERIOR PILA DEL ESTRIBO

E: 1/25

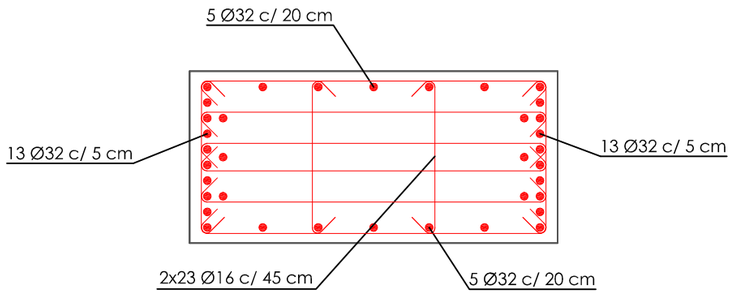

DIAMETROS DE BARRAS CORRUGADAS DE REFUERZO	
Diametros (mm)	Diametros (")
Ø12	Nº4 1/2"
Ø14	Nº5 5/8"
Ø16	Nº6 3/4"
Ø20	Nº7 7/8"
Ø25	Nº8 1"
	Nº9 1-1/8"
Ø32	Nº10 1-1/4"

CUADRO DE CARACTERÍSTICAS SEGÚN EL EUROCODIGO

HORMIGÓN	LOCALIZACIÓN	RESISTENCIA/ CONSISTENCIA/ Ømáx. ÁRIDO/ AMBIENTE	fck N/mm2	NIVEL DE CONTROL	COEF. DE SEGURIDAD Yc
	LIMPIEZA	HM-20 / P / 25	20 (3000 PSI)		
	CIMENTACION	HA-30 / P / 20 / XC2	30 (4500 PSI)	NORMAL	1,50
	ALZADOS	HA-30 / P / 20 / XC2	30 (4500 PSI)	NORMAL	1,50
ARMADURA	TIPO	DESIGNACIÓN	LÍMITE ELÁSTICO fyk N/mm2	NIVEL DE CONTROL	COEF. DE SEGURIDAD Ys
	ACERO PASIVO	B 400 S (Grado 60)	400	NORMAL	1,15
RECUBRIMIENTO NOMINAL		RECUBRIMIENTO MÍNIMO	Cimentaciones: 40 mm 30 mm	VIDA ÚTIL DE LA ESTRUCTURA: 100 años CONTROL DE LA EJECUCIÓN NORMAL	
		Δr	10 mm		
NOTAS	LA DISTANCIA ENTRE CUALQUIER ARMADURA PASIVA Y EL PARAMETRO MAS PROXIMO NO SERA INFERIOR AL VALOR INDICADO. PARA GARANTIZARLO, SE EMPLEARAN LOS OPORTUNOS SEPARADORES.				

UNIVERSIDAD DE BURGOS
ESCUELA POLITÉCNICA SUPERIOR

AUTORES DEL PROYECTO:
D. Alfonso Cid González
Dña. Raquel Estrada Merino
D. Sergio Agustín Ratón Alomar
Dña. Miriam Sacristán Terradillos

PROYECTO FIN DE CARRERA:

PUENTE EN EL PASO DE BOPAL SOBRE EL RÍO GRANDE DE MATAGALPA (NICARAGUA)

TUTOR DEL PROYECTO:
D. Juan Manual Manso Villalaín

FECHA: Febrero de 2012

TITULO DEL PLANO: ESTRIBOS. ARMADO PILAS DEL ESTRIBO 1

ESCALA: Varias

PLANO: 3.4.2

HOJA: 4 de 4

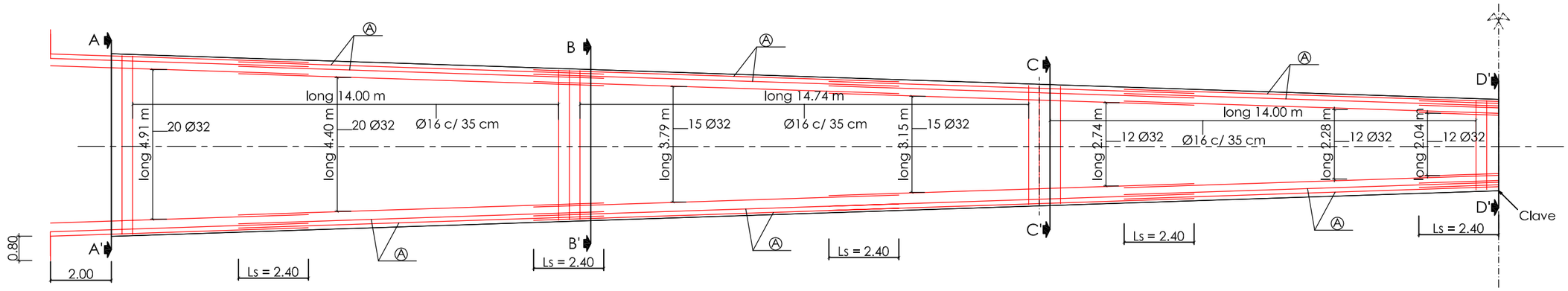

Armado de media sección del arco

PLANTA DE LA DIRECTRIZ DEL ARCO

E: 1/150

El armado del arco es simétrico.
(los ejes de simetría se encuentran en la clave)

DIAMETROS DE BARRAS CORRUGADAS DE REFUERZO	
Diametros (mm)	Diametros (")
Ø12	Nº4 1/2"
Ø14	Nº5 5/8"
Ø16	Nº6 3/4"
Ø20	Nº7 7/8"
Ø25	Nº8 1"
	Nº9 1-1/8"
Ø32	Nº10 1-1/4"

CUADRO DE CARACTERÍSTICAS SEGÚN EL EUROCODIGO

HORMIGÓN	LOCALIZACIÓN	RESISTENCIA/ CONSISTENCIA/ Ømáx. ÁRIDO/ AMBIENTE	fck N/mm2	NIVEL DE CONTROL	COEF. DE SEGURIDAD Yc
	LIMPIEZA	HM-20 / P / 25	20 (3000 PSI)		
	CIMENTACION	HA-30 / P / 20 / XC2	30 (4500 PSI)	NORMAL	1,50
	ALZADOS	HA-30 / P / 20 / XC2	30 (4500 PSI)	NORMAL	1,50
ARMADURA	TIPO	DESIGNACIÓN	LÍMITE ELÁSTICO fyk N/mm2	NIVEL DE CONTROL	COEF. DE SEGURIDAD Ys
	ACERO PASIVO	B 400 S (Grado 60)	400	NORMAL	1,15
RECUBRIMIENTO NOMINAL		RECUBRIMIENTO MÍNIMO	Cimentaciones: 40 mm 30 mm	VIDA ÚTIL DE LA ESTRUCTURA: 100 años CONTROL DE LA EJECUCIÓN NORMAL	
		Δr	10 mm		
NOTAS	LA DISTANCIA ENTRE CUALQUIER ARMADURA PASIVA Y EL PARAMETRO MAS PROXIMO NO SERA INFERIOR AL VALOR INDICADO. PARA GARANTIZARLO, SE EMPLEARAN LOS OPORTUNOS SEPARADORES.				

UNIVERSIDAD DE BURGOS
ESCUELA POLITÉCNICA SUPERIOR

AUTORES DEL PROYECTO:
D. Alfonso Cid González
Dña. Raquel Estrada Merino
D. Sergio Agustín Ratón Alomar
Dña. Miriam Sacristán Terradillos

PROYECTO FIN DE CARRERA:

PUENTE EN EL PASO DE BOPAL SOBRE EL RÍO GRANDE DE MATAGALPA (NICARAGUA)

TUTOR DEL PROYECTO:
D. Juan Manual Manso Villalaín

FECHA: Febrero de 2012

TITULO DEL PLANO: ARCO. ARMADO DEL ARCO

ESCALA: 1/150 (0 15 30 45 m)

PLANO: 3.5.1

HOJA: 1 de 2

SECCIONES TRANSVERSALES DEL ARCO
E: 1/50

SECCIÓN A-A'

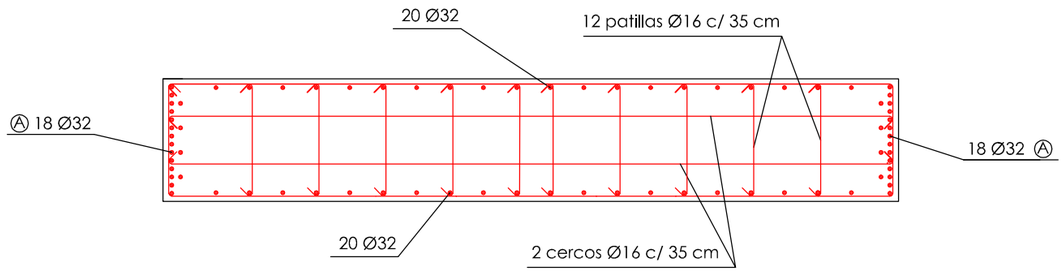

SECCIÓN B-B'

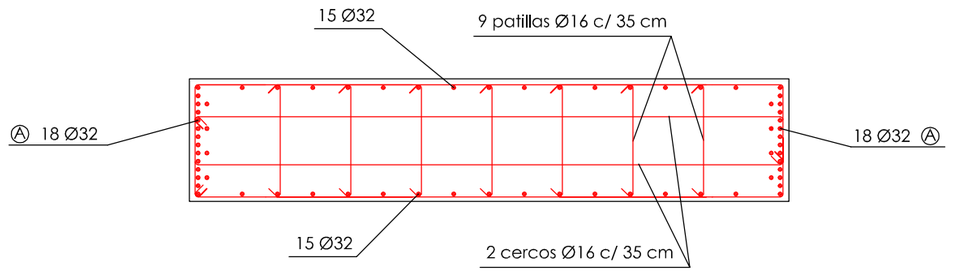

SECCIÓN C-C'

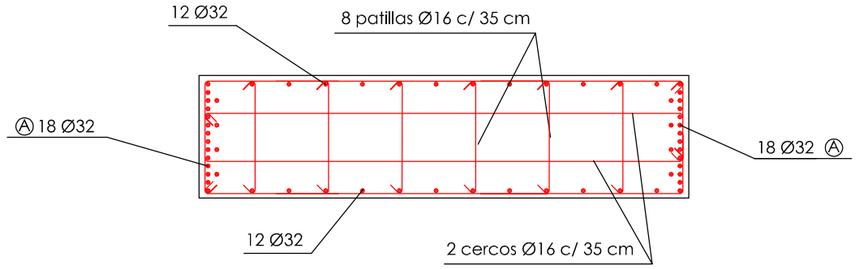

SECCIÓN D-D'

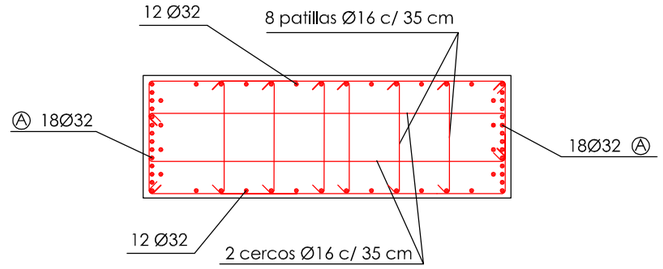

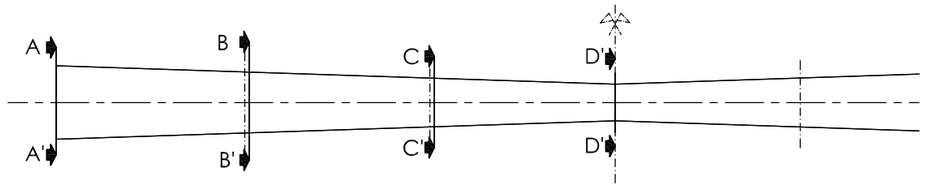

PLANTA DE LA DIRECTRIZ DEL ARCO
E: 1/500

DIAMETROS DE BARRAS CORRUGADAS DE REFUERZO	
Diametros (mm)	Diametros (")
Ø12	Nº4 1/2"
Ø14	Nº5 5/8"
Ø16	Nº6 3/4"
Ø20	Nº7 7/8"
Ø25	Nº8 1"
	Nº9 1-1/8"
Ø32	Nº10 1-1/4"

CUADRO DE CARACTERÍSTICAS SEGÚN EL EUROCODIGO

HORMIGÓN	LOCALIZACIÓN	RESISTENCIA/ CONSISTENCIA/ Ømáx. ÁRIDO/ AMBIENTE	fck N/mm2	NIVEL DE CONTROL	COEF. DE SEGURIDAD Yc
	LIMPIEZA	HM-20 / P / 25	20 (3000 PSI)		
	CIMENTACION	HA-30 / P / 20 / XC2	30 (4500 PSI)	NORMAL	1,50
	ALZADOS	HA-30 / P / 20 / XC2	30 (4500 PSI)	NORMAL	1,50
ARMADURA	TIPO	DESIGNACIÓN	LÍMITE ELÁSTICO fyk N/mm2	NIVEL DE CONTROL	COEF. DE SEGURIDAD Ys
	ACERO PASIVO	B 400 S (Grado 60)	400	NORMAL	1,15
RECUBRIMIENTO NOMINAL		RECUBRIMIENTO MÍNIMO	Cimentaciones: 40 mm	VIDA ÚTIL DE LA ESTRUCTURA: 100 años	
			30 mm		
		Δr	10 mm	CONTROL DE LA EJECUCIÓN NORMAL	
NOTAS	LA DISTANCIA ENTRE CUALQUIER ARMADURA PASIVA Y EL PARAMETRO MAS PROXIMO NO SERA INFERIOR AL VALOR INDICADO. PARA GARANTIZARLO, SE EMPLEARAN LOS OPORTUNOS SEPARADORES.				

UNIVERSIDAD DE BURGOS
ESCUELA POLITÉCNICA SUPERIOR

AUTORES DEL PROYECTO:
D. Alfonso Cid González
Dña. Raquel Estrada Merino
D. Sergio Agustín Ratón Alomar
Dña. Miriam Sacristán Terradillos

PROYECTO FIN DE CARRERA:
PUENTE EN EL PASO DE BOPAL SOBRE EL RÍO GRANDE DE MATAGALPA (NICARAGUA)

TUTOR DEL PROYECTO:
D. Juan Manual Manso Villalaín

FECHA: Febrero de 2012

TITULO DEL PLANO: ARCO. ARMADO DE LAS SECCIONES TRANSVERSALES

ESCALA: 1/50 (0 – 0,5 – 1,0 – 1,5 m)

PLANO: 3.5.1

HOJA: 2 de 2

SECCIÓN PILA 3
E: 1/50
Cotas en metros

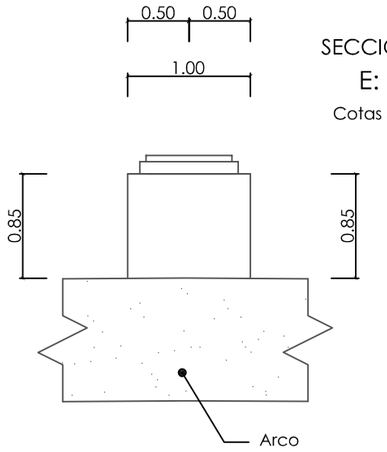

Vista de perfil

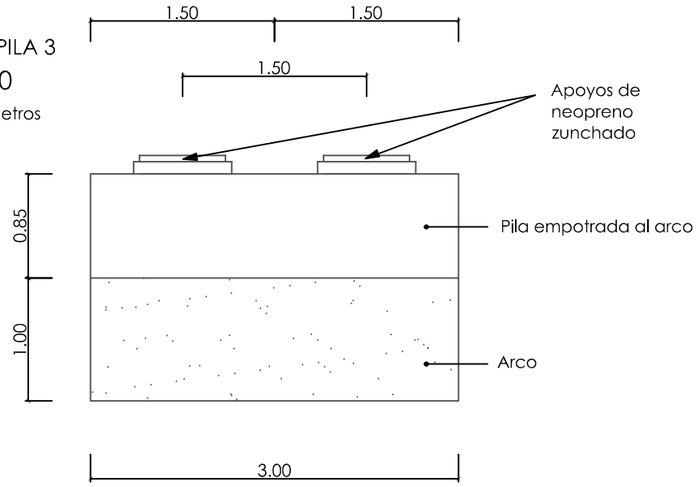

Vista en alzado de la directriz

SECCIÓN PILA 1 y 5
E: 1/50
Cotas en metros

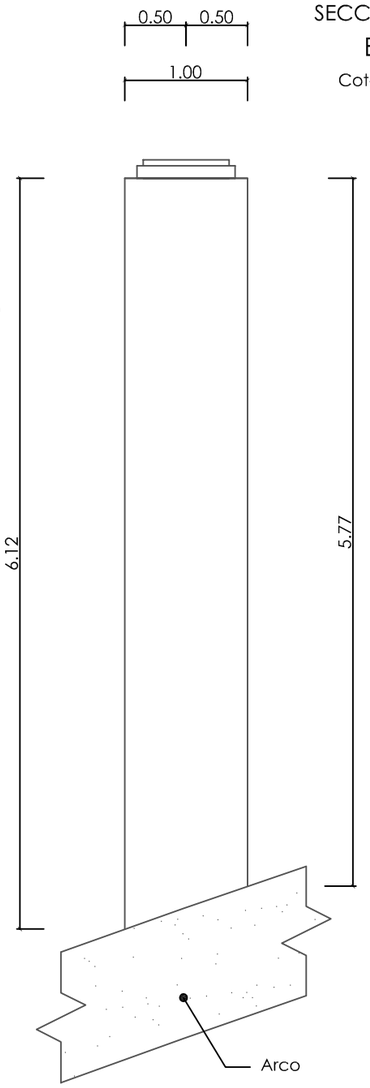

Vista de perfil

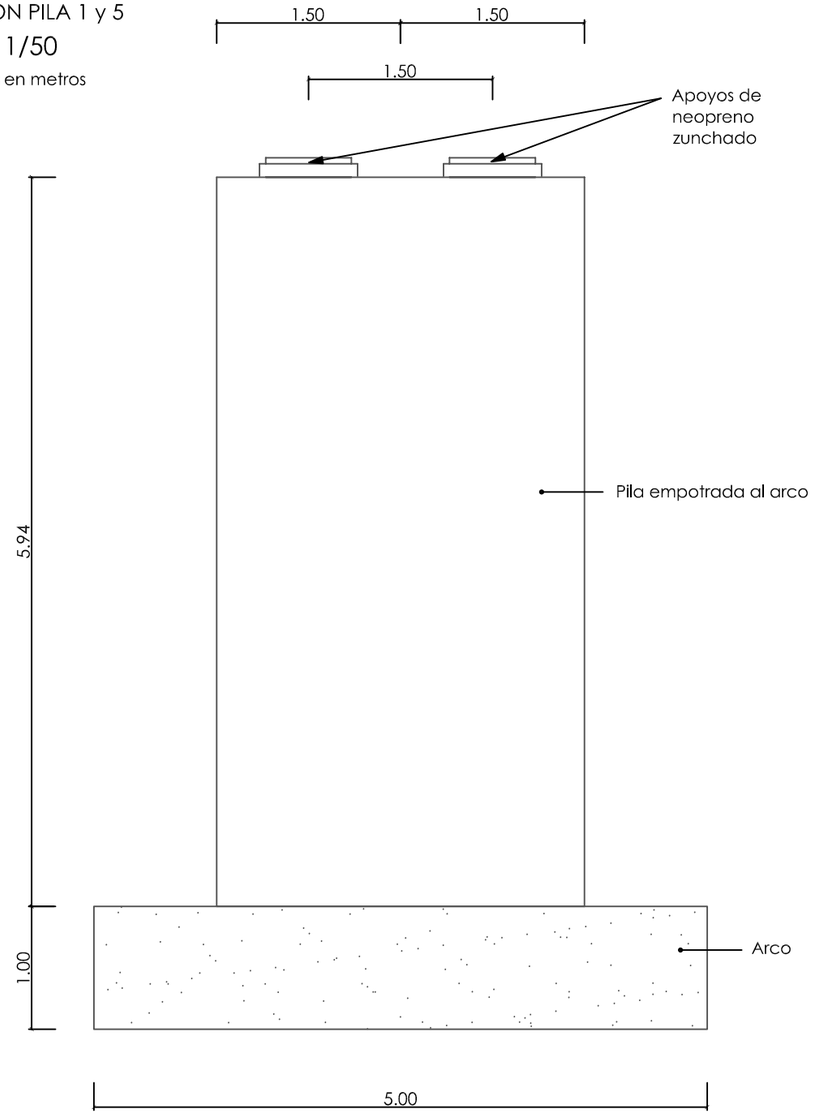

Vista en alzado de la directriz

SECCIÓN PILA 2 y 4
E: 1/50
Cotas en metros

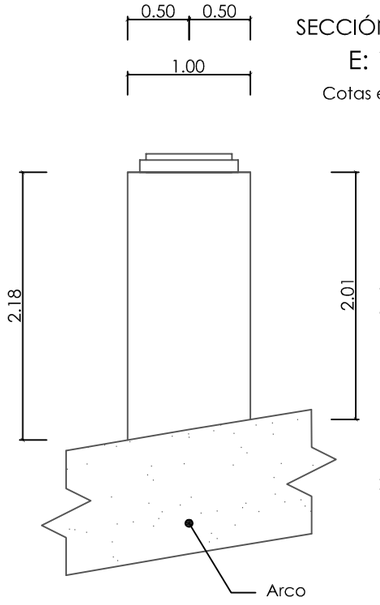

Vista de perfil

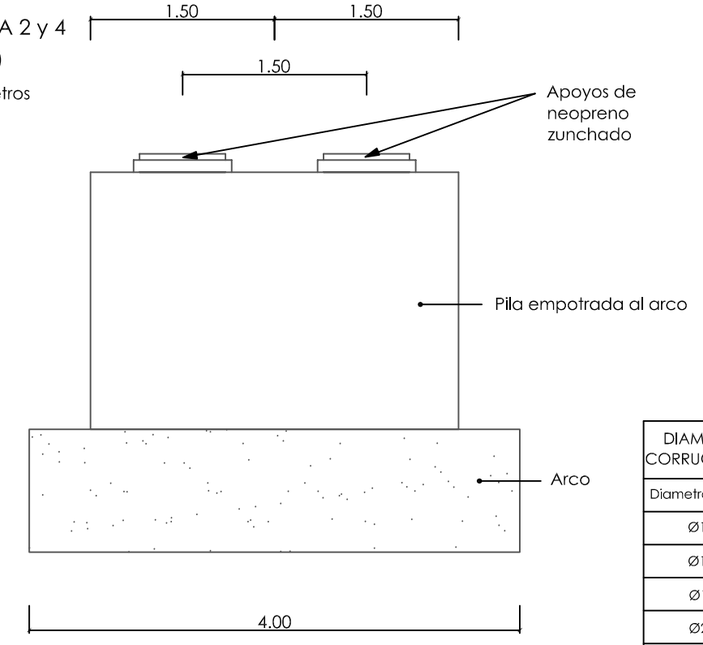

Vista en alzado de la directriz

DIAMETROS DE BARRAS CORRUGADAS DE REFUERZO	
Diametros (mm)	Diametros (")
Ø12	Nº4 1/2"
Ø14	Nº5 5/8"
Ø16	Nº6 3/4"
Ø20	Nº7 7/8"
Ø25	Nº8 1"
	Nº9 1-1/8"
Ø32	Nº10 1-1/4"

CUADRO DE CARACTERÍSTICAS SEGÚN EL EUROCODIGO

HORMIGÓN	LOCALIZACIÓN	RESISTENCIA/ CONSISTENCIA/ Ømáx. ÁRIDO/ AMBIENTE	fck N/mm2	NIVEL DE CONTROL	COEF. DE SEGURIDAD Yc
	LIMPIEZA	HM-20 / P / 25	20 (3000 PSI)		
	CIMENTACION	HA-30 / P / 20 / XC2	30 (4500 PSI)	NORMAL	1,50
	ALZADOS	HA-30 / P / 20 / XC2	30 (4500 PSI)	NORMAL	1,50
ARMADURA	TIPO	DESIGNACIÓN	LÍMITE ELÁSTICO fyk N/mm2	NIVEL DE CONTROL	COEF. DE SEGURIDAD Ys
	ACERO PASIVO	B 400 S (Grado 60)	400	NORMAL	1,15
RECUBRIMIENTO NOMINAL		RECUBRIMIENTO MÍNIMO	Cimentaciones: 40 mm	VIDA ÚTIL DE LA ESTRUCTURA: 100 años	
			30 mm		
		Δr	10 mm	CONTROL DE LA EJECUCIÓN NORMAL	

NOTAS: LA DISTANCIA ENTRE CUALQUIER ARMADURA PASIVA Y EL PARAMETRO MAS PROXIMO NO SERA INFERIOR AL VALOR INDICADO. PARA GARANTIZARLO, SE EMPLEARAN LOS OPORTUNOS SEPARADORES.

UNIVERSIDAD DE BURGOS
ESCUELA POLITÉCNICA SUPERIOR

AUTORES DEL PROYECTO:
D. Alfonso Cid González
Dña. Raquel Estrada Merino
D. Sergio Agustín Ratón Alomar
Dña. Miriam Sacristán Terradillos

PROYECTO FIN DE CARRERA:
PUENTE EN EL PASO DE BOPAL SOBRE EL RÍO GRANDE DE MATAGALPA (NICARAGUA)

TUTOR DEL PROYECTO:
D. Juan Manual Manso Villalaín

FECHA: Febrero de 2012

TITULO DEL PLANO: PILAS. GEOMETRÍA DE PILAS 1, 2, 3, 4, 5

ESCALA: 1/50 (0 0,5 1,0 1,5 m)

PLANO: 3.6.1

HOJA: 1 de 2

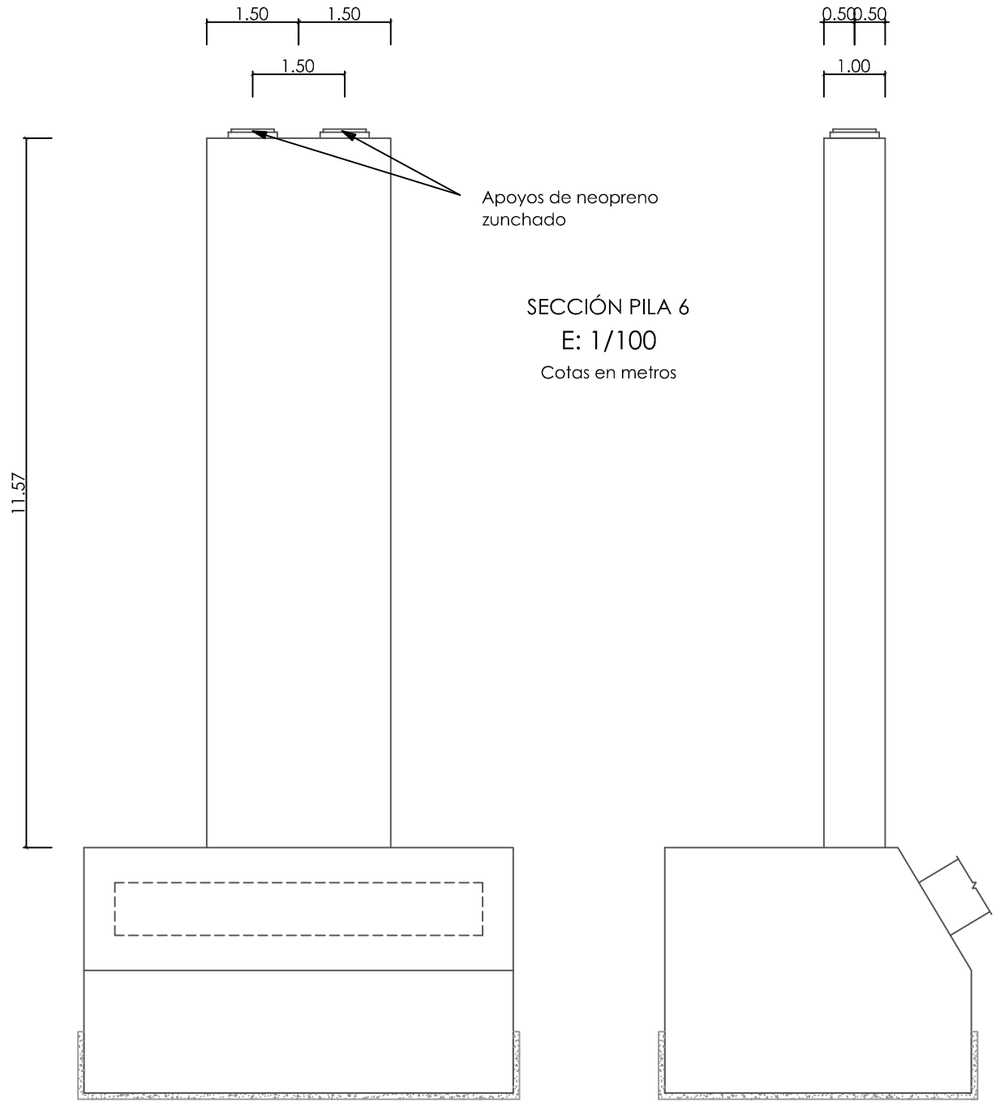

SECCIÓN PILA 6

E: 1/100

Cotas en metros

Vista en alzado

Vista de perfil

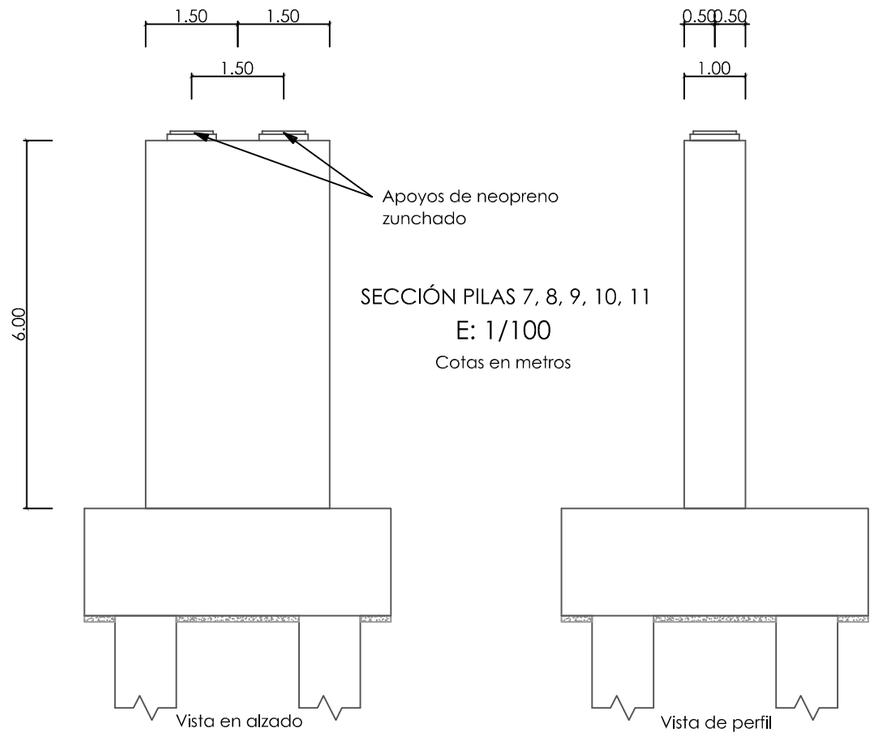

SECCIÓN PILAS 7, 8, 9, 10, 11

E: 1/100

Cotas en metros

Vista en alzado

Vista de perfil

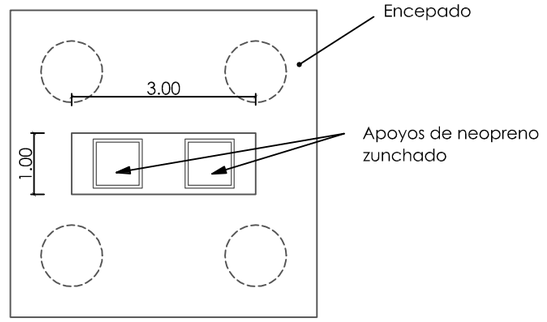

Vista en planta

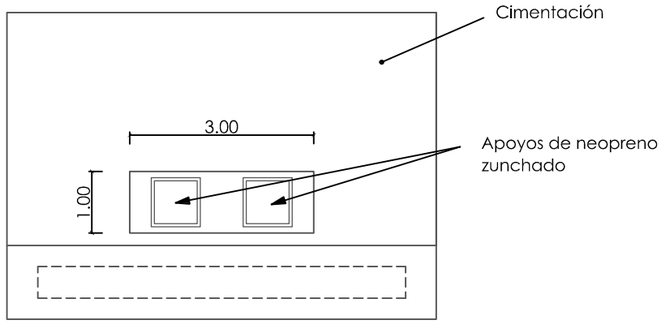

Vista en planta

DIAMETROS DE BARRAS CORRUGADAS DE REFUERZO	
Diametros (mm)	Diametros (")
Ø12	Nº4 1/2"
Ø14	Nº5 5/8"
Ø16	Nº6 3/4"
Ø20	Nº7 7/8"
Ø25	Nº8 1"
	Nº9 1-1/8"
Ø32	Nº10 1-1/4"

CUADRO DE CARACTERÍSTICAS SEGÚN EL EUROCODIGO

HORMIGÓN	LOCALIZACIÓN	RESISTENCIA/ CONSISTENCIA/ Ømáx. ÁRIDO/ AMBIENTE	fck N/mm2	NIVEL DE CONTROL	COEF. DE SEGURIDAD Yc
	LIMPIEZA	HM-20 / P / 25	20 (3000 PSI)		
	CIMENTACION	HA-30 / P / 20 / XC2	30 (4500 PSI)	NORMAL	1,50
	ALZADOS	HA-30 / P / 20 / XC2	30 (4500 PSI)	NORMAL	1,50
ARMADURA	TIPO	DESIGNACIÓN	LÍMITE ELÁSTICO fyk N/mm2	NIVEL DE CONTROL	COEF. DE SEGURIDAD Ys
	ACERO PASIVO	B 400 S (Grado 60)	400	NORMAL	1,15
RECUBRIMIENTO NOMINAL		RECUBRIMIENTO MÍNIMO	Cimentaciones: 40 mm	VIDA ÚTIL DE LA ESTRUCTURA: 100 años	
			30 mm	CONTROL DE LA EJECUCIÓN NORMAL	
		Δr	10 mm		
NOTAS	LA DISTANCIA ENTRE CUALQUIER ARMADURA PASIVA Y EL PARAMETRO MAS PROXIMO NO SERA INFERIOR AL VALOR INDICADO. PARA GARANTIZARLO, SE EMPLEARAN LOS OPORTUNOS SEPARADORES.				

UNIVERSIDAD DE BURGOS
ESCUELA POLITÉCNICA SUPERIOR

AUTORES DEL PROYECTO:
D. Alfonso Cid González
Dña. Raquel Estrada Merino
D. Sergio Agustín Ratón Alomar
Dña. Miriam Sacristán Terradillos

PROYECTO FIN DE CARRERA:

PUENTE EN EL PASO DE BOPAL SOBRE EL RÍO GRANDE DE MATAGALPA (NICARAGUA)

TUTOR DEL PROYECTO:
D. Juan Manual Manso Villalaín

FECHA: Febrero de 2012

TITULO DEL PLANO: PILAS. GEOMETRÍA DE PILAS 6, 7, 8, 9, 10, 11

ESCALA: 1/100 (0 1 2 3 m)

PLANO: 3.6.1

HOJA: 2 de 2

SECCIÓN TRANSVERSAL PILA 1 y 5

E: 1/75

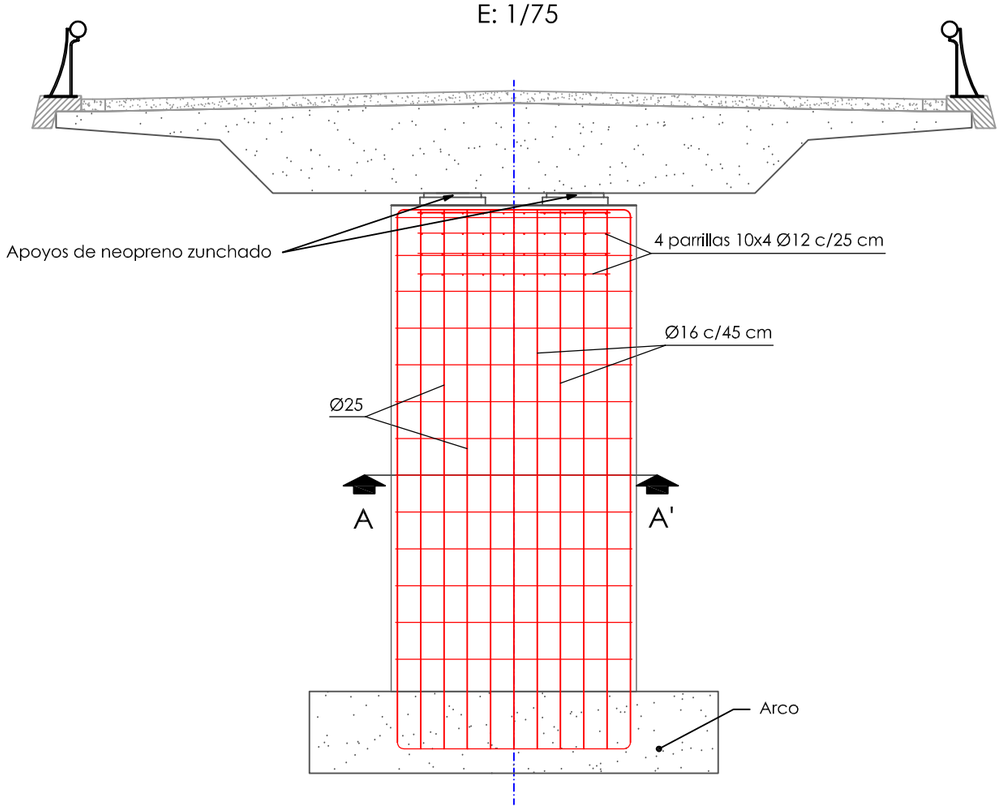

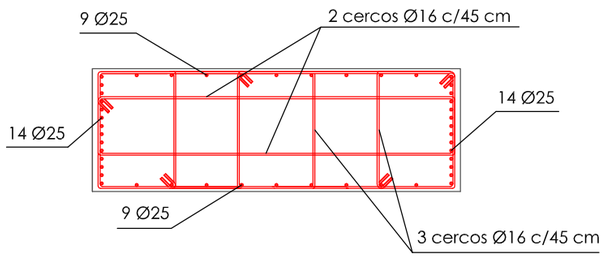

Sección A-A'

SECCIÓN PILA 1 y 5

E: 1/50

SECCIÓN LONGITUDINAL PILA 1 y 5

E: 1/50

Cotas en metros

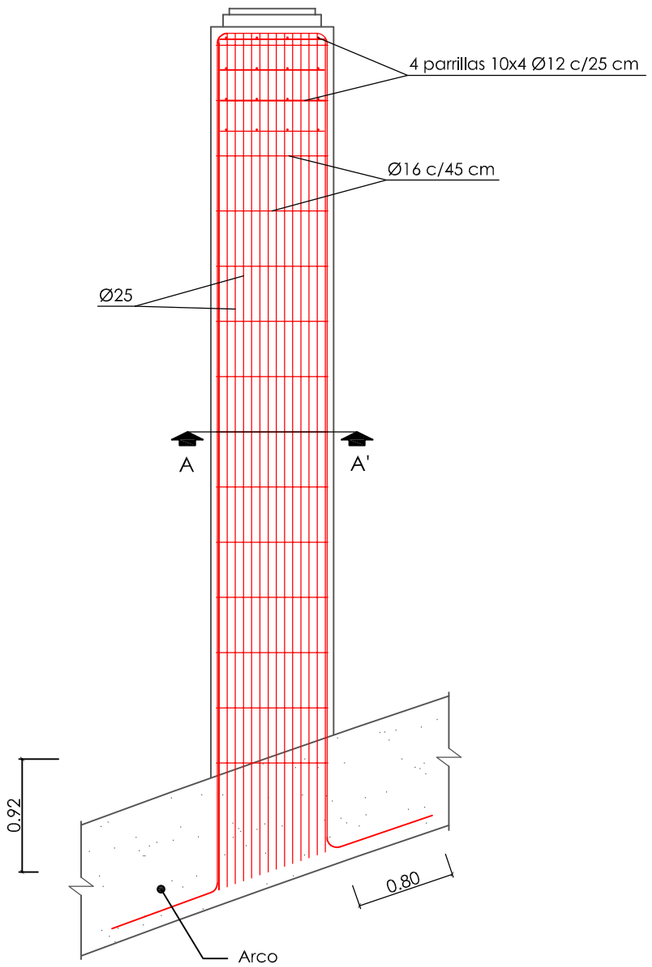

ARMADO EN APOYOS

E: 1/50

Cotas en metros

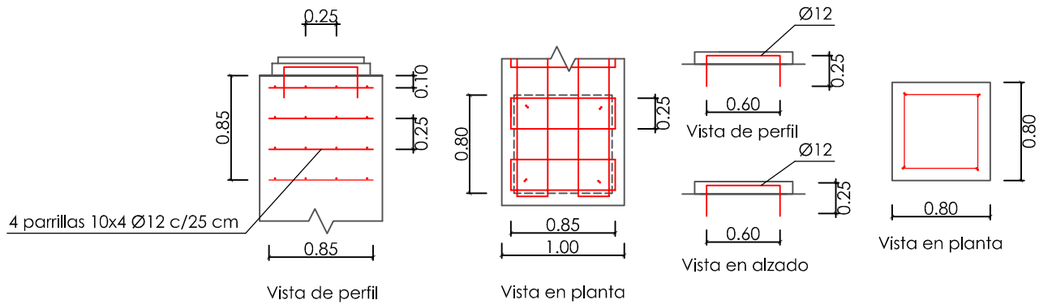

DIAMETROS DE BARRAS CORRUGADAS DE REFUERZO	
Diametros (mm)	Diametros (")
Ø12	Nº4 1/2"
Ø14	Nº5 5/8"
Ø16	Nº6 3/4"
Ø20	Nº7 7/8"
Ø25	Nº8 1"
	Nº9 1-1/8"
Ø32	Nº10 1-1/4"

CUADRO DE CARACTERÍSTICAS SEGÚN EL EUROCODIGO

HORMIGÓN	LOCALIZACIÓN	RESISTENCIA/ CONSISTENCIA/ Ømáx. ÁRIDO/ AMBIENTE	fck N/mm2	NIVEL DE CONTROL	COEF. DE SEGURIDAD Yc
	LIMPIEZA	HM-20 / P / 25	20 (3000 PSI)		
	CIMENTACION	HA-30 / P / 20 / XC2	30 (4500 PSI)	NORMAL	1,50
	ALZADOS	HA-30 / P / 20 / XC2	30 (4500 PSI)	NORMAL	1,50
ARMADURA	TIPO	DESIGNACIÓN	LÍMITE ELÁSTICO fyk N/mm2	NIVEL DE CONTROL	COEF. DE SEGURIDAD Ys
	ACERO PASIVO	B 400 S (Grado 60)	400	NORMAL	1,15
RECUBRIMIENTO NOMINAL		RECUBRIMIENTO MÍNIMO	Cimentaciones: 40 mm	VIDA ÚTIL DE LA ESTRUCTURA: 100 años	
			30 mm		
		Δr	10 mm	CONTROL DE LA EJECUCIÓN NORMAL	
NOTAS	LA DISTANCIA ENTRE CUALQUIER ARMADURA PASIVA Y EL PARAMETRO MAS PROXIMO NO SERA INFERIOR AL VALOR INDICADO. PARA GARANTIZARLO, SE EMPLEARAN LOS OPORTUNOS SEPARADORES.				

UNIVERSIDAD DE BURGOS
ESCUELA POLITÉCNICA SUPERIOR

AUTORES DEL PROYECTO:
D. Alfonso Cid González
Dña. Raquel Estrada Merino
D. Sergio Agustín Ratón Alomar
Dña. Miriam Sacristán Terradillos

PROYECTO FIN DE CARRERA:

PUENTE EN EL PASO DE BOPAL SOBRE EL RÍO GRANDE DE MATAGALPA (NICARAGUA)

TUTOR DEL PROYECTO:
D. Juan Manual Manso Villalaín

FECHA: Febrero de 2012

TITULO DEL PLANO: PILAS. ARMADO DE PILAS 1 y 5

ESCALA: 1/50 (0 0,5 1,0 1,5 m)

PLANO: 3.6.2

HOJA: 1 de 5

SECCIÓN TRANSVERSAL PILA 2 y 4

E: 1/50

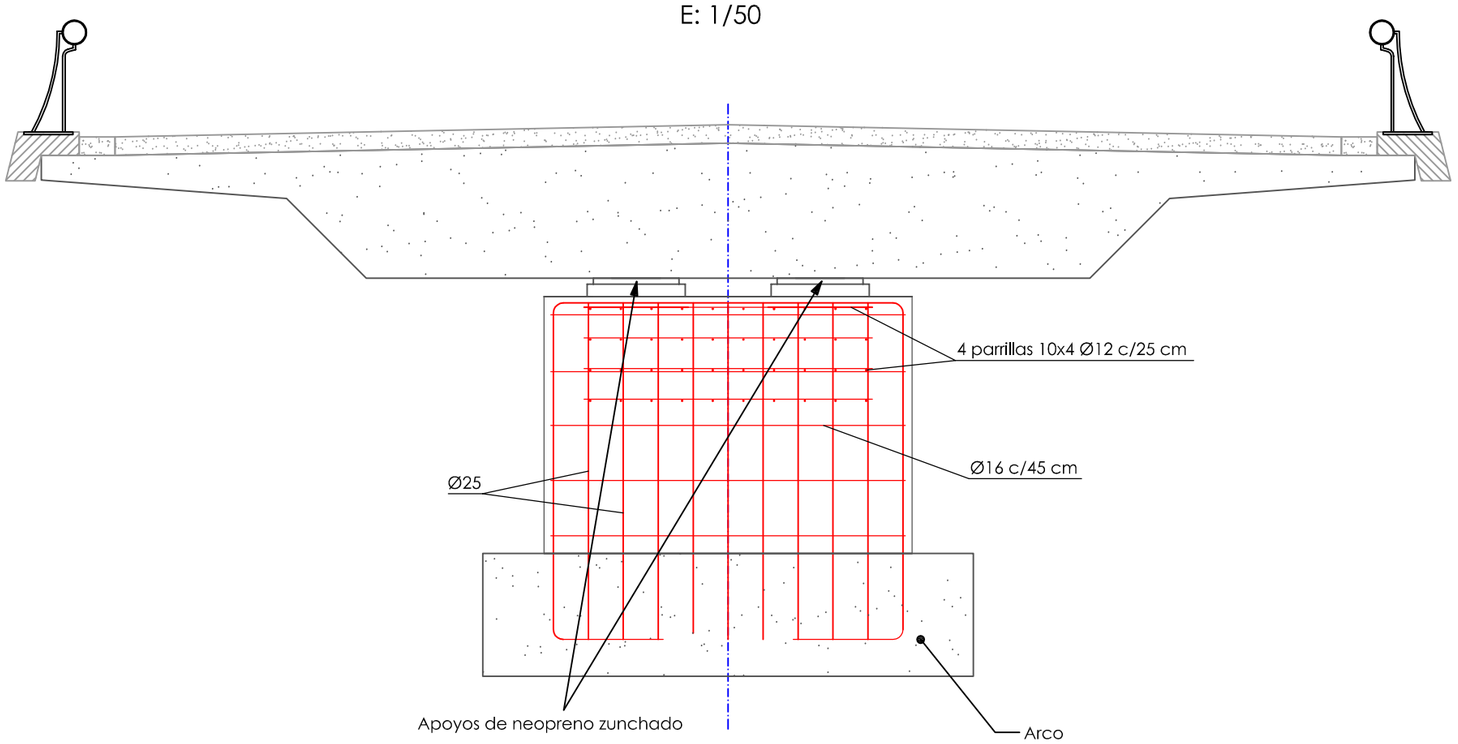

SECCIÓN LONGITUDINAL PILA 2 y 4

E: 1/50

Cotas en metros

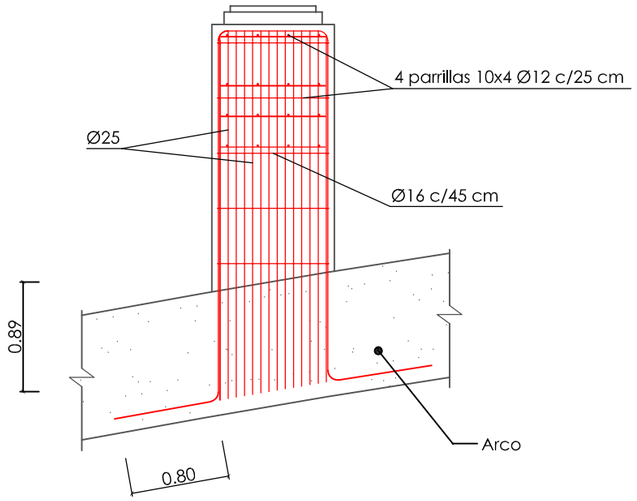

SECCIÓN PILA 2 y 4

E: 1/50

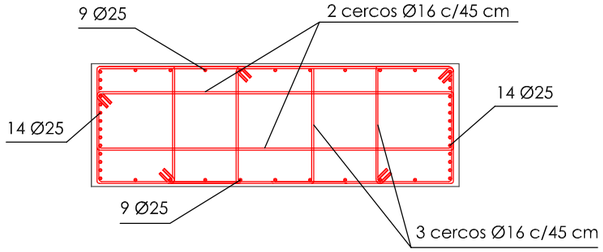

ARMADO EN APOYOS

E: 1/50

Cotas en metros

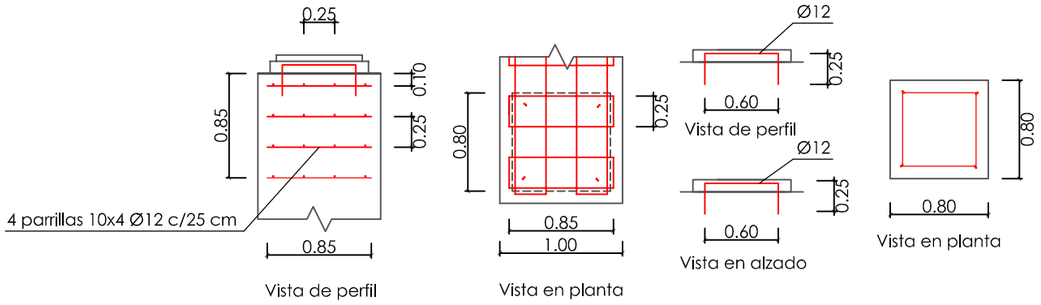

DIAMETROS DE BARRAS CORRUGADAS DE REFUERZO	
Diametros (mm)	Diametros (")
Ø12	Nº4 1/2"
Ø14	Nº5 5/8"
Ø16	Nº6 3/4"
Ø20	Nº7 7/8"
Ø25	Nº8 1"
	Nº9 1-1/8"
Ø32	Nº10 1-1/4"

CUADRO DE CARACTERÍSTICAS SEGÚN EL EUROCODIGO

HORMIGÓN	LOCALIZACIÓN	RESISTENCIA/ CONSISTENCIA/ Ømáx. ÁRIDO/ AMBIENTE	fck N/mm2	NIVEL DE CONTROL	COEF. DE SEGURIDAD Yc
	LIMPIEZA	HM-20 / P / 25	20 (3000 PSI)		
	CIMENTACION	HA-30 / P / 20 / XC2	30 (4500 PSI)	NORMAL	1,50
	ALZADOS	HA-30 / P / 20 / XC2	30 (4500 PSI)	NORMAL	1,50
ARMADURA	TIPO	DESIGNACIÓN	LÍMITE ELÁSTICO fyk N/mm2	NIVEL DE CONTROL	COEF. DE SEGURIDAD Ys
	ACERO PASIVO	B 400 S (Grado 60)	400	NORMAL	1,15
RECUBRIMIENTO NOMINAL		RECUBRIMIENTO MÍNIMO	Cimentaciones: 40 mm	VIDA ÚTIL DE LA ESTRUCTURA: 100 años	
			30 mm	CONTROL DE LA EJECUCIÓN NORMAL	
		Δr	10 mm		

NOTAS: LA DISTANCIA ENTRE CUALQUIER ARMADURA PASIVA Y EL PARAMETRO MAS PROXIMO NO SERA INFERIOR AL VALOR INDICADO. PARA GARANTIZARLO, SE EMPLEARAN LOS OPORTUNOS SEPARADORES.

UNIVERSIDAD DE BURGOS
ESCUELA POLITÉCNICA SUPERIOR

AUTORES DEL PROYECTO:
D. Alfonso Cid González
Dña. Raquel Estrada Merino
D. Sergio Agustín Ratón Alomar
Dña. Miriam Sacristán Terradillos

PROYECTO FIN DE CARRERA:

PUENTE EN EL PASO DE BOPAL SOBRE EL RÍO GRANDE DE MATAGALPA (NICARAGUA)

TUTOR DEL PROYECTO:
D. Juan Manual Manso Villalaín

FECHA: Febrero de 2012

TITULO DEL PLANO: PILAS. ARMADO DE PILAS 2 y 4

ESCALA: 1/50 (0 0,5 1,0 1,5 m)

PLANO: 3.6.2

HOJA: 2 de 5

SECCIÓN TRANSVERSAL PILA 3

E: 1/50

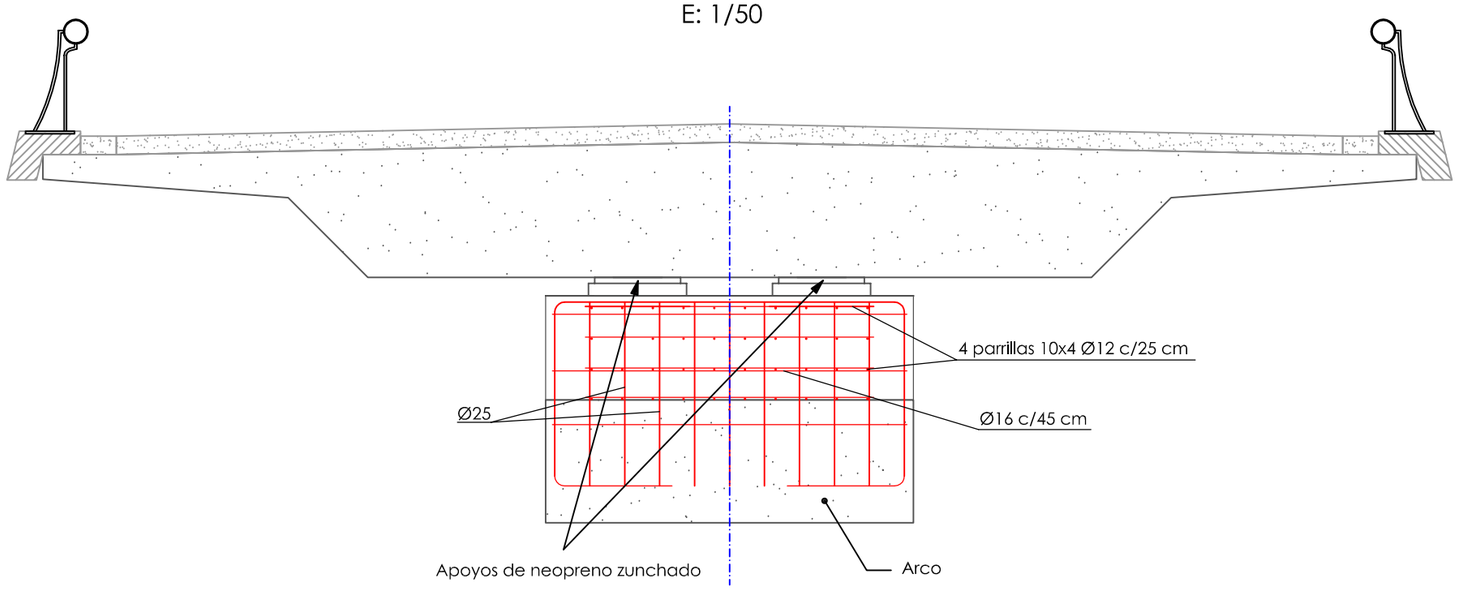

SECCIÓN LONGITUDINAL PILA 3

E: 1/50

Cotas en metros

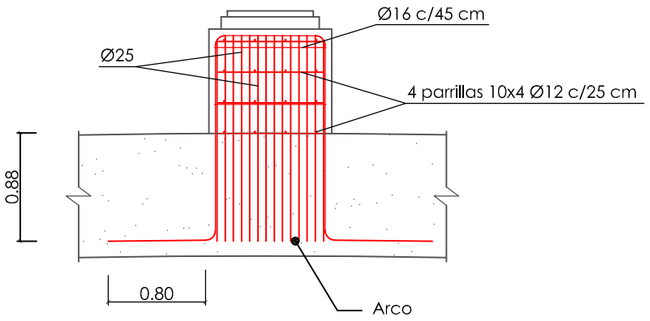

SECCIÓN PILA 3

E: 1/50

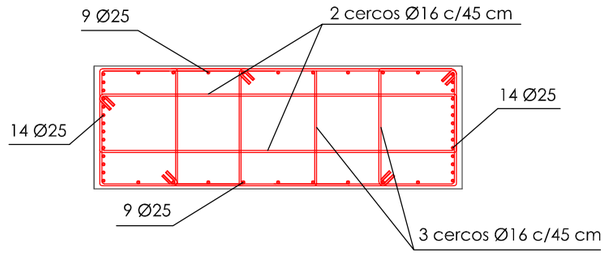

ARMADO EN APOYOS

E: 1/50

Cotas en metros

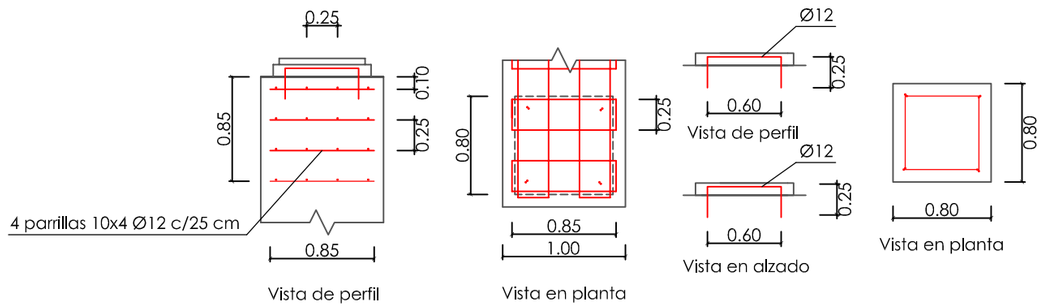

DIAMETROS DE BARRAS CORRUGADAS DE REFUERZO	
Diametros (mm)	Diametros (")
Ø12	Nº4 1/2"
Ø14	Nº5 5/8"
Ø16	Nº6 3/4"
Ø20	Nº7 7/8"
Ø25	Nº8 1"
	Nº9 1-1/8"
Ø32	Nº10 1-1/4"

CUADRO DE CARACTERÍSTICAS SEGÚN EL EUROCODIGO

HORMIGÓN	LOCALIZACIÓN	RESISTENCIA/ CONSISTENCIA/ Ømáx. ÁRIDO/ AMBIENTE	fck N/mm2	NIVEL DE CONTROL	COEF. DE SEGURIDAD Yc
	LIMPIEZA	HM-20 / P / 25	20 (3000 PSI)		
	CIMENTACION	HA-30 / P / 20 / XC2	30 (4500 PSI)	NORMAL	1,50
	ALZADOS	HA-30 / P / 20 / XC2	30 (4500 PSI)	NORMAL	1,50
ARMADURA	TIPO	DESIGNACIÓN	LÍMITE ELÁSTICO fyk N/mm2	NIVEL DE CONTROL	COEF. DE SEGURIDAD Ys
	ACERO PASIVO	B 400 S (Grado 60)	400	NORMAL	1,15
RECUBRIMIENTO NOMINAL		RECUBRIMIENTO MÍNIMO	Cimentaciones: 40 mm	VIDA ÚTIL DE LA ESTRUCTURA: 100 años	
			30 mm	CONTROL DE LA EJECUCIÓN NORMAL	
		Δr	10 mm		
NOTAS	LA DISTANCIA ENTRE CUALQUIER ARMADURA PASIVA Y EL PARAMETRO MAS PROXIMO NO SERA INFERIOR AL VALOR INDICADO. PARA GARANTIZARLO, SE EMPLEARAN LOS OPORTUNOS SEPARADORES.				

UNIVERSIDAD DE BURGOS
ESCUELA POLITÉCNICA SUPERIOR

AUTORES DEL PROYECTO:
D. Alfonso Cid González
Dña. Raquel Estrada Merino
D. Sergio Agustín Ratón Alomar
Dña. Miriam Sacristán Terradillos

PROYECTO FIN DE CARRERA:

PUENTE EN EL PASO DE BOPAL SOBRE EL RÍO GRANDE DE MATAGALPA (NICARAGUA)

TUTOR DEL PROYECTO:
D. Juan Manual Manso Villalaín

FECHA: Febrero de 2012

TITULO DEL PLANO: PILAS. ARMADO DE PILA 3

ESCALA: 1/50 (0 0,5 1,0 1,5 m)

PLANO: 3.6.2

HOJA: 3 de 5

SECCIÓN TRANSVERSAL PILA 6

E: 1/50

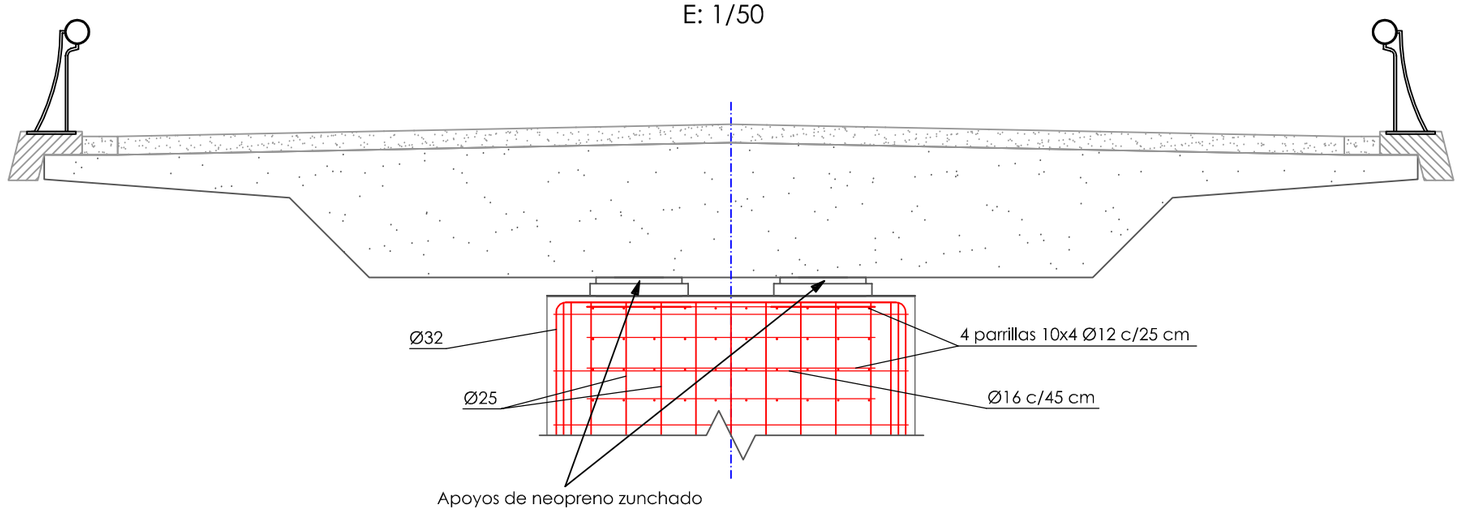

SECCIÓN LONGITUDINAL PILA 1 y 5

E: 1/50 Cotas en metros

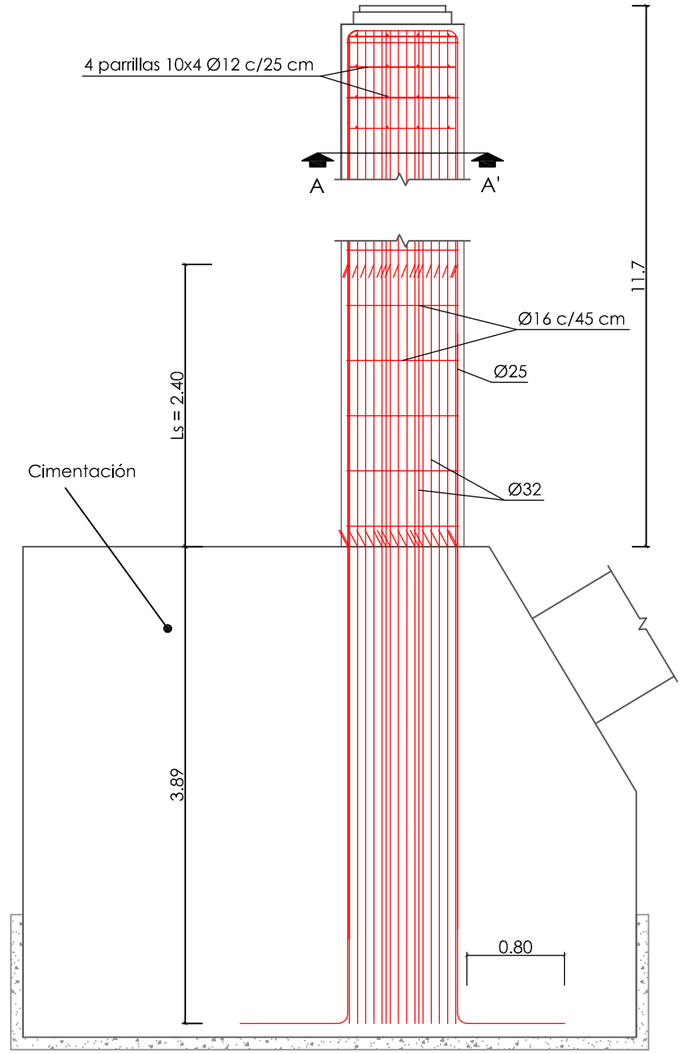

Sección A-A'

SECCIÓN PILA 6

E: 1/50

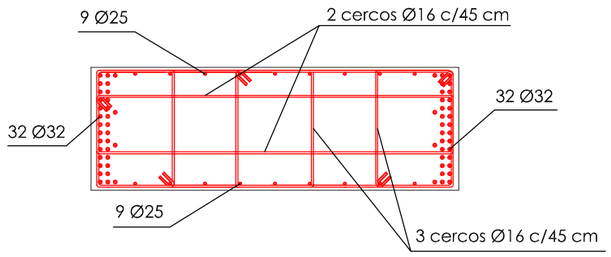

ARMADO EN APOYOS

E: 1/50

Cotas en metros

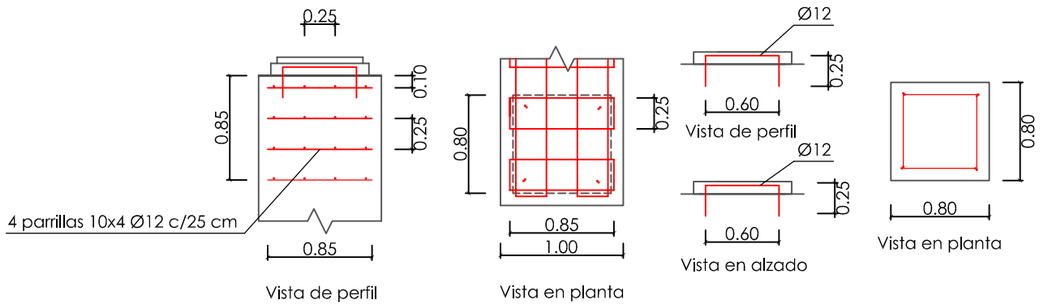

DIAMETROS DE BARRAS CORRUGADAS DE REFUERZO	
Diametros (mm)	Diametros (")
Ø12	Nº4 1/2"
Ø14	Nº5 5/8"
Ø16	Nº6 3/4"
Ø20	Nº7 7/8"
Ø25	Nº8 1"
	Nº9 1-1/8"
Ø32	Nº10 1-1/4"

CUADRO DE CARACTERÍSTICAS SEGÚN EL EUROCODIGO

HORMIGÓN	LOCALIZACIÓN	RESISTENCIA/ CONSISTENCIA/ Ømáx. ÁRIDO/ AMBIENTE	fck N/mm2	NIVEL DE CONTROL	COEF. DE SEGURIDAD Yc
	LIMPIEZA	HM-20 / P / 25	20 (3000 PSI)		
	CIMENTACION	HA-30 / P / 20 / XC2	30 (4500 PSI)	NORMAL	1,50
	ALZADOS	HA-30 / P / 20 / XC2	30 (4500 PSI)	NORMAL	1,50
ARMADURA	TIPO	DESIGNACIÓN	LÍMITE ELÁSTICO fyk N/mm2	NIVEL DE CONTROL	COEF. DE SEGURIDAD Ys
	ACERO PASIVO	B 400 S (Grado 60)	400	NORMAL	1,15
RECUBRIMIENTO NOMINAL		RECUBRIMIENTO MÍNIMO	Cimentaciones: 40 mm 30 mm	VIDA ÚTIL DE LA ESTRUCTURA: 100 años CONTROL DE LA EJECUCIÓN NORMAL	
		Δr	10 mm		
NOTAS	LA DISTANCIA ENTRE CUALQUIER ARMADURA PASIVA Y EL PARAMETRO MAS PROXIMO NO SERA INFERIOR AL VALOR INDICADO. PARA GARANTIZARLO, SE EMPLEARAN LOS OPORTUNOS SEPARADORES.				

UNIVERSIDAD DE BURGOS
ESCUELA POLITÉCNICA SUPERIOR

AUTORES DEL PROYECTO:
D. Alfonso Cid González
Dña. Raquel Estrada Merino
D. Sergio Agustín Ratón Alomar
Dña. Miriam Sacristán Terradillos

PROYECTO FIN DE CARRERA:

PUENTE EN EL PASO DE BOPAL SOBRE EL RÍO GRANDE DE MATAGALPA (NICARAGUA)

TUTOR DEL PROYECTO:
D. Juan Manual Manso Villalaín

FECHA: Febrero de 2012

TITULO DEL PLANO: PILAS. ARMADO DE PILA 6

ESCALA: 1/50 (0 0,5 1,0 1,5 m)

PLANO: 3.6.2

HOJA: 4 de 5

SECCIÓN TRANSVERSAL PILA 7,8,9,10,11

E: 1/50

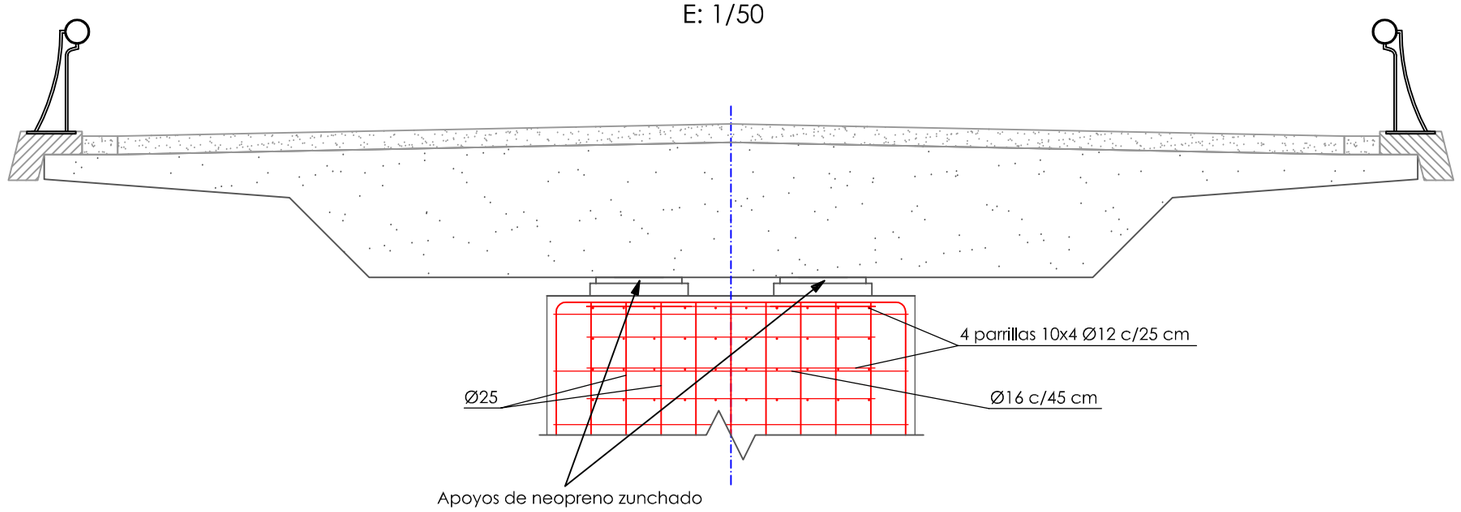

SECCIÓN LONGITUDINAL PILA 7,8,9,10,11

E: 1/50

Cotas en metros

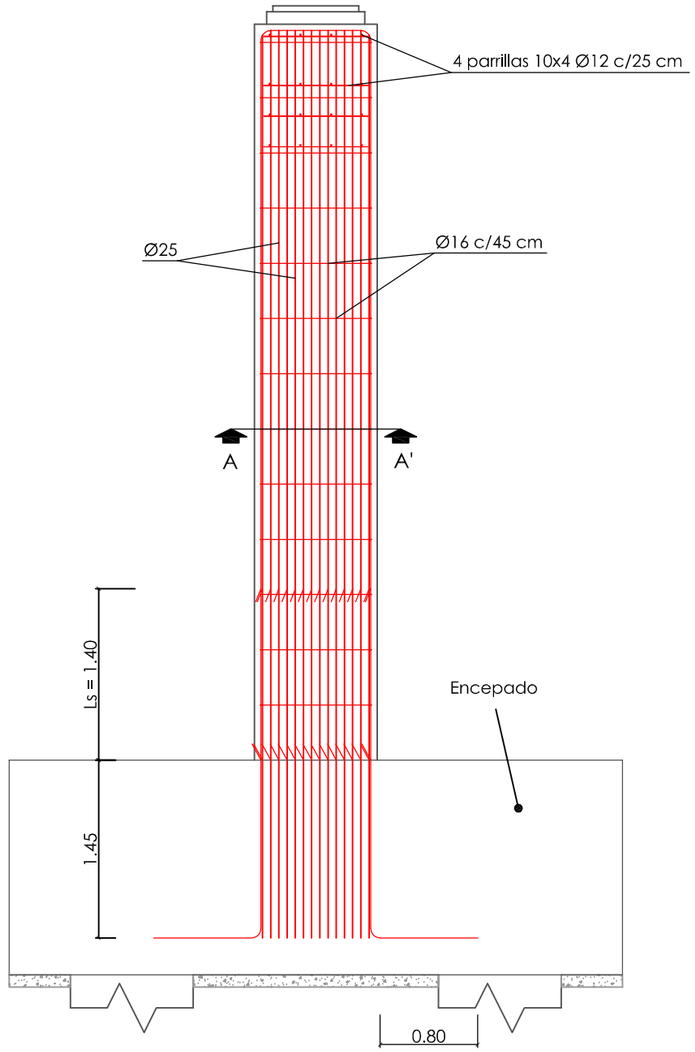

Sección A-A'

SECCIÓN PILA 7,8,9,10,11

E: 1/50

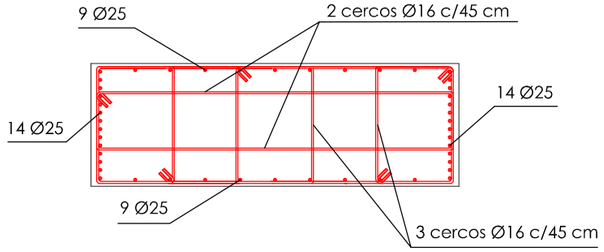

ARMADO EN APOYOS

E: 1/50

Cotas en metros

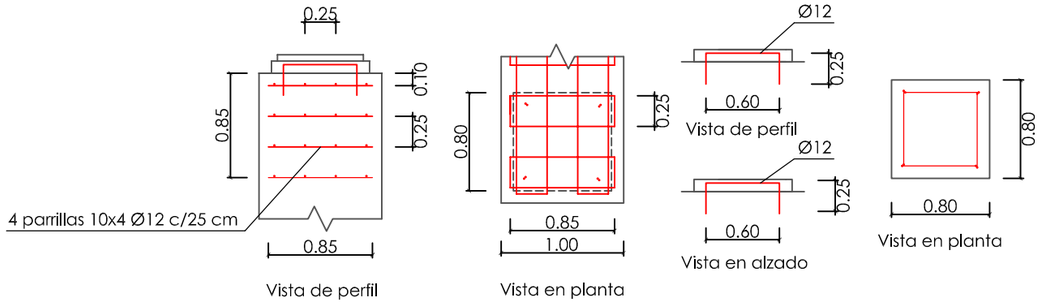

DIAMETROS DE BARRAS CORRUGADAS DE REFUERZO	
Diametros (mm)	Diametros (")
Ø12	Nº4 1/2"
Ø14	Nº5 5/8"
Ø16	Nº6 3/4"
Ø20	Nº7 7/8"
Ø25	Nº8 1"
	Nº9 1-1/8"
Ø32	Nº10 1-1/4"

CUADRO DE CARACTERÍSTICAS SEGÚN EL EUROCODIGO

HORMIGÓN	LOCALIZACIÓN	RESISTENCIA/ CONSISTENCIA/ Ømáx. ÁRIDO/ AMBIENTE	fck N/mm2	NIVEL DE CONTROL	COEF. DE SEGURIDAD Yc
	LIMPIEZA	HM-20 / P / 25	20 (3000 PSI)		
	CIMENTACION	HA-30 / P / 20 / XC2	30 (4500 PSI)	NORMAL	1,50
	ALZADOS	HA-30 / P / 20 / XC2	30 (4500 PSI)	NORMAL	1,50
ARMADURA	TIPO	DESIGNACIÓN	LÍMITE ELÁSTICO fyk N/mm2	NIVEL DE CONTROL	COEF. DE SEGURIDAD Ys
	ACERO PASIVO	B 400 S (Grado 60)	400	NORMAL	1,15
RECUBRIMIENTO NOMINAL		RECUBRIMIENTO MÍNIMO	Cimentaciones: 40 mm 30 mm	VIDA ÚTIL DE LA ESTRUCTURA: 100 años CONTROL DE LA EJECUCIÓN NORMAL	
		Δr	10 mm		
NOTAS	LA DISTANCIA ENTRE CUALQUIER ARMADURA PASIVA Y EL PARAMETRO MAS PROXIMO NO SERA INFERIOR AL VALOR INDICADO. PARA GARANTIZARLO, SE EMPLEARAN LOS OPORTUNOS SEPARADORES.				

UNIVERSIDAD DE BURGOS
ESCUELA POLITÉCNICA SUPERIOR

AUTORES DEL PROYECTO:
D. Alfonso Cid González
Dña. Raquel Estrada Merino
D. Sergio Agustín Ratón Alomar
Dña. Miriam Sacristán Terradillos

PROYECTO FIN DE CARRERA:

PUENTE EN EL PASO DE BOPAL SOBRE EL RÍO GRANDE DE MATAGALPA (NICARAGUA)

TUTOR DEL PROYECTO:
D. Juan Manual Manso Villalaín

FECHA: Febrero de 2012

TITULO DEL PLANO: PILAS. ARMADO DE PILAS 7, 8, 9, 10, 11

ESCALA: 1/50 (0 0,5 1,0 1,5 m)

PLANO: 3.6.2

HOJA: 5 de 5

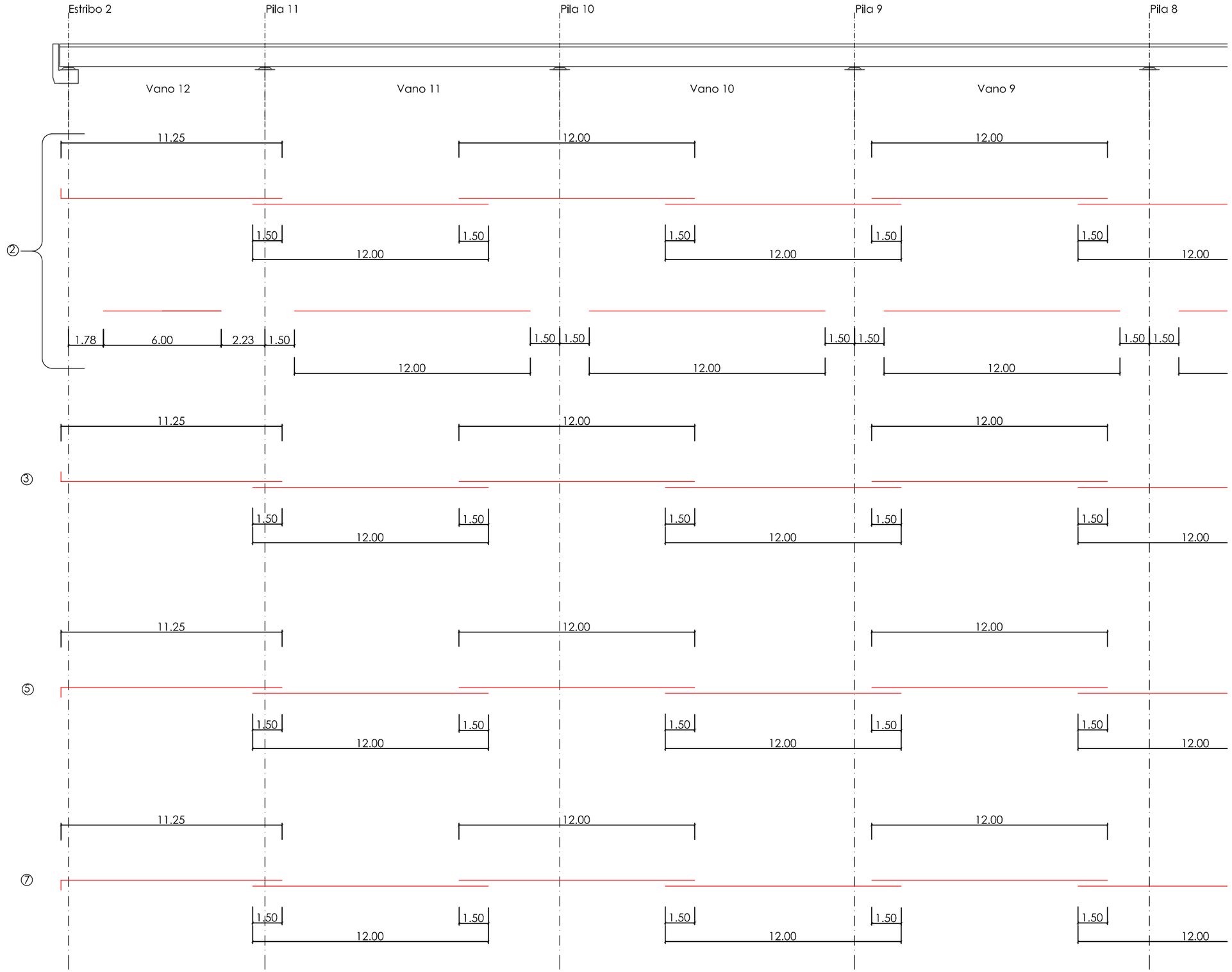

UNIVERSIDAD DE BURGOS ESCUELA POLITÉCNICA SUPERIOR	***AUTORES DEL PROYECTO:*** D. Alfonso Cid González Dña. Raquel Estrada Merino D. Sergio Agustín Ratón Alomar Dña. Miriam Sacristán Terradillos	***PROYECTO FIN DE CARRERA:*** **PUENTE EN EL PASO DE BOPAL SOBRE EL RÍO GRANDE DE MATAGALPA (NICARAGUA)**	***TUTOR DEL PROYECTO:*** D. Juan Manual Manso Villalaín ***FECHA:*** Febrero de 2012	***TITULO DEL PLANO:*** ARMADO TABLERO. DESARROLLO LONGITUDINAL ***ESCALA:*** 1/200 (0 1 2 4 6 m) ***PLANO:*** 3.7.1 ***HOJA:*** 1 de 4

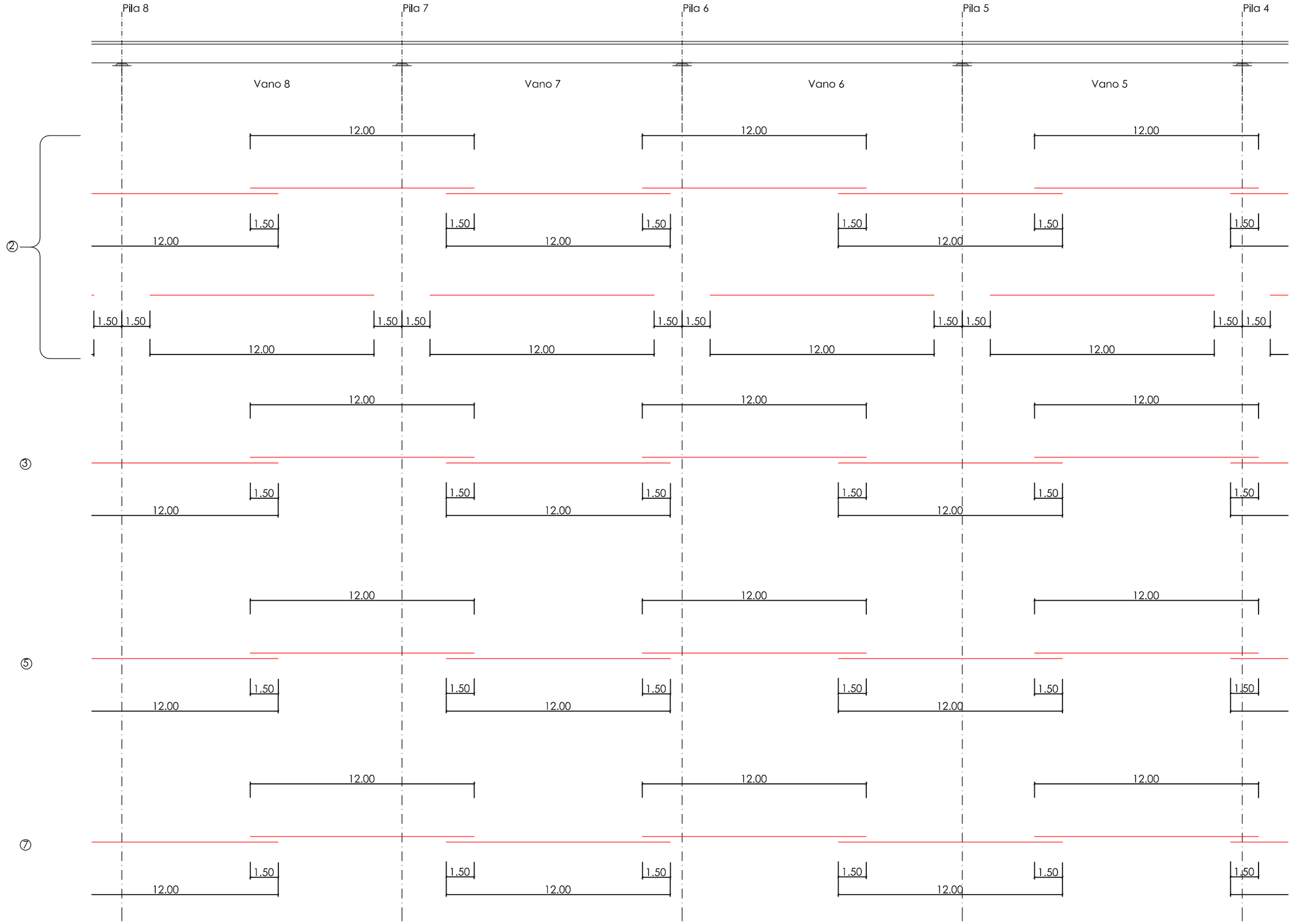

UNIVERSIDAD DE BURGOS ESCUELA POLITÉCNICA SUPERIOR	***AUTORES DEL PROYECTO:*** D. Alfonso Cid González Dña. Raquel Estrada Merino D. Sergio Agustín Ratón Alomar Dña. Miriam Sacristán Terradillos	***PROYECTO FIN DE CARRERA:*** **PUENTE EN EL PASO DE BOPAL SOBRE EL RÍO GRANDE DE MATAGALPA (NICARAGUA)**	***TUTOR DEL PROYECTO:*** D. Juan Manual Manso Villalaín ***FECHA:*** Febrero de 2012	***TITULO DEL PLANO:*** ARMADO TABLERO. DESARROLLO LONGITUDINAL ***ESCALA:*** 1/200 (0 1 2 4 6 m) ***PLANO:*** 3.7.1 ***HOJA:*** 2 de 4

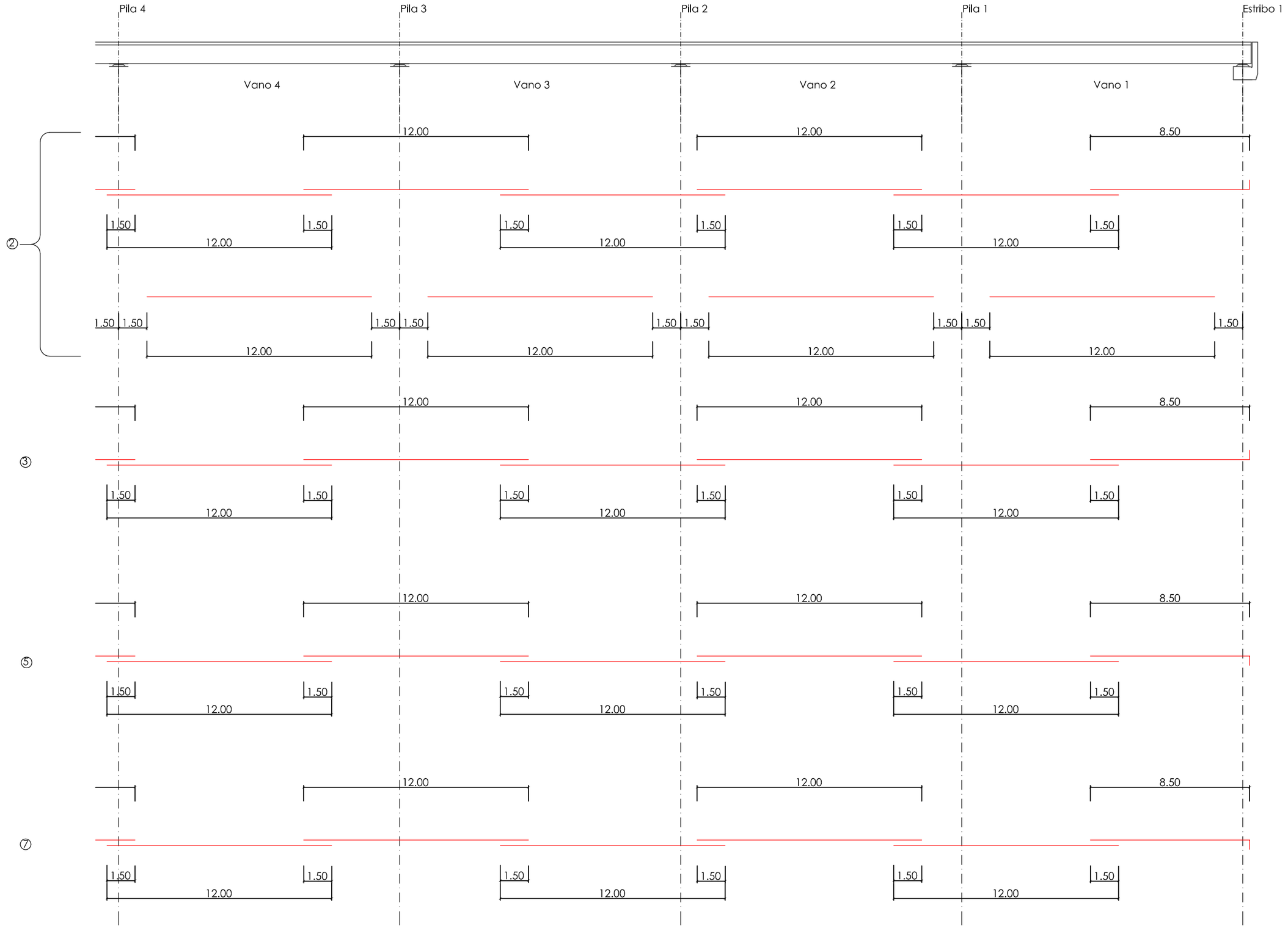

UNIVERSIDAD DE BURGOS ESCUELA POLITÉCNICA SUPERIOR	***AUTORES DEL PROYECTO:*** D. Alfonso Cid González Dña. Raquel Estrada Merino D. Sergio Agustín Ratón Alomar Dña. Miriam Sacristán Terradillos	***PROYECTO FIN DE CARRERA:*** **PUENTE EN EL PASO DE BOPAL SOBRE EL RÍO GRANDE DE MATAGALPA (NICARAGUA)**	***TUTOR DEL PROYECTO:*** D. Juan Manual Manso Villalaín ***FECHA:*** Febrero de 2012	***TITULO DEL PLANO:*** ARMADO TABLERO. DESARROLLO LONGITUDINAL ***ESCALA:*** 1/200 (0 1 2 4 6 m) ***PLANO:*** 3.7.1 ***HOJA:*** 3 de 4

SECCIÓN TIPO TABLERO

E: 1/50

Cotas en metros

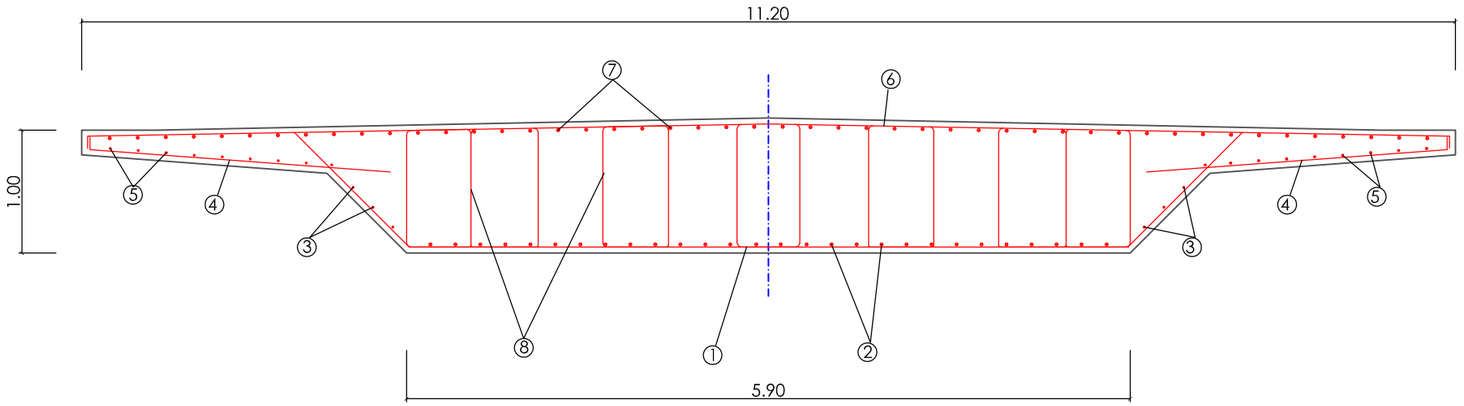

EN APOYO

Número	Ø
①	Ø16 c/30
②	Ø25 c/20
③	6Ø16
④	Ø16 c/30
⑤	18Ø16
⑥	Ø16 c/30
⑦	Ø25 c/20
⑧	Ø16 c/30

EN CENTRO-LUZ

Número	Ø
①	Ø16 c/30
②	Ø25 c/20 + Refuerzo Ø25 c/20
③	6Ø16
④	Ø16 c/30
⑤	18Ø16
⑥	Ø16 c/30
⑦	Ø25 c/20
⑧	Ø16 c/30

DIAMETROS DE BARRAS CORRUGADAS DE REFUERZO	
Diametros (mm)	Diametros (")
Ø12	Nº4 1/2"
Ø14	Nº5 5/8"
Ø16	Nº6 3/4"
Ø20	Nº7 7/8"
Ø25	Nº8 1"
	Nº9 1-1/8"
Ø32	Nº10 1-1/4"

CUADRO DE CARACTERÍSTICAS SEGÚN EL EUROCODIGO

HORMIGÓN	LOCALIZACIÓN	RESISTENCIA/ CONSISTENCIA/ Ømáx. ÁRIDO/ AMBIENTE	fck N/mm2	NIVEL DE CONTROL	COEF. DE SEGURIDAD Yc
	LIMPIEZA	HM-20 / P / 25	20 (3000 PSI)		
	CIMENTACION	HA-30 / P / 20 / XC2	30 (4500 PSI)	NORMAL	1,50
	ALZADOS	HA-30 / P / 20 / XC2	30 (4500 PSI)	NORMAL	1,50
ARMADURA	TIPO	DESIGNACIÓN	LÍMITE ELÁSTICO fyk N/mm2	NIVEL DE CONTROL	COEF. DE SEGURIDAD Ys
	ACERO PASIVO	B 400 S (Grado 60)	400	NORMAL	1,15
RECUBRIMIENTO NOMINAL		RECUBRIMIENTO MÍNIMO	Cimentaciones: 40 mm	VIDA ÚTIL DE LA ESTRUCTURA: 100 años	
			30 mm	CONTROL DE LA EJECUCIÓN NORMAL	
		Δr	10 mm		
NOTAS	LA DISTANCIA ENTRE CUALQUIER ARMADURA PASIVA Y EL PARAMETRO MAS PROXIMO NO SERA INFERIOR AL VALOR INDICADO. PARA GARANTIZARLO, SE EMPLEARAN LOS OPORTUNOS SEPARADORES.				

UNIVERSIDAD DE BURGOS
ESCUELA POLITÉCNICA SUPERIOR

AUTORES DEL PROYECTO:
D. Alfonso Cid González
Dña. Raquel Estrada Merino
D. Sergio Agustín Ratón Alomar
Dña. Miriam Sacristán Terradillos

PROYECTO FIN DE CARRERA:

PUENTE EN EL PASO DE BOPAL SOBRE EL RÍO GRANDE DE MATAGALPA (NICARAGUA)

TUTOR DEL PROYECTO:
D. Juan Manual Manso Villalaín

FECHA: Febrero de 2012

TITULO DEL PLANO: ARMADO TABLERO. SECCIONES

ESCALA: 1/50 (0 0,5 1,0 1,5 m)

PLANO: 3.7.1

HOJA: 4 de 4

SECCIÓN DEL TABLERO

E: 1/50

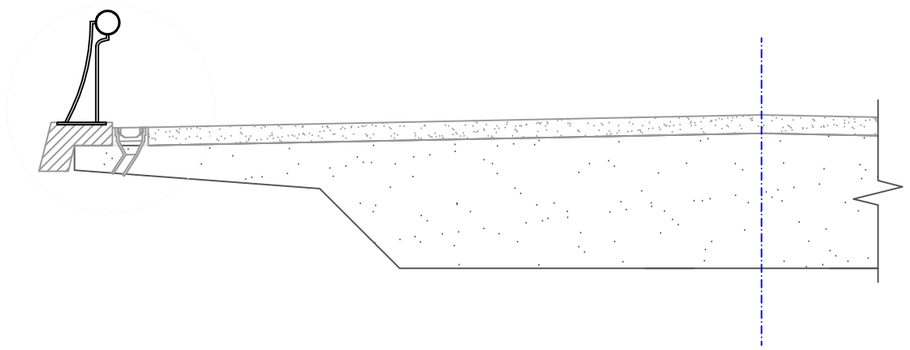

DETALLES

E: 1/15

Cotas en metros

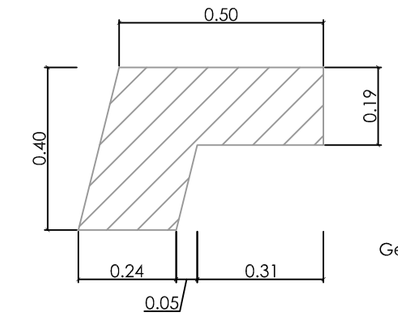

Geometría

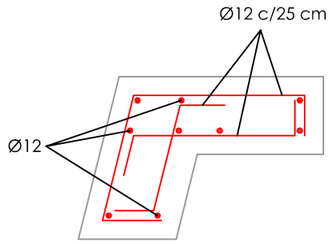

Armado

DETALLES

E: 1/15

Cotas en milimetros

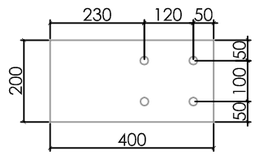

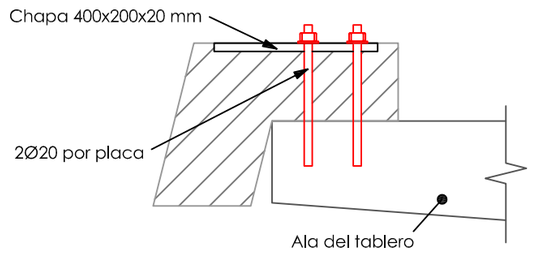

DETALLE BARRERA SEMIRÍGIDA Y SUMIDERO

E: 1/15

Cotas en metros

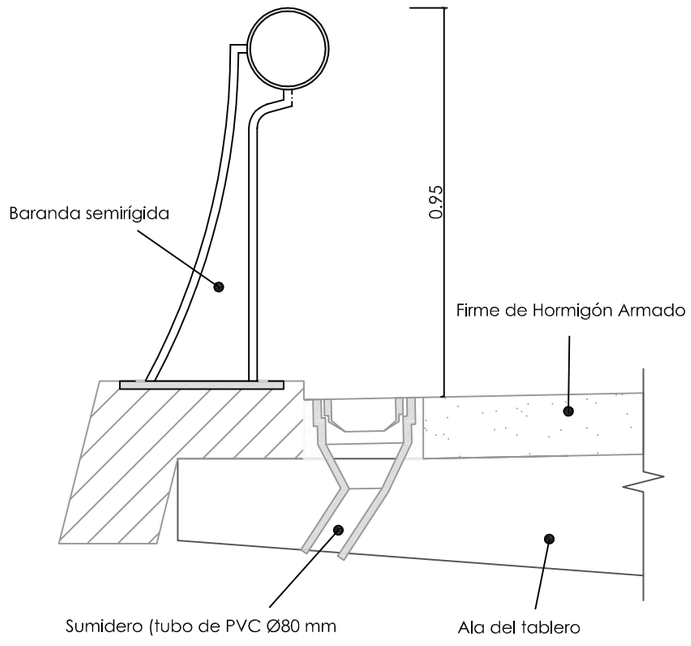

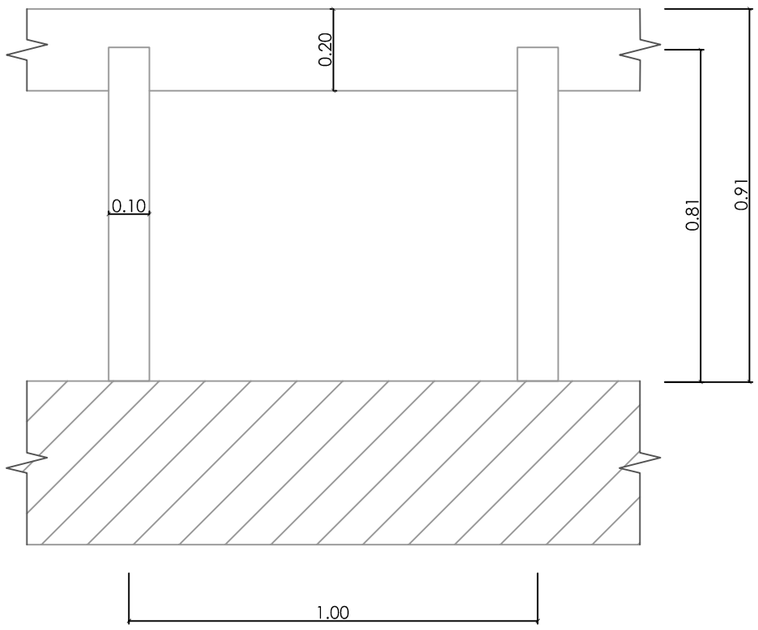

Vista en alzado de la baranda

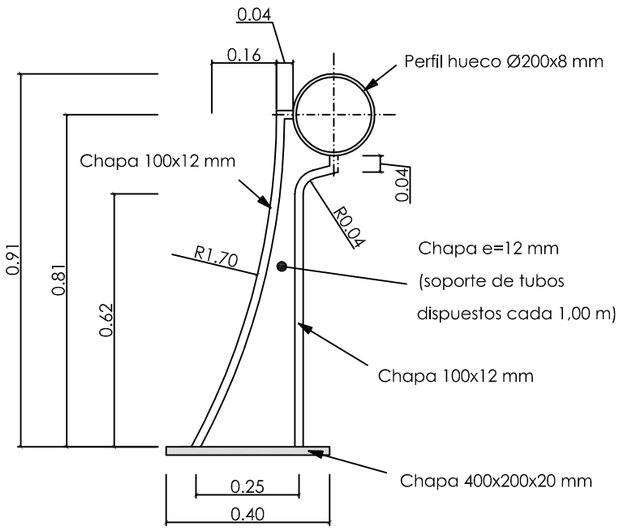

DETALLE BARRERA SEMIRÍGIDA

E: 1/15

Cotas en metros

UNIVERSIDAD DE BURGOS ESCUELA POLITÉCNICA SUPERIOR	***AUTORES DEL PROYECTO:*** D. Alfonso Cid González Dña. Raquel Estrada Merino D. Sergio Agustín Ratón Alomar Dña. Miriam Sacristán Terradillos	***PROYECTO FIN DE CARRERA:*** **PUENTE EN EL PASO DE BOPAL SOBRE EL RÍO GRANDE DE MATAGALPA (NICARAGUA)**	***TUTOR DEL PROYECTO:*** D. Juan Manual Manso Villalaín ***FECHA:*** Febrero de 2012	***TITULO DEL PLANO:*** DETALLES. BARRERA Y SUMIDEROS ***ESCALA:*** 1/15 (0 0.15 0.30 0.45 m) ***PLANO:*** 3.8 ***HOJA:*** 1 de 2

E: 1/25

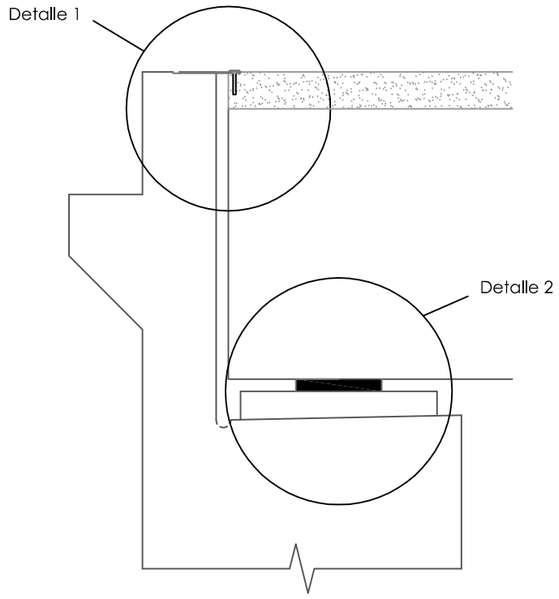

DETALLE 1. JUNTA DE DILATACIÓN

E: 1/5

Cotas en milimetros

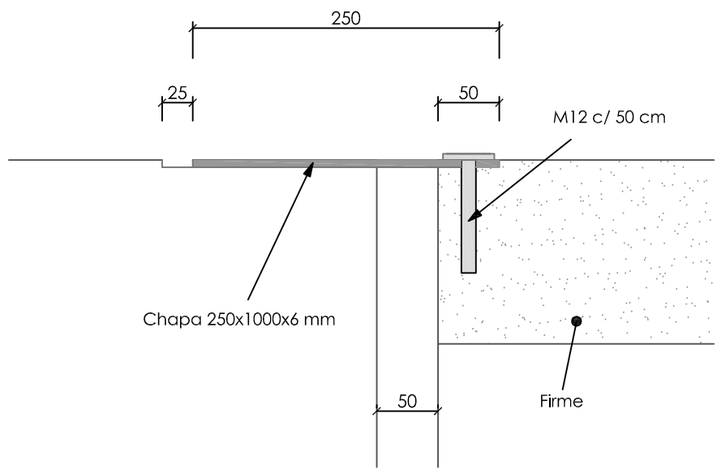

DETALLE 2. NEOPRENO SECCIÓN TRANSVERSAL

E: 1/10

Cotas en milimetros

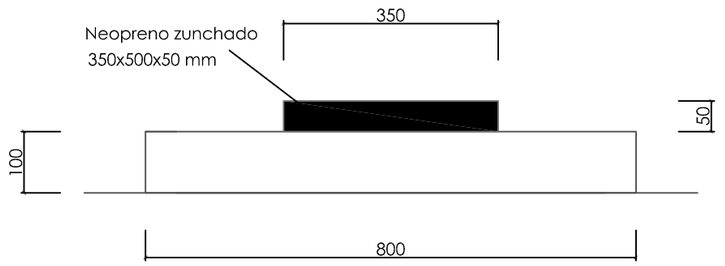

DETALLE 2. NEOPRENO SECCIÓN TRANSVERSAL

E: 1/10

Cotas en milimetros

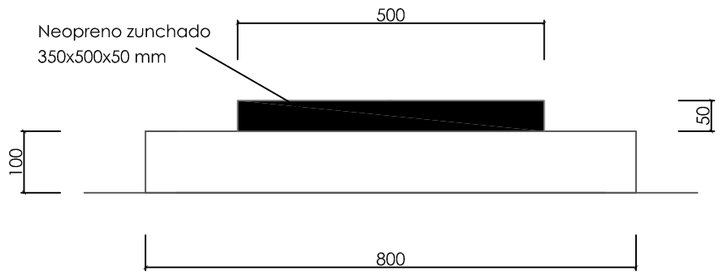

Los apoyos del tablero sobre las pilas y estribos seran apoyos elastoméricos zunchados.

Las dimensiones del neopreno zunchado propuesto para las pilas y estribos son de 350x500x50 mm, siendo el valor de su carga admisible de 2630 KN.

DIAMETROS DE BARRAS CORRUGADAS DE REFUERZO	
Diametros (mm)	Diametros (")
Ø12	Nº4 1/2"
Ø14	Nº5 5/8"
Ø16	Nº6 3/4"
Ø20	Nº7 7/8"
Ø25	Nº8 1"
	Nº9 1-1/8"
Ø32	Nº10 1-1/4"

CUADRO DE CARACTERÍSTICAS SEGÚN EL EUROCODIGO

HORMIGÓN	LOCALIZACIÓN	RESISTENCIA/ CONSISTENCIA/ Ømáx. ÁRIDO/ AMBIENTE	fck N/mm2	NIVEL DE CONTROL	COEF. DE SEGURIDAD Yc
	LIMPIEZA	HM-20 / P / 25	20 (3000 PSI)		
	CIMENTACION	HA-30 / P / 20 / XC2	30 (4500 PSI)	NORMAL	1,50
	ALZADOS	HA-30 / P / 20 / XC2	30 (4500 PSI)	NORMAL	1,50
ARMADURA	TIPO	DESIGNACIÓN	LÍMITE ELÁSTICO fyk N/mm2	NIVEL DE CONTROL	COEF. DE SEGURIDAD Ys
	ACERO PASIVO	B 400 S (Grado 60)	400	NORMAL	1,15
RECUBRIMIENTO NOMINAL		RECUBRIMIENTO MÍNIMO	Cimentaciones: 40 mm	VIDA ÚTIL DE LA ESTRUCTURA: 100 años	
			30 mm	CONTROL DE LA EJECUCIÓN NORMAL	
		Δr	10 mm		
NOTAS	LA DISTANCIA ENTRE CUALQUIER ARMADURA PASIVA Y EL PARAMETRO MAS PROXIMO NO SERA INFERIOR AL VALOR INDICADO. PARA GARANTIZARLO, SE EMPLEARAN LOS OPORTUNOS SEPARADORES.				

UNIVERSIDAD DE BURGOS
ESCUELA POLITÉCNICA SUPERIOR

AUTORES DEL PROYECTO:
D. Alfonso Cid González
Dña. Raquel Estrada Merino
D. Sergio Agustín Ratón Alomar
Dña. Miriam Sacristán Terradillos

PROYECTO FIN DE CARRERA:

PUENTE EN EL PASO DE BOPAL SOBRE EL RÍO GRANDE DE MATAGALPA (NICARAGUA)

TUTOR DEL PROYECTO:
D. Juan Manual Manso Villalaín

FECHA: Febrero de 2012

TITULO DEL PLANO: DETALLES. JUNTA DE DILATACIÓN Y NEOPRENOS

ESCALA: Varias

PLANO: 3.8

HOJA: 2 de 2

ESTADO 1

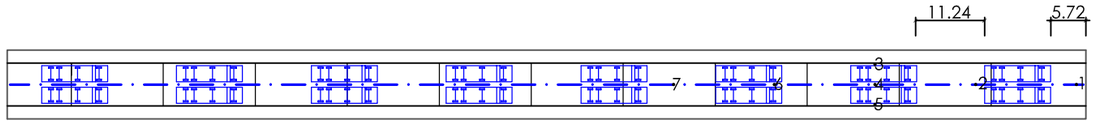

ESTADO 2

ESTADO 3

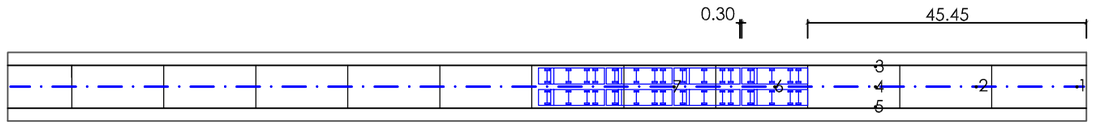

ESTADO 4

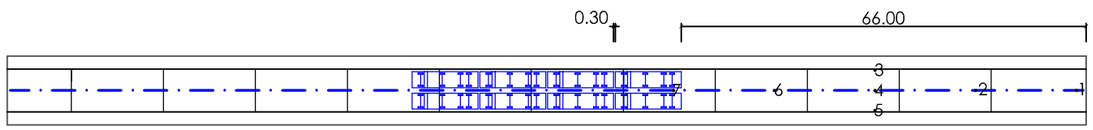

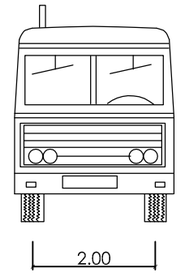

CAMIÓN TIPO 4, EJES DE 380 KN

E: 1/100

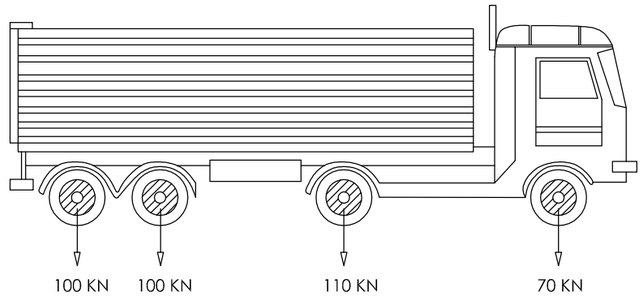

MOVIMIENTO (mm)		ESTADO DE CARGA			
Punto de medida	Nudo	1	2	3	4
1	1939	0.20	0.30	0.00	0.00
2	1923	0.40	0.08	0.04	0.01
3	1385	0.40	0.60	2.00	0.03
4	1907	0.40	0.60	2.00	0.03
5	1211	0.40	0.70	2.00	0.03
6	1891	0.80	0.20	0.90	0.10
7	1874	0.30	0.10	0.40	0.60

El anejo de cálculo recoge los valores de las flechas teóricas y la tolerancia de las obtenidas

Para la medida de desplazamientos se utilizará un aparato con precisión mínima de 0.1 mm

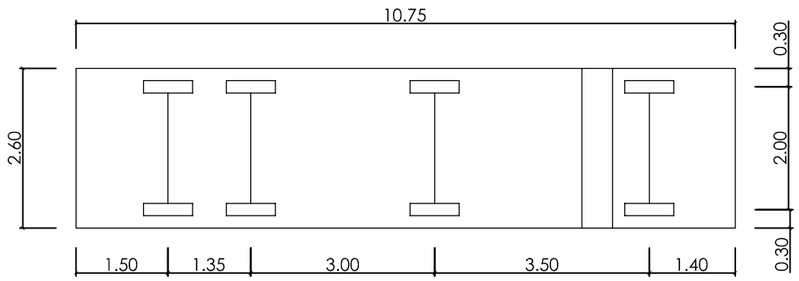

E: 1/1000

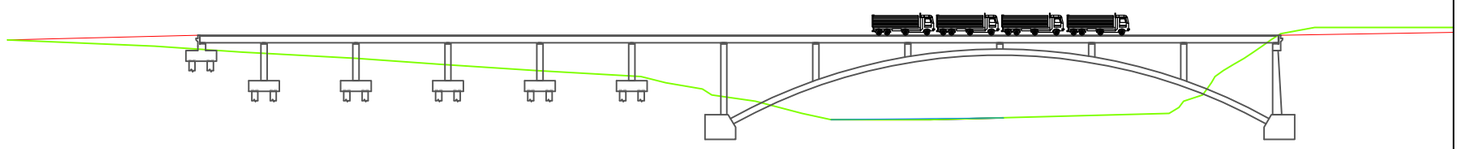

UNIVERSIDAD DE BURGOS
ESCUELA POLITÉCNICA SUPERIOR

AUTORES DEL PROYECTO:
D. Alfonso Cid González
Dña. Raquel Estrada Merino
D. Sergio Agustín Ratón Alomar
Dña. Miriam Sacristán Terradillos

PROYECTO FIN DE CARRERA:

PUENTE EN EL PASO DE BOPAL SOBRE EL RÍO GRANDE DE MATAGALPA (NICARAGUA)

TUTOR DEL PROYECTO:
D. Juan Manual Manso Villalaín

FECHA: Febrero de 2012

TITULO DEL PLANO: PRUEBA DE CARGA

ESCALA: 1/1000 (0 10 20 30 m)

PLANO: 3.9

HOJA: 1 de 1

PLIEGO DE PRESCRIPCIONES TÉCNICAS PARTICULARES

ÍNDICE

Página

1. INTRODUCCIÓN Y GENERALIDADES 7

1.1. DEFINICIÓN 7
1.2. CONDICIONES GENERALES 7
1.2.1. PROPÓSITO DE ESTAS ESPECIFICACIONES 7

2. DIVISIÓN I: REQUISITOS LEGALES, ADMINISTRATIVOS Y AMBIENTALES 7

2.1. SUBDIVISIÓN 100: REQUISITOS LEGALES, ADMINISTRATIVOS Y AMBIENTALES 7
2.1.1. SECCIÓN 101: ABREVIATURAS Y DEFINICIONES 7
2.1.1.1. Sección 101.01: Abreviaturas 7
2.1.1.2. Sección 101.02: Definiciones 8
2.1.2. SECCIÓN 105: ALCANCE DE TRABAJO 8
2.1.2.1. Sección 105.02: Cambios, Condiciones Físicas Diferentes en el Lugar de la Obra.- Variaciones en las Cantidades de Obra 8
2.1.2.2. Sección 105.03: Trabajo Extra 10
2.1.2.3. Sección 105.04: Otros Trabajos Públicos 10
2.1.2.4. Sección 105.04: Cambios Propuestos por el Contratista 11
2.1.2.5. Sección 105.09: Derecho a Usar Materiales Encontrados Dentro de los Límites del Proyecto 13
2.1.2.6. Sección 105.10: Derechos sobre Materiales de Valor Cultural o de Carácter Bélico 13
2.1.2.7. Sección 105.11: Limpieza Final del Lugar de la Obra 13
2.1.3. SECCIÓN 106: CONTROL DEL TRABAJO 14
2.1.3.1. Sección 106.01: Autoridad del Ingeniero 14
2.1.3.2. Sección 106.03: Conformidad con los Planos y Especificaciones 14
2.1.3.3. Sección 106.08: Replanteo y Medición de la Obra 14
2.1.3.4. Sección 106.10: Autoridad y Obligaciones de los Inspectores 15
2.1.3.5. Sección 106.11: Inspección del Trabajo 16
2.1.3.6. Sección 106.12: Remoción de Obras Inaceptables o no Autorizadas 20
2.1.3.7. Sección 106.13: Restricciones sobre las Cargas y Dimensiones de los Vehículos 20
2.1.3.8. Sección 106.14: Mantenimiento de la Obra durante la Construcción 21
2.1.3.9. Sección 106.15: Falta de Mantenimiento de la Vía o de las Estructuras 22
2.1.3.10. Sección 106.16: Aceptación de la Obra 22
2.1.4. SECCIÓN 107: CONTROL DE LOS MATERIALES 25
2.1.4.1. Sección 107.01: Fuentes de Materiales y Requerimientos sobre su Calidad 25
2.1.4.2. Sección 107.02: Marcas de Fábrica y Alternativas 25
2.1.4.3. Sección 107.03: Muestras, Ensayes y Especificaciones de Referencia 26
2.1.4.4. Sección 107.04: Inspección en Planta 26
2.1.4.5. Sección 107.05: Materiales Importados 26
2.1.4.6. Sección 107.06: Materiales Locales 27
2.1.4.7. Sección 107.07: Laboratorio de Campo - Tablero de Avisos 29
2.1.4.8. Sección 107.08: Acopiamiento de Materiales 30
2.1.4.9. Sección 107.09: Manejo de Materiales 30
2.1.4.10. Sección 107.10: Materiales Inaceptables 30
2.1.4.11. Sección 107.11: Materiales Suministrados por el Contratante 30
2.1.5. SECCIÓN 108: RESPONSABILIDADES ANTE LA LEY Y EL PUBLICO 31
2.1.5.1. Sección 108.01: Conocimiento de las Leyes y Reglamentos 31
2.1.5.2. Sección 108.02: Impuestos, Derechos, Gravámenes y Cotizaciones 31
2.1.5.3. Sección 108.03: Permisos 32
2.1.5.4. Sección 108.04: Uso de Dispositivos, Materiales y Procesos Patentados 32
2.1.5.5. Sección 108.05: Certificación sobre Honorarios Condicionales 33
2.1.5.6. Sección 108.06: Traspaso de derechos 33
2.1.5.7. Sección 108.07: Participación de Funcionarios Públicos 33
2.1.5.8. Sección 108.08: Empleo de Trabajadores Convictos 33
2.1.5.9. Sección 108.09: Idioma Contractual 33
2.1.5.10. Sección 108.10: Uso de Personal Nicaragüense y Extranjero 33
2.1.5.11. Sección 108.11: Discriminación en el Empleo 33
2.1.5.12. Sección 108.12: Rotura Autorizada de Superficies 33
2.1.5.13. Sección 108.13: Disposiciones sobre Sanidad y Salubridad 34
2.1.5.14. Sección 108.14: Conveniencia y Seguridad Públicas 34
2.1.5.15. Sección 108.17: Protección y Restauración de la Propiedad y del Paisaje 35
2.1.5.16. Sección 108.19: Protección de Bosques, Parques, Terrenos y Propiedades Públicas 36
2.1.5.17. Sección 108.20: Seguros 37
2.1.5.18. Sección 108.22: Responsabilidad del Contratista con Respecto a la Obra 38
2.1.5.19. Sección 108.23: Responsabilidad del Contratista con Respecto a los Servicios Públicos 38
2.1.5.20. Sección 108.24: Suministro del Derecho de Vía 39
2.1.5.21. Sección 108.25: Responsabilidad Personal de los Funcionarios Públicos en Proyectos del Sector Público 39
2.1.5.22. Sección 108.27: Estadísticas sobre el Personal, el Equipo y las Transacciones – nóminas de pago 39
2.1.5.23. Sección 108.28: Pago de mano de obra 39
2.1.5.24. Sección 108.29: Alojamiento y Comida 39
2.1.5.25. Sección 108.30: Reclamos a Favor de Terceras Personas 40
2.1.5.26. Sección 108.31: Protección Ambiental 40
2.1.6. SECCIÓN 109: EJECUCIÓN Y AVANCE DEL TRABAJO 45
2.1.6.1. Sección 109.01: Subcontratos 45
2.1.6.2. Sección 109.02: Orden de inicio 45
2.1.6.3. Sección 109.03: Reunión de Preconstrucción 46
2.1.6.4. Sección 109.04: Limitación de las Operaciones 46
2.1.6.5. Sección 109.05: Condiciones del Personal.- Métodos y Equipo 46
2.1.6.6. Sección 109.07: Determinación y Extensión del Plazo Contractual 47
2.1.6.7. Sección 109.07: Incumplimiento en la Terminación de la Obra Dentro del Plazo Contractual.- Indemnización por Demoras 48
2.1.6.8. Sección 109.08: Rescisión del Contrato 49
2.1.6.9. Sección 109.09: Suspensión de los Trabajos 51
2.1.6.10. Sección 109.10: Fuerza Mayor 52
2.1.6.11. Sección 109.11: Finiquito del Contrato 53
2.1.7. SECCIÓN 110: MEDICIÓN Y PAGO 53
2.1.7.1. Sección 110.01: Medición de Cantidades de Obra 53
2.1.7.2. Sección 110.02: Pagos Basados en las Cantidades Mostradas en los Planos 53
2.1.7.3. Sección 110.03: Pagos Basados en Mediciones Directas 53
2.1.7.4. Sección 110.04: Alcance de los Pagos 55
2.1.7.5. Sección 110.05: Compensación por Cambios y Modificaciones en las Cantidades 55
2.1.7.6. Sección 110.06: Trabajos por Administración, (A Costo más Porcentaje) 56
2.1.7.7. Sección 110.07: Eliminación de Conceptos de Pago 57
2.1.7.8. Sección 110.08: Pagos al Contratista 57
2.1.7.9. Sección 110.11: Movilización 59
2.1.7.10. Sección 110.11: Anticipos 60
2.1.7.11. Sección 110.12: Tipos de cambios Monetarios 60
2.1.7.12. Sección 110.13: Escalamiento de Precios 61
2.1.7.13. Sección 110.13: Cambios en las Leyes y Reglamentos 62
2.1.8. OTROS ARTÍCULOS A LOS QUE SE HACE REFERENCIA 62
2.1.8.1. Sección 103.03: El Pliego de Bases y Condiciones o Documentos de Licitación y Contratación (DLC) 62
2.1.8.2. Sección 103.05: Conocimiento Obligatorio de los Documentos de Licitación y Contratación y de las Condiciones que Afectan al Trabajo 62
2.1.8.3. Sección 103.07: Interpretación de las Cantidades Mostradas en el Pliego de Licitación 63
2.1.8.4. Sección 106.08: Gastos 63
2.1.8.5. Sección 106.02: Planos y Dibujos de Trabajo 64

2.1.8.6. Sección 106.04: Documentos Constitutivos del Contrato. 64
2.1.8.7. Sección 106.09: Designación del Ingeniero 65
2.1.8.8. Sección 106.17: Reclamos por Ajustes-Controversias-Arbitramento 65

3. DIVISIÓN II: ESPECIFICACIONES TÉCNICAS (DETALLES DE CONSTRUCCIÓN) 67

3.1. SUBDIVISIÓN 200: MOVIMIENTO DE TIERRA 67
3.1.1. SECCIÓN 201: ABRA Y DESTRONQUE 67
3.1.1.1. Sección 201.01: Descripción 67
3.1.1.2. Sección 201.02: Requisitos para la Construcción: Generalidades 67
3.1.1.3. Sección 201.03: Abra y destronque 67
3.1.1.4. Sección 201.04: Descortezado (destape) 69
3.1.1.5. Sección 201.05: Eliminación de Setos 69
3.1.1.6. Sección 201.06: Aceptación 69
3.1.1.7. Sección 201.07: Método de Medición 69
3.1.1.8. Sección 201.08: Base para el pago 70
3.1.2. SECCIÓN 202: REMOCIÓN DE ESTRUCTURAS Y OBSTÁCULOS 70
3.1.2.1. Sección 202.01: Descripción 70
3.1.2.2. Sección 202.02: Requisitos para la Construcción: Generalidades 71
3.1.2.3. Sección 202.03: Remoción de Puentes, Alcantarillas y otras Estructuras de Drenaje 71
3.1.2.4. Sección 202.06: Aceptación 71
3.1.2.5. Sección 202.07: Métodos de Medición 71
3.1.2.6. Sección 202.08: Bases para el Pago 71
3.1.3. SECCIÓN 203: EXCAVACIÓN Y TERRAPLENADO 72
3.1.3.1. Sección 203.01: Descripción 72
3.1.3.2. Sección 203.01: Definiciones 72
3.1.3.3. Sección 203.03: Materiales 72
3.1.3.4. Sección 203.04: Preparación para la Excavación en la Vía y la Construcción de Terraplenes 72
3.1.3.5. Sección 203.05: Conservación de Tierra Vegetal 72
3.1.3.6. Sección 203.06: Excavación de la Vía 72
3.1.3.7. Sección 203.07: Subexcavación 73
3.1.3.8. Sección 203.08: Excavación de Préstamo 73
3.1.3.9. Sección 203.10: Construcción del Terraplén 73
3.1.3.10. Sección 203.11: Compactación 74
3.1.3.11. Sección 203.13: Taludes, Conformado Y Acabado 74
3.1.3.12. Sección 203.14: Desecho de Materiales Inadecuados o Excedentes 74
3.1.3.13. Sección 203.15: Aceptación 74
3.1.3.14. Sección 203.16: Método de Medición 74
3.1.3.15. Sección 203.17 : Base para el Pago 76
3.1.4. SECCIÓN 206: SOBREACARREO 76
3.1.4.1. Sección 206.01: Definición 76
3.1.4.2. Sección 206.02: Métodos de Medición 76
3.1.5. SECCIÓN 207: EXCAVACIÓN PARA ESTRUCTURAS 77
3.1.5.1. Sección 207.01: Descripción- Generalidades 77
3.1.5.2. Sección 207.02: Materiales 77
3.1.5.3. Sección 207.03: Requisitos para la Construcción-Abra y Destronque 77
3.1.5.4. Sección 207.04: Excavación 77
3.1.5.5. Sección 207.05: Utilización de los Materiales excavados 78
3.1.5.6. Sección 207.07: Relleno y Terraplenes para Estructuras que no sean Alcantarillas de Tubo 78
3.1.5.7. Sección 207.09: Aceptación 79
3.1.5.8. Sección 207.10: Métodos de Medición: Excavación para Estructuras 79
3.1.5.9. Sección 207.09: Excavación para Puentes 79
3.1.5.10. Sección 207.12: Relleno para Cimentación 80
3.1.5.11. Sección 207.13: Relleno Estructural 80
3.1.5.12. Sección 207.15: Bases para el Pago 80

3.2. SUBDIVISIÓN 500: PAVIMENTOS RÍGIDOS Y SEMI-RÍGIDOS 80
3.2.1. SECCION 501: PAVIMENTOS DE CONCRETO DE CEMENTO HIDRÁULICO 80
3.2.1.1. Sección 501.01: Descripción 80
3.2.1.2. Sección 501.02: Materiales 80
3.2.1.3. Sección 501.03: Requisitos para la Construcción-Composición de la Mezcla (Diseño de la Mezcla de Concreto) 81
3.2.1.4. Sección 501.04: Equipo 81
3.2.1.5. Sección 501.06: Colocación de las Formaletas 83
3.2.1.6. Sección 501.08: Manipulación, Medición y Dosificación de los Materiales 83
3.2.1.7. Sección 501.09: Revoltura del Concreto 84
3.2.1.8. Sección 501.10: Limitaciones en la Revoltura 85
3.2.1.9. Sección 501.11. Colocación del Concreto 85
3.2.1.10. Sección 501.12: Muestras para Ensayes de Campo 85
3.2.1.11. Sección 501.13: Enrase del Concreto y Colocación del Refuerzo 86
3.2.1.12. Sección 501.14. Juntas 86
3.2.1.13. Sección 501.15: Esparcido, Consolidación y Acabado Finales 87
3.2.1.14. Sección 501.18: Remoción de Formaletas 89
3.2.1.15. Sección 501.19: Selladura de Juntas 89
3.2.1.16. Sección 501.20: Protección del Pavimento 89
3.2.1.17. Sección 501.21: Apertura al Tráfico 90
3.2.1.18. Sección 501.23: Lisura del Pavimento 90
3.2.1.19. Sección 501.24: Tolerancia en el Espesor del Pavimento 90
3.2.1.20. Sección 501.25: Aceptación 91
3.2.1.21. Sección 501.26: Método de Medición 91
3.2.1.22. Sección 501.27: Base para el Pago 91
3.3. SUBDIVISIÓN 600: PUENTES 92
3.3.1. SECCIÓN 601: PILOTES 92
3.3.1.1. Sección 601.01: Descripción 92
3.3.1.2. Sección 601.02: Materiales 92
3.3.1.3. Sección 601.11: Pruebas de Carga de Pilotes 92
3.3.1.4. Sección 601.12: Recorte de Pilotes 92
3.3.1.5. Sección 601.14: Colocación del Concreto en Pilotes de Camisa o Tubo de Acero 92
3.3.1.6. Sección 601.15: Aceptación 93
3.3.2. SECCIÓN 602: CONCRETO ESTRUCTURAL 93
3.3.2.1. Sección 602.01: Descripción 93
3.3.2.2. Sección 602.02: Materiales 93
3.3.2.3. Sección 602.03: Requisitos para la construcción: Composición (Diseño de la Mezcla de Concreto) 93
3.3.2.4. Sección 602.04: Acopio y Manipulación del Material 95
3.3.2.5. Sección 602.05: Medición de los Materiales 95
3.3.2.6. Sección 602.06: Planta Dosificadora, Mezcladoras y Agitadores 96
3.3.2.7. Sección 602.07: Revoltura 96
3.3.2.8. Sección 602.05: Entrega 96
3.3.2.9. Sección 602.09: Control de Calidad-Muestreo y Ensaye 97
3.3.2.10. 602.10: Condiciones de Temperatura y del Tiempo 98
3.3.2.11. Sección 602.11: Obras Falsa y Formaletas 99
3.3.2.12. Sección 602.12: Manipulación y Colocación del Concreto 102
3.3.2.13. Sección 602.13: Juntas de Construcción 104
3.3.2.14. Sección 602.14: Juntas de Expansión y de Contracción 104
3.3.2.15. Sección 602.15: Acabado del Concreto Plástico 105
3.3.2.16. Sección 602.14: Curación del Concreto 107
3.3.2.17. Sección 602.17: Acabado de Superficies de Concreto Coladas en Formaletas 107
3.3.2.18. Sección 602.19: Cargas sobre Estructuras Nuevas de Concreto 109
3.3.2.19. Sección 602.20: Aceptación 109
3.3.2.20. Sección 602.21: Método de Medición 110
3.3.2.21. Sección 602.22: Base para el Pago 110

3.3.3. SECCIÓN 604: ACERO DE REFUERZO 110
3.3.3.1. Sección 604.01: Descripción 110
3.3.3.2. Sección 604.02: Materiales 110
3.3.3.3. Sección 604.03: Lista de Pedidos del Material 110
3.3.3.4. Sección 604.04: Protección de los Materiales 111
3.3.3.5. Sección 604.05: Dobladura 111
3.3.3.6. Sección 604.06: Colocación y Amarre 111
3.3.3.7. Sección 604.07: Aceptación 112
3.3.3.8. Sección 604.08: Método de Medición 112
3.3.3.9. Sección 604.09: Bases para el Pago 112
3.3.4. SECCIÓN 606: BARANDAS DE PUENTES Y VIADUCTOS 112
3.3.4.1. Sección 606.01: Extensión 112
3.3.4.2. Sección 606.02: Clasificación 112
3.3.4.3. Sección 606.03: Materiales 112
3.3.4.4. Sección 606.04: Generalidades 113
3.3.4.5. Sección 606.07: Barandas de Acero 113
3.3.4.6. Sección 606.11: Aceptación 113
3.3.4.7. Sección 606.12: Medición 113
3.3.4.8. Sección 606.13: Bases para el Pago 114
3.3.5. SECCIÓN 611: DISPOSITIVOS DE APOYO 114
3.3.5.1. Sección 611.01: Descripción 114
3.3.5.2. Sección 611.02: Materiales 114
3.3.5.3. Sección 611.03: Generalidades 114
3.3.5.4. Sección 611.04: Apoyos Elastoméricos 115
3.3.5.5. Sección 611.08: Pernos de Anclaje 115
3.3.5.6. Sección 611.11: Método de Medición 116
3.3.5.7. Sección 611.12: Base para el Pago 116

4. DIVISIÓN III: ESPECIFICACIONES DE CALIDAD DE LOS MATERIALES 116

4.1. SUBDIVISIÓN 1000: ESPECIFICACIONES DE CALIDAD DE LOS MATERIALES 116
4.1.1. SECCIÓN 1001: CEMENTO HIDRÁULICO 116
4.1.1.1. Sección 1001.01: Cemento Portland y Cemento para Mampostería 116
4.1.2. SECCIÓN 1003: AGREGADOS, SUELOS Y ROCA 116
4.1.2.1. Sección 1003.01: Agregado Fino para Concreto de Cemento Portland 116
4.1.2.2. Sección 1003.02: Material Grueso para Concreto de Cemento Portland 117
4.1.2.3. Sección 1003.20: Relleno Estructural 117
4.1.2.4. Sección 1003.24: Suelos 117
4.1.3. SECCIÓN 1005: MATERIALES PARA JUNTAS Y GRIETAS 118
4.1.3.1. Sección 1005:01: Rellenos para Juntas, Selladores, Sellos y Camisas 118
4.1.4. SECCIÓN 1009: ACERO DE REFUERZO Y CABLE DE ALAMBRE 119
4.1.4.1. Sección 1009.01: Acero de Refuerzo 119
4.1.5. SECCIÓN 1011: MATERIALES PARA CURADO DEL CONCRETO Y ADITIVOS 120
4.1.5.1. Sección 1011.01: Materiales para el Curado 120
4.1.5.2. Sección 1011.02: Aditivos para Inclusión de Aire 120
4.1.5.3. Sección 1011.03: Aditivos Químicos 120
4.1.5.4. Sección 1011.04: Modificados de Latex 120
4.1.6. SECCIÓN 1012: MATERIALES VARIOS 121
4.1.6.1. Sección 1012.01: Agua 121
4.1.6.2. Sección 1012.04: Colorante para Revestir Concreto 121
4.1.6.3. Sección 1012.09: Recubrimientos Protectores del Concreto 121
4.1.6.4. Sección 1012.10: Materiales Puzolánicos 121
4.1.6.5. Sección 1012.15: Lechada 121
4.1.7. SECCIÓN 1013: MATERIALES PARA MEJORAS A LOS LADOS DE LA VÍA Y PARA CONTROL DE LA EROSIÓN 122
4.1.7.1. Sección 1013.08: Materiales Misceláneos 122
4.1.8. SECCIÓN 1015: PILOTES 122
4.1.8.1. Sección 1015.03: Pilotes de Concreto 122
4.1.8.2. Sección 1015.04: Cubiertas de Acero 123
4.1.9. SECCIÓN 1017: METAL ESTRUCTURAL 123
4.1.9.1. Sección 1017.13: Almohadillas Elastoméricas de Apoyo 123
4.1.9.2. Sección 1017.14: Aleación de Aluminio Estructural 123
4.1.9.3. Sección 1017.16: Cabezas de Pernos y Tuercas de Aluminio 123
4.1.9.4. Sección 1017.17: Alambre para Soldar Aluminio 123
4.1.9.5. Sección 1017.18: Sellos Elastoméricos de Compresión para Juntas 123
4.1.9.6. Sección 1017.20: Superficies de Tetrafluoretileno (TFE) para Apoyos 124

1. INTRODUCCIÓN Y GENERALIDADES

1.1. DEFINICIÓN

El presente Pliego de Prescripciones Técnicas Particulares tiene como objeto definir las condiciones singulares que complementan, concretan o modifican las establecidas en el Pliego de Especificaciones Generales para la Construcción de Caminos, Calles y Puentes (NIC-2000).

La NIC-2000, aprobada en abril de 2002, es el resultado de la revisión y actualización del libro del mismo nombre publicado en 1980, que había estado usando desde ese año el Ministerio de Construcción y Transporte y que posteriormente ha venido usando el Ministerio de Transporte e Infraestructura, en la construcción y rehabilitación de caminos, carreteras y puentes.

La revisión se realizó mediante la investigación y compilación de especificaciones modernas.

En la revisión, se mantiene en las NIC-2000, la distribución del contenido de las especificaciones anteriores en tres divisiones, a saber:

- DIVISIÓN I: Requisitos Legales, Administrativos y Ambientales.
- DIVISIÓN II: Especificaciones Técnicas (Detalles Constructivos).
- DIVISIÓN III: Especificaciones de Calidad de los Materiales.

1.2. CONDICIONES GENERALES

1.2.1. PROPÓSITO DE ESTAS ESPECIFICACIONES

Estas Especificaciones Técnicas son Generales y se refieren a todos los aspectos de la construcción. En el caso que algún tipo de actividad no esté incluida en estas especificaciones, es deber del Contratista hacer la obra de manera técnicamente correcta y sin ninguna mala intención, es decir, no debe valerse del hecho que no esté incluida en las especificaciones.

El Contratista debe revisar el pliego de licitación e incluir en su oferta las actividades que considera necesarias para ejecutar la obra conforme lo detallan los planos suministrados por el Dueño.

2. DIVISIÓN I: REQUISITOS LEGALES, ADMINISTRATIVOS Y AMBIENTALES

2.1. SUBDIVISIÓN 100: REQUISITOS LEGALES, ADMINISTRATIVOS Y AMBIENTALES

2.1.1. SECCIÓN 101: ABREVIATURAS Y DEFINICIONES

2.1.1.1. Sección 101.01: Abreviaturas

Dondequiera que en las especificaciones, en los planos u otros documentos de licitación y contractuales se empleen las siguientes abreviaturas, se les dará la siguiente significación:

101.01(a) Autoridades e Instituciones Estatales Reguladoras de Nicaragua.-

ALMA- Alcaldía de Managua.

DGV- Dirección General de Vialidad del MTI.

INETER- Instituto Nicaragüense de Estudios Territoriales.

MAG-FOR Ministerio Agropecuario y Forestal.

MARENA- Ministerio del Ambiente y Recursos Naturales.

MINGOB- Ministerio de Gobernación.

MINSA- Ministerio de Salud.

MITRAB- Ministerio del Trabajo.

MTI- Ministerio de Transporte e Infraestructura.

UE- Unidad Ejecutora del Proyecto (de la Institución Contratante).

UCP- Unidad Coordinadora del Proyecto (de la Institución Contratante).

101.01(b) Instituciones Internacionales de Normalización Técnica.

AASHTO- "American Association of State Highway and Transportation Officials" (Asociación de Autoridades Estatales de Carreteras y Transporte de (EE.UU).

ACI- "American Concrete Institute" (Instituto para el Concreto de EE.UU).

ACPA- American Concrete Pavement Association" (Asociación para Pavimentos de Concreto de EE.UU).

AGC- "Associated General Contractors of America" (Asociación de Contratistas Generales de EE.UU).

AISC- "American Institute of Steel Construction" (Instituto para las Construcciones de Acero de EE.UU).

AISI- "American Iron and Steel Institute" (Instituto para el Hierro y el Acero de EE.UU).

ANSI- "American National Standards Institute (Instituto Nacional de Normas de EE.UU).

APWA- "American Public Works Association" (Asociación para las Obras Públicas de EE.UU).

ARTBA- "American Road and Transportation Builders Association" (Asociación de Constructores de Caminos y de Transporte de EE.UU).

ASCE- "American Society of Civil Engineers" (Asociación de Ingenieros Civiles de EE.UU).

ASTM- "American Society for Testing and Materials" (Asociación para Ensayes y Materiales de EE.UU).

ATSSA- "American Traffic Safety Services Association" (Asociación para Servicios de Seguridad de Tráfico de EE.UU).

AWS- "American Welding Society" (Sociedad para la Soldadura de EE.UU).

CFR- "Code of Federal Regulations" (Código de Regulaciones Federales de EE.UU).

CRSI- "Concrete Reinforcing Steel Institute" (Instituto para el Acero de Refuerzo del Concreto de EE.UU).

EPA- "Environmental Protection Agency" (Agencia para la Protección Ambiental de EE.UU).

FTMS- "Federal Test Method Standard" (Norma Federal del Método de Prueba de EE.UU)

ISO- "International Standardization Organization" (Organización Internacional para la Normalización).

ITE- "Institute of Transportation Engineers" (Instituto de Ingenieros de Transporte de EE.UU).

PCA- "Portland Cement Association" (Asociación del Cemento Portland de EE.UU).

2.1.1.2. Sección 101.02: Definiciones

CGC: Condiciones Generales de Contrato. Conjunto de disposiciones generales de carácter legal, administrativo y ambiental que regulan la ejecución del contrato.

CEC: Condiciones Especiales de Contrato. Son las adiciones, supresiones y modificaciones a las Especificaciones Generales y Especificaciones Suplementarias con el fin de cubrir las condiciones peculiares a un proyecto individual.

DLC: Documentos de Licitación y Contratación. Estos son el conjunto de documentos emitidos por el Contratante, que especifican detalladamente las obras, bienes o servicios cuya ejecución o adquisición desea contratar mediante el procedimiento de selección de contratistas conocido como licitación, describen el trámite a seguir en dicho proceso y en la adjudicación y formalización del contrato, así como las condiciones que regirán en la ejecución de las obras o el suministro de los bienes o servicios contratados.

IGO: Instrucciones Generales a los Oferentes. Estas proveen la información necesaria para que los Oferentes puedan preparar sus ofertas. También proveen información sobre la presentación, apertura y evaluación de las ofertas y sobre la adjudicación del Contrato.

IEO: Instrucciones Especiales a los Oferentes. Estas contienen las disposiciones que son propias de cada licitación y que complementan la información o los requisitos indicados en las IGO. Estas van incluidas en los DLC.

NABCV: Normas Ambientales Básicas para la Construcción Vial.

2.1.2. SECCIÓN 105: ALCANCE DE TRABAJO

2.1.2.1. Sección 105.02: Cambios, Condiciones Físicas Diferentes en el Lugar de la Obra.- Variaciones en las Cantidades de Obra

1.- Cambios.- Queda mutuamente convenido que es inherente a la naturaleza de la construcción de caminos, calles y puentes, la posibilidad de introducir alteraciones, desviaciones, adiciones y supresiones en los documentos contractuales posteriormente a la adjudicación y firma del Contrato, a fin de construir la obra en la forma más adecuada, técnica y económicamente, y de acuerdo con las conveniencias del Contratante, factores varían frecuentemente durante el curso de las operaciones constructivas, tanto por criterios técnicos o económicos como por el hallazgo de condiciones físicas desconocidas

previamente u ocultas en el lugar de las obras, diferentes a las consideradas en el Contrato. Por lo tanto, es natural y esencial en el Contrato considerar un margen normal y razonable de cambios con relación a lo indicado en los documentos contractuales originales sin que por ello quede invalidado el Contrato. En consecuencia:

1.1) El Contratante se reserva el derecho de, en cualquier oportunidad y sin necesidad de avisar al Garante, por medio de una orden escrita denominada Orden de Cambio, para hacer cualquier cambio en la obra, que esté dentro del objetivo general del Contrato, incluyendo, aunque sin limitarse a:

1.1.1) Cambios en las especificaciones, incluyendo planos y dibujos de trabajo;

1.1.2) Cambios en el método o manera de ejecutar los trabajos;

1.1.3) Cambios en las facilidades, equipo, materiales, servicios, Derecho de Vía y servidumbres que hubiera ofrecido suministrar el Contratante dentro de las condiciones de la licitación; y

1.1.4) Cambios en el avance programado para construir el total o parte de las obras.

1.2) Cualquier otra orden, escrita o verbal, emitida por el Contratante, que cause cualquier cambio de los mencionados en el inciso 1.1 de este artículo, deberá ser tenida como una **Orden de Cambio**, según los términos de este artículo, a condición de que el Contratista entregue al Contratante y al Ingeniero una nota escrita en un plazo máximo de 15 días después de recibida la orden escrita o verbal, en que además de especificar la fecha, circunstancias y origen de la orden, concuerde en que se trata de una **Orden de Cambio.** El vocablo **orden**, tal como se le deberá interpretar en este inciso, se refiere a dirección, instrucción, interpretación o determinación del Contratante.

1.3) Fuera de lo dispuesto en los incisos 1.1 y 1.2 que anteceden, respecto a la calificación de lo que constituye una Orden de Cambio, ninguna orden, declaración o conducta del Contratante podrá ser interpretada como "cambio", en el sentido indicado en esos incisos, o dará derecho al Contratista para reclamar un ajuste equitativo de conformidad con los términos del inciso 1.4 que sigue.

1.4) Si cualquier "cambio" de la índole señalada en los incisos anteriores causa un aumento o disminución en el costo del Contratista para ejecutar cualquier parte de la obra contratada o en el plazo de ejecución o en ambos, aun en el caso de que no hubiese sido ordenado por el Contratante, éste hará un ajuste equitativo, en el costo o en el plazo de ejecución o en ambos, introduciendo la modificación pertinente en el Contrato, BAJO EL ENTENDIDO de que, exceptuando el caso de reclamos basados en especificaciones defectuosas, no se hará ajuste alguno en costos en que hubiera incurrido el Contratista si no cumple con entregar la nota de que se hace mención en el inciso 1.2 y, además, en el caso de reclamos por especificaciones defectuosas por las cuales es responsable el Contratante, el ajuste equitativo compense, exclusivamente, el incremento que el Contratista haya experimentado en sus costos en su intento de cumplir con dichas especificaciones defectuosas.

1.5) Si el Contratista tiene el propósito de reclamar un ajuste equitativo de los mencionados en el inciso anterior, deberá entregar por escrito al Contratante una PROTESTA, dentro de un plazo de QUINCE (15) días después de recibir por escrito una orden para efectuar cambios como los descritos en el inciso (1.1) de este artículo o de una orden de la naturaleza indicada en el inciso (1.2) del mismo; en dicha PROTESTA el Contratista dará a conocer al Contratante los fundamentos de su desacuerdo, citando condiciones contractuales, especificaciones, referencias, circunstancias, cantidades y posible monto del ajuste en dinero, extensión en el plazo o en ambos. El plazo para la entrega de esta protesta podría ser ampliado por el Contratante si hubiera justificación para ello, pero también podrá ser anexada a la nota a que se refiere el inciso (1.2) de este artículo.

1.6) El Contratante no considerará ningún ajuste equitativo del tipo mencionado en el inciso 1.4 que sea presentado por el Contratista después de efectuado el pago final de este Contrato de conformidad con el Artículo-110.08, Cláusula 11, de estas CGC.

2.- Condiciones Diferentes en el Lugar de las Obras.-

2.1) Si en el curso de las operaciones constructivas el Contratista encontrara en cualquier lugar del Proyecto:

2.1.1) Condiciones físicas subterráneas u ocultas que difieran considerablemente de las indicadas en el Contrato, o.

2.1.2) Condiciones físicas desconocidas, de naturaleza extraña y que difieran considerablemente de las que son generalmente reconocidas como inherentes a los trabajos de la índole de los amparados por este Contrato, deberá notificar sin demora al Ingeniero, antes de alterar las condiciones encontradas en el sitio. Al recibo de esta notificación, el Ingeniero investigará con toda prontitud las mencionadas condiciones y, si encuentra que, efectivamente, difieren considerablemente de las condiciones normales y que causarán un

aumento o disminución en los costos del Contratista para construir cualquier parte de la obra bajo Contrato, en el tiempo requerido para ello o en ambos, se hagan o no cambios en los planos o especificaciones como resultado de tales condiciones, se hará un ajuste equitativo, para lo cual el Contrato será modificado por escrito, de conformidad con los hechos.

2.2) El Contratante no considerará ningún reclamo de la naturaleza mencionada en el inciso (2.1) si:

a) El Contratista no notifica al Ingeniero en la forma allí indicada, aunque, si hay justificación para ello, el Contratante podrá extender el plazo prescrito.

b) El reclamo es presentado después de efectuado el pago final de este Contrato de conformidad con el Artículo-110.08, Cláusula 11, de estas CGC.

3.- Variaciones en las Cantidades de las Obras.- De conformidad con las estipulaciones contenidas en las Cláusulas 1 y 2 de este artículo, ha quedado establecido que durante el curso de la construcción de las obras bajo Contrato, por su misma naturaleza, o bien, por condiciones desconocidas y extrañas del terreno, es posible que el Ingeniero se vea obligado a introducir cambios, y que, aun sin que el Ingeniero introduzca cambio alguno en los documentos contractuales, en la medición final de las obras ya concluidas, se encuentren variaciones en las cantidades de obras realizadas y que éstas sean mayores o menores que las originalmente estimadas durante el diseño y que sirvieron de base para la contratación. De este riesgo es advertido el Oferente en el Artículo-103.08, y, además en el Artículo-103.05 de las IGO.

En consecuencia, el Contratante ha establecido que ninguna de las partes tiene derecho a reclamar ajustes en los precios unitarios de los conceptos afectados, si el margen de aumento o disminución en las cantidades finales de los Conceptos Mayores del Contrato o en los que se conviertan por cambios posteriores en mayores, está en un rango de un 25% con relación a las cantidades originales mostradas en el Pliego de Licitación.

El pago por el aumento o disminución de las cantidades de obra será efectuado de conformidad con lo establecido en el Artículo-110.05 de estas CGC. Si la magnitud de las variaciones es tal que justifiquen una extensión en el plazo contractual, el ajuste de éste será determinado de conformidad con lo establecido en el Artículo 109.06, de estas CGC.

Los ajustes considerados en esta Cláusula 3 se refieren exclusivamente a cantidades de obra. Cualquier ajuste equitativo por cambios en la **naturaleza** de los trabajos será efectuado de conformidad con la Cláusula 2 de este mismo artículo.

2.1.2.2. Sección 105.03: Trabajo Extra

El Contratante se reserva el derecho de ordenar al Contratista, la ejecución de trabajos nuevos o no previstos en el Contrato original, dentro de márgenes razonables, ya sea para completar más adecuadamente las obras bajo contrato o bien, por motivos de conveniencia o necesidad pública (incluyendo los casos de emergencia nacional), sean trabajos dentro o fuera del Derecho de Vía o más allá de los límites establecidos para el Proyecto. Los trabajos de esta índole serán considerados como TRABAJO EXTRA, si el Ingeniero determina que no hay en el Contrato ningún concepto o combinación de conceptos de pago para compensar su ejecución. En el caso de que parte de tales trabajos estuviera amparada por un concepto o combinación de conceptos de pago existentes en el Contrato, la parte restante de dichos trabajos será la clasificada como TRABAJO EXTRA. También será considerado como extra, todo trabajo específicamente designado como tal en los planos o especificaciones.

El Contratista procederá a ejecutar todo trabajo extra y a suministrar la mano de obra, materiales, equipo, administración e imprevistos requeridos para completarlo, si ha recibido y aceptado una Orden de Cambio o cualquier orden escrita del Ingeniero; de no existir las órdenes aquí mencionadas, el Contratista no tendrá derecho a reclamar compensación alguna por el trabajo extra que haya efectuado.

En el caso de que una Orden de Cambio no haya sido aceptada o, en el caso de que el Ingeniero y el Contratista no estén de acuerdo sobre los precios, el pago por trabajo extra ordenado de conformidad con este artículo, será efectuado de conformidad con las estipulaciones del Artículo-110.06, de estas **CGC**.

2.1.2.3. Sección 105.04: Otros Trabajos Públicos

Si en el área de un proyecto del Gobierno Central, hubiera otros trabajos públicos, que estuvieran siendo ejecutados directamente por el Gobierno Central (incluyendo sus Entes Descentralizados o Autónomos) o Municipalidades, por contrato con el mismo o con otros contratistas, que requirieran que el Contratista suministrara materiales de construcción tales como roca natural o procesada, arena, tierra, madera, etc., o servicios de transporte para los mismos, o el alquiler de maquinaria de construcción, entonces, el Contratista podrá suministrar

tales materiales o servicios, sin causar atrasos o de otra manera afectar desfavorablemente a las obras incluidas en este Contrato, si el Ingeniero lo aprueba u ordena por escrito, sin que tales trabajos adicionales sean interpretados como base para reclamar ajustas en los precios o en el plazo del Contrato.

2.1.2.4. Sección 105.04: Cambios Propuestos por el Contratista

1.- Definición.-. Es posible que el Contratista, por su experiencia, recursos y otros factores, encuentre y proponga al Contratante una manera de construir una obra, de iguales o mejores características que la propuesta en el Contrato, a un costo total más bajo que el estimado por el Contratante, introduciendo cambios en los documentos contractuales originales, bajo la condición de compartir con el Contratante las utilidades adicionales a obtener. Es este el tipo de "CAMBIOS" a que se refiere el presente artículo y sólo serán considerados por el Contratante si la solicitud del Contratista se acoge a las disposiciones específicas aquí contenidas y no deberán ser confundidos con otros tipos de cambios menores que estén considerados en cualquier otra parte de estas CGC.

2.- Información Requerida. El Contratista deberá adjuntar a su propuesta, como mínimo, la siguiente información:

2.1) Una descripción de la diferencia entre los requerimientos del Contrato y los del cambio propuesto, así como de las ventajas y desventajas de unos y otros;

2.2) Una enumeración detallada de los requerimientos del Contrato que deberían ser cambiados al ser aceptada la propuesta, y una recomendación sobre la manera de efectuar cada uno de dichos cambios en el mismo, o sea, sugerir la redacción de los cambios;

2.3) Una estimación de la reducción en los costos totales de ejecución que sería obtenida al adoptar la propuesta, tomando en consideración los costos del Contratista en la preparación de los cambios en los planos, las especificaciones o en ambos y en las condiciones, y en la puesta en obra de los mismos, incluyendo cualquier suma atribuible a subcontratos a que se refiere la Cláusula 5 de este mismo artículo, así como los fundamentos del estimado de costos;

2.4) Un pronóstico sobre cualesquier efectos que el cambio tendría en los costos colaterales que recaerían sobre el Contratante, los costos de conceptos involucrados, en el Impacto Ambiental y costo de mitigación, y en los costos de mantenimiento y operación;

2.5) Una exposición sobre la fecha aproximada en que debería ser emitida la Orden de Cambio pertinente en que se adoptaría la propuesta, con el objeto de obtener la máxima reducción en el costo a través de lo que falte para concluir todas las obras bajo Contrato, haciendo notar cualquier efecto que se produciría en el plazo contractual o programa de entrega;

2.6) Las fechas de similares propuestas hechas en otras oportunidades o simultáneamente, al Contratante (si acaso las hubiera hecho), los números de los contratos con el Contratante en que dichas propuestas fueron presentadas, y las acciones tomadas por el Contratante, en esas oportunidades, si es que le son conocidas.

3.- Tramitación de las Propuestas.-

3.1) Las propuestas de **cambios** para reducción de costos presentadas por el Contratista al amparo de este artículo, serán tramitadas con la debida premura; sin embargo, el Contratante no será responsable por cualquier demora que se produjera durante el proceso de su tramitación. El Contratista tendrá el derecho de retirar, en su totalidad o en parte, cualquier propuesta de esta naturaleza que no haya sido aceptada y aprobada por el Contratante, dentro del plazo especificado en ella. La decisión del Contratante en cuanto a aceptar o no esta clase de propuestas será definitiva y terminante y no estará sujeta a las disposiciones del CGC.

3.2) Antes de que las obras incluidas en el Contrato hayan sido totalmente concluidas, el Contratante podrá aceptar, en su totalidad o en parte, cualquier propuesta para reducción de costos, que haya sido sometida por el Contratista al amparo de las disposiciones de este artículo y que no hubiere sido retirada por él de acuerdo con el inciso 3.1 que antecede, dando al Contratista una notificación por escrito de su aceptación. Esta notificación podrá ser hecha simplemente emitiendo la Orden de Cambio respectiva en la cual se modifique el Contrato Original al amparo de las disposiciones de este artículo. A menos que hubiera sido aprobada por el Contratante una Orden de Cambio u otro tipo de modificación al Contrato Original (Acuerdo Suplementario, por ejemplo), relativas a cambios propuestos para lograr rebajas en el costo, objeto de este artículo, el Contratista estará obligado a ejecutar las obras de conformidad con el Contrato Original;

3.3) Cualquier documento de respaldo a una modificación introducida en el Contrato Original, que haya sido aceptada por el Contratante al amparo de las disposiciones de este artículo, deberá especificarlo así clara y explícitamente.

4.- Procedimiento de Valuación de las Rebajas.-

4.1) Si el Contratante acepta y aprueba una propuesta de cambios hecha por el Contratista con el propósito de rebajar los costos de la obra, se hará un ajuste equitativo en el valor original del Contrato y en cualesquier otras disposiciones contractuales que resultaren afectadas, de conformidad con lo estipulado en este y otros artículos del Contrato que sean aplicables. El ajuste equitativo será calculado determinando el efecto de la propuesta en los costos totales del Contratista para ejecutarla, tomando en consideración los costos en que incurrirá en la investigación y desarrollo de la propuesta, siempre que estos costos sean directamente causados por el cambio y no estén reembolsados en otra forma bajo este Contrato, y los costos de ejecución de las obras sujetas al cambio, incluyendo cualquier suma atribuible a subcontratistas, según lo dispone la Cláusula siguiente. El valor original del Contrato será entonces reducido en un monto que será determinado así: A la disminución total estimada en el costo del Contratista se le restará el cincuenta por ciento (50%) de la diferencia entre el monto de dicha disminución total estimada y cualquier aumento neto en los costos colaterales determinables en que pudiera haber razonablemente incurrido el Contratante como resultado de la aplicación de la mencionada propuesta al Contrato.

5.- Subcontratos.- El Contratista deberá realizar sus mejores esfuerzos para incluir arreglos adecuados y consecuentes con los objetivos del cambio propuesto, de obtener una disminución en el costo, en cualquier subcontrato que, a su juicio, sea de tal naturaleza y magnitud que se preste razonablemente a esta clase de rebajas. Con el propósito de calcular un ajuste equitativo en el valor original del Contrato, de conformidad con la Cláusula anterior, se considerará que el costo del Contratista por el desarrollo y puesta en obra de una propuesta de cambios de esta naturaleza, que sea aceptada y aprobada por el Contratante, incluye cualesquier costos de desarrollo y ejecución de los subcontratistas, más el costo de los incentivos hechos efectivos a los mismos o la participación de los subcontratistas en la rebaja en costos claramente involucrados en la propuesta y en los que se incurra o sean pagados o se acumulen en virtud de la realización de un subcontrato según los términos de este Contrato.

6.- Restricciones.- El Contratista podrá restringir el derecho del Contratante de hacer uso de cualquier pliego de una propuesta de cambios presentada por el Contratista de acuerdo con las disposiciones de este artículo, o de la información que le sirve de soporte, si aparece claramente marcada o impresa sobre dicho pliego u hoja de información, la siguiente constancia:

...."Estos datos suministrados de conformidad con el Artículo sobre Cambios Propuestos por el Contratista del Contrato No. _____, no serán dados a conocer a nadie fuera del Contratante ni copiados ni usados ni revelados, total o parcialmente, con ningún otro propósito que el de evaluar la propuesta sometida ante el Contratante al amparo del artículo antedicho. Esta restricción no pretende limitar el derecho del Contratante de usar información contenida en esos documentos, si es o ha sido obtenida del Contratista o de otra manera puesta a su disposición por éste y obtenida de otra fuente, sin limitaciones. Si dicha propuesta es aceptada por el Contratante de acuerdo a los términos del antedicho Contrato, después de haber hecho uso de esta documentación en la mencionada evaluación, el Contratante tendrá el derecho a reproducir, copiar, usar y revelar cualquier parte de la documentación que sea razonablemente necesaria para la plena utilización de la propuesta, tal como ha sido aceptada, de cualquier manera y con el propósito que fuere, y ordenar que otros lo hagan".

En el caso de que una propuesta de esta naturaleza sea aceptada, queda aquí entendido que el Contratista cede al Contratante todos los derechos para usar, reproducir, copiar o revelar, en su totalidad o en parte, de cualquier manera y con el propósito que fuere, y ordenar o permitir que otros lo hagan, cualquier documento que sea razonablemente necesario para utilizar plenamente dicha propuesta.

7.- Modificaciones a la Propuesta.- Cualquier modificación de una propuesta para rebajar costos, por medio de la cual sean aumentadas o disminuidas las cantidades de obra posteriormente a su aceptación y formalización por parte del Contratante, deberá estar condicionada a un ajuste equitativo en el costo, de conformidad con lo estipulado en la Cláusula (4) de este artículo.

8.- Aclaración de Términos.- Para los fines de este artículo, se entenderá como **desarrollo** de una propuesta de cambios para reducción de costos, a las investigaciones, estudios de campo y oficina, cálculos, rediseño y preparación de planos, modificaciones a las especificaciones técnicas y a las condiciones contractuales originales, para su presentación al Contratante con fines de evaluación y aceptación o rechazo.

Por **ejecución** o **puesta en obra** se entenderá la construcción de las obras de conformidad con la propuesta, si ésta es aceptada y formalizada por el Contratante.

2.1.2.5. Sección 105.09: Derecho a Usar Materiales Encontrados Dentro de los Límites del Proyecto

El Contratista, con la aprobación del Ingeniero, podrá usar en la construcción de las obras del Proyecto, materiales como piedra, grava, arena u otro material que, a juicio del Ingeniero y sin afectar negativamente al Medio Ambiente, sea aceptable para ello y que sea encontrado en la excavación, y recibirá pago por la excavación de dichos materiales al precio unitario contractual correspondiente sin que se le haga ninguna deducción del precio unitario de otras obras en las cuales sean incorporados. Por su parte, El Contratista quedará obligado a reemplazar, a sus expensas, con otro material aceptable, todo el volumen de materiales así removido y usado que luego hiciere falta para la construcción de terraplenes, rellenos de estructuras, accesos a puentes y propiedades y otros tipos de obras. No se cobrará nada al Contratista por los materiales así usados.

El Contratista, sin embargo, no deberá excavar ni remover ningún material existente dentro del emplazamiento de la vía que no esté dentro de los límites de excavación y terraplenado indicados por las estacas de talud, sin la autorización u orden escrita del Ingeniero.

En el caso de que el Contratista haya producido o procesado materiales existentes en tierras del Contratante, en exceso de las cantidades requeridas para la construcción de las obras, el Contratante podrá tomar posesión de tales excedentes, incluyendo todo material de desperdicio resultante como subproducto, sin la obligación de reembolsar al Contratista el costo de su producción, o podrá ordenar al Contratista la remoción de dichos materiales y restaurar los lugares de almacenaje a una condición satisfactoria, sin costo adicional para el Contratante.

La anterior disposición no será aplicable a los casos en que el Contratante convenga con el Contratista en la producción o procesamiento de materiales en volúmenes que excedan a las necesidades del Proyecto, mediante pago acordado entre ambos, sea para las necesidades futuras del mantenimiento, para trabajos extras o para otros trabajos del Contratante.

Salvo disposición en contrario, todo el material proveniente de una estructura abandonada, podrá ser usado temporalmente por el Contratista en la erección de la estructura que la reemplazará o en cualquier otra del Proyecto. El Contratista no podrá modificar dicho material sin la previa autorización del Ingeniero.

2.1.2.6. Sección 105.10: Derechos sobre Materiales de Valor Cultural o de Carácter Bélico

Cuando dentro de los límites del Proyecto o en operaciones con él relacionadas sean encontrados objetos de arte o de valor histórico o materiales de guerra, el Contratista deberá notificar inmediatamente al Ingeniero y solicitar instrucciones acerca de la línea de acción a seguir.

Cuando las operaciones de excavación a cargo del Contratista ponga al descubierto fósiles, vestigios de poblados prehistóricos o de artefactos de valor histórico o arqueológico, o de objetos explosivos, todas las operaciones en el área circundante serán temporalmente suspendidas y el Ingeniero notificará al Contratante para que éste ponga el hallazgo en conocimiento de las autoridades competentes, según el caso, para que ellas dispongan lo que haya que hacer con los objetos descubiertos y con el área del hallazgo. Bajo la inmediata dirección del Ingeniero, el Contratista proseguirá con las excavaciones en el sitio de tal manera que no resulten dañados los artículos encontrados o cualquier otro que pudiera existir oculto y para removerlos y entregarlos a la custodia de las autoridades competentes. Cuando sea necesario ejecutar este tipo de excavaciones, el pago será efectuado como **Trabajo Extra.**

Todo artefacto y objeto así encontrados y recuperados serán de la exclusiva propiedad y posesión del Gobierno Central. La apropiación de tales objetos que hiciera el Contratista o su personal, será considerada como una acción ilegal.

El Contratista es responsable de notificar a sus empleados y subcontratistas, de estas disposiciones y de este derecho de posesión del Gobierno Central.

2.1.2.7. Sección 105.11: Limpieza Final del Lugar de la Obra

De conformidad con el avance de los trabajos, y antes de la aceptación final del Proyecto, el Contratista deberá despejar paso a paso el sitio de la obra y restaurarlo a su situación original, incluyendo aquellos terrenos de propiedad pública o privada que hayan sido usados como **bancos de préstamo** o en cualquiera otra forma para la construcción de las obras. Para ello removerá los materiales sobrantes y las instalaciones provisionales y limpiará las cunetas, zanjas o cauces que hayan quedado obstruidos durante la ejecución de los trabajos, además **cumplirá con los requerimientos de las NABCV.**

El Contratista podrá solicitar una autorización temporal para guardar equipo y materiales en alguna área despejada del Derecho de Vía del Proyecto, hasta que éste último sea aceptado. Antes de la aceptación final del Proyecto todo equipo, material y otras propiedades del Contratista deberán ser removidos de esas áreas.

Todos aquellos pilotes que ya no sean necesarios en la obra, deberán ser recortados, por lo menos, sesenta centímetros (0.60 m.) por debajo de la superficie del terreno o al ras con el fondo del canal, si está situado en alguna vía de agua. Todos los recortes de pilotes y residuos deberán ser removidos del Derecho de Vía del Proyecto y desechados en sitios indicados por el Ingeniero y en la forma que él apruebe.

Si el Contratista no cumpliera con alguna de las disposiciones de este Artículo, el Ingeniero le notificará por escrito su incumplimiento. Treinta días (30) después de la entrega de esta notificación, el Contratante hará remover todo equipo, material u otro objeto que pertenezca al Contratista y que se encuentre dentro de los límites del Proyecto. Esta remoción será hecha a expensas del Contratista, quien será, además responsable de cualquier consecuencia que tuviera tal remoción. Esta acción no impedirá al Contratante tomar otras medidas o aplicar otras sanciones contra el Contratista, según esté previsto en las CEC.

Todo el trabajo de limpieza final será considerado como necesario y auxiliar de la ejecución de las obras bajo contrato y no recibirá compensación adicional.

2.1.3. SECCIÓN 106: CONTROL DEL TRABAJO

2.1.3.1. Sección 106.01: Autoridad del Ingeniero

El Ingeniero decidirá acerca de todos los aspectos que puedan presentarse respecto a la calidad y aceptabilidad de los materiales entregados, al trabajo ejecutado el ritmo de avance de la obra; la interpretación de los planos y especificaciones y las relativas al cumplimiento del Contrato por parte del Contratista.

La decisión del Ingeniero se fundará en un criterio técnico, tomando en consideración todos los hechos, las variaciones inherentes al procesado y ensaye de los materiales para obras viales, disponibilidad financiera, experiencias obtenidas en el pasado, resultados de investigaciones y otros factores que tengan que ver con el aspecto examinado, incluyendo todos los reglamentos, instrucciones y normas establecidas por el Contratante para la administración de obras bajo contrato. Deberán hacerse todas las pruebas o ensayes que el Ingeniero juzgue necesarios basados en los planos y las especificaciones correspondientes, para determinar el grado de concordancia del material o el trabajo en cuestión.

2.1.3.2. Sección 106.03: Conformidad con los Planos y Especificaciones

Todo trabajo efectuado y todos los materiales suministrados deberán estar sustancialmente de conformidad con las alineaciones, rasantes, secciones transversales y requisitos sobre dimensiones y materiales que aparezcan en los planos o se indiquen en las especificaciones.

Las dimensiones mostradas en los planos y los valores requeridos por las especificaciones contractuales deberán ser considerados como dimensiones que se tratará de alcanzar y valores con que habrá que cumplir como **valores de diseño**, para los cuales hay ciertas tolerancias permitidas. La intención de las especificaciones es que los materiales y la ejecución sean de carácter uniforme y que se ajusten, lo más realísticamente posible, a las dimensiones y valores de los planos y especificaciones o a la parte media de los rangos de tolerancia, si estuvieran indicados. El propósito de los rangos de tolerancia es el de considerar aquellas desviaciones menores ocasionales con respecto a la zona media, que resultan inevitables por razones prácticas. Cuando se especifican valores máximos o mínimos o ambos, la producción y proceso del material y la ejecución del trabajo, deberán ser controlados por el Contratista, de tal manera que los materiales y la obra estén dentro de los límites extremos permitidos para dimensiones o calidad, pero no preponderantemente cerca de ellos. (Ver Artículo 106.12).

En caso de que el Ingeniero encuentre que los materiales suministrados, el trabajo realizado o el producto acabado, no estén sustancialmente conforme con los planos y las especificaciones, tal obra o materiales deberán ser removidos y reemplazados o corregidos de cualquiera otra manera por el Contratista, a sus expensas, de conformidad con el Artículo 106.12 de estas CGC.

2.1.3.3. Sección 106.08: Replanteo y Medición de la Obra

El Contratista deberá replantear la vía y sus estructuras y colocar todas las estacas de construcción, con base en los planos, referencias y los puntos de control primario tanto horizontal (PC, PI, POT y PT) como bancos de nivel para control vertical autorizados previamente por el Ingeniero en el terreno. Con base en las marcas de control primario autorizadas por el Ingeniero, el Contratista establecerá en el terreno el eje de la vía,

demarcará el Derecho de Vía, colocará las estacas de talud, los ejes de puentes, cajas, alcantarillas y sus obras accesorias, así como los niveles y rasantes necesarios para construir las obras de acuerdo con el Contrato.

El Contratista será responsable de la preservación de todos los puntos de control primario establecidos por el Ingeniero, y de todas las estacas de construcción colocadas por él mismo. Si cualquiera de ellos fuera destruido o alterado por el Contratista u otras personas o instituciones, el costo de su reposición será por cuenta del Contratista y su valor cobrado o deducido de los pagos que hubiera que hacerle por trabajo efectuado, según lo determine el Ingeniero.

El Contratista será responsable por los daños y perjuicios resultantes de cualquier falta de exactitud en sus replanteos. El Ingeniero podrá, si lo estima conveniente, comprobar la exactitud de tales replanteos; sin embargo, una falta de comprobación por parte del Ingeniero no relevará al Contratista de su responsabilidad. El Contratista suministrará al Ingeniero sin costo alguno, con todo esmero y prontitud, toda la ayuda y materiales que fueren requeridos para la comprobación del replanteo.

El Contratista deberá poner en conocimiento del Ingeniero los errores aparentes que fueren descubiertos en el replanteo básico inicial, antes de comenzar el trabajo afectado. En caso de ejecutar el trabajo de acuerdo con un replanteo inicial errado, el valor de tal trabajo y cualquier corrección ordenada del mismo, será asumido por el Contratista, a menos que dicho trabajo difiera sustancialmente del descrito en los planos o en las especificaciones, en cuyo caso se aplicarán las disposiciones del Artículo-110.05 o Artículo-110.06 de estas CGC.

El Contratista avisará por escrito al Ingeniero, con no menos de 48 horas de anticipación, cada vez que vaya a comenzar a trabajar en partes de la obra que requieran la medición de secciones transversales originales para fines de pago; de no mediar este aviso, el Contratista no recibirá pago alguno por los trabajos que hayan sido iniciados sin la previa autorización y medición del Ingeniero.

El Ingeniero efectuará, las mediciones que crea convenientes para determinar las cantidades de obra realizadas y, con base en ellas, autorizar los pagos parciales o el pago final. Las mediciones original y final realizadas para el pago final, será hechas conjuntamente por el Ingeniero y el Contratista, a menos que éste rehusara o no pudiera hacerlo al ser notificado; con tal objeto se procederá a conformar una brigada integrada con personal de ambos, que llevará sus anotaciones en libretas de campo que permitan entregar al Contratista copias al carbón de cada hoja, rubricada por los representantes del Ingeniero y del Contratista. Dichas libretas serán suministradas por el Contratista sin costo adicional para el Contratante.

En caso de que el Contratista rehusara o no pudiera integrar la brigada conjunta o suministrar las libretas requeridas en su oportunidad, las mediciones efectuadas por el Ingeniero serán finales y las únicas que se tomarán en cuenta para el pago.

2.1.3.4. Sección 106.10: Autoridad y Obligaciones de los Inspectores

Los inspectores de obras tendrán las siguientes obligaciones:

- Mantener informado al Ingeniero sobre el avance de las obras y la manera en que están siendo ejecutadas.

- Informar al Ingeniero cada vez que los materiales suministrados o el trabajo efectuado por el Contratista no llenen los requisitos de los documentos constitutivos del Contrato, Artículo 106.04 de esta CGC.

- Hacer del conocimiento del Ingeniero acerca de cualquier desviación o incumplimiento con los planos y especificaciones, equipos, mano de obra, etc., por parte del Contratista.

- Con la autorización del Ingeniero llevar a cabo ensayes analíticos en todas las obras y materiales e informarle los resultados al Ingeniero.

Además los inspectores estarán autorizados para inspeccionar toda o cualquier parte de la obra hecha y materiales suministrados y para ejercer aquella autoridad adicional que el Ingeniero les delegue por escrito ante el Contratistas. Estarán autorizados para rechazar materiales inadecuados y para suspender cualquier trabajo que esté siendo llevado a efecto en forma defectuosa, sujetos a la decisión final del Ingeniero.

La inspección no relevará al Contratista de ninguna de las obligaciones de suministrar materiales aceptables o de ejecutar el trabajo estrictamente de acuerdo con los requerimientos de los planos, especificaciones y del Contrato.

Los inspectores no estarán autorizados para revocar, alterar, aumentar, hacer menos estricto u obviar ningún requerimiento de las especificaciones ni para aprobar o aceptar parte alguna de la obra ni para girar instrucciones contrarias a los planos y especificaciones.

Los inspectores, en ningún caso, actuarán como capataces ni efectuarán tareas para el Contratista, ni interferirán con la administración del trabajo por parte de éste. Ningún consejo u opinión que los inspectores pudieran dar al Contratista podrá ser tomado, de manera alguna, como compromisorio para el Ingeniero o el Contratante o como relevando al Contratista de la obligación de cumplir con los términos del Contrato.

2.1.3.5. Sección 106.11: Inspección del Trabajo

A.- Generalidades.

1.- Exceptuando cualquier otra disposición específica en el Contrato, todo material o trabajo requerido para las obras en él comprendida, estará sujeto a la inspección y prueba por parte del Ingeniero, con frecuencia razonable y en el sitio del trabajo, a menos que el Contratante hubiera determinado que tal inspección o prueba del material que va a ser incorporado en el trabajo pueda ser hecha en el lugar de producción, manufactura o embarque. El Ingeniero determinará, cada vez que se decida permitir inspecciones o pruebas fuera del sitio, hasta qué grado tales inspecciones son decisivas acerca de si los materiales en cuestión llenan los requisitos del Contrato. Tales inspecciones y pruebas fuera del sitio del trabajo, no relevarán al Contratista de la responsabilidad por daños o pérdidas del material antes de la aceptación final de la obra, ni en forma alguna afectarán a la continuidad de los derechos ininterrumpidos del Contratante después de la aceptación del trabajo, de acuerdo con los términos del Artículo 106.17, Cláusula 2, con excepción de los previstos anteriormente en estas CGC.

2.- El Contratista deberá reemplazar, sin costo adicional para el Contratante, toda obra mal ejecutada o que, según lo determine el Ingeniero, no cumple con los requisitos fijados en este Contrato, a menos que, en interés del público, el Contratante aceptara tal material o tal obra mal ejecutada con un ajuste adecuado en el precio del Contrato.

3.- El Contratista deberá, con la mayor brevedad, separar y remover del área de la obra todo material que haya sido rechazado. Si el Contratista no reemplazará prontamente el material rechazado o no corrigiere la obra mal ejecutada, el Contratante podrá:

3.1) Reemplazar tal material o corregir la obra defectuosa, por Contrato o bajo cualquier otro procedimiento, cargando el costo de ello al Contratista; o

3.2) Cancelar el derecho del Contratista a continuar la construcción de la obra de acuerdo con el Artículo-109.08, de estas CGC.

4.- El Contratista deberá suministrar, prontamente y sin costo adicional para el Contratante, todas las facilidades, personal y material razonablemente necesarios para efectuar las inspecciones y pruebas que el Ingeniero considere seguras o convenientes. Toda inspección y prueba será efectuada en forma que no atrase el trabajo innecesariamente. El Contratista pagará todo el costo adicional ocasionado por la inspección, si el material o la obra ejecutada no están listos en la fecha u hora especificada por el Contratista para su inspección y prueba.

5.- Si el Contratante considerase necesario o recomendable en cualquier oportunidad, antes de la aceptación de toda la obra, hacer un examen de trabajos ya terminados por medio de remoción o destrucción parcial de los mismos, el Contratista, a solicitud del Ingeniero, deberá suministrar prontamente todas las facilidades, personal y materiales necesarios para ello. Si se encuentra que tales trabajos son defectuosos o no se ajustan a las normas de calidad prescritas en el Contrato, por falta del Contratista o de sus subcontratistas, serán por cuenta del Contratistas los gastos de tal examen y de su reconstrucción satisfactoria.

Pero, si se encuentra que dichos trabajos llenan los requisitos del Contrato, se compensará al Contratista por el costo de los servicios adicionales requeridos para el examen mencionado, así como para la adecuada reconstrucción, y si por tal motivo se atrasare la terminación del trabajo total, el Contratante le reconocerá una extensión justa en el plazo del Contrato.

En casos de obras públicas, si algún Ministerio, Ente Autónomo, Municipalidad o Entidad a cargo de servicios públicos, va a pagar parte del costo de las obras amparadas por este Contrato, o, simplemente, tiene responsabilidades involucradas en ellas, dicha entidad tendrá el derecho de inspeccionar los trabajos y de velar porque las obras o su ejecución, sean llevadas a cabo sin daños ni menoscabo a las obras o instalaciones a su cargo. Tal inspección no convertirá en forma alguna, a dicha dependencia gubernamental, Ente Autónomo, Municipalidad o Entidad a cargo de servicios públicos, en parte del Contrato ni le dará derecho para interferir con los derechos de alguna de las partes signatarias del mismo. En casos de salvaguardar los intereses del público (protección de cables telefónicos, líneas de transmisión, cañerías de agua potable, etc.), las CEC determinarán el alcance de la autoridad e inspección que ejercerían estas entidades ajenas al Contrato.

B.- Control de Calidad.

Existen cuatro métodos para determinar la conformidad de las obras con los planos y especificaciones y su aceptabilidad. El método de aceptación es especificado en cada Sección de las Especificaciones Técnicas. Sin embargo, la obra podrá ser rechazada en cualquier oportunidad en que se encuentre, por cualquiera de dichos métodos, que no cumple con el Contrato.

Estos métodos son los siguientes:

I. Inspección Visual. En éste, la aceptación se basa en la inspección visual del trabajo en cuanto al cumplimiento con el Contrato y las normas de la industria.

II. Certificación. Para materiales fabricados fuera del Proyecto, se usa un Fabricante que cuente con una certificación ISO 9000 o un sistema efectivo de ensayes y de inspección. Se requerirá que el Fabricante marque claramente el material o su empaque con una identificación única del producto o de la especificación estándar bajo la cual es producido.

El material aceptado por medio de certificación podrá ser muestreado y ensayado en cualquier momento. Si se encuentra que no está conforme con el Contrato, el material será rechazado sea que esté colocado en la obra o no.

Se podrá exigir cualquiera de los certificados siguientes:

(a) Certificado de Producción.- El material que requiera un certificado de producción es identificado en el artículo de aceptación de cada sección. Se requerirá que el Fabricante suministre un certificado de producción por cada embarque de material. Con cada certificado de producción, se deberá incluir lo siguiente:

(1) Fecha y lugar de fabricación.

(2) Los resultados de ensaye del material del mismo lote y la documentación sobre el sistema de inspección y ensaye.

(3) Número del lote u otros medios de referenciación cruzada del sistema de inspección y ensaye del Fabricante.

(4) Declaración del Fabricante afirmando que el material cumple con todos lo requerido en el Contrato.

(5) Firma del Fabricante u otro medio de demostración de la responsabilidad del certificado.

(6) Firma de aceptación del material por parte del Contratista.

(b) Certificación Comercial.- Cuando se necesite certificación, pero no un certificado de producción, se deberá suministrar un certificado comercial para todo material similar del mismo Fabricante. Un Certificado Comercial es una indicación del Fabricante o Contratista asegurando que el material cumple con todas las exigencias del Contrato. Esa indicación puede ser por medio de marbetes, datos de catálogo, especificaciones estándar estampadas o certificaciones autenticadas del suplidor que indiquen que el material es producido de acuerdo con ciertos estándares comerciales o especificaciones.

III. Conformidad por medio de Mediciones o Ensayes.- Provéase toda la producción y procesamientos necesarios del trabajo y la ejecución de los controles, de manera que todas las obras cumplan con los requerimientos del Contrato.

Los resultados de la inspección o de los ensayes deberán tener valores que queden dentro de las tolerancias especificadas o los límites de las especificaciones. Cuando no estén identificados en el Contrato los valores de las tolerancias, el trabajo será aceptado con base en las tolerancias acostumbradas en la fabricación y la construcción.

IV Evaluación Estadística del Trabajo y Determinación del Factor de Pago (Valor del Trabajo).- La evaluación estadística del trabajo es un método de análisis de los resultados de la inspección o de los ensayes para determinar su conformidad con los requerimientos del Contrato, que será aplicable únicamente cuando así lo establezcan los acuerdos o convenios de financiamiento con organismos internacionales. El trabajo será aceptado de acuerdo con lo siguiente:

(a) Generalidades.- Para trabajo evaluado con base estadística, tanto el Contratante como el Contratista asumen algún riesgo.

El riesgo del Contratante es la probabilidad de que sea aceptado trabajo con nivel de calidad rechazable. El riesgo del Contratista es la probabilidad de que trabajo producido con un nivel de calidad aceptable (NCA) sea rechazado o aceptado a un precio contractual reducido.

El nivel de calidad aceptable es el porcentaje más alto de trabajo fuera de los límites especificados que es considerado aceptable para ser pagado al precio del Contrato. Hay 2 categorías. La categoría I está basada en un NCA de 5%. La categoría II está basada en un NCA del 10 por ciento. En ambos casos, el riesgo del Contratista es del 5 por ciento.

Como un incentivo para producir un trabajo de calidad uniforme y disminuir el riesgo del Contratista, es posible obtener un pago final mayor que el del precio contractual, bajo ciertas condiciones.

(1) Características de Calidad.- Las características de calidad a ser evaluadas aparecen listadas en el artículo de Aceptación de cada sección de las Especificaciones Técnicas.

(2) Tamaño del Lote.- Un lote es una cantidad discreta de trabajo a la cual se aplican los procedimientos de evaluación estadística. Un lote normalmente representa la cantidad total de trabajo producido. Puede ocurrir más de un lote si se piden por escrito y se aprueban, cambios en los valores meta, fuentes de materiales o en las fórmulas de control de la mezcla de trabajo, o se exigen ajustes de acuerdo con lo estipulado en el inciso (b) más adelante.

(3) Frecuencia del Muestreo.- La frecuencia del muestreo aparece listada en el artículo de Aceptación de cada sección de las Especificaciones. La tasa de la frecuencia mostrada normalmente resulta en un mínimo de 5 muestras, que es el mínimo número requerido para realizar una evaluación estadística. El máximo factor de pago obtenible con 5 muestras es 1.01. Para obtener un factor de pago de 1.05 se requiere un mínimo de 8 muestras.

Si las frecuencias de muestreo y la cantidad del trabajo resultaran de otra manera en menos de 8 muestras, será necesaria una solicitud por escrito para aumentar la frecuencia del muestreo a fin de proveer un mínimo de 8 muestras. Esta solicitud del Contratista deberá ser entregada, por lo menos 48 horas antes de empezar la producción. Un aumento en la frecuencia del muestreo podría resultar en una reducción del factor de pago.

(4) Lugares de Muestreo.- Los lugares de muestreo aparecen listados en el artículo de Aceptación de cada sección. El lugar exacto del muestreo será modificado por el Ingeniero con base en números al azar.

(5) Métodos de Ensaye.- Los métodos de ensaye usados para probar la muestra aparecen listados en el artículo de Aceptación de cada sección.

(6) Límites de las Especificaciones.- Los límites de las especificaciones para las características de calidad son listados en las especificaciones para el trabajo en cuestión.

(7) Categoría.- La categoría para las características de calidad a ser analizadas aparecen mostradas en el artículo de Aceptación de cada sección.

(b) Aceptación.- El trabajo en el lote será pagado de acuerdo con el factor final de pago, una vez que se han completado y evaluado todos los resultados de la inspección o de los ensayes.

Antes de determinar el factor final de pago, el trabajo podrá ser incorporado en el Proyecto siempre que el factor de pago corriente (no ajustado) no sea menor de 0.90. Si un lote es concluido con menos de 5 muestras, el material será evaluado según lo establecido en la cláusula B (III) de este artículo.

Si el factor de pago corriente de un lote es menor de 0.90, se deberá suspender la producción. Esta podrá reanudarse después de que el Contratista haya tomado medidas efectivas y aceptables para mejorar la calidad de la producción. Si se determina que la reanudación de la producción exige un cambio significativo en el proceso de la producción, se dará por terminado el lote corriente y se iniciará un nuevo lote. Un lote que contenga un porcentaje no satisfactorio de material fuera de la especificación (factor de pago menor de 1.00), será aceptable siempre que el menor factor de pago simple no haya caído en la porción de rechazo del Cuadro 106-2.

CUADRO 106-2

Factores de Pago

Factor de Pago		Máximo Porcentaje Permisible de Obra Fuera de los Límites de la Especificación para un Factor de Pago Dado ($P_A + P_B$)											
Categoría		n = 5	n = 6	n = 7	n = 8	n = 9	n = 10 a n = 11	n = 12 a n = 14	n = 15 a n = 17	n = 18 a n = 22	n = 23 a n = 29	n = 30 a n = 42	n = 43 a n = 66	n = 67 a infinito
I	II													
1.05					0	0	0	0	0	0	0	0	0	0
1.04				0	1	3	5	4	4	4	3	3	3	3
1.03			0	2	4	6	8	7	7	6	5	5	4	4
1.02			1	3	6	9	11	10	9	8	7	7	6	6
1.01		0	2	5	8	11	13	12	11	10	9	8	8	7
1.00		22	20	18	17	16	15	14	13	12	11	10	9	8
0.99		24	22	20	19	18	17	16	15	14	13	11	10	9
0.98		26	24	22	21	20	19	18	16	15	14	13	12	10
0.97		28	26	24	23	22	21	19	18	17	16	14	13	12
0.96		30	28	26	25	24	22	21	19	18	17	16	14	13
0.95	1.00	32	29	28	26	25	24	22	21	20	18	17	16	14
0.94	0.99	33	31	29	28	27	25	24	22	21	20	18	17	15
0.93	0.98	35	33	31	29	28	27	25	24	22	21	20	18	16
0.92	0.97	37	34	32	31	30	28	27	25	24	22	21	19	18
0.91	0.96	38	36	34	32	31	30	28	26	25	24	22	21	19
0.90	0.95	39	37	35	34	33	31	29	28	26	25	23	22	20
0.89	0.94	41	38	37	35	34	32	31	29	28	26	25	23	21
0.88	0.93	42	40	38	36	35	34	32	30	29	27	26	24	22
0.87	0.92	43	41	39	38	37	35	33	32	30	29	27	25	23
0.86	0.91	45	42	41	39	38	36	34	33	31	30	28	26	24

Nota : Para obtener un factor de pago cuando el valor de (P_A y/o P_B) del Cuadro 106-2 no corresponde a un valor de ($P_A + P_B$) de este Cuadro, úsese el valor cercano más alto de ($P_A + P_B$)

CUADRO 106-2 (Continuación)

Factores de Pago

Factor de Pago		Máximo Porcentaje Permisible de Obra Fuera de los Límites de la Especificación para un Factor de Pago Dado ($P_A + P_B$)												
Categoria		n = 5	n = 6	n = 7	n = 8	n = 9	n = 10 a n = 11	n = 12 a n = 14	n = 15 a n = 17	n = 18 a n = 22	n = 23 a n = 29	n = 30 a n = 42	n = 43 a n = 66	n = 67 a infinito
I	II													
0.85	0.90	46	44	42	40	39	38	36	34	33	31	29	28	25
0.84	0.89	47	45	43	42	40	39	37	35	34	32	30	29	27
0.83	0.88	49	46	44	43	42	40	38	36	35	33	31	30	28
0.82	0.87	50	47	46	44	43	41	39	38	36	34	33	31	29
0.81	0.86	51	49	47	45	44	42	41	39	37	36	34	32	30
0.80	0.85	52	50	48	46	45	44	42	40	38	37	35	33	31
0.79	0.84	54	51	49	48	46	45	43	41	39	38	36	34	32
0.78	0.83	55	52	50	49	48	46	44	42	41	39	37	35	33
0.77	0.82	56	54	52	50	49	47	45	43	42	40	38	36	34
0.76	0.81	57	55	53	51	50	48	46	44	43	41	39	37	35
0.75	0.80	58	56	54	52	51	49	47	46	44	42	40	38	36
RECHAZO	0.79	60	57	55	53	52	51	48	47	45	43	41	40	37
	0.78	61	58	56	55	53	52	50	48	46	44	43	41	38
	0.77	62	59	57	56	54	53	51	49	47	45	44	42	39
	0.76	63	61	58	57	55	54	52	50	48	47	45	43	40
	0.75	64	62	60	58	57	55	53	51	49	48	46	44	41
	Rechazo	Valores mayores que los mostrados arriba												

Nota : Para obtener un factor de pago cuando el valor de (P_A y/o P_B) del Cuadro 106-2 no corresponde a un valor de ($P_A + P_B$) de este Cuadro, úsese el valor cercano más alto de ($P_A + P_B$)

Un lote que contenga un porcentaje no satisfactorio de material fuera de la especificación, con un factor de pago simple mínimo que caiga en la porción de rechazo del Cuadro 106.2, será rechazado. El material rechazado deberá ser removido de la obra.

Cuando lo apruebe el Ingeniero, será permisible remover voluntariamente el material defectuoso y reemplazado con material nuevo, a fin de evitar o minimizar un factor de pago menor de 1.00. El nuevo material será muestreado, ensayado y evaluado de acuerdo con lo establecido en esta Cláusula (IV).

Cualquier cantidad de material que esté defectuosa, podrá ser rechazado mediante inspección visual o según los resultados de ensayes. No se deberá incorporar en la obra material rechazado. Los resultados de ensayes realizados en material rechazado serán excluidos del lote.

(c) Evaluación Estadística.- Se usará el Método de Variabilidad / Desviación Estándar Desconocida para determinar el porcentaje estimado del lote que está fuera de los límites de las especificaciones.

El número de cifras significativas usado en los cálculos será de conformidad con la norma AASHTO R11, método absoluto.

El porcentaje estimado de trabajo que está fuera de los límites de las especificaciones para cada característica de calidad será determinado en la forma siguiente:

(1) Calcular la media aritmética (χ) de los valores de los ensayes:

$$\chi = \Sigma x/n$$

Donde:

Σ= Sumatoria de valores individuales de los ensayes

x = Valor individual del ensaye

n = número total de los valores de los ensayes

(2) Calcular la desviación estándar (S):

$$S = [n(\Sigma x_2) - (\Sigma x)_2]/n(n-1)$$

Donde:

(Σx_2) = Sumatoria de los cuadrados de los valores individuales de los ensayes.

$(\Sigma x)_2$ = Cuadrado de la sumatoria de los valores individuales de los ensayes.

(3) Calcular el índice de calidad más alto

$$(Q_A) : Q_A = (LAS - \chi)\ S$$

Donde:

LAS = límite superior (o último) de la especificación.

NOTA: El **LAS** es igual al límite contractual de la especificación o valor meta más la desviación permisible.

(4) Calcular el índice de calidad más bajo.

$$(Q_B): Q_B = (\chi - LBS)/\ S$$

Donde:

LBS = Límite más bajo de la especificación.

NOTA: El LBS es igual al límite contractual de la especificación o valor meta menos la desviación permisible.

(5) En el Cuadro 106-2 determinar P_A (Porcentaje estimado de la obra que está fuera del LAS). P_A corresponde a un Q_A dado. Si no está especificado un LAS, P_A es 0.

(6) En el Cuadro 106-2, determinar P_B (el porcentaje estimado de la obra incluida en el lote, que está fuera del LBS).

P_B corresponde a un Q_B dado. Si no está especificado un LBS, P_L es 0.

(7) Calcular el porcentaje estimado total de obra que está fuera del LAS y del LBS (porcentaje deficitario): $P_A + P_B$.

(8) Repítanse del (1) al (7) para cada característica de calidad listada para ser evaluada estadísticamente.

d) Determinación del Factor de Pago (Valor de la Obra). El factor de pago para un lote será determinado como sigue:

(1) En el Cuadro 106-2, determinar el factor de pago para cada característica de calidad usando el número total de valores de los ensayes y el porcentaje estimado total que está fuera de los límites de la especificación obtenido mediante el paso (c) (7).

(2) Cuando todas las características de calidad de un lote son de Categoría I, el factor de pago del lote estará basado en el factor de pago simple más bajo de todos para cualquier característica de calidad de Categoría I. El máximo factor de pago obtenible es 1.05 (con un mínimo de 8 valores de ensayes).

(3) Cuando las características de calidad para un lote son de ambas categorías, I y II, el factor de pago del lote será basado en lo siguiente:

(a) Cuando todas las características de calidad de Categoría II son de 1.00, el pago del lote se basará en el factor de pago simple más bajo de todas las características de calidad de categoría I. El máximo factor de pago obtenible es 1.05 (con un máximo de 8 valores de los ensayes).

(b) Cuando cualquier característica de calidad de Categoría II, es menor de 1.00, el pago del lote se basará en el factor de pago simple más bajo para cualquier característica de calidad.

(4) Cuando todas las características de calidad de un lote son de Categoría II, el factor de pago del lote se basará en el factor de pago simple más bajo de todos los de cualquier característica de calidad de Categoría II. El máximo factor de pago obtenible será de 1.00.

(5) El ajuste en el pago para material en un lote será hecho a un precio determinado multiplicando el precio unitario contractual de la oferta por el factor de pago del lote determinado en la forma aquí explicada.

2.1.3.6. Sección 106.12: Remoción de Obras Inaceptables o no Autorizadas

Toda obra que no llene los requerimientos del Contrato será considerada como inaceptable.

Ningún trabajo podrá ser hecho antes de que el Ingeniero haya comprobado las líneas y niveles. Toda obra hecha contra las instrucciones del Ingeniero o construida fuera de las líneas mostradas en los planos o marcadas por las estacas de construcción, o cualquier obra extra hecha sin previa autorización escrita del Ingeniero, será considerada como **Obra no Autorizada**; además, el Ingeniero podrá ordenar su remoción o reemplazo, a expensas del Contratista.

El Contratista no deberá incurrir en responsabilidades por causa de direcciones verbales dadas por el Contratante, el Ingeniero o su representante autorizado, ni el Contratante estará obligado a pagar por materiales extra o por trabajos realizados, a menos que tales materiales o trabajos hayan sido requeridos del Contratista por medio de una orden escrita del Ingeniero Contratante.

Si el Contratista no cumple, dentro de diez (10) días calendario después del recibo de una orden del Ingeniero expedida bajo las disposiciones de este Artículo, el Ingeniero tendrá la autoridad de emplear otros medios para hacer la corrección, reemplazo o remoción de obras inaceptables o no autorizadas. Todos los costos en que incurra el Contratante por la adopción de estas medidas serán deducidos de los pagos pendientes o de cualquier suma que se le llegue a deber al Contratista en el futuro.

2.1.3.7. Sección 106.13: Restricciones sobre las Cargas y Dimensiones de los Vehículos

El Contratista deberá cumplir con todas las leyes que restringen las cargas y dimensiones de vehículos que circulan sobre las vías públicas en relación con el acarreo de materiales o de equipo dentro o fuera de los límites del Proyecto. Un permiso especial no

relevará al Contratista de su responsabilidad por los daños que pudiesen resultar por el traslado de material o equipo.

No será permitida la operación de equipo de tal peso o tan cargado, que pueda dañar las estructuras de la vía o la calzada, o cualquier otro tipo de construcción. El acarreo de materiales sobre la capa de base o sobre la superficie de rodamiento o carpeta de una vía en construcción, será limitado según las instrucciones emitidas. No será permitida la aplicación de cargas sobre un pavimento, base o estructura de concreto, antes de la terminación del período de curado. Los límites de la carga permisible dentro de la obra, no excederán los límites establecidos para las vías adyacentes, a menos que sea permitido por escrito por el Ingeniero. El Contratista será responsable, en todos los casos, de los daños causados por su equipo de acarreo.

El Contratista bajo ninguna circunstancia, puede alegar desconocimiento sobre la Ley de Pesos y Dimensiones, en la cual se indican las cargas y dimensiones legales para circular en las carreteras de Nicaragua. El MTI tiene un sistema de básculas fijas y ambulantes para obligar el cumplimiento de esa ley.

2.1.3.8. Sección 106.14: Mantenimiento de la Obra durante la Construcción

1.- Generalidades.- El Contratista deberá mantener constantemente y por su propia cuenta las partes construidas o instaladas de la obra hasta que el Proyecto sea aceptado finalmente por el Contratante. Este mantenimiento significa la ejecución de trabajo continuo y efectivo, día a día, con suficiente equipo y mano de obra, a fin de mantener la vía y sus estructuras en condiciones de operación satisfactorias.

El trabajo de mantenimiento incluirá, entre otras actividades, las siguientes:

1.1) Mantenimiento de la superficie de la vía en condiciones satisfactorias y utilizables;

1.2) Afinamiento y reconformación de la rasante, taludes, cunetas y capas de base o carpeta cuando y donde sea necesario, a criterio del

Ingeniero;

1.3) Limpiar la basura y escombros de los canales de drenaje, puentes, alcantarillas, tragantes, pozos de visita y otras estructuras de drenaje.

1.4) Remoción de los escombros y basura dejados por las actividades de construcción;

1.5) Reparación o reemplazo de aquellas partes de las obras o instalaciones que hayan sido dañadas;

1.6) Mantenimiento de los desvíos y los abastos de agua para riego;

1.7) Mantenimiento especial;

1.8) Provisión de acceso a residencias, negocios y a otras vías, y manteniendo los senderos de acceso abiertos y transitables;

1.9) Mantenimiento y preservación de la vía y estructuras construidas en su condición de nuevas;

1.10) Eliminación de todo material sobrante o suelto.

En el caso de un Contrato para colocar una o varias capas adicionales de base o de carpeta sobre una superficie previamente construida o existente, el Contratista deberá mantener la superficie existente en condiciones satisfactorias en toda su longitud, dentro de los límites del Proyecto, durante el tiempo que dure la construcción de las obras bajo contrato.

El costo del mantenimiento de la obra, con excepción del Mantenimiento Especial y del Control de Tráfico, deberá ser incluido dentro del costo de los varios conceptos de pago del Contrato, el Contratista, por lo tanto, no recibirá pago adicional por el trabajo a menos que las CEC lo establecieran de otra manera.

El Contratista quedará liberado de toda la responsabilidad de mantenimiento de la obra, tan pronto el Contratante acepte finalmente el total de la obra terminada, según queda estipulado en el Artículo 106.17, Cláusula 3.

2.- Mantenimiento Especial.- El Ingeniero podrá ordenar la ejecución de trabajos de Mantenimiento Especial para beneficio del público o para llevar a cabo reparaciones de daños extensivos resultantes de causas fuera del control del Contratista. El pago del mantenimiento especial será hecho por medio de los varios conceptos de pago del Contrato, o como Trabajo Extra, de acuerdo con las estipulaciones del Artículo-110.06 de estas CGC.

3.- Mantenimiento de Secciones Aceptadas.- Cuando así lo consideren las CEC, el Ingeniero podrá aceptar tramos terminados del Proyecto, de las longitudes especificadas. Si dichos tramos de vías fueran abiertos al tráfico público por orden del Ingeniero, el Contratista tendrá la responsabilidad de mantener tales tramos y será compensado de acuerdo con las

estipulaciones del Artículo-110.06, de estas CGC. La aceptación de estos tramos se ajustará a lo prescrito en el Artículo 106.17 de estas CGC.

4.- Operaciones de Abastecimiento de Combustible y Lubricantes.- No será permitido el abastecimiento de combustible o lubricantes a maquinaria sobre la vía que está en construcción, sea en la superficie de la base que está a punto de recibir aplicaciones asfálticas, en la superficie terminada del pavimento. Cualquier descuido en este particular obligará al Contratista a sustituir la superficie afectada, de acuerdo con las instrucciones del Ingeniero. El costo de dicha sustitución será por cuenta del Contratista. Al efectuar estas operaciones fuera de la vía, el Contratista tomará las precauciones pertinentes para evitar derramar productos de petróleo que contaminen corrientes de agua, superficiales o subterráneas o el suelo.

2.1.3.9. Sección 106.15: Falta de Mantenimiento de la Vía o de las Estructuras

Si el Contratista, en cualquier oportunidad, dejase de cumplir con alguna de las disposiciones del Artículo 106.14, el Ingeniero advertirá inmediatamente al Contratista sobre tal incumplimiento por escrito. Si el Contratista no atendiera a ese mantenimiento dentro de las 24 horas de haber recibido dicho aviso, el Ingeniero podrá proceder a llevar a cabo el mantenimiento del Proyecto y todo el costo de este trabajo será descontado de pagos pendientes o de sumas que se le lleguen a deber o que estén próximos a entregarse al Contratista en virtud de su Contrato.

2.1.3.10. Sección 106.16: Aceptación de la Obra

1.- Aceptación Parcial.

En cualquier oportunidad durante la ejecución del Proyecto que el Contratista complete sustancialmente una unidad o parte importante del Proyecto, tales como una estructura de gran magnitud, un paso a desnivel o una sección de vía o pavimento, no menor de cinco (5) kilómetros, a solicitud del Contratista, se procederá de acuerdo a lo estipulado en las Cláusulas 2, 3, 5, 6 y 7 de este Artículo.

2.- Aceptación Provisional de las Obras.

(a) La aceptación provisional tiene por objeto controlar la conformidad de las obras con el conjunto de obligaciones establecidas en el Contrato, en particular con las condiciones técnicas particulares y los anexos técnicos.

La aceptación podrá efectuarse por etapas, si así lo establecen las CEC, en cuyo caso, la aceptación de la última etapa constituirá la aceptación provisional del Proyecto.

El Contratista notificará, por escrito, simultáneamente al Contratante y al Ingeniero, sobre la fecha en la cual considera que los trabajos fueron o van a estar terminados.

El Ingeniero, luego de haber convocado al Contratista, procederá a efectuar las operaciones previas a la recepción de las obras, dentro de un plazo que, salvo que las CEC establezcan otra cosa, será de cinco (5) días calendario, contados a partir de la fecha en que el Ingeniero recibió la notificación del Contratista antes mencionada, o de la fecha indicada en ella para la terminación de los trabajos, si esta última fecha fuese posterior.

El Contratante, habiendo sido notificado por el Ingeniero sobre la fecha de tales operaciones, podrá asistir a ellas o hacerse representar a tal efecto. En el acta prevista en el inciso (2) de la siguiente Cláusula se mencionará, ya sea la presencia del Contratante o su representante, o de su ausencia, si el Ingeniero confirma que le dio el aviso oportunamente.

Si el Contratista no asiste, se dejará constancia de su ausencia en el acta y se le enviará copia de la misma.

(b) Las operaciones previas a la recepción provisional de las obras comprenderán:

(1) la inspección física de las obras ejecutadas;

(2) la ejecución y registro de las pruebas especificadas en las CEC;

(3) la constatación de posibles omisiones en el cumplimiento de obligaciones con el Contratante, los empleados y suplidores del Contratista, los propietarios de tierras o edificios aledaños al Proyecto, compromisos con comunidades afectadas, etc.,

(4) la constatación de posibles imperfecciones o defectos de construcción;

(5) salvo que las CEC establezcan otra cosa, la constatación del retiro de las instalaciones del lugar de trabajo y de la restauración de los terrenos y lugares a su estado normal;

(6) la constatación de la terminación de los trabajos que estuvieron incompletos.

Los resultados de las operaciones previas se registrarán en un acta redactada en el sitio de las obras por el Ingeniero, la cual será firmada por él mismo y por el Contratista; si este último se negara a firmar, se hará mención de ello en dicha acta.

En el plazo de quince (15) días calendario siguientes a la fecha del acta, el Ingeniero informará al Contratista si ha propuesto o no al Contratante que declare la aceptación provisional de las obras y, en caso afirmativo, la fecha límite fijada para la terminación de los trabajos incompletos que propone no aceptar, así como las reservas que pudiera tener a la fecha de la recepción provisional de las obras.

(c) Teniendo en cuenta el acta de las operaciones previas a la recepción provisional y de las propuestas del Ingeniero, el Contratante decidirá si procede o no efectuar la aceptación provisional, con o sin reservas. Si se procede a aceptar las obras, fijará la fecha que elija para la terminación de los trabajos pendientes. La decisión así tomada le será notificada al Contratista dentro de los cuarenta y cinco (45) días calendario siguientes a la fecha del acta.

Si el Contratante no toma una decisión en el plazo arriba especificado, se considerará que ha aceptado la propuesta del Ingeniero.

Si el Contratante acepta explícitamente, o si se considera que está de acuerdo con la aceptación provisional, dicha aceptación surtirá efecto en la fecha fijada para la terminación de los trabajos incompletos

(d) En caso de que ciertas obligaciones o compromisos a que se refiere el inciso 2(b)(3) de este Artículo, que puedan aún ser objeto de liquidación, no hubieran sido satisfechas, el Contratante podrá proceder a dar la aceptación provisional, a reserva de que el Contratista se comprometa a cumplir con ellos en un plazo no mayor de tres (3) meses. La constatación del cumplimiento del Contratista con dichas obligaciones o compromisos será registrada por el Ingeniero en un acta preparad en la misma forma que el acta sobre las operaciones previas a la aceptación provisional.

(e) Cuando la aceptación provisional esté sujeta a reservas, el Contratista deberá remediar las imperfecciones y defectos de construcción en el plazo que fije el Contratante, o bien, a falta de tal plazo, a más tardar tres (3) meses antes de la fecha prevista para la aceptación final. En caso de que el Contratista no termine tales trabajos en el plazo prescrito, el Contratante podrá hacerlos ejecutar por cuenta y riesgo del Contratista.

(f) Si ciertas obras o parte de obras no están enteramente conformes con las especificaciones del Contrato, sin que las imperfecciones constatadas sean de tal naturaleza que pongan en peligro la seguridad, el funcionamiento o la utilización de las obras, el Contratante, considerando la escasa importancia de las imperfecciones y las dificultades que representaría ponerlas en debida conformidad, podrá renunciar a ordenar la reparación de las obras consideradas defectuosas y proponer al Contratista una reducción de los precios.

Si el Contratista acepta la reducción de los precios, las imperfecciones que la motivaron serán consideradas como inexistentes para los efectos de la aceptación provisional.

En caso contrario, el Contratista estará obligado a reparar dichas imperfecciones y se declarará la aceptación provisional bajo reserva de que se efectúen las reparaciones correspondientes.

(g) Toda toma de posesión de las obras por el Contratante deberá estar precedida por la aceptación de las mismas.

Sin embargo, si hubiera urgencia, la toma de posesión podrá ocurrir antes de la aceptación, bajo reserva de la preparación y firma previas por las partes de un documento en que se haga constar el estado de las obras.

(h) La aceptación provisional implica la transferencia de la propiedad y de los riesgos al Contratante y constituye el punto de partida de la vigencia de la fianza o garantía de calidad la fecha de aceptación provisional del proyecto es la fecha que se usara para cuantificar las multas o premios del proyecto.

(i) Tan pronto como reciba un certificado de aceptación provisional, el Contratista deberá despejar y retirar de la parte del sitio de las obras que han sido aceptadas, todos los equipos, suministros, materiales y excedentes, así como todo desperdicio y obras provisionales de cualquier naturaleza y dejar esta parte del sitio de las obras y trabajos, limpia y en buen estado de funcionamiento. No obstante, queda entendido que el Contratista estará autorizado para mantener en el sitio, hasta el final del período de garantía, todos los equipos, suministros, materiales y obras provisionales que necesitará para cumplir con sus obligaciones durante el período de vigencia de la fianza o garantía de calidad.

3.- Aceptación Final del Proyecto.

(a) La aceptación final tendrá lugar un año después del acta de aceptación provisional, sin perjuicio de lo estipulado en el inciso (b) de esta Cláusula. Durante el período de garantía, el Contratista tendrá las obligaciones contractuales descritas más ampliamente en la Cláusula

6. Por otra parte, a más tardar diez días (10) después de la aceptación provisional, el Ingeniero enviará al Contratista las listas detalladas de defectos de construcción localizados

por él, con excepción de los daños resultantes del uso normal, del uso impropio de las obras o de daños causados por terceros.

El Contratista dispondrá de un plazo de dos (2) meses para efectuar las reparaciones del caso, conforme a las condiciones del Contrato.

El Contratista devolverá al Ingeniero las listas de defectos señalados por éste junto con el detalle de los trabajos efectuados para corregirlos.

El Contratante emitirá, al final de dicho período de dos (2) meses, el acta de aceptación final, luego de haber verificado que las reparaciones fueron correctamente realizadas.

(b) Queda entendido que, si el Contratista no remedia los defectos de construcción dentro de los plazos acordados, la aceptación final será declarada solamente después de la realización completa de tales reparaciones. En caso de que tales trabajos no sean realizados dentro de los dos (2) meses inmediatamente siguientes al término del período de garantía contractual, el Contratante declarará de todos modos, la aceptación final de las obras al término de dicho período. En tal caso, el Contratante hará realizar los trabajos pendientes por empresas de su elección, por cuenta y riesgo del Contratista.

(c) La aceptación final significará el final de la ejecución del Contrato y liberará a las partes contratantes de sus obligaciones.

Ambas partes se extenderán mutuamente finiquito amplio y suficiente, declarando terminadas las obligaciones del Contrato.

4.- Disposición Anticipada de Ciertas Obras o Partes de Obras.

(a) La presente Cláusula se aplicará cuando el Contrato, o una orden escrita del Ingeniero o Contratante, exija que el Contratista ponga a disposición del Contratante, durante un período determinado, ciertas obras o parte de obras aún no terminadas y sin que el Contratante tome posesión definitiva de ellas, con el fin de que pueda ejecutar, o hacer ejecutar por otros contratistas, trabajos distintos de los que son el objeto del Contrato.

(b) Antes de la puesta a disposición de ciertas obras o de partes de obras, se preparará un informe acerca de la situación en que ellas se encuentran, en el cual participarán el Ingeniero y el Contratista.

El Contratista tendrá el derecho a ser preferido para ejecutar tales trabajos no comprendidos en su Contrato, y que interesen a las obras o partes de obras puestas a la disposición del Contratante, si hay acuerdo entre ambos. El Contratista podrá expresar reservas si estima que las características de las obras ejecutadas por él bajo el Contrato no permiten ejecutar estos trabajos accesorios o que tales trabajos podrían deteriorarlas. Estas reservas deberán expresarse por escrito y ser dirigidas al Ingeniero.

Una vez terminado el período de puesta a disposición del Contratante, de la parte o partes de la obra, se preparará un nuevo informe sobre el estado de las obras del contrato original con la participación de las partes.

(c) A excepción de las consecuencias de los defectos de ejecución que le sean imputables, el Contratista, el Contratante será responsable de la custodia de las obras o partes de obras durante todo el tiempo que ellas estén a su disposición.

5.- Expiración de las Garantías de Cumplimiento y de Pago.

(a) Período de Garantía.

Salvo que el Contrato establezca otra cosa, el período de garantía será igual al período comprendido entre la aceptación provisional y la aceptación final.

Durante el período de garantía, el Contratista tendrá, independientemente de las obligaciones que puedan resultar de la aplicación de la Cláusula 3 de este Artículo, la "obligación de completa terminación" en virtud de la cual deberá, por su cuenta:

(1) ejecutar los trabajos o reparación previstos en los incisos (d) y (e) de la Cláusula 2 de este Artículo.

(2) remediar todas las imperfecciones señaladas por el Contratante o el Ingeniero de tal manera que la obra se mantenga en conformidad sustancial con el estado en que se encontraba en el momento de la aceptación provisional o después de corregidos los defectos detectados durante ella;

(3) ejecutar, si fuere el caso, los trabajos de refuerzo o modificación que el Ingeniero juzgue necesarios y le exija realizar durante el período de garantía; y

(4) entregar al Ingeniero los planos finales de las obras actualizados, conforme a la ejecución final de las obras, en las condiciones previstas en la Cláusula 7 más adelante.

Los gastos correspondientes a los trabajos complementarios exigidos por el Contratante o el Ingeniero y que tengan por objeto dar mantenimiento o mejorar las estipuladas en los incisos (2) y (3) anteriores, serán por cuenta del Contratista.

La obligación del Contratista de realizar los trabajos de completa terminación por su cuenta, no es extensiva a los trabajos necesarios para corregir los efectos del uso o desgaste ordinarios, quedando entendido que la limpieza y conservación corrientes durante el período de garantía corresponden al Contratante.

Al inicio del período de garantía, el Contratista quedará libre de sus obligaciones contractuales y las Garantías de Cumplimiento y de Pago cesarán de derecho, excepto en el caso previsto en la Cláusula 6 a continuación.

6.- Documentos que deberá entregar el Contratista después de la ejecución de las obras.

Salvo otras disposiciones del Contrato e independientemente de los documentos que está obligado a suministrar antes o durante la ejecución de los trabajos, el Contratista entregará al Ingeniero tres (3) ejemplares de lo siguiente:

(b) dentro de los dos (2) meses siguientes a la aceptación, los planos finales de la obra realizada y los demás documentos de ejecución;

(c) planos de detalle de las instalaciones ejecutadas;

(d) cantidades de obra, a nivel de conceptos ejecutados; e

(e) informe final sobre el costo total del Contrato, detallando los ajustes de precios y, de ser el caso, convenios adicionales y gastos financieros recibidos por concepto de retrasos en los pagos.

2.1.4. SECCIÓN 107: CONTROL DE LOS MATERIALES

2.1.4.1. Sección 107.01: Fuentes de Materiales y Requerimientos sobre su Calidad

A menos que hubiera en el Contrato otra disposición en contrario, el

Contratista suministrará todos los materiales que serán usados en la construcción de la obra, de fuentes de su propia elección, excepto otros suministrados por el Contratante y los bancos de materiales que deberán ser indicados en los Documentos de Licitación El Contratante obtendrá para el al Contratista el uso gratis de bancos de suelo, arena, grava o roca sólida, para uso exclusivo en el Proyecto, que se encuentren dentro del Derecho de Vía o en terrenos de su propiedad y realizará todas las gestiones o trámites para adquirir los derechos de explotación de los bancos ubicados propiedades de terceros.

Salvo que las CEC lo establezcan de otro modo, todos los materiales y artículos que vaya a ser incorporados en la obra deberán ser nuevos y llenarán todos los requerimientos de los planos, de las especificaciones generales y de cualquier Especificación Suplementaria o Condición Especial aplicable. La fuente o yacimiento de cada uno de los materiales deberá estar indicada en los documentos de licitación, previamente el ingeniero verificara si los datos mostrados por el diseñado del contratante y/o los procedimientos para que los mismos cumplan con las normas, ahí indicados son validos antes de que comiencen a ser usados en el sitio de la obra. Una fuente de materiales aprobada permanecerá aprobada mientras los materiales obtenidos sean aceptables. Si se encuentra, después de efectuar pruebas, que fuentes de materiales previamente aprobadas no suplen materiales uniformes y satisfactorios, o si el producto de cualquier fuente aprobada dejara de ser satisfactorio en cualquier oportunidad, el Contratista a través del ingeniero deberá suministrar los materiales requeridos de otras fuentes aprobadas y reconocerá los ajustes en los precios contractuales.

La aprobación de materiales por parte del Ingeniero no relevará al Contratista, en forma alguna, de la responsabilidad de corregir o reemplazar obras inaceptables debido a deficiente ejecución, materiales defectuosos u otras causas.

Corrientemente, el Contratante ha localizado y examinado yacimientos de materiales que presentan condiciones aparentemente favorables para su posible uso en las obras. Las CEC contienen información pertinente sobre estas fuentes de materiales.

2.1.4.2. Sección 107.02: Marcas de Fábrica y Alternativas

Por conveniencia, en los planos o en las especificaciones, ciertos artículos o materiales a ser incorporados en la obra, podrán ser designados bajo la marca de fábrica o por el nombre del fabricante y la información contenida en su catálogo.

Salvo disposición en contrario, estas referencias deberán ser consideradas como una manera de establecer un funcionamiento básico o una norma de calidad y no como una limitación de la competencia. El Contratista podrá usar un equipo, material, artículo o proceso que, a juicio del Ingeniero, sea de igual calidad y tenga las características requeridas para el propósito perseguido, siempre que llene los siguientes requisitos:

1.- El costo de la prueba sobre la calidad y funcionalidad de las alternativas correrá por cuenta del Contratista, quien deberá suministrar toda la información necesaria requerida por el Ingeniero. Este será el único juez sobre la calidad y funcionalidad de los artículos o materiales alternativos y su decisión será definitiva y concluyente.

2.- Siempre que las especificaciones permitan la sustitución de un artículo o material por otro similar o equivalente no será hecha ninguna prueba o se tomará acción alguna relacionada con la aprobación del material sustituido, hasta que el Contratista haya hecho la solicitud por escrito, adjuntando los datos completos que identifiquen la calidad y funcionalidad del artículo o material propuesto. Dicha solicitud deberá ser hecha con suficiente anticipación para permitir llevar a cabo los trámites de aprobación sin demorar el trabajo.

2.1.4.3. Sección 107.03: Muestras, Ensayes y Especificaciones de Referencia

Todos los materiales deberán ser aprobados por el Ingeniero previamente a su incorporación en la obra y estarán sujetos a inspección, muestreo, ensayes y aprobación o rechazo en cualquier oportunidad antes o durante su incorporación en la obra.

Cualquier obra en la que sean empleados materiales que no cuenten con la aprobación o permiso por escrito del Ingeniero, según el Artículo-106.12, de estas CGC, será hecha a riesgo del Contratista, a menos que hubiera otra disposición en contrario. Todo material que resulte inaceptable y que no ha sido autorizado, no será pagado y, si así lo indica el Ingeniero, será removido a costa del Contratista.

A menos que se haya indicado lo contrario, cuando se haga referencia en el Contrato a una especificación, norma o método de ensaye adoptado por la AASHTO, ASTM, u otra asociación técnica reconocida, se entenderá que se trata de la especificación, norma o método de ensaye, incluyendo normas provisionales o tentativas, que estén en vigor en la fecha del Aviso de Licitación publicado en los diarios.

A solicitud del Contratista, el Ingeniero suministrará copias de todos los informes de ensayes al representante del Contratista.

1.- Certificación (Ver Artículo-106.12)

2.1.4.4. Sección 107.04: Inspección en Planta

El Ingeniero podrá inspeccionar los materiales en su punto de origen. Las plantas de manufactura podrán ser inspeccionadas periódicamente para comprobar su cumplimiento con los métodos especificados de fabricación, y tomará muestras de material para ser ensayadas en el laboratorio, a fin de comprobar su cumplimiento con los requerimientos de calidad del material. Esta podrá ser la base para la aceptación en cuanto a calidad de lotes de artículos manufacturados o fabricados. En el caso de que tal inspección se efectúe en la planta, se deberán llenar los siguientes requisitos:

1.- El Ingeniero deberá contar con la cooperación y ayuda del Contratista y del productor con quien éste hubiese contratado los materiales.

2.- El Ingeniero deberá tener libre acceso en todo momento a aquellas partes de la planta que tengan relación con la fabricación o la producción de los materiales que estén siendo suministrados.

3.- Si fuese requerido en las CEC, el Contratista deberá contar con un edificio aprobado para uso de la Inspección; dicho edificio estará ubicado convenientemente cerca de la planta, independientemente de cualquier edificio utilizado por el productor del material, y de acuerdo con los requisitos del Artículo 107.07, de estas CGC.

2.1.4.5. Sección 107.05: Materiales Importados

Salvo disposición en contrario de las CEC, todo material, artículo o proceso patentado a ser importado del extranjero para uso o incorporación en las obras del Proyecto, deberá contar con la aprobación previa del Contratante, en lo relativo al cumplimiento con los requisitos de fuente y origen (si esto fuera aplicable). El Contratista suministrará al Ingeniero, para su aprobación, el nombre del Fabricante, el número del modelo y demás datos de identificación, así como toda la información relativa a su composición, diseño, uso y precauciones sobre su manipulación.

Si así lo disponen las CEC, todo artículo y material fabricado en el extranjero será entregado en lugares aprobados dentro del país, donde serán almacenados hasta que sean efectuados su muestreo y ensaye.

El Contratista, sin costo adicional para el Contratante, hará los arreglos para la ejecución de las pruebas que el Contratante no pueda realizar. Las pruebas deberán ser ejecutadas en el país y serán presenciadas por un representante autorizado del Ingeniero.

Los materiales estructurales que requieran informes de análisis químico y físico sólo serán aceptados de aquellos fabricantes que hayan previamente establecido, a satisfacción del Ingeniero, la aceptabilidad del control de calidad de manufactura, para garantizar un material uniforme que llene los requisitos del Contrato. No serán aceptados materiales estructurales que no puedan ser claramente identificados con informes de análisis químico y físico y Certificados de Cumplimiento.

2.1.4.6. Sección 107.06: Materiales Locales

1.- Generalidades.- Se entenderá por materiales locales, aquellos como roca, arena, grava, tierra u otros materiales minerales, fuera del material de préstamo y material selecto locales, obtenidos o producidos de fuentes vecinas al Proyecto, para uso específico en el mismo. No estarán incluidos dentro de esta denominación aquellos materiales obtenidos de fuentes comerciales establecidas.

Los materiales locales serán suministrados por el Contratista de alguna fuente de su propia elección, excepto para el concepto de Préstamo Caso 1, que será obtenido de fuentes designadas en los planos o descritas en las CEC.

El suministro de materiales locales de todo yacimiento está sujeto a las disposiciones del Artículo-103.05 y a las contenidas en el Artículo-105.02.

A menos que una fuente de materiales esté indicada en los planos o descrita en las CEC o que sea aprobada por escrito como tal por el Ingeniero, las fuentes de materiales locales no podrán ser excavadas en lugares donde los cortes, desechos y túmulos resultantes, ofrezcan vistas desagradables desde alguna parte de la vía o representen un peligro para la seguridad del público o de los animales. No será pagado ningún material obtenido con violación de esta disposición. A menos que así lo haya ordenado el Ingeniero.

El Contratante podrá ordenar al Contratista hacer todos los arreglos necesarios para la obtención de los derechos, las servidumbres de acceso y para el acarreo de materiales sobre alguna vía pública o privada, reembolsando los costos incurridos al contratista.

A solicitud escrita del Contratista, el Ingeniero ensayará los materiales de cualquier yacimiento local de su elección que no haya sido ensayado antes. Si se encuentra que el material de dicha fuente es satisfactorio y es usado en el Proyecto, no se cargará a la cuenta del Contratista el costo de los ensayes. En caso contrario, ese costo será deducido de cualquier suma que se le deba o se le llegue a deber al Contratista.

Para todo yacimiento de materiales locales localizado o propuesto por el Contratista, que resulte satisfactorio para la construcción de obras del Proyecto, el Contratista deberá realizar las gestiones para adquirir, los derechos para la extracción y acarreo de los materiales, dicho costo será reembolsable al contratista.

La compensación total por el suministro de la mano de obra, materiales, herramientas, equipo e imprevistos, y por la ejecución de todo el trabajo involucrado en el cumplimiento de las disposiciones de este artículo, para la provisión y producción de materiales de cualquier fuente (con excepción de los derechos de explotación), será considerada como incluida en el precio pagado por el concepto de obra en que dicho material sea usado y no habrá compensación adicional alguna por el mismo.

2.- Posibles Fuentes de Materiales Locales.- Los planos, las CEC o ambos, suelen mostrar o describir posibles fuentes de materiales locales ubicadas en terrenos nacionales o privados, dentro o fuera de la zona del Proyecto. En casos de yacimientos localizados en terrenos privados, el Contratante hará arreglos preliminares con el Propietario del terreno donde está localizado el yacimiento o banco, para que, si es escogido definitivamente para extraer materiales para el Proyecto, entrar en tratos de arriendo o de compra (según su importancia y magnitud), entendiéndose que, de acuerdo con la Ley, los materiales de yacimientos o bancos son propiedad del Estado aunque el terreno sea privado.

Los arreglos preliminares entre el Contratante y el Propietario del terreno, legalizados de acuerdo con la Ley, incluirán el precio del terreno del banco y del camino de acceso o de acarreo, áreas de acopio y de instalaciones conexas, prevención de daños y perjuicios en el resto de la propiedad colindante (terrenos, cercas, corrientes o depósitos de agua, estructuras, ganado, cultivos, sistemas de riego, tanques, casas, etc.). El objeto de estos arreglos preliminares es el de dar a todos los oferentes una base para la preparación de las ofertas. El Contratante pondrá a disposición de los oferentes, a solicitud por escrito de los interesados, la documentación sobre los arreglos o convenios celebrados con los Propietarios de los terrenos para cerciorarse de los términos, condiciones, limitaciones y obligaciones acordados entre el Contratante y los Propietarios que, en caso de tener que usar dichos materiales, correrán por cuenta del Contratante.

En casos en que el Contratante haya levantado “Información sobre Materiales” como la mencionada en el Artículo-103.05, que podrá incluir los convenios preliminares con los Propietarios de los terrenos en cuanto a la extracción de los materiales. La inclusión de tales

documentos en modo alguno descargará la responsabilidad del Contratante o del Contratista con respecto a alguna de las disposiciones contenidas en este artículo en cuanto a esos documentos.

El Oferente o Contratista deberá hacer en forma independiente y bajo su propia responsabilidad, todas las investigaciones y exámenes necesarios para satisfacerse en cuanto a la calidad y cantidad de los materiales aceptables disponibles en cada yacimiento, sobre el tipo y grado de procesamiento que puedan ser requeridos, incluyendo trituración, lavado de agregados o eliminación de finos, secamiento, estabilización mecánica o química, cribado, etc., a fin de producir materiales que llenen satisfactoriamente los requisitos de las especificaciones, y sobre los arreglos preliminares celebrados entre el Contratante y los Propietarios de los terrenos en que se encuentra el material, en los cuales se establecen las condiciones, obligaciones y limitaciones a ser asumidas por el Contratista antes, durante y después de la explotación.

El Ingeniero podrá autorizar el uso de material de cualquier parte de un yacimiento o banco y rechazar materiales inaceptables existentes en otra parte del mismo yacimiento. En general, el Ingeniero podrá rechazar yacimientos o bancos cuando se detecte la coexistencia de materiales aceptables con otros inaceptables.

Aunque el Contratista haya decidido obtener materiales de algunos de los terrenos elegibles (indicados por el Contratante, o no), no podrá proceder a la explotación de los mismos sin antes el Contratante haya realizado los siguientes trámites:

2.1) Firma de un documento legalizado que libre al Propietario del terreno del yacimiento (público o privado) de reclamos por accidentes a personas, animales o a la propiedad (incluso el medio ambiente y los recursos naturales) resultantes de las operaciones del Contratista dentro de los límites del terreno sujeto a explotación. En el mismo documento, el Contratista deberá obligarse a cumplir con todas las demás disposiciones y responsabilidades contenidas en el Convenio Preliminar celebrado entre el Contratante y el Propietario del terreno (que podrá considerar el arriendo o la compra del terreno a un precio determinado).

Si el Contratista prefiere obtener el material bajo las condiciones estipuladas en el párrafo 2.1) de este Artículo, la explotación del terreno quedará sujeta a los términos, condiciones y limitaciones contenidos en el Convenio Preliminar celebrado entre el Contratante y el Propietario (que podrán ser de arriendo o de compra del terreno). En caso de violación de tales términos, condiciones y limitaciones por parte del Contratista, el Contratante deducirá los valores requeridos para cumplirlos, de cualquier suma que le deba o le llegue a deber al Contratista. Es entendido que los llamados términos, condiciones y limitaciones se refieren únicamente a daños y perjuicios resultantes de las operaciones de la explotación del yacimiento ya que no será necesario pagar "derechos de explotación" del material o regalías por su extracción.

2.2) Si el Contratista decide obtener el material de fuentes de su propia elección, aprobadas por el Ingeniero, se aplicará lo estipulado en el párrafo siguiente:

Legalizar un convenio con el Propietario del terreno donde yace el material, bajo los mismos términos, condiciones, limitaciones y obligaciones a que se refiere el Artículo 2.1, excepto que el Contratante no quedará obligado a deducir, a favor del Propietario, el costo de los términos, condiciones, limitaciones y obligaciones, en casos de violación del Convenio por parte del Contratista. La redacción de este Convenio deberá ser aprobada previamente por el Contratante.

En cualquiera de los dos casos, (2.1 ó 2.2), antes de la aceptación final del Proyecto, el Ingeniero podrá demandar del Contratista la presentación de evidencias de que ha cumplido con todos los compromisos contraídos en relación con los convenios celebrados con los propietarios de terrenos de donde haya sido extraído material para uso en el Proyecto, sin perjuicio de las demás obligaciones relativas a la protección del paisaje, del medio ambiente y de los recursos naturales.

La compensación por el cumplimiento con lo estipulado en los convenios con los propietarios de los terrenos en que están localizados los yacimientos de materiales explotados para uso en el Proyecto, y por el suministro de toda la mano de obra, materiales, equipo, herramientas, la administración e imprevistos, y por ejecutar todos los trabajos involucrados en la explotación, producción y uso de los materiales especificados provenientes de yacimientos o bancos naturales, incluyendo el abra y destronque, descortezado (destape) del área, la construcción de caminos de acceso, cercas, portones, drenaje, etc., excepto cuando el Pliego de Licitación incluya conceptos de pago para estos trabajos, y por toda la excavación (y/o voladura, en su caso) y el procesamiento del material, de la naturaleza y grado que fueran necesarios, será considerada como incluida en el precio pagado por el concepto o conceptos de pago en que se usen tales materiales, sin que el Contratante tenga que pagar compensación adicional alguna.

3.- Préstamo, Caso I.- Cuando el Contratante designe en los planos o describa en las CEC, yacimientos de materiales locales para uso en las obras, el Contratista, por su cuenta, hará todos los trabajos y procesamientos que sean necesarios para obtener y producir de tales yacimientos, materiales que cumplan con las especificaciones.

Si el Ingeniero determina que las fuentes de materiales locales de este tipo ya no seguirán siendo usadas debido a que se agote el material aceptable o por otras razones, designará una o más fuentes alternativas de las cuales podrá el Contratista obtener el material faltante, bajo las mismas condiciones ya señaladas, en la Cláusula 2 de este Artículo.

En este último caso, el Contratante pagará al Contratista el costo de movilización y erección de sus instalaciones y equipos en las nuevas fuentes como Trabajo Extra, según el Artículo-105.03 de estas CGC, al igual que la construcción de caminos de acceso, cercas, abra y destronque y descortezado que fueran requeridos, según lo determine el Ingeniero. El Contratante pagará o deducirá, según sea el caso, el aumento o disminución en los costos de acarreo resultante de la nueva ubicación del yacimiento. Ese pago sería hecho como Trabajo Extra. También será reconocida compensación adicional por tiempo perdido o demora en la conclusión de las obras, causados por la movilización de las instalaciones y equipos del Contratista de la fuente original a la fuente alternativa, y modificar si fuese necesario el plazo del Contrato de conformidad con el Artículo-109.06, de estas CGC. Todo procesamiento del material de la fuente alternativa que sea requerido y que exceda el que estuviere indicado en las CEC para el material de la fuente original y que, en opinión del Ingeniero, sea necesario para producir material aceptable de la fuente alternativa, será pagado como Trabajo Extra.

El Contratista deberá firmar con el Propietario del terreno del yacimiento alterno, los convenios señalados en la Cláusula 2 de este Artículo, ya que estará sujeto a los términos, condiciones, obligaciones y limitaciones mencionados en ella.

La compensación total por el suministro de toda la mano de obra, materiales, herramientas, equipo, administración e imprevistos, y por ejecutar todo el trabajo involucrado en la extracción y producción de materiales especificados de fuentes señaladas por el Contratante, incluyendo la construcción de caminos de acceso, cercas, portones, será considerada como incluida en el precio pagado por el concepto o conceptos de obra en que se use tales materiales y no será pagada compensación adicional alguna.

2.1.4.7. Sección 107.07: Laboratorio de Campo - Tablero de Avisos

Todas las instalaciones y estructuras provistas por el Contratista bajo este Artículo continuarán siendo de su propiedad y deberán ser retiradas por él cuando ya no sean necesarias según el Ingeniero. No será hecho ningún pago adicional por las estructuras y servicios, sino que se considerará que su costo ha sido incluido en los conceptos de pago del Contrato.

El Contratista deberá proveer una caseta a prueba de intemperie o una casa remolque para uso exclusivo del Ingeniero como laboratorio de campo.

La estructura deberá tener un espacio de trabajo adecuado para realizar las operaciones de los ensayes que sean requeridos y deberá tener los servicios de agua potable, energía y demás servicios indispensables para cumplir sus funciones. Las dimensiones y características mínimas de dicha caseta, de ser necesaria, serán indicadas en los planos o en las CEC. Además, el Contratista deberá suministrar en cada uno de los lugares en que instale una planta de trituración, una caseta para laboratorio de campo con techo impermeable, con dimensiones externas de 6 metros por 12 metros y 2.40 metros de altura al cielo raso y que tenga, por lo menos, dos ventanas que puedan ser abiertas y una puerta con cerradura. La caseta estará provista de una mesa de trabajo con dimensiones de, por lo menos, 75 centímetros por 2.40 metros. La mesa contará con una pileta que desagüe al exterior y cañería para suministro de agua con su correspondiente grifo. El abastecimiento de agua podrá ser hecho por medio de un tanque alimentado por gravedad, con una capacidad mínima de 54 galones. El Contratista está obligado a proveer agua en cantidad suficiente para que se puedan realizar los ensayes. La caseta deberá estar equipada también con instalaciones eléctricas que suministren corriente alterna de 110 voltios y 60 ciclos, para iluminación y la operación del equipo de laboratorio. La caseta deberá estar lista y en condiciones de permitir efectuar ensayes, antes de que las operaciones del Contratista exijan la ejecución de los mismos en el campo.

El Contratista, asimismo, deberá proveer y conservar un tablero macizo, de buen tamaño y a prueba de intemperie y de vandalismo, para la continua exhibición de boletines, avisos, de carteles y otras informaciones requeridas en el Contrato, el cual deberá estar colocado en un lugar conspicuo y accesible en el sitio del Proyecto, hasta la aceptación final de la obra.

2.1.4.8. Sección 107.08: Acopiamiento de Materiales

Los materiales deberán ser acopiados de tal manera que se asegure la conservación de sus cualidades y propiedades para la obra. El equipo y los métodos usados para el apilamiento de agregados y para retirar éstos de las pilas, serán tales que no impliquen pérdida o segregación perjudicial del agregado, que no se le incorpore ninguna cantidad regular de materia extraña al mismo y no se revuelvan materiales de pilas diferentes. Las pilas se formarán por capas de no más de un metro (1.00 m) de espesor. Cuando los materiales sean acopiados por medio de bandas transportadoras, los conos no deberán exceder de un metro y ochenta centímetros (1.80 m) de altura.

Los materiales acopiados, aun cuando hayan sido aprobados antes de ser acopiados, podrán ser inspeccionados otra vez antes de ser incorporados en la obra. Los materiales acopiados serán ubicados de modo que se facilite su rápida inspección. Se podrá hacer uso de áreas del Derecho de Vía para fines de acopiamiento y para la instalación de la planta y equipo del Contratista, pero todo el espacio adicional necesario para tales fines deberá ser procurado por el Contratista por su propia cuenta. No se hará uso de terrenos de propiedad particular para fines de acopiamiento, a menos que se cuente con permiso por escrito del Propietario o arrendatario y, en caso de solicitarlo el Ingeniero, le serán entregadas copias de dicho permiso escrito. Todos aquellos lugares de los cuales se hubiere removido material acopiado, deberán ser restaurados a sus condiciones originales por el Contratista, a sus expensas.

2.1.4.9. Sección 107.09: Manejo de Materiales

Todos los materiales deberán ser manejados en tal forma que conserven sus cualidades y características propias para el trabajo a que estén destinados. Los agregados deberán ser acarreados del lugar en que estén depositados hasta la obra, en vehículos bien cerrados, construidos de tal modo que eviten la pérdida o la segregación después de haber sido medidos y cargados, con el fin de que no surjan contradicciones respecto a las cantidades efectivamente recibidas en el lugar de las operaciones. Los materiales inflamables o explosivos, en particular los combustibles de petróleo, productos petroquímicos altamente volátiles o tóxicos, o dinamita, gelatina y similares, serán manejados de acuerdo con las regulaciones vigentes de salubridad nacional, de seguridad del público y las NABCV.

2.1.4.10. Sección 107.10: Materiales Inaceptables

Todos los materiales que no estén en conformidad sustancial con los requisitos de las especificaciones al ser ensayados para su aceptación, serán considerados como inaceptables y rechazados de acuerdo con el Artículo 106.03, de estas CGC y, por tanto, retirados inmediatamente del lugar de la obra, a menos que los defectos sean corregidos y el material fuere aprobado posteriormente por el Ingeniero.

Los materiales rechazados cuyos defectos hubieren sido corregidos, podrán ser utilizados una vez que el Ingeniero lo autorice.

2.1.4.11. Sección 107.11: Materiales Suministrados por el Contratante

El Contratante, a veces, pone a disposición del Contratista, para uso en las obras bajo Contrato, aquellos materiales descritos en las CEC, si fuera el caso (por ejemplo, piedra triturada por otros). Cualquier material que sea suministrado por el Contratante será entregado o puesto a la disposición del Contratista, en los lugares indicados en las CEC o mostrados en los planos. Se considerará que el costo del manejo y la colocación de todos esos materiales, después de entregados al Contratista, está incluido en el precio del Contrato para las obras en que serán usados, con las siguientes excepciones y aclaraciones:

1.- En el caso de que los materiales a ser suministrados por el Contratante no pudieran ser puestos a disposición del Contratista en la fecha y lugar estipulados y convenidos, el Ingeniero, a solicitud del Contratista, determinará la magnitud de la demora ocasionada por tal hecho y hará un ajuste equitativo en el plazo y valor del Contrato, si fuera necesario, por medio de un Acuerdo Suplementario.

Si los materiales a ser suministrados por el Contratante fueran recibidos por el Contratista en condiciones no apropiadas para el uso pretendido, el Contratista notificará al Ingeniero sobre tal hecho dentro de diez (10) días después del recibo de dichos materiales. El Ingeniero en tal circunstancia, reemplazará los materiales inadecuados o los adecuará por medio del Contratista. En este caso, el Ingeniero hará un ajuste equitativo en el plazo contractual y en los costos, asimismo revisará para pago los daños y perjuicios.

2.- Por medio de nota dirigida al Contratista, el Ingeniero podrá disminuir, en cualquier cantidad, el volumen estipulado de materiales a ser suministrados por el Contratante según las CEC, y el Contratista no tendrá derecho a ningún ajuste en el valor del Contrato.

En esta eventualidad, el Contratista suplirá los materiales necesarios al precio unitario fijado en el Contrato para esta circunstancia. El Ingeniero, a solicitud del Contratista, hará un ajuste equitativo en el plazo contractual por alguna demora que le fuere causada por este hecho compensará económicamente los daños y perjuicios.

3.- Los materiales suministrados por el Contratante, a menos que se disponga de otra manera en las CEC, serán usados únicamente para las obras consideradas en el Contrato.

4.- El Contratista mantendrá y administrará, de acuerdo con prácticas técnicas sanas, un programa de transporte, manejo, acopiamiento, protección y preservación de los materiales suministrados por el Contratante y será responsable de tales materiales, excepto en los casos de Fuerza Mayor.

Por aquellos faltantes, deficiencias o daños que no sean justificados o para los cuales no haya explicación, se deducirán al Contratista los valores correspondientes de cualquier suma que se le deba o se le llegue a deber. En el caso de pérdidas o destrucción de tales materiales a causa de falta o negligencia del Contratista, éste reemplazará los materiales perdidos o destruidos o pagará al Contratante, en concepto de indemnización, una suma igual al valor de tales materiales que aparezca especificado en las CEC. Esta indemnización será deducida de cualquier suma que se le deba o se le llegue a deber al Contratista.

5.- El Ingeniero, en toda oportunidad razonable y con fines de inspección, tendrá libre acceso a los lugares en que estén acopiados o guardados los materiales suministrados por el Contratante.

6.- A la conclusión de las obras bajo contrato, o en fechas más tempranas, a criterio del Ingeniero, el Contratista entregará, en documento aceptable para el Ingeniero, una lista de todos los materiales suministrados por el Contratante que no hayan sido utilizados en la ejecución de las obras contratadas, incluyendo cualquier material recuperado.

7.- El Contratista devolverá los materiales suministrados por el Contratante que no hayan sido usados en las obras bajo contrato, en condiciones similares a las que tenían cuando le fueron entregados considerando su deterioro normal o adecuados de conformidad con lo estipulado en la Cláusula (1) de este Artículo.

2.1.5. SECCIÓN 108: RESPONSABILIDADES ANTE LA LEY Y EL PUBLICO

2.1.5.1. Sección 108.01: Conocimiento de las Leyes y Reglamentos

Es entendido que el Oferente tiene conocimiento de todas las leyes y reglamentos de la República de Nicaragua que sean aplicables a este Contrato. El Contratante considerará que este conocimiento es un hecho y, por consiguiente, los Oferentes no podrán alegar ignorancia en ningún caso. Aunque el Contratante sea una entidad gubernamental, habrá otras dependencias del Gobierno que tendrán relación con el Contrato, especialmente en la concesión de licencias, exenciones, permisos, etc. El Contratista deberá conocer y cumplir con los trámites y regulaciones establecidas en cada una de estas dependencias. Las excusas de malos entendidos o ignorancia de parte del Contratista, no servirán en modo alguno para modificar las condiciones del Contrato.

El Contratista deberá conocer, obedecer y cumplir con todas las leyes de la República de Nicaragua, códigos, reglamentos sobre seguridad, sobre protección del medio ambiente, ordenanzas y regulaciones gubernamentales y municipales, y con todas las órdenes y decretos emanados de autoridades que tengan jurisdicción en el Proyecto y que en alguna forma afecten al personal que trabajará en la obra, a los materiales y al equipo que será usado. El Contratista deberá proteger e indemnizar al Contratante y a sus Representantes contra cualquier reclamación o responsabilidad originada por la violación de cualquiera de tales leyes, códigos o reglamentos antes mencionados, cometida por él mismo o por sus empleados durante la ejecución de las obras bajo contrato. Es por ello obligatorio que el Contratista esté respaldado por un seguro de responsabilidad civil.

Asimismo, se da como un hecho que el contratista conoce todas las leyes y regulaciones de la institución crediticia o donante que esté financiando la obra, si fuera el caso.

2.1.5.2. Sección 108.02: Impuestos, Derechos, Gravámenes y Cotizaciones

(a) El Precio del Contrato incluirá los impuestos, derechos, gravámenes y cotizaciones de toda índole exigibles fuera del país, en relación con la realización de los trabajos objeto del Contrato, en particular los correspondientes a fabricación, venta y transporte de suministros y equipos que vayan o no a ser incorporados en las obras, así como los correspondientes a todos los servicios suministrados, cualquiera que sea su naturaleza.

(b) Salvo disposición contraria en las presentes CGC y en las CEC, el Precio del Contrato comprenderá igualmente, todos los impuestos, derechos, gravámenes y cotizaciones de toda índole exigibles en el país, los cuales se calcularán teniendo en cuenta las modalidades de base tributaria y de tasas fiscales vigentes 28 días calendario antes de la fecha límite para la presentación de las ofertas.

(c) Los precios comprenderán también los impuestos, derechos y gravámenes exigibles en el momento de la importación, tanto definitiva como temporal, de los suministros, materiales y equipos necesarios para la realización de las obras. Comprenderán igualmente el conjunto de impuestos, derechos y gravámenes exigibles al personal del Contratista y a sus proveedores, abastecedores o Subcontratistas.

(d) Cuando la reglamentación del país lo establezca, el Contratista pagará las cotizaciones; impuestos, derechos y gravámenes que adeude directamente a los organismos competentes del país y presentará al Contratante, en caso de que sea requerido, la evidencia de los pagos correspondientes.

(g) Las CEC describen con mayor amplitud los principales impuestos, derechos, gravámenes y cotizaciones vigentes en el país, veintiocho (28) días calendario antes de la fecha límite para la presentación de las ofertas, a cargo del Contratista, sus proveedores, abastecedores y Subcontratistas.

(h) En caso de que el Contratante obtenga de la autoridad aduanera un régimen de exoneración o de suspensión no previsto originalmente para los impuestos, derechos y gravámenes exigibles en el momento del ingreso definitivo o temporal de los suministros, materiales y equipos, se efectuará una disminución igual al valor exonerado deducible la parte pagadera en moneda nacional, y dicha disminución se hará constar en una Orden de Cambio. En el caso de que, para obtener tal ventaja, deba presentarse a la autoridad fiscal y aduanera una fianza o garantía, el costo de la misma será por cuenta del Contratante.

(i) En caso de modificaciones en la reglamentación fiscal, aduanera o social con respecto a la reglamentación aplicable veintiocho (28) días calendario antes de la fecha límite para la presentación de las ofertas, cuyo efecto sea un aumento de los costos del Contratista, éste último tendrá derecho a un aumento correspondiente del Precio del Contrato. Con este fin, el Contratista notificará al Ingeniero, dentro de los dos (2) meses siguientes a cualquier modificación, las consecuencias de la misma. Dentro del plazo de un (1) mes después de recibida la notificación, el Ingeniero, propondrá al Contratante la redacción de una Orden de Cambio en la que se preverá, en cualquier caso, un pago en moneda nacional. En caso que el Contratista y el Contratante no lleguen a un acuerdo sobre los términos de la Orden de Cambio un (1) mes después de la notificación del Ingeniero al Contratante, se aplicará el procedimiento de arreglo de diferencias estipulado en el CGC.

(j) Monedas y tasas de cambio. Proposiciones de Monedas.

Cuando las IEO especifiquen que la oferta se cotizará en moneda nacional pero que el pago se puede hacer en más de una moneda y el Contratista en su oferta haya especificado las proporciones del Precio del Contrato a pagar en moneda(s) extranjera(s), la(s) tasa(s) de cambio aplicable(s) para el cálculo será(n), salvo que se estipule otra cosa en las CEC, la(s) que figuran en la oferta.

2.1.5.3. Sección 108.03: Permisos

A menos que se dispusiera de otra manera en las CEC, el Contratante, deberá obtener las licencias y permisos requeridos por leyes y decretos de la República, de los Municipios, etc., que tengan jurisdicción, para proceder a ejecutar los trabajos de conformidad con el Contrato. Ejemplos de tales licencias y permisos son, entre otros, los siguientes: los Permisos Ambientales Especiales, los permisos de construcción. El Contratista obtendrá las licencias y permisos de las placas de circulación de los vehículos, derecho de uso de acera, revisado mecánico de vehículos y permisos de permanencia de personal extranjero.

2.1.5.4. Sección 108.04: Uso de Dispositivos, Materiales y Procesos Patentados

Al aceptar y firmar el Contrato, el Contratista acepta en liberar al Contratante de toda responsabilidad sobre quejas y reclamos por daños y perjuicios resultantes del uso por parte del Contratista de cualquier diseño, dispositivo, material o proceso que esté respaldado por una patente, derechos de autor o marca registrada. Cuando fuere necesario, el Contratista obtendrá las autorizaciones o permisos necesarios de los dueños de tales patentes, derechos de autor o marcas de fábrica y pagará la compensación, impuesto o indemnización por daños y perjuicios a que estuviere sujeto de acuerdo con la ley. La evidencia del cumplimiento con esta disposición deberá el Contratista entregarla por escrito al Ingeniero.

Si un tercero demandara al Contratante por causa del uso ilegal por parte del Contratista de diseños, dispositivos, materiales o procesos sujetos a patentes o derechos de autor, el Contratista será responsable por el pago de las costas, daños y perjuicios legales involucrados. (Ver Artículo 108.20)

2.1.5.5. Sección 108.05: Certificación sobre Honorarios Condicionales

El Contratista deberá certificar que no ha recurrido a ninguna persona o agencia promotora de negocios para obtener la adjudicación del Contrato, mediante el pago de una comisión, porcentaje, corretaje u otro tipo de remuneración condicional. Este requerimiento no será aplicable a los casos de empleados permanentes del Contratista o de agencias de buena fe establecidas por él con el objeto de promover sus negocios.

La violación de esta disposición dará al Contratante el derecho de rescindir el Contrato, sin que por ello tenga el Contratista derecho a reclamo por la vía judicial.

2.1.5.6. Sección 108.06: Traspaso de derechos

El Contratista no podrá transferir, traspasar, subcontratar, cambiar o modificar el Contrato sin la aprobación previa y por escrito del Contratante.

2.1.5.7. Sección 108.07: Participación de Funcionarios Públicos

La participación de funcionarios públicos en el suministro de bienes y servicios relacionados con la construcción de las obras bajo contrato, estará limitada por las disposiciones de la Constitución de la República y la Ley.

2.1.5.8. Sección 108.08: Empleo de Trabajadores Convictos

Para la ejecución de los trabajos contemplados en este Contrato, el Contratista no podrá emplear a ninguna persona que esté bajo auto de formal prisión.

2.1.5.9. Sección 108.09: Idioma Contractual

El Contrato será redactado en idioma español, así como toda la documentación contractual, incluyendo los Certificados de Pago, Directivas, Órdenes de Cambio y correspondencia relativa a la obra.

2.1.5.10. Sección 108.10: Uso de Personal Nicaragüense y Extranjero

A menos que el Contratista demuestre ante las autoridades laborales competentes la inexistencia o escasez de personal nicaragüense idóneo, para los trabajos de construcción previstos en este Contrato, podrá emplear no más del 10% de personal extranjero en cada una de las siguientes clasificaciones:

1) De Ingeniería (Ingenieros, Topógrafos, Dibujantes, etc.).

2) Oficinistas, mecanógrafos o equivalentes.

3) Especializados.

4) Semi- Especializados.

5) Trabajadores no Especializados.

Por lo menos, un 25% del personal directivo y profesional será de nacionalidad nicaragüense aceptable al Contratante. Dichos funcionarios deberán tener acceso y participación en las decisiones de carácter técnico y administrativo relacionadas con la ejecución de la obra.

2.1.5.11. Sección 108.11: Discriminación en el Empleo

Al emplear trabajadores para las obras objeto de este Contrato, el Contratista no discriminará a ninguna persona por motivos de raza, color, sexo, nacionalidad, ancestro ni creencias políticas o religiosas, excepto en lo que se refiere a las estipulaciones del Artículo 108.10 Uso de Personal Nicaragüense y Extranjero. La violación de esta disposición, que es de orden constitucional, será puesta en conocimiento de las autoridades laborales competentes por el Contratante y expondrá al Contratista a las sanciones consideradas por las leyes.

2.1.5.12. Sección 108.12: Rotura Autorizada de Superficies

El Contratante hace reserva del derecho de las Entidades a cargo de los servicios públicos con jurisdicción en la zona donde esté localizado el Proyecto, a construir o reconstruir obras de servicio público (agua, luz, teléfonos, gas, etc.) dentro del Derecho de Vía o de extender permisos para tal fin, en cualquier oportunidad, el Contratista tendrá derecho a reclamos por daños y ajuste en el plazo del Contrato por alguna demora causada por el trabajo así permitido.

Cuando un individuo, firma o corporación sea autorizada, por medio de un permiso sancionado por el Gobierno, el Contratista deberá permitir a las partes que muestren tal permiso, y solamente para uso de ellas, hacer aberturas en la vía construida o en proceso de construcción. Cuando lo ordene el Ingeniero, el Contratista deberá hacer, de una manera aceptable, todas las reparaciones necesarias para restaurar la parte de vía afectada. Ese trabajo será compensado de acuerdo con el Artículo-110.06, a menos que estuviere dispuesto de otra manera en las CEC, y estará sujeto a las mismas condiciones del trabajo original realizado.

2.1.5.13. Sección 108.13: Disposiciones sobre Sanidad y Salubridad

El Contratista deberá proveer y mantener en condiciones sanitarias aceptables los servicios necesarios para uso de sus empleados y de los empleados del Contratante. La localización de tales instalaciones, en campamentos o en otro lugar, así como su condición estará sujeta a la aprobación del Ingeniero y deberá llenar los requisitos exigidos en las Normas Ministeriales del Código del Trabajo sobre el particular y las NABCV.

2.1.5.14. Sección 108.14: Conveniencia y Seguridad Públicas

El Contratista deberá conducir sus operaciones constructivas permanentemente en tal forma que se eviten los riesgos de accidentes y se garanticen la conveniencia, seguridad y salud del público en general y la de los residentes aledaños a la vía en construcción o mejoramiento, asegurando la protección de las personas y de la propiedad.

1.- Medidas de Seguridad Contra Accidentes en el Sitio de la Obra.-

1.1) El Contratista deberá conocer, antes de iniciar sus operaciones, todos los lugares que propone establecer como sitios de trabajo y tener bien definidas las entradas y salidas a tales sitios. El Contratista deberá observar todas las regulaciones e instrucciones del Contratante y las autoridades municipales o locales con jurisdicción en los lugares en que se lleva a efecto el trabajo, en relación con las molestias, los riesgos de accidentes de tráfico y de trabajo, así como con el resguardo de la propiedad. Todos los procedimientos puestos en práctica por el Contratista para resguardar la seguridad de sus trabajadores y del público estarán sujetos a la aprobación del Ingeniero;

1.2) El Contratista deberá llevar un registro minucioso de todos los accidentes ocurridos a sus trabajadores y al público durante el curso de las obras bajo contrato, especificando si han sido mortales o han dejado a personas incapacitadas para trabajar o con lesiones que requieren atención médica y ocasionen pérdidas de horas de trabajo. Todo accidente de trabajo deberá ser informado inmediatamente ante las autoridades laborales con jurisdicción. Los accidentes de tráfico deberán ser reportados, además, ante las autoridades de tráfico más cercanas;

1.3) El Contratista se abstendrá de importar, vender, dar, intercambiar o de cualquier otra manera hacer llegar a manos de otros, bebidas alcohólicas o licores, fuera de las disposiciones de las leyes o reglamentos nacionales y locales. Esta prohibición será igualmente aplicable a subcontratistas, empleados y trabajadores;

1.4) El Contratista se abstendrá de dar, intercambiar o de otro modo hacer pasar a manos de alguna otra persona, armas o municiones de cualquier clase que sean, ni tolerar tales transacciones a subcontratistas, empleados y trabajadores. Para fines de vigilancia con uso de armas, deberá cumplir con las disposiciones de las leyes y reglamentos nacionales y locales que regulen estas actividades.

2.- Medidas de Seguridad Nacional.- Si la Convocatoria o las CEC expresaran que el trabajo objeto del Contrato tiene aspectos que pueden afectar a la seguridad pública o la defensa nacional, se aplicarán las siguientes disposiciones:

2.1) Cuando sea necesario al interés nacional y, para proteger la seguridad de la obra, el Ingeniero tendrá la autoridad de ordenar al Contratista la suspensión del trabajo y retirar a todo su personal del sitio de la obra. El Contratante sumirá la responsabilidad por las consecuencias de esta orden; Las compensaciones serán las establecidas en la Sección-109.10 fuerza Mayor

2.2) Si el Contratista detectara alguna acción que está causando o amenazando causar daños a la obra, deberá notificar inmediatamente al Ingeniero. El no hacerlo podría dar lugar a acciones judiciales en contra suya, a la cancelación del Contrato, o a ambas;

2.3) Si después de recibir un informe de esa naturaleza, el Ingeniero determina que se necesitan medidas especiales de seguridad, El Ingeniero las ordenará como trabajo adicional, El Contratista pondrá en efecto tales medidas.

2.4) El Contratista será responsable de notificar las estipulaciones contenidas en los incisos (2.1), (2.2) y (2.3) que anteceden a subcontratistas y a su personal de supervisión en el sitio de la obra;

2.5) Resguardo del Sigilo.

2.5.1) Cuando el Contrato tenga carácter de confidencial, en su totalidad o en parte, o cuando el trabajo vaya a ser llevado a efecto en lugares en donde haya que tomar medidas preventivas especiales para asegurar el sigilo o de cualquiera otra manera proteger el interés nacional, el Gobierno, dando cumplimiento a lo prescrito en la ley 323 para estos casos, a través de la dependencia que corresponda, invitará a las compañías privadas calificadas para proyectos conectados con la defensa nacional a presentarse a las oficinas correspondientes a recibir instrucciones relativas al sigilo. Cada Oferente así instruido estará considerado como plenamente informado acerca de tales instrucciones;

2.5.2) Al ser adjudicado el contrato o contratos, el Contratante hará del conocimiento de los Contratistas cualquier medida o medidas preventivas especiales que deban ser tomadas;

2.5.3) El Contratista y sus subcontratistas deberán hacer uso de todo medio legal para salvaguardar y proteger cualquier material clasificado como de tipo confidencial que les fuera confiado y notificarán inmediatamente al Ingeniero sobre cualquier pérdida o incidente inesperado que pudiera ocurrir. Todas las partes involucradas deberán mantener en secreto toda información de tipo militar que llegue a su conocimiento durante la ejecución del trabajo;

2.5.4) El Contratista será responsable por la observancia de las instrucciones relativas al control de su personal y al resguardo del sigilo contenidas en órdenes recibidas para la puesta en práctica de medidas preventivas. Igualmente será responsable por las acciones de sus subcontratistas en este particular;

2.5.5) El Contratista no tendrá derecho a compensación adicional por los costos en que pudiera incurrir en relación con la protección del sigilo. Tales costos serán considerados como incluidos en los precios unitarios y globales correspondientes a los conceptos de pago del Contrato;

2.5.6) Si el Contratista, o cualquiera de sus subcontratistas, no cumpliera con las disposiciones relativas a la protección del sigilo, se considerará que ha violado el Contrato, en cuyo caso el Contratante entablará las acciones pertinentes contenidas en el Artículo-109.08 de estas CGC. El Contratista, en este caso particular, quedará sujeto, además a ser demandado criminalmente de acuerdo con la Ley.

2.1.5.15. Sección 108.17: Protección y Restauración de la Propiedad y del Paisaje

El Contratista será el único responsable por todo daño, pérdida o inconveniencias ocasionadas en las propiedades, pública o privada, y por todas las demandas, acciones o reclamos de cualquier carácter entablados por causa de daños que pudieran resultar de su manera de conducir el trabajo. Cuando resulten daños o perjuicios, directos o indirectos, en las propiedades, pública o privada, por causa de cualquier acto, omisión, descuido o mala dirección en la ejecución del trabajo por parte del Contratista, éste será responsable de restaurar dichas propiedades, a sus expensas, hasta dejarlas en una condición similar a la existente antes de producirse el daño.

Cuando el sitio de la obra esté adyacente o dentro de la propiedad de ferrocarriles, puertos, aeropuertos, carreteras, sistemas telefónicos, eléctricos, semafóricos, de agua potable, y de aguas negras y de estructuras subterráneas, árboles, sembrados, cercas u otras propiedades e instalaciones que sean vitales para el público, el Diseñador deberá incluir en los planos toda la información necesaria relativa a tales propiedades o sistemas y dará aviso por escrito a los propietarios o a la autoridad correspondiente, con no menos de SIETE (7) días de anticipación al comienzo de sus operaciones. Él deberá proceder con el trabajo hasta que haya tomado las medidas de protección con la aprobación y bajo la autoridad de los dueños o instituciones involucradas.

Los mojones, monumentos, puntos de control y demás referencias fijadas por el INETER, el Contratante o por personas privadas, deberán ser cuidadosamente protegidos por el Contratista y no serán removidos o perturbados de ninguna manera, excepto siguiendo las instrucciones de los dueños de dichas marcas y bajo la supervisión de ellos.

El Contratante hará las gestiones y convenios necesarios con las instituciones respectivas para la remoción de las instalaciones de servicios públicos y otras propiedades que interfieran con las operaciones del Contratista. Este deberá cooperar con estas instituciones a fin de facilitar un progreso continuo en su trabajo y evitar interrupciones en la operación de los servicios públicos. Si ocurriera una interrupción en los sistemas de servicios públicos, el Contratista deberá notificar inmediatamente a la institución respectiva y cooperar de lleno para que las reparaciones necesarias sean realizadas en el menor tiempo posible.

Cuando se informe al Ingeniero sobre cualquier daño sufrido por la propiedad pública o privada, que no sea en los sistemas de servicio público, éste hará una inspección para determinar si el daño ha sido causado por cualquier acto del Contratista en la conducción del trabajo. Si encuentra que tal es el caso, el Ingeniero notificará al Contratista por escrito. Dentro de las cuarenta y ocho (48) horas de haber recibido tal notificación, el Contratista deberá mostrar al Ingeniero, evidencia concluyente de que ha hecho los arreglos para reparar los daños a satisfacción del propietario. Si no cumpliera el Contratista dentro de ese plazo, el Ingeniero podrá llevar a cabo las reparaciones a satisfacción del propietario y podrá deducir los costos resultantes de sumas que se le deban o se le lleguen a deber al Contratista. Si tales costos excedieran al monto de los pagos pendientes o a los que se le llegue a deber al Contratista, éste pagará la diferencia dentro de un plazo de SIETE (7) días después de recibido el cobro.

2.1.5.16. Sección 108.19: Protección de Bosques, Parques, Terrenos y Propiedades Públicas

Al llevar a efecto trabajo dentro de bosques, parques nacionales, parques municipales y de otras tierras públicas o en zonas adyacentes a los mismos, el Contratista deberá cumplir con todas las regulaciones de MARENA, MAG-FOR, municipalidades y toda otra autoridad que tenga jurisdicción en la protección de bosques y parques y en la ejecución de tales trabajos, y observará las leyes, normas y regulaciones sanitarias establecidas para tales zonas de reserva. El Contratista mantendrá esas áreas en condiciones ordenadas, eliminará todos los desperdicios, obtendrá permisos para la construcción y mantenimiento de todos los campamentos, almacenes, bodegas, residencias, letrinas, tanques sépticos y otras estructuras a ser usadas en el Proyecto, de acuerdo con los requerimientos de las autoridades competentes.

Incendios.- La protección contra incendios recibirá especial atención, tal como se establece a continuación:

1.- Regulaciones Contra Incendios.- El Contratista acatará todas las reglas e instrucciones relativas a la prevención y control de incendios y a las fechas y lugares en que se permite quemar, emitidas por el MAG-FOR o por MARENA. El Contratista tomará todas las precauciones para impedir que sus empleados enciendan fuegos innecesarios en la construcción del Proyecto y será responsable del escape de fuegos provocados en trabajos del Proyecto, así como de extinguir los incendios que se produzcan.

El Contratista deberá instalar y mantener durante el período de las operaciones contractuales, pararrayos satisfactorios en todos los motores a vapor, motores de combustión interna, en todas las chimeneas usadas en sus operaciones y en los campamentos. Además, deberá mantener extinguidores adecuados y una brigada de apagafuegos en las vecindades de aquellas operaciones que conlleven el riesgo de incendios.

2.- Guardafuegos.- Si lo requieren las CEC, el Contratista deberá emplear a unos guardafuegos entrenados que sea aceptable al Ingeniero. El guardafuego deberá poner en efecto todas las instrucciones recibidas del Ingeniero y será de su responsabilidad la aplicación de todas las regulaciones y estipulaciones del Contratante, del MARENA, del MAG-FOR, la DGBN y autoridades locales competentes. Será suya la responsabilidad de proteger de incendios el área afectada por las operaciones del Contratista y de vigilar que el Contratista y sus empleados cumplan con todas las regulaciones y estipulaciones relativas a la prevención contra incendios.

El guardafuego deberá contar con transporte adecuado para su uso exclusivo.

3.- Equipo Requerido para Combatir Incendios.- El Contratista deberá suministrar y mantener, a sus expensas, en el sitio de las obras, el equipo y herramientas adecuados para combatir incendios que exijan la DGBN y las autoridades que tengan jurisdicción en el área del Proyecto.

4.- Regulaciones sobre la Quema.- Si estuviera permitido en el Proyecto, antes de empezar una operación de quema, el Contratista deberá notificar al MAG-FOR, al MARENA, a la DGBN y a la municipalidad correspondiente. Durante las operaciones de quema deberá tener cuidados especiales de no chamuscar o dañar los árboles y arbustos cercanos al Derecho de Vía o áreas de servicio en que esta operación sea necesaria.

La acumulación de materiales a ser quemados serán de tal tamaño y colocados de tal manera, que durante la quema no se produzcan daños en objetos cercanos. La decisión en cuanto al tamaño máximo de seguridad de tales acumulaciones, la tomará el funcionario de la dependencia gubernamental que tenga jurisdicción, (MAG-FOR, MARENA, DGBN, municipalidad) y las instrucciones relativas a esto serán dadas al Contratista a través del Ingeniero. En defecto de alguna autoridad con jurisdicción sobre estos asuntos, la decisión será tomada por el Ingeniero.

La quema deberá ser suspendida cuando lo ordene la dependencia gubernamental que tenga jurisdicción o el Ingeniero y los rescoldos encendidos no deberán quedar desatendidos.

5.- Responsabilidad del Contratista en la Extinción de sus Propios Incendios.- El Contratista, bajo la dirección de la dependencia gubernamental competente, o en la ausencia de un funcionario de tal dependencia, actuando independientemente, deberá combatir, sin costo adicional para el Contratante, todos los incendios que se produzcan en el Proyecto o en sus vecindades, iniciados o causados por él o sus empleados, directa o indirectamente, como resultado de las operaciones de construcción. El Contratista podrá ser demandado por todos los daños resultantes de estos incendios ante la Delegación del MAG-FOR, MARENA, local o regional.

En el caso en que el Contratista es responsable de extinguir incendios sin costo adicional para el Contratante, según el párrafo anterior, si el número y capacidad del personal, equipo y materiales que el Contratista está en posibilidad de proveer prontamente para el combate del fuego, resultaran inadecuados para ese propósito, a juicio de la dependencia gubernamental o persona responsable de la extinción de incendios en el área, el funcionario de dicha dependencia o entidad, estará autorizado para proveer, a costas del Contratista, el personal, equipo y materiales adicionales y a hacer uso de las facilidades de transporte que él crea necesarias para la extinción del incendio.

6.- Recursos del Contratista para Extinguir otros Incendios.- Cuando sea requerido por la dependencia gubernamental con jurisdicción, o el Cuerpo de Bomberos local, el Contratista si lo estima conveniente pondrá los recursos que estime para extinguir incendios en las vecindades del Proyecto, que no sean los descritos en el párrafo 108.19 inciso (5). Es entendido que el Contratista recibirá compensación por tales servicios por parte de la dependencia gubernamental o Cuerpo de Bomberos que los haya solicitado, a los precios establecidos en el contrato para los recursos aplicados considerando los mismos como trabajos por administración. La extinción de los incendios será dirigida por la dependencia gubernamental o Cuerpo de Bomberos que haya solicitado la ayuda.

Todo reclamo por daños sufridos por los trabajadores en la extinción de incendios de esta naturaleza, que no estén cubiertos por los seguros exigidos bajo el Contrato, u otros daños resultantes de dichos siniestros, deberán ser reembolsados al contratista por la dependencia gubernamental, Cuerpo Bombero o entidad que haya solicitado la ayuda.

2.1.5.17. Sección 108.20: Seguros

(a) El Contratista dejará a salvo la responsabilidad del Contratante, sus funcionarios y empleados y de los supervisores, contra demandas, acciones o reclamos de cualquier índole surgidos a causa de daños y perjuicios recibidos por cualquier persona, o propiedad por razón de las operaciones del Contratista, o como consecuencia de algún descuido en el trabajo o el uso de materiales inaceptables en la construcción de las obras; o bien, por cualquier acto u omisión, descuido o mala dirección de dicho Contratista, o por causa de cualquier reclamo o sumas a pagar por violación de patentes, marcas de fábrica o derechos de autor; o de reclamos o sumas a pagar al amparo de leyes laborales, ordenanzas o decretos.

(b) Si fuera necesario, del dinero que se deba o llegue a deber al Contratista, se podrá retener para uso del Contratante, el monto requerido para cubrir estas responsabilidades. En caso de que no se le deba nada, será su garante quien deberá responder para que tales demandas, acciones o reclamos por los daños y perjuicios antes mencionados, sean satisfechos y liquidados, de lo cual se presentará suficiente evidencia al Contratante; sin embargo, no se retendrá ninguna suma cuando el Contratista presente evidencia satisfactoria de que está adecuadamente protegido por medio de seguros por daños a terceras personas, incluyendo muerte de sus trabajadores o de cualquiera otra persona, en su área de trabajo, daños a la propiedad de terceros y daños en la propiedad del Contratante y en la del Contratista mismo, por causa directa o indirecta de sus operaciones en el Proyecto.

(c) El Contratista deberá suscribir, todos los seguros obligados por la reglamentación vigente, pero incluirá, como mínimo, los siguientes seguros:

c-1 Seguro contra Daños a Terceros.- Este seguro comprenderá los daños corporales y materiales que puedan ser provocados a terceros como consecuencia de la realización de los trabajos, así como durante el plazo de garantía.

La póliza de seguros debe especificar que el personal del Contratante, el Ingeniero y resto del personal de supervisión así como el de otras empresas que se encuentren en el sitio de la obra se contarán como terceros a efectos de este seguro de responsabilidad civil.

c-2 Seguro contra Accidentes de Trabajo.- El Contratista suscribirá todos los seguros requeridos por la reglamentación vigente, necesarios para cubrir accidentes de trabajo. El Contratista será responsable de que sus sub-contratistas también cumplan con esta obligación.

El Contratista cumplirá, además, con lo establecido por la legislación y reglamentación aplicables en su país de origen (si se trata de empresas extranjeras) en lo que respecta a su personal extranjero que trabaje en Nicaragua.

c-3 Seguro contra los Riesgos en el Sitio de las Obras.- El Contratista suscribirá de conformidad con la reglamentación aplicable, un seguro contra todo riesgo en el sitio de la obra. Dicho seguro contendrá las garantías más amplias y cubrirá, por lo tanto, todos los daños materiales que puedan sufrir todos los bienes incluidos en el Contrato, en particular los daños debidos a un defecto de confección, del material de construcción o de la ejecución. Este seguro también deberá proteger contra los daños materiales ocasionados por fenómenos naturales.

c-4 Seguro de Responsabilidad Profesional.- El Contratista, si lo requieren las CEC, deberá suscribir un seguro de responsabilidad profesional, cuando haya trabajos que exijan la participación de profesionales de la ingeniería en diseños eventuales de estructuras que requieran diseño estructural u otro tipo de especialistas (por ejemplo en hincadura de pilotes, uso de geotextiles o geomallas, expertos en voladuras, etc.), por el monto indicado en las CEC.

(d) Suscripción y Presentación de Pólizas.- Los seguros obligatorios y como mínimo, los seguros c-1, c-2, c-3 y c-4 que anteceden, deberán ser presentadas por el Contratista para la aprobación del Ingeniero y ser suscritos antes de iniciar cualquier trabajo.

Los seguros contra daños a terceros y accidentes de trabajo deberán permanecer vigentes hasta la recepción provisional de las obras objeto del Contrato. El seguro contra riesgos en el Sitio de la Obra deberá permanecer vigente por un período de doce (12) meses después de la recepción provisional de las mismas.

Todas estas pólizas contendrán una disposición que subordina su cancelación a un aviso previo de la compañía de seguros al Contratante.

En caso de que las obras no sean concluidas dentro del plazo especificado en las pólizas de seguros originales, éstas serán renovadas con suficiente anticipación a la fecha de su vencimiento por los mismos montos, bajo las mismas condiciones de las pólizas originales y por un plazo adicional suficiente para la terminación satisfactoria de las obras.

El Contratista entregará al Contratante copia certificada de todas las pólizas de seguros obtenidas de conformidad con las disposiciones del Contrato, incluyendo el seguro que cubre a toda su maquinaria e instalaciones, contra los riesgos de incendios, robos, accidentes, motines, huelgas, problemas laborales, daños maliciosos, terremotos, inundaciones o huracanes. Los seguros deberán ser emitidos por compañías nicaragüenses o que estén autorizadas para operar en Nicaragua.

2.1.5.18. Sección 108.22: Responsabilidad del Contratista con Respecto a la Obra

Mientras el Ingeniero no haya notificado por escrito al Contratista que el trabajo ha sido aceptado, excepto por lo dispuesto en los Artículos-106.17 y 108.12, el Contratista, lo tendrá a su cargo y cuidado y deberá tomar todas las precauciones contra daños y perjuicios que pueda producir en él la acción de los elementos o toda otra causa originada por la ejecución de la obra o la no realización de la misma. El Contratista, por su propia cuenta, y antes de la aceptación final, deberá reparar o restaurar todos los daños en cualquier parte de la obra producidos por causas como las aquí mencionadas, excepto los debidos a Fuerza Mayor.

Durante toda suspensión de los trabajos, que no sea motivada por incumplimiento del Contratista, el Contratista será responsable por la integridad del Proyecto y deberá tomar las precauciones que sean necesarias para evitarle daños, proveer el drenaje normal y levantar o colocar las estructuras provisionales, rótulos u otras medidas preventivas o de protección, a expensas del Contratante. Durante tal período de suspensión de los trabajos el Contratista mantendrá, adecuada y continuamente, en aceptables condiciones de crecimiento, toda cubierta vegetal viva (engramado, enzacatado, setos vivos, etc.) que haya sido plantada bajo el Contrato y deberá hacer todo lo necesario para protegerla contra daños. Todos los costos en que incurra el Contratista como resultado de la suspensión de las obras serán pagados por el contratante al contratista.

2.1.5.19. Sección 108.23: Responsabilidad del Contratista con Respecto a los Servicios Públicos

Cuando las operaciones del Contratista tengan lugar en terrenos cercanos a instalaciones de empresas de telégrafos, teléfonos, energía eléctrica, en las que un perjuicio podría redundar en gastos considerables, pérdidas o molestias, la obra deberá ser iniciada hasta que hayan sido hechos todos los arreglos necesarios para la protección de tales instalaciones.

El Contratista deberá cooperar con los propietarios de toda línea de transmisión, subterránea o aérea, en las operaciones de remoción y reinstalación, con el fin de que esas operaciones puedan avanzar de una manera razonable y que la duración del trabajo de reinstalación pueda ser reducida a un mínimo, sin que los servicios que prestan tales empresas lleguen a ser interrumpidos innecesariamente.

En el caso de interrupción en los servicios públicos, como resultado de alguna rotura accidental o de quedar la tubería al descubierto o sin apoyo, el Contratista deberá notificar, sin demora, a la empresa respectiva y también cooperar con ella en el restablecimiento del servicio.

En caso de que fuesen interrumpidos servicios públicos, el trabajo de reparación será continuo hasta que se restablezca el servicio. No se emprenderá ninguna obra alrededor de hidrantes contra incendios, hasta que hayan sido aprobadas por el Cuerpo de Bomberos las medidas tomadas para mantener la continuidad del servicio.

Los daños inevitables causados sin descuido por parte del Contratista a servicios públicos subterráneos que no figuren en los planos, deberán ser reparados, si lo ordena el Ingeniero, y el pago correspondiente será hecho de acuerdo con el Artículo-110.06 de estas CGC.

2.1.5.20. Sección 108.24: Suministro del Derecho de Vía

El Contratante tendrá la responsabilidad de conseguir, con anticipación razonable al comienzo de la obra, el Derecho de Vía necesario para el emplazamiento de la obra, así como las servidumbres de paso, uso de terrenos, fuentes de agua, etc. requeridos para la ejecución de los trabajos, a menos que esté dispuesto de otra manera en las CEC.

2.1.5.21. Sección 108.25: Responsabilidad Personal de los Funcionarios Públicos en Proyectos del Sector Público

Al requerir el cumplimiento de lo estipulado en estas CGC, o en el ejercicio del poder o autoridad delegada en ellos por el Contrato o dentro de sus alcances, no recaerá ninguna responsabilidad ni como personas ni como funcionarios oficiales del Contratante, sobre el Contratante o el Ingeniero, ni sobre sus representantes autorizados, siendo entendido que en tales asuntos actúan únicamente como agentes y representantes del Gobierno.

2.1.5.22. Sección 108.27: Estadísticas sobre el Personal, el Equipo y las Transacciones – nóminas de pago

1.- El Contratista deberá mantener durante el curso del trabajo y conservar por cinco años más, registros de todo el personal que trabaja en el sitio de la obra. Tales registros deberán contener el nombre, dirección de cada empleado, su nacionalidad, su clasificación correcta y su salario, el detalle de las reservas para prestaciones sociales, así como de las prestaciones sociales hechas efectivas a cada uno.

Estos Registros de Personal deberán estar disponibles para su inspección por representantes autorizados del Contratante, a quienes será también permitido entrevistar a los trabajadores en horas hábiles de trabajo.

2.- A más tardar una semana después de cada pago, el Contratista enviará al Ingeniero una copia certificada de todas las Nóminas de Pago. El Contratista principal será responsable del envío de las copias certificadas de las Nóminas de Pago de todos los subcontratistas, si los hubiere. La certificación afirmará que las Nóminas son correctas y completas.

3.- El Contratista reportará diariamente al Ingeniero el número de horas trabajadas por cada una de sus unidades de equipo y las horas que dicho equipo no ha trabajado, indicando si el paro ha sido debido a reparación, mantenimiento u otras causas.

4.- El Contratista deberá establecer una contabilidad independiente y específica para el Proyecto, cuyos libros y registros serán llevados y mantenidos de conformidad con sanas prácticas de contabilidad generalmente aceptadas. Estos libros y registros deberán contener todas las transacciones hechas o relacionadas con el Contrato. El Contratante se reserva el derecho de auditarlos regularmente de conformidad con normas de auditoría establecidas y con la frecuencia que estime conveniente. Estos documentos serán mantenidos bajo resguardo por cinco años después del último desembolso efectuado.

2.1.5.23. Sección 108.28: Pago de mano de obra

Las Nóminas de Pago del personal del Contratista y los subcontratistas estarán igualmente disponibles en cualquier momento para inspección del Contratante.

El salario de los obreros y empleados será pagado en moneda legal de la República de Nicaragua. La forma de pago de los salarios se regirá por lo estipulado en el Código del Trabajo.

Ni el Contratista ni ninguno de sus agentes o representantes cobrará o aceptará remuneración de ninguna persona como condición para conseguir empleo en el Proyecto.

El Contratista no deberá exigir a sus empleados el suministro o costo de las herramientas usadas en la ejecución de su trabajo, excepto por pérdidas o daños razonablemente evitables.

Ninguna persona podrá ser empleada para trabajar en las obras bajo este Contrato, si no es con base en un salario, pero esto no impedirá el alquiler de bestias de carga, camiones y otros equipos. Ningún convenio de alquiler de esta naturaleza o gastos por alimentación, combustible, suministros o reparaciones a cuenta del mismo, dará lugar a deducciones en los salarios acumulados de cualquier empleado, excepto en la forma autorizada por las regulaciones antes citadas.

2.1.5.24. Sección 108.29: Alojamiento y Comida

El Contratista deberá suplir el alojamiento y facilidades donde pueda obtener alimentación todo personal del Proyecto que no sea de la localidad. A los trabajadores que

vivan en la localidad, el Contratista no estará obligado a suplirles estos servicios, pero sí a proveerles el transporte desde sus casas hasta el centro de trabajo y regreso.

Se consideran trabajadores de la localidad, a los que vivan dentro de un radio de 10 kilómetros de distancia del centro de operaciones del Contratista.

Cualquier empleado de los trabajos previstos en este Contrato podrá alojarse, alimentarse y comprar o negociar donde y con quien él elija. Ni el Contratista ni sus agentes ni sus empleados, podrán establecer, directa o indirectamente, como condición para trabajar, que el trabajador deba alojarse, alimentarse, comprar o negociar en un lugar o con una persona determinada.

Ni el Contratista ni sus agentes cobrarán a los empleados de su compañía por cualquier servicio de transporte que les suministraren.

El Contratista conviene en incluir estas condiciones en todos sus subcontratos.

2.1.5.25. Sección 108.30: Reclamos a Favor de Terceras Personas

Queda específicamente convenido entre las partes contratantes, que no hay intención en ninguna parte del Contrato de constituir al público ni a ningún miembro de éste en tercera parte que se beneficie de sus disposiciones, como tampoco de autorizar a nadie que no sea una de las partes signatarias del Contrato, a presentar y enderezar una reclamación por lesiones personales o por daños en propiedad ajena, de acuerdo con las condiciones o estipulaciones en él contenidas.

2.1.5.26. Sección 108.31: Protección Ambiental

El Contratista deberá cumplir con todas la leyes, decretos, reglamentos, sentencias judiciales y regulaciones locales relativas a la protección del Medio Ambiente y los Recursos Naturales en vigencia, en particular, con la Ley General del Medio Ambiente y los Recursos Naturales y su Reglamento, así como las normas y guías ambientales que sobre el particular promulguen o autoricen el MARENA, el MTI o ambos. El Permiso Ambiental que obtenga el Contratante indicará aspectos generales y específicos sobre los cuales deberá el Contratista tomar medidas preventivas o de mitigación.

El Contratante indicará en los planos, en las CEC o en ambos, las medidas de protección ambiental particularmente aplicables al Proyecto, de acuerdo con la clase de camino, calle o puente, características naturales, alcance del trabajo, longitud de Proyecto y costo de las obras.

Las NABCV, emitidas por el MTI, proveen información suficiente para cubrir la gama de medidas de prevención y protección del Medio Ambiente en los Proyectos Viales construidos con base en las Especificaciones Generales NIC-2000, como de mitigación de los efectos negativos que las construcciones viales puedan tener sobre el entorno natural. Estos documentos forman parte de los DLC. (Artículo-103.03, Sección VI, 3)

A su vez, estas CGC contienen estipulaciones generales y especiales sobre la Protección Ambiental que el Contratista estará obligado a cumplir durante el desarrollo de sus operaciones constructivas, parte de las cuales ya han sido señaladas en algunos artículos anteriores de esta Sección.

En las Divisiones II y III de las Especificaciones Técnicas, aparecen, además de los detalles para la construcción de las obras viales, **las medidas de protección ambiental y las obras** que serían construidas si aparecen en el Pliego de Licitación, en los planos o son ordenadas por el Ingeniero.

Las medidas fundamentales son las siguientes:

1.- Control de la Contaminación del Aire.-

1.1) Mantenimiento de los motores de la maquinaria de construcción en condiciones mecánicas tales, que se disminuyan al mínimo las emisiones de monóxido de carbono e hidrocarburos. Estas emisiones deberán ser controladas, además, vigilando el estado mecánico y de las prácticas de manejo del equipo motorizado, evitando aceleraciones frecuentes o innecesarias y estableciendo una velocidad promedio óptima para la conducción del mismo;

1.2) Eliminar, en todo lo posible, la práctica de quemar los residuos vegetales provenientes del Abra y Destronque del Derecho de Vía, de los bancos de préstamo, de las áreas para campamentos, etc., a menos que las condiciones en el Sitio de la Obra lo permitan, a criterio del MTI o MARENA.

1.4) Evitar, en todo lo posible, la formación de polvo en las operaciones de excavación y terraplenado por medio de riegos de agua en el material aflojado mediante el uso de paliativos contra el polvo;

1.5) Estabilizar los caminos de acarreo por medio de riego de agua o de paliativos contra el polvo;

1.6) Cumplir con las leyes y reglamentos aplicables al uso y manejo de solventes, incluyendo la fracción solvente de las pinturas, diluyentes, compuestos de curado de concreto y asfaltos rebajados usados en las obras.

Estas disposiciones serán de aplicación más estricta cuando la obra en construcción sea urbana o esté muy cercana a núcleos de población.

2.- Contaminación del Agua.-

El Contratista pondrá en práctica todas las precauciones necesarias para proteger las corrientes de agua, lagos, lagunas, estanques, humedales, bahías y aguas costeras, de la contaminación con combustibles, aceites, productos bituminosos, cloruro de calcio y otros materiales dañinos, y conducirá y programará sus operaciones de manera tal que se reduzcan al mínimo la sedimentación de tales masas acuáticas. Asimismo, tendrá sumo cuidado en la preservación de toda la vegetación existente en las zonas aledañas a la vía más allá de los límites de la construcción.

La intención del trabajo de control de la contaminación del agua es la de prevenir, controlar o atenuar la contaminación del agua de las corrientes, vías acuáticas y otras masas de agua, y consistirá en la construcción de aquellas obras necesarias que con tal objeto aparezcan en los planos o sean mencionadas en estas CGC o en las CEC o que sean ordenadas por el Ingeniero.

A fin de procurar un control efectivo y continuo de la contaminación del agua, puede ser necesario que el Contratista ejecute la obra bajo Contrato en unidades pequeñas o en unidades múltiples construidas en forma desfasada y con modificaciones en los procedimientos constructivos. El Contratista proveerá medidas provisionales de control de la contaminación, entre ellas, diques, estanques, zanjas, aplicación de paja y semilla de gramíneas, etc., las cuales se hacen necesarias como resultado de sus operaciones. El Contratista coordinará las obras de control de la contaminación del agua con cualquier otro trabajo que esté siendo realizado en el Proyecto.

Antes de iniciar los trabajos en el Proyecto, el Contratista someterá a la aprobación del Ingeniero, un programa para el control efectivo de la contaminación del agua. Este programa deberá mostrar el cronograma de la puesta en marcha de los trabajos de control de la erosión que aparezcan incluidos en el Contrato y de todas las medidas de control de la contaminación del agua que el Contratista propone tomar en relación con la construcción del Proyecto. Su propósito es minimizar los efectos de sus operaciones en las cercanías de corrientes y otras masas de agua. El Contratista no podrá iniciar operaciones de abra y destronque ni de movimiento de tierras, mientras tal programa no haya sido aprobado. Asimismo, el Contratista deberá poner al día el mencionado programa en cualquier oportunidad que el Ingeniero lo solicite por escrito.

El Ingeniero notificará al Contratista la aceptación o rechazo del programa de control de contaminación del agua, en no más de cinco (5) días después de sometido. En caso de rechazo el Contratista no será responsable por el rechazo de todo o parte de un programa, pero deberá hacerle los ajustes para obtener su aprobación.

El Contratista podrá solicitar al Ingeniero obviar el requerimiento de someter por escrito un programa de control de la contaminación del agua, cuando la naturaleza de las operaciones sea tal que dicha contaminación sea muy improbable; sin embargo, la dispensa de este requisito no relevará al Contratista de la responsabilidad sobre el cumplimiento con los demás requisitos de esta sección. Igualmente esta dispensa no obstará para que, en toda oportunidad durante la ejecución de las obras bajo contrato, el Ingeniero pueda exigir la presentación de un programa de esa naturaleza, si lo considera necesario en vista de las operaciones que esté realizando el Contratista.

A menos que las CEC lo dispusieran de otra manera o lo ordenara por escrito el Ingeniero, el Contratista no deberá eliminar la corteza vegetal de un área de material térreo erosionable que exceda de diez (10) hectáreas por cada frente de trabajo, que pueda provocar la contaminación de aguas vecinas, si antes no ha tomado todas las medidas provisionales o permanentes de control de la erosión.

Donde los materiales erosionados puedan contaminar el agua, las operaciones del Contratista deberán ser programadas de tal manera que las obras permanentes para control de la erosión sean instaladas simultáneamente con el movimiento de tierras o inmediatamente después de concluido éste.

Los bancos de préstamo serán explotados de tal manera que los materiales que resulten erosionados no lleguen a contaminar las aguas. El yacimiento deberá ser conformado y acabado, en todo lo posible, de manera que el agua no se colecte o estanque en ellos, a menos que el Propietario del área solicite el aprovechamiento de las depresiones para la

construcción de lagunas para la cría de peces o que, de conformidad con normas del Contratante, éstas puedan servir para actividades de esparcimiento. La corteza vegetal deberá ser removida y almacenada fuera de los límites de los bancos para ser utilizada después en la restauración de los sitios de donde fue extraída. Después de que un banco de préstamo deje de ser explotado, todo material sobrante temporalmente almacenado fuera de él, deberá ser devuelto a su lugar de origen, donde será conformado de acuerdo a la topografía del sitio, con taludes suaves y seguros para las personas y los animales y propicios para el crecimiento de la vegetación.

En general, el Contratista atenderá a las siguientes disposiciones:

2.1) Donde las áreas de trabajo estén cruzadas por corrientes de agua o estén cercanas a ellas, se deberán construir y mantener, entre las áreas de trabajo y las corrientes, barreras o diques adecuados para impedir que el lodo llegue a contaminar las corrientes. Durante la construcción de dichas barreras o diques se deberá reducir al mínimo el enlodamiento de las aguas;

2.2) La remoción de material del fondo de corrientes de agua, cuando sea permitida, no deberá ser iniciada hasta que se hayan provisto los medios adecuados, tales como canales de desviación, para conducir la corriente libre de lodo o limo alrededor de las operaciones de remoción;

2.3) El transporte de materiales a través de corrientes de agua, deberá ser realizado sin enlodar las aguas. No se deberá operar equipo mecanizado en los cauces de corrientes de agua, excepto en los casos en que sea necesario para construir cruces o barreras y rellenos en los cambios de canal. El número de cruces de corrientes de agua por equipo de construcción deberá ser reducido al mínimo;

2.4) El agua de lavado de agregados que contengan lodo o limo, deberá ser tratada por filtración o retención en vasos de sedimentación, o en estanques adecuados, para impedir que el agua lodosa contamine las corrientes;

2.5) A las sustancias aceitosas o grasosas que se originen en las operaciones del Contratista, no se les permitirá que entren o sean depositadas en lugares de donde, más tarde, puedan descargar en corrientes de agua o infiltrarse en el suelo para contaminar las aguas subterráneas;

2.6) No se permitirá que el cemento Portland o concreto fresco de cemento Portland entre en las corrientes de agua. Este requerimiento exigirá controles estrictos en las operaciones de construcción de puentes, cajas y alcantarillas;

2.7) Una vez que las operaciones de construcción hayan terminado, toda corriente de agua que hubiese sido desviada, deberá ser devuelta a su cauce original, respetando, en todo lo posible, sus meandros y pendientes, a fin de no provocar posibles problemas futuros de erosión de riberas o cambios en los patrones naturales de drenaje.

2.8) El material sobrante derivado de la construcción de las obras viales, no deberá ser depositado en los cauces de corrientes de agua de donde podría ser arrastrado por las aguas durante las crecidas o por el flujo natural del río.

2.9) Donde exista la posibilidad de migración de peces anádromos en corrientes afectadas por la construcción de las obras bajo contrato, el Contratista deberá conducir sus operaciones de tal manera que haya pasada para dichos peces migratorios;

2.10) Antes de toda suspensión de las operaciones de construcción durante un período apreciable de tiempo, el Contratista deberá conformar la parte superior de las obras de terracería y darles cierto grado de compactación, y pendiente tal que permita el escurrimiento del agua de lluvia con un mínimo de erosión;

2.11) Mientras no estén construidas y en operación las estructuras de drenaje permanente ni las de control de la erosión, el Contratista deberá proveer y mantener o tomará las medidas preventivas provisionales que sean necesarias para controlar la erosión y la sedimentación, tales como bermas, diques, pretiles, zanjas de intercepción, etc.;

2.12) Las instalaciones sanitarias que el Contratista construya en campamentos y áreas de trabajo, además de llenar todos los requisitos en cuanto al diseño, quedarán ubicadas en lugares tales que no se produzca contaminación de pozos, corrientes, aguas subterráneas u otras masas de agua;

2.13) El Contratista deberá cumplir con todas las leyes, reglamentos y disposiciones del MTI, MINSA, MAG-FOR, del MARENA y de cualquier otra dependencia gubernamental que tenga autoridad para controlar el uso de pesticidas. Se considerarán incluidos dentro de este término, a todos los herbicidas, insecticidas, fungicidas, rodenticidas, germicidas, nematocidas, bactericidas, inhibidores, fumigantes, defoliantes, desecantes, esterilizadores de suelo y repelentes. En general, toda sustancia o mezcla de sustancias destinada a prevenir, repeler,

controlar o destruir hierbas malas, insectos, enfermedades, roedores o nematodos y cualquier sustancia o mezcla de sustancias destinadas a ser usadas como reguladores, defoliadores o desecadores de plantas, serán consideradas como pesticidas.

3.- Control del Ruido.-

El Contratista deberá establecer una reglamentación y control de todas las operaciones de su equipo moto propulsado, motores estacionarios, plantas eléctricas, trituradoras, plantas de concreto o de mezcla asfáltica, hincadura de pilotes, voladuras de roca con explosivos, perforación de roca, rotura mecánica de pavimentos y, en general, de toda operación que produzca ruido extraordinario que represente una molestia y una amenaza para la tranquilidad y salud de los trabajadores y de los residentes en áreas cercanas. Este requerimiento adquiere gran importancia en trabajos urbanos o semiurbanos o en zonas con núcleos poblacionales de alguna consideración. Las medidas a tomar varían, según las circunstancias. Entre ellas están la introducción de cambios en la secuencia de operaciones para evitar la simultaneidad, supresión de trabajo nocturno, uso de equipo especial, aplicación de técnicas especiales a las voladuras de roca con explosivos, uso intensivo de mano de obra, etc.

4.- Revisión Ambiental de Áreas para Bancos de Préstamo y Botaderos de Desechos Propuestos por el Contratista.- Las áreas propuestas por el Contratista para bancos de préstamo, botaderos de residuos y áreas de usos varios, antes de poder ser usadas, deberán ser aprobadas por el Ingeniero previa revisión ambiental de las mismas. (Las áreas de usos varios incluyen caminos de acceso, desvíos, retornos, sitios para plantas de trituración o para fabricar concreto de cemento o concreto asfáltico, áreas de acopio, polvorines, patios de estacionamiento de equipo, gasolineras, etc.).

El Ingeniero iniciará los levantamientos de reconocimiento de recursos culturales y biológicos del sitio, sin costo para el Contratista. Si el área propuesta está dentro de 45 metros del Derecho de Vía del Proyecto, el Contratista agregará a su solicitud escrita, un mapa topográfico.

d) Áreas de Bosque, Praderas y Sabanas.- Si los resultados del levantamiento de reconocimiento de recursos biológicos indicaran que las áreas de bosque, praderas o sabanas podrían ser negativamente afectadas por el área para banco de préstamo, área de usos varios o de desechos propuesta, el Ingeniero recomendará al Contratista minimizar el daño a tales áreas mediante la selección de sitios alternativos, cuando esto sea práctico, o mediante la reforestación de reemplazo de árboles o de vegetación de pradera, según sea aprobado. Tal reforestación o revegetación para áreas de bancos de préstamo, área de usos varios o de desecho, podrán ser recomendadas previa aprobación del Propietario del terreno o dentro del Derecho de Vía de la carretera.

5.- Tratamiento General de los Bancos de Préstamo, Áreas de Usos Varios de Desecho.- (Ver Artículo-108.17, Sección-201, Sección-915 y Sección-916).

5.1) Los bancos de préstamo, las áreas de usos varios o de desecho deberían ser escogidos al inicio de la construcción, si no están mostrados en los planos o descritos en las CEC. Su localización debería ser preferiblemente, en lugares que no sean visibles desde el camino ya terminado. Su explotación debería ser hecha de tal manera que la excavación se integre armoniosamente al paisaje circundante. Las áreas que hayan sufrido remoción de material deberán ser reconformadas y resembradas con vegetación autóctona para asegurar buen control de la erosión y mejorar condiciones indeseables o antiestéticas. También, se deberá proveer espacio adecuado para permitir la conservación de cualquier pantalla vegetal o permitir su siembra.

5.2) Localización en tal forma que el área no quede por debajo del nivel de la vista de los conductores ni en lugares expuestos de manera que se dificulte la siembra de pantallas vegetales.

5.3) Los troncos, raíces y materiales de mal aspecto deberán quedar cubiertos cuando estén en áreas expuestas a ser vistas desde el camino.

5.4) Los bancos de préstamo, áreas de usos varios o de desecho que queden expuestos, deberán ser conformados y fertilizados para que crezca vegetación.

5.5) Los caminos de acceso o de acarreo no deberán quedar localizados a un ángulo que los haga visibles al tráfico sino que, por el contrario, en ángulo recto con la dirección del tráfico o a un ángulo de visibilidad en dirección opuesta a la del tráfico.

5.6) No se debe colocar tierra indiscriminadamente alrededor de los árboles ya que puede dañárseles o secarlos durante la vida del contrato o después de la aceptación del trabajo por parte del Contratante.

5.7) El material sobrante debe ser colocado en las área de desecho (“botaderos”) aprobadas por el Ingeniero en forma que no interfiera con el drenaje superficial, lo cual puede

causar inundaciones y éstas pueden provocar la muerte de árboles existentes que se está queriendo conservar.

5.8) A todos los bancos de préstamo, áreas de usos varios o de desecho, se les construirán drenajes adecuados para que durante su explotación y al concluirla, se evite la formación de charcos de agua estancada que malogren el crecimiento de las plantas.

5.9) El material sobrante de las excavaciones será utilizado al máximo en el suavizado de los taludes de terraplenes o en el ensanchamiento de hombros.

5.10) Cuando se trate de bancos de préstamo nuevos, los suelos orgánicos existentes en la corteza deberán ser conservados acopiándolos apropiadamente para recubrir con ellos el banco y recuperar la vegetación autóctona.

5.11) Cuando su uso sea aprobado, se podrá extraer material de cauces de ríos y quebradas, manteniendo la pendiente natural del cauce y asegurando sus bordes contra el deslizamiento. No se permitirá la extracción de materiales con las máquinas dentro del curso de agua de los ríos, ni la extracción de materiales a distancias menores de 200 metros del centro de la vía al punto de extracción. Se requerirá que el Contratista obtenga de parte del MARENA, el Permiso Especial de extracción de bancos de materiales localizados en el fondo del cauce o riberas de ríos y quebradas.

5.12) En terrenos planos sujetos a estancamiento de aguas y de drenaje muy lento, el Contratista no podrá extraer materiales de préstamo.

5.13) El Contratista deberá botar o acumular los materiales sobrantes o inadecuados únicamente en los sitios aprobados por el Ingeniero, cuidando de no alterar el drenaje superficial o afectar de alguna manera los cultivos en los terrenos aledaños o el paisaje del lugar.

6.- Control de la Erosión.- Además de las medidas de Control de la Erosión que han sido señaladas a propósito de los controles de contaminación del agua y del tratamiento recomendado para Áreas de Bancos de Préstamo, Áreas de Usos Varios o de Desecho, y de otras medidas antes mencionadas en este Artículo, el Contratista tomará medidas especificas para evitar la erosión en todas las demás obras contratadas, incluyendo abra y destronque, movimiento de tierras, excavaciones varias, acarreo de materiales, obras de drenaje, puentes y capas superiores de la vía, aunque no aparezcan indicadas en los planos o especificaciones ni sean ordenadas por el Ingeniero, así como las que se muestren en dichos documentos u ordene el Ingeniero.

Entre tales medidas están las siguientes, sin carácter limitativo:

6.1) Medidas temporales o transitorias y medidas permanentes. Entre las primeras están el uso de barreras, estanques de sedimentación, diques de tierra, cortinas de precipitación o sedimentación de limo hechas con geosintéticos, desvíos de corrientes superficiales, etc.; entre las segundas están las aplicables al material erosionable expuesto a cualquier actividad asociada a las obras e incluidas en el Pliego de Licitación.

Las medidas temporales de control de la erosión deberán ser coordinadas con las medidas permanentes para asegurar un control de erosión económico, efectivo y continuo.

6.2) El Contratista preparará y someterá un plan de implementación del control de la erosión para el Proyecto, incluyendo los bancos de préstamo, las áreas de usos varios y las de desecho.

6.3) El uso de las áreas de tierra erosionable será objeto de la aprobación del Ingeniero y estarán expuestas el menor tiempo posible a la acción de los elementos después de ser aflojadas por las operaciones de destronque, excavación, préstamo o relleno, antes de la conformación, acabado y siembra finales o la aplicación de medidas temporales para control de la erosión.

Las operaciones de destronque y terraceado deberán ser realizadas en secuencia apropiada con otro trabajo a fin de minimizar la erosión. Las zanjas y diques de intercepción deberán ser construidos tan pronto como sea práctico después de que las operaciones de abra y destronque hayan sido completadas y antes o durante la excavación de los cortes. Cuando sea previsible que la erosión vaya a constituir un problema, se deberá seguir con las medidas permanentes de control de la erosión inmediatamente después de las operaciones de terraceado, si lo permiten las condiciones, a menos que el Ingeniero autorice medidas temporales de control de la erosión.

6.4) Cuando haya que revegetar las áreas afectadas por obras de rehabilitación de la vía, se hará, de ser posible, al inicio de las primeras lluvias, para evitar al máximo la erosión.

6.5) El Contratista evitará la eliminación innecesaria de la vegetación en las áreas del Derecho de Vía situadas fuera del prisma de la vía. El Contratista deberá recuperar, en todo caso, la cobertura edáfica superficial. Cuando se disponga de suelos orgánicos en cantidad

suficiente y lo ordene el Ingeniero, el Contratista aplicará una capa sobre las zonas del Derecho de Vía no protegidas o se usará en el tratamiento de los taludes de corte o de terraplén.

6.6) El Contratista evitará compactar los suelos fuera del prisma de la carretera en aquellas zonas donde se pueda favorecer el resurgimiento de las diferentes especies vegetales.

7.- Compensación.- El cumplimiento con los requerimientos de protección ambiental no relevará en forma alguna al Contratista de su responsabilidad de cumplir con todas las otras disposiciones del Contrato, en particular, con las relativas a su responsabilidad por daños y preservación de la propiedad.

Todo trabajo requerido para proteger el ambiente, ejecutado de acuerdo con el programa aceptado, que no esté de otra manera requerido en el

Contrato (Pliego de Licitación) y que sea ordenado por el Ingeniero, será pagado al Contratista en la forma siguiente:

7.1) Aquellas obras de protección y control que puedan ser construidas bajo los varios conceptos de pago existentes en el Contrato, serán medidas y pagadas de conformidad con los precios contractuales correspondientes.

7.2) Aquellas obras de protección y control no cubiertas por conceptos de pago, serán pagadas como **Trabajo Extra** de acuerdo con el Artículo-105.03 de estas CGC.

Fuera de lo dispuesto en los incisos (7.1) y (7.2) que anteceden, la compensación total al Contratista por satisfacer todos los requerimientos de este Artículo, será considerada como incluida en los precios pagados por los varios conceptos de obra bajo contrato y no habrá compensación adicional alguna.

2.1.6. SECCIÓN 109: EJECUCIÓN Y AVANCE DEL TRABAJO

2.1.6.1. Sección 109.01: Subcontratos

El Contratista dedicará su atención personal al cumplimiento del Contrato y mantendrá todas las actividades bajo su control.

Ningún subcontratista será reconocido como tal, y todas las personas que estén a cargo de algún trabajo de construcción serán consideradas como empleadas del Contratista y éste será tenido como responsable por el trabajo que ellos realicen, el cual estará sujeto a las estipulaciones del Contrato y las especificaciones.

El Contratista deberá ejecutar con su propia organización obras contractuales por un valor no menor del 50 por ciento del Valor Original del Contrato.

Cuando es subcontratado un concepto total de obra, por ejemplo, puentes, el valor total del trabajo subcontratado será computado usando los precios unitarios contractuales involucrados. Cuando el trabajo subcontratado solo es una parte de cierto grupo de conceptos de obra, el avalúo del trabajo subcontratado será basado en un porcentaje estimado del valor de licitación, computado con la información suministrada por el Contratista, sujeto a la aprobación del Ingeniero.

Si existen dentro de los trabajos contratados algunos que involucren el trabajo de especialistas y que no puedan ser ejecutados por personal del Contratista, el valor de tales trabajos, que serán conocidos como "Trabajos de Especialidades", podrá ser deducido del Valor Total Original del Contrato, antes de calcular el monto mínimo de obras que le será requerido al Contratista construir su propia organización.

Todo contrato, a ser firmado entre el Contratista y un subcontratista, deberá contar con la previa aprobación de la UCP del Contratante; para ello, el Contratista, si no lo ha hecho dentro del contenido de su oferta, presentará pruebas manifiestas de la capacidad de ejecución del subcontratista, incluyendo constancias de entrega satisfactoria de trabajos similares a los subcontratados. Sin embargo, la aprobación de la UCP del Contratante, no relevará al Contratista de su responsabilidad sobre el total de la obra y las garantías exigidas.

Ningún subcontrato, aprobación de subcontrato ni cualquier otra acción relacionada con subcontratos, creará relación contractual alguna entre los subcontratistas y el Contratante. El Contratista, en todo caso, tendrá plena responsabilidad y todas las obligaciones por las acciones u omisiones de sus subcontratistas. El Contratante considerará como un hecho que el Contratista y sus subcontratistas comparten el conocimiento directo, atribuido o presunto, que otros pudiesen tener de todo lo relacionado con el Contrato.

2.1.6.2. Sección 109.02: Orden de inicio

La orden de iniciar los trabajos será emitida por el Ingeniero previa entrega del Anticipo, y del sitio de las obras sin restricciones. En dicha orden será indicada la fecha en que se espera que el Contratista inicie los trabajos. A partir de esa fecha se comenzará a contar el

tiempo contractual. El Contratista a su opinión podrá iniciar los trabajos previa autorización del Contratante, sin que cuente el plazo contractual.

Si el Contratista iniciara cualquier trabajo del Proyecto antes de la emisión de la Orden de Inicio, tales como movilización de equipo y trabajadores o suministro de materiales, el tiempo contractual comenzará igualmente a ser contado a partir de la fecha estipulada en la Orden de Inicio.

2.1.6.3. Sección 109.03: Reunión de Preconstrucción

Después de firmado el Contrato y antes de emitir la Orden de Inicio, el Ingeniero citará por escrito al Contratista a la Reunión de Preconstrucción, con indicación del lugar, fecha y hora y a la cual asistirán, además, representantes del Contratante.

El propósito de dicha reunión es el de discutir los planos y especificaciones del Proyecto, condiciones muy especiales existentes en el campo, el programa y plan de ejecución propuestos por el Contratista, tipo, cantidad y ubicación del equipo propuesto, relación de documentos contractuales, fuentes y requerimientos de personal, programa de mantenimiento del tráfico, seguridad del público y los trabajadores, canales de comunicación y cualquier otro tópico que el Contratante o el Contratista considere conveniente discutir para un mejor entendimiento entre ambas partes. Los acuerdos a que se llegue en la Reunión de Preconstrucción se asentarán en un documento escrito y se le dará el carácter de Addendum, el cual de esta manera pasará a formar parte del Contrato.

Programa de Trabajo.- Durante la Reunión de Preconstrucción, el Contratista presentará al Ingeniero un Programa de Trabajo, incluidas las obras de Protección Ambiental, que muestre la Ruta Crítica de la programación y los detalles de la ejecución de las diferentes actividades, tales como el equipo y otros recursos disponibles, incluyendo personal e imprevistos necesarios para la realización de los trabajos, y el número estimado de días de atraso por mal tiempo. El equipo que incluya como parte de los recursos para la ejecución del Proyecto, deberá ser fácilmente identificable, indicando modelo, número de equipo y número de motor así como ubicación actual.

Dentro de los treinta (30) días de iniciados los trabajos, el Contratista deberá presentar un Programa de Trabajo Actualizado en que ya estén incorporados los ajustes previsibles. Este programa será usado como base para controlar el avance y desarrollo de la obra.

Si en el curso de la ejecución de las obras el Contratista se retrasara considerablemente en el cumplimiento del programa presentado, deberá entonces:

a) Presentar un programa revisado para la terminación de la obra dentro del plazo del Contrato, y

b) Modificar sus sistemas de trabajo para proporcionar adicionalmente los materiales, equipo y mano de obra que resulten indispensables para cumplir con los plazos señalados en el nuevo programa.

2.1.6.4. Sección 109.04: Limitación de las Operaciones

El Contratista deberá conducir las operaciones constructivas de tal manera y con tal secuencia que en todo momento la interferencia con el tráfico sea mínima. Deberá dar la debida consideración a la localización de los desvíos y a las disposiciones sobre la dirección del tráfico. No deberá comenzar trabajos en perjuicio o detrimento de trabajos ya comenzados con anterioridad. El Ingeniero podrá exigir al Contratista que complete una sección de la obra en construcción, antes de iniciar los trabajos en cualquier otra sección, si la apertura de la que está en construcción fuese conveniente para el público.

Si los trabajos de construcción fuesen suspendidos por algún motivo, el Contratista deberá notificar al Ingeniero, cuando menos con 24 horas de anticipación, la reanudación de sus operaciones.

2.1.6.5. Sección 109.05: Condiciones del Personal.- Métodos y Equipo

El Contratista deberá en todo momento disponer de supervisión propia, trabajadores capaces y de equipo adecuado para llevar las varias clases de trabajos a su completa terminación de la manera y dentro del plazo requeridos por estas CGC.

1.- Condiciones del Personal.- Todo trabajo amparado por el Contrato, deberá ser ejecutado con destreza y de acuerdo con la práctica normalmente aceptada dentro de cada uno de los oficios involucrados en la obra; por tanto, todos los trabajadores deberán tener suficiente habilidad y experiencia para realizar adecuadamente las tareas para las que estén asignados.

Toda persona empleada por el Contratista, o por cualquiera, de sus subcontratistas, que, a juicio del Ingeniero, no efectúe su trabajo de una manera apropiada y hábil, o que no se comporte debidamente durante las horas de trabajo, deberá ser expulsada del Proyecto, si

lo ordena por escrito el Ingeniero. Tal persona no podrá ser empleada de nuevo en el mismo Proyecto, a menos que el Ingeniero lo autorice por escrito. Si el Contratista no acata la orden de expulsión o no emplea personal adecuado para una satisfactoria ejecución de los trabajos, el Ingeniero podrá suspender las operaciones por medio de notificación escrita (Directiva), hasta que se dé cumplimiento a su orden. El Contratista no tendrá derecho a extensión alguna en el Plazo del Contrato por causa de esta suspensión ni a reclamar ajustes por costos adicionales que resultaren de la misma. No se permitirá la contratación de Personal Clave de Dirección de la obra, mientras esté laborando en otro tramo del mismo Proyecto, y ese otro tramo esté a cargo de otro contratista.

2.- Condiciones del Equipo y Métodos de Construcción.- Todo el equipo usado en el trabajo deberá tener suficiente capacidad y estar en buenas condiciones mecánicas para satisfacer los requerimientos del trabajo y producir una obra acabada de calidad ordenada.

Cuando los métodos y equipos a ser usados en la construcción no estén prescritos en el Contrato, se le permitirá al Contratista usar cualesquier métodos y equipos que permitan realizar la obra de acuerdo con los planos y las especificaciones.

Cuando los planos o las especificaciones estipulan el uso de ciertos métodos y equipos, el Contratista deberá usarlos de conformidad, a menos que el Ingeniero autorice el uso de otros. Si el Contratista deseara usar métodos o tipos de equipo diferentes a los especificados, deberá solicitar la autorización al Ingeniero. La solicitud deberá ser hecha por escrito con una descripción detallada de los métodos y equipos propuestos y las razones para el cambio. Si el cambio es autorizado, será bajo la condición de que el Contratista será plenamente responsable de producir resultados que estén de acuerdo con todos los requerimientos. Si después de probar el uso de métodos o equipos alternativos, el Ingeniero determina que la obra producida no llena los requerimientos, el Contratista descontinuará el uso de los métodos y equipos alternativos y completará el trabajo restante haciendo uso de los métodos y equipos especificados. El Contratista deberá remover y reemplazar cualquier trabajo deficiente o tomar las medidas correctivas que ordene el Ingeniero. No habrá cambio en la base de pago para los varios conceptos de trabajo ni extensiones en el Plazo del Contrato, como resultado de la autorización dada por el Ingeniero para emplear métodos o equipos alternativos.

Independientemente del recurso prescrito en el Artículo 109.08 de estas CGC, si el Contratista no suministrara como mínimo el equipo ofertado, en cantidad suficiente y en condiciones de operación que garanticen la ejecución satisfactoria de la obra dentro del plazo estipulado en el Contrato, el Ingeniero podrá retener el pago del Estimado Mensual o suspender el trabajo, sin extender el Plazo del Contrato, hasta que tal equipo sea provisto.

Una vez que el Contratista haya provisto el equipo requerido, no podrá ser retirado del Proyecto sin la autorización escrita del Ingeniero.

Si por razones del origen de los fondos de financiamiento del Proyecto, las CEC estipularan que la adquisición de equipo deba llenar los requerimientos de la Fuente de Financiamiento, no será permitido el uso de equipo o accesorios que no hayan cumplido con tales exigencias. Este requerimiento deberá estar indicado en las CEC.

2.1.6.6. Sección 109.07: Determinación y Extensión del Plazo Contractual

El número de días acordados para la construcción de la obra será el indicado en la Oferta y el Contrato. Este plazo incluirá un cierto número de días, indicado en la Convocatoria o en las CEC, previsto para suspensiones del trabajo por causa de mal tiempo.

Durante la ejecución del Contrato, el Ingeniero podrá conceder ampliaciones del plazo por concepto de:

1.- Ampliaciones por Concepto de Aumento de Cantidades.- El plazo de entrega indicado en el Contrato, tienen su fundamento en las cantidades originales que se definieron en el Artículo-103.07. Si el cumplimiento satisfactorio del Contrato requiriese efectuar trabajos en mayores cantidades que las que se indicaron en la oferta, el Plazo del Contrato concedido originalmente podrá ser modificado en proporción a la cantidad del trabajo adicional, la dificultad de su ejecución y las disminuciones que puedan haber ocurrido en otros conceptos de trabajo.

En caso de que el Contratista encontrase imposible, por motivos fuera de su control, completar la obra dentro del plazo especificado en el Contrato o modificado de acuerdo con las disposiciones de este artículo, podrá en cualquier momento y por lo menos 30 días antes del vencimiento del plazo vigente del Contrato, presentar al Ingeniero un escrito solicitando la extensión del plazo, dando a conocer las razones y aportando las pruebas que, a su criterio, justifican la extensión solicitada. No será válido como justificación el argumento de que el plazo contractual era muy corto, ni será tomada en cuenta la solicitud que no cumpla con el tiempo mínimo definido para su presentación, o sea 30 días antes del vencimiento del plazo vigente.

Si el Ingeniero encontrase que la demora en el trabajo fue debida a condiciones fuera del control del Contratista, podrá ampliar el plazo hasta donde las circunstancias lo justifiquen. En este caso, la extensión del plazo deberá quedar por completo en vigor y efecto como si fuese el plazo original.

Solo serán consideradas en las extensiones del plazo aquellas demoras o modificaciones que afectan a las actividades críticas del Programa de Trabajo o que causen que ciertas actividades no críticas pasen a serlo. No se concederán extensiones de tiempo por demoras o modificaciones que hagan uso de las holguras disponibles en el tiempo de ejecución según aparezcan en la Lista de Actividades del Programa de Trabajo requerido como parte del Contrato.

Para solicitar una extensión en el Plazo de Ejecución, el Contratista citará los artículos y cláusulas aplicables del Contrato. La solicitud será por escrito y deberá incluir, por lo menos, lo siguiente:

a) Artículos y cláusulas del Contrato con base en las cuales se hace la solicitud.

b) Descripción narrativa detallada de las razones para reclamar el ajuste en el Plazo Contractual, incluyendo las siguientes:

1) Causa del atraso en el Plazo de Ejecución.

2) Fecha en que se inició el atraso.

3) Duración del atraso.

4) Actividades afectadas.

5) Métodos a ser empleados para compensar el atraso.

c) Sugerir una nueva fecha para completar la obra o indicar el número de días adicionales, soportados por los programas de construcciones originales y revisadas.

Toda extensión en el Plazo del Contrato será formalizada por medio de una Orden de Cambio en la cual se expondrán las razones que haya argumentado el Contratista y que el Ingeniero haya comprobado. Dicha Orden será firmada por el Contratista, el Ingeniero y el Director de la Unidad Ejecutora (o Coordinadora) del Proyecto, según corresponda.

Cuando la obra quede totalmente terminada y aceptada, cesará el cómputo diario del tiempo.

2.- Extensiones por Concepto de Lluvia.- El Contratista no tendrá derecho a reclamar aumento del Plazo Contractual a causa de suspensiones ordenadas u obligadas por concepto de lluvia, si el número de días de atraso está dentro del margen previsto para esa causa de demora. El Ingeniero podrá extender el plazo si comprueba, por medio de registros de precipitación y la Bitácora del Proyecto, que el tiempo lluvioso excedió al estimado en las CEC. Para los fines de una extensión de esta naturaleza, se considerará como día de lluvia aquél en que, por razones de la precipitación pluvial o de humedad de los materiales, haya necesidad de suspender el trabajo, por lo menos, del 60% del personal y equipo del Contratista, por más de cinco (5) horas normales de trabajo.

Durante el tiempo de suspensión en exceso sobre el estimado en las CEC, el Contratante reconocerá al Contratista los Costos de Posesión de la renta horaria del equipo de construcción ocioso por causa de la lluvia, de acuerdo con las rentas detalladas en la Oferta del Contratista, más la mano de obra y viáticos de los operadores del equipo inmovilizado.

2.1.6.7. Sección 109.07: Incumplimiento en la Terminación de la Obra Dentro del Plazo Contractual.- Indemnización por Demoras

En cumplimiento de las CGC, el Contratista indemnizará al Contratante los costos de daños y perjuicios por cada día de demora con relación al plazo actualizado de las obras, que se computará hasta la recepción sustancial de la obra. El monto total por daños será liquidado de conformidad con las sumas diarias indicadas en el cuadro 109-01, una suma igual y calculada de la misma manera entregara el Contratante al Contratista por cada día de entrega anticipada. Para efectos de la medición de la multa o premio se tomaran en cuenta en los atrasos que el contratante o sus agentes provoquen al contratista los que no contaran en el plazo:

CUADRO 109-1
Monto de la Indemnización por Daños y Perjuicios que Pagará el Contratista por Cada Día de Demora en la Terminación del Proyecto. O de Premio que pagará el Contratante al Contratista por cada día adelantado

Valor Original del Contrato (En Córdobas) *		Indemnización a Cobrar por Día Calendario de Demora (En Córdobas) *	
Desde más de	Hasta e Incluyendo	Si el Plazo está estipulado en Días Calendario o Fecha Tope	Si el Plazo está estipulado en Días de Trabajo
0	500,000	250	300
500,000	1,000,000	500	600
1,000,000	5,000,000	1750	2100
5,000,000	10,000,000	3000	3600
10,000,000	20,000,000	5000	600
20,000,000	50,000,000	10000	12000
Más de 50,000,000	----	0.02 por cien	0.024 por mil

La deducción de los valores por daños y perjuicios aplicables, a partir de la fecha en que expire el plazo contractual original o el ampliado.

El permitir al Contratista continuar y completar la obra o cualquier parte de ella, después de que el plazo contractual haya expirado, en modo alguno constituirá una dispensa del Contratante de cualquiera de los derechos que le corresponden de acuerdo con el Contrato. La deducción que el Contratante haga al Contratista de las sumas por daños y perjuicios, no eliminará la posibilidad de aplicarle también las demás sanciones previstas en el Contrato. Los montos máximos o porcentajes máximos de multas o premios estarán indicados en las CEC y tendrán como limite el 10% del Valor del Contrato antes de Impuesto.

2.1.6.8. Sección 109.08: Rescisión del Contrato

1.- Rescisión del Contrato por Incumplimiento del Contratista.-

1.1) El Contratista viola el Contrato si:

1.1.1) No inicia los trabajos dentro del tiempo especificado en la Orden de Inicio;

1.1.2) No suministra suficientes trabajadores, equipo o materiales para garantizar una construcción satisfactoria dentro del Plazo Contractual;

1.1.3) Ejecuta el trabajo insatisfactoriamente o descuidadamente o rehúsa remover y luego volver a construir obras o remover y reemplazar materiales rechazados por el Ingeniero como inaceptables;

1.1.4) Descontinúa el trabajo sin una orden de suspensión de parte del Ingeniero;

1.1.5) No reinicia el trabajo que haya sido suspendido, dentro de un período razonable de tiempo, después de recibir la orden del Ingeniero para hacerlo;

1.1.6) Si, por cualquier razón, no logra hacer avanzar las obras de conformidad con el Programa de Trabajo aprobado;

1.1.7) Rehúsa aceptar cualquier Orden de Cambio, emitida de conformidad con las disposiciones del Artículo-105.02 de estas CGC;

1.1.8) No cumple con todas las estipulaciones del Artículo- 108.14(2);

1.1.9) No cumple con los requerimientos del Artículo 109.03 de estas CGC;

1.1.10) No obedece las órdenes del Ingeniero;

1.1.11) Se vuelve insolvente o se declara en quiebra; y

1.1.12) Efectúa cualquier acto que evidencie estado de quiebra o insolvencia.

1.2) Si ocurre una violación del Contrato por parte del Contratista, el Ingeniero dará aviso por escrito a éste y a su Fiador o garante acerca del hecho, especificando las razones y dando instrucciones sobre las acciones a ser tomadas. El Contratista y su garante tendrán diez (10) días después del recibo de dicha notificación, para tomar las medidas correctivas de las condiciones que dieron lugar a la violación.

1.3) Si el Contratista o su Fiador o garante, no procediera dentro de ese plazo a efectuar las correcciones mencionadas, el Contratante tendrá plenos poderes y autoridad para aplicar cualquiera de los siguientes procedimientos.

1.3.1) Rescindir el Contrato y hacer efectiva la Fianza o Garantía de Cumplimiento en la proporción que permita el cumplimiento de las obligaciones contractuales del contratista. Hacer efectiva la fianza de adelanto en la proporción no amortizada del anticipo, hacer efectiva la fianza de pagos en la proporción que permita cumplir las obligaciones de pago que el contratista no haya cumplido y solicitará la fianza de calidad de las obras ejecutadas.

1.4) El Contrato será rescindido sin que el Contratista tenga derecho a reclamo alguno por daños y perjuicios, si;

1.4.1) Quiebra o llega al estado de suspensión de pagos, a menos que el Contratante aprobara una resolución de un Funcionario Judicial autorizando al Contratista para continuar su negocio;

1.4.2) El Contratista queda bajo liquidación judicial y no está autorizado a continuar su negocio;

1.4.3) El Contratista muere, excepto cuando el Contratante pueda aprobar alguna solicitud de sus herederos legales para continuar los trabajos.

1.6) En caso de que Contratante rescindiera al Contratista el derecho de proseguir con la ejecución de la obra, la liquidación del Contrato será hecha conforme a lo establecido en este mismo artículo, Cláusula 2, incisos del 2.1 al 2.9.

1.7) El derecho del Contratista a continuar los trabajos no será rescindido ni se le cobrarán daños y perjuicios, si:

1.7.1) La demora en la terminación de las obras provenga de causas imprevisibles fuera del control del Contratista y sin culpa ni negligencia de su parte, incluyendo, entre ellas, casos fortuitos, fuerza mayor y actos del Gobierno ya en el ejercicio de su soberanía o en la de su capacidad contractual; y

1.7.2) El Contratista, dentro de los 10 días de iniciada una demora de esta naturaleza (a menos que el Ingeniero conceda un período adicional que debe concluir antes de la fecha del pago final del Contrato), notificara por escrito al Ingeniero las causas de tal demora.

El Ingeniero hará la investigación de los hechos para lo cual determinará la magnitud de la demos, que le servirá para establecer la extensión correspondiente del Plazo del Contrato, además autorizará el pago de los costos incurridos por el Contratista cuando, su a su juicio, los resultados de la investigación de los hechos la justifiquen. El resultado de su investigación será final y concluyente para ambas partes, pudiéndose apelar solamente según lo previsto en el CGC.

2.- Rescisión del Contrato por Conveniencia del Contratante.

2.1) El Contratante se reserva el derecho de rescindir el Contrato, o parte de él, en cualquier oportunidad, mediante notificación escrita dirigida al Contratista, indicando los motivos de dicha rescisión, que podrá ser por emergencia nacional o por fuerza mayor.

La rescisión se hará en la forma y de acuerdo con la información que se dé en la notificación y no invalidará ningún reclamo anterior que el Contratante tuviere contra el Contratista.

2.2) Al recibir dicha notificación, a menos que el Contratante se lo indicara de otra manera, el Contratista deberá:

2.2.1) Suspender los trabajos bajo contrato, o la parte de ellos objeto de la rescisión, en la fecha indicada en la notificación;

2.2.2) Anular pedidos de materiales, maquinarias, herramientas y otros suministros hechos en relación con las obras suspendidas;

2.2.3) Rescindir todos los subcontratos y arreglos por servicios para las obras suspendidas;

2.2.4) Transferir al Contratante, de la manera, en la oportunidad y al grado que indique el Contratante, todos los derechos, títulos e intereses del Contratista sobre los pedidos, de materia, subcontratos y obligaciones todos relacionadas con el contrato que sean anulados (excepto adquisición de maquinaria) en cuyo caso el Contratante deberá, de arreglar o pagar todos los reclamos que resultaren de dichas anulaciones.

2.2.5) Liquidar todas las obligaciones pendientes y todos los reclamos resultantes de la anulación de pedidos, subcontratos y arreglos, con la aprobación o ratificación del Contratante, hasta el grado que éste lo requiera. Esta ratificación será definitiva para todos los propósitos de este artículo;

2.2.6) Transferir títulos al Contratante y entregarle, en la forma, fecha y grado, si los hubiere, indicados por el Contratante, (a) elementos fabricados o no fabricados, trabajos concluidos, suministros y otros materiales producidos como partes del trabajo suspendido por la nota de rescisión del Contrato o relacionados con dicho trabajo, y (b) los planos, dibujos, información y toda otra propiedad acabada, o parcialmente acabada que, de haber sido concluidas todas las obras bajo contrato, habrían sido propiedad del Contratante;

2.2.7) Esforzarse para vender, en la forma, oportunidad y al grado y precio indicados o autorizados por el Contratante, toda propiedad de los tipos a que se refiere el inciso 2.2.6), siempre y cuando el Contratista (a) no sea obligado a conceder crédito a ningún comprador y (b) pueda adquirir cualquiera de dichas propiedades bajo las condiciones prescritas y a precios aprobados por el Contratante. Además, el producto de tal transferencia o disposición deberá ser aplicado a cuenta de algún pago que el Contratante tuviera que hacer al Contratista con fundamento en este Contrato o en cualquier otra forma que indicara el Contratista.

2.2.8) Completar aquellos trabajos que no hubiesen sido incluidos en la nota de rescisión del Contrato;

2.2.9) Tomar todas las medidas que sean necesarias, o que el Contratante indique, para proteger y conservar la propiedad relacionada con este Contrato, que esté en posesión del Contratista y sobre la cual el Contratante tenga o pueda adquirir algún derecho.

2.3.- Al ser rescindido el Contrato por conveniencia del Contratante, éste reembolsará al Contratista todos los gastos en que razonablemente y de buena fe haya incurrido en la ejecución de los trabajos considerados en el Contrato y que no hayan sido reembolsados dentro de algunos de los conceptos de pago. La misma disposición se aplicará a los gastos en que incurriera el Contratista después de la fecha de rescisión del Contrato por razón directa e inmediata del mismo.

Las compensaciones a que tendrá derecho el Contratista, de acuerdo con este artículo, serán liquidadas de la siguiente manera:

2 3.1) Valor de las obras terminadas satisfactoriamente a la fecha en que fue efectiva la rescisión, pagadas a los precios unitarios del Contrato, mas cualquier suma retenida si la hubiera.

2.3.2) Si el Contrato incluye el concepto de Movilización, no le será abonado el total de este concepto sino que serán pagados únicamente los gastos en que realmente haya incurrido en transportar el equipo al sitio del trabajo y en desmovilizarlo hasta guardarlo en su propio plantel. Además, se le pagarán los gastos en que el Contratista haya realmente incurrido en materiales y mano de obra para la instalación de campamentos, talleres y demás instalaciones requeridas para la construcción de las obras. Estas instalaciones pasarán a ser propiedad del Contratante. Dichos gastos deberán ser justificados satisfactoriamente mediante documentación aceptable. En caso de que ellos excedan al monto establecido para el concepto de Movilización, se le pagará, como máximo, el que aparece en el Pliego de Licitación;

2.3.3) Los materiales comprados u ordenados por el Contratista antes de recibir la nota de rescisión para ser incorporados en la obra o utilizados en la construcción, previa presentación de las facturas y gastos de transporte y los reclamos resultantes de la rescisión que hayan sido aceptados;

2.3.4) Los costos inevitables en que haya incurrido el Contratista por el retiro del personal a partir de la fecha de la rescisión del Contrato. Para el personal local, se reconocerán las indemnizaciones a que tenga derecho según la Ley; para el personal extranjero serán reconocidas las indemnizaciones fijados por la Ley más los gastos de repatriación, si hay evidencia documental de que estos últimos fueron costeados por el Contratista;

2.3.5) Los trabajos preparatorios ya realizados, serán compensados de acuerdo con lo convenido entre el Contratante y el Contratista;

2.3.6) El pago durante un mes de salario, prestaciones e indemnizaciones legales para el personal directivo y personal auxiliar necesario para preparar las cuentas finales del Proyecto;

2.3.7) No será reconocido ni habrá pago por lucro cesante.

3.- Rescisión del Contrato por Conveniencia del Contratista.-

El Contratista podrá solicitar por escrito la rescisión del Contrato por cualquiera de las siguientes razones:

3.1) Atraso de sesenta (60) días en el pago del avalúo mensual después de la fecha de aprobación del mismo por parte del Ingeniero; u otro plazo indicado en las CEC, quedando siempre el dueño obligado al cumplimiento del contrato y en especial al pago de intereses y mantenimiento de valor prescrito en la ley.

3.2) Si el Contratante, por causas ajenas a la responsabilidad del Contratista, ordena la suspensión de los trabajos por más de tres (3) meses.

La liquidación final será hecha de conformidad con las estipulaciones de la Cláusula 2 de este mismo artículo.

2.1.6.9. Sección 109.09: Suspensión de los Trabajos

1.- El Ingeniero podrá ordenar al Contratista, por escrito (Directiva), la suspensión, aplazamiento o interrupción de toda o de una parte de las operaciones constructivas durante el período de tiempo que él considere pertinente, si así conviene al Contratante, con las limitaciones estipuladas en el Artículo 109.08 de estas CGC.

2.- En caso de que la ejecución de toda o alguna parte de la obra fuese suspendida, demorada o interrumpida durante un período excesivo de tiempo, por indicación del

Ingeniero, en relación con la administración del Contrato, o por lentitud o falta de actuación del Ingeniero dentro del tiempo estipulado o, en su defecto, dentro de un lapso razonable, se podrá hacer un ajuste en los precios unitarios contractuales, los que conservaran los mismos parámetros de la oferta o en el Plazo Contractual, o en ambos, si el Contratista demostrara que, por causa de la suspensión, hubo un aumento en el costo o en el tiempo de ejecución o en ambos. No obstante, no se hará ajuste alguno si:

2.1) El trabajo hubiera sido así suspendido, demorado o interrumpido por culpabilidad o negligencia del Contratista; o

2.2) Se hubiera estipulado un arreglo equitativo

3.- Además, ningún reclamo podrá ser presentado o aceptado bajo este artículo por alguna de las siguientes razones:

3.1) Por gastos que se hayan producido antes de 15 días de la fecha de presentación por escrito de la comunicación correspondiente, por parte del Contratista, al Ingeniero, sobre la acción u omisión objeto de reclamo;

3.2) Si el reclamo, que debe presentarse tan pronto como sea posible después de la terminación de tal suspensión, atraso o interrupción, es presentado con posterioridad a la fecha del pago final a que se refiere el Artículo 110.08 de estas CGC.

3.3) Si el reclamo tiene su origen en una orden de suspensión debidamente fundamentada.

4.- Además, el Ingeniero podrá, por orden escrita (Directiva), suspender la ejecución de la obra, total o parcialmente, por los períodos que juzgue necesarios:

4.1) A causa de condiciones de tiempo o suelos que considere inapropiados para la continuación de la obra; o

4.2) Porque el Contratista:

4.2.1) No haya corregido condiciones que son inseguras para los obreros o el público; o

4.2.2) No haya cumplido con alguna otra disposición del Contrato.

El cese de trabajo en algunos de los conceptos del Proyecto, será considerado como "Suspensión Parcial". El cese de trabajo en todos los conceptos será considerado como "Suspensión Total". Durante el período de suspensión total podrán ser efectuados trabajos de emergencia que fueren ordenados por el Ingeniero para dar facilidades a la circulación del tráfico y operaciones menores que no sean afectadas por causa de la suspensión o no estén relacionadas con ella, si lo permite el Ingeniero.

Todo ajuste en el Plazo del Contrato por suspensión del trabajo será efectuado conforme al Artículo 109.06 de estas CGC.

No se hará ningún ajuste en el Valor del Contrato por suspensiones de trabajo ordenadas con fundamento en el inciso (4.2) de este artículo.

5.- En todo caso de suspensión por conveniencia del Contratante y **no por otra causa**, el ajuste por aumento en los costos del Contratista en la ejecución de las obras consideradas en este Contrato, será avaluado en la forma siguiente:

5.1) El Contratante pagará al Contratista el valor de los salarios del personal que permanezca sin trabajar por causa exclusiva de la orden de suspensión y que haya sido contratado específicamente para la operación afectada por dicha suspensión, más los viáticos y el valor de las prestaciones sociales legales. Además, el Contratista recibirá una suma igual al 20% de la compensación total por mano de obra, calculada como se acaba de indicar;

5.2) Por toda maquinaria o equipo especial, exceptuando herramientas pequeñas, cuyo uso haya sido autorizado por el Ingeniero para ese trabajo en particular y esté en el lugar de la obra en buenas condiciones de operación y se viese afectada por la suspensión, el Contratante pagará al Contratista los costos de posesión de las tarifas detalladas en la oferta.

5.3) En caso de que la suspensión por conveniencia del Contratante se vaya a extender por más de 30 días, el Contratante, a su discreción, podrá ordenar al Contratista el retiro de la cantidad de personal que el Ingeniero estime conveniente y permitirle el uso en otros trabajos, del personal restante y de la maquinaria y equipo, si esto fuera factible, en cuyo caso no se le reconocería al Contratista pago adicional alguno por el personal y equipo usados en otros trabajos. El Contratista tendrá derecho a que se le reconozcan los costos del retiro de personal, de acuerdo con la Ley.

2.1.6.10. Sección 109.10: Fuerza Mayor

Se entenderá como fuerza mayor, todo evento cuya ocurrencia esté fuera del control y responsabilidad del Contratista o sus empleados, entre los cuales (sin limitarse a ellos) están los desastres naturales como terremotos, erupciones volcánicas, marejadas, inundaciones, tornados, huracanes e incendios; actos de enemigos públicos, acciones de guerra, rebelión,

insurrección, motines, asonadas, huelgas, embargos de carga, epidemias, restricciones por cuarentenas, suspensiones del transporte de materiales o del personal, condiciones climatológicas excepcionalmente rigurosas, y acciones del Gobierno en el ejercicio de su soberanía o en el de su capacidad contractual y las demoras que sufra el Contratista en el progreso del trabajo como resultado de tales eventos.

Cuando en opinión del Contratista existan condiciones de fuerza mayor, deberá notificar por escrito al Ingeniero dentro de los diez (10) días siguientes a la ocurrencia de las causas de tales condiciones. El Ingeniero hará las investigaciones y contestará por escrito informando al Contratista si el Contratante está de acuerdo o no sobre la existencia de condiciones de fuerza mayor.

Si el Contratante no está de acuerdo en que se han presentado condiciones de fuerza mayor, dará a conocer al Contratista, por escrito y con todos los detalles, las razones que respaldan tal decisión y le ordenará continuar los trabajos de acuerdo con los términos y condiciones del Contrato.

Si el Contratante concuerda con el Contratista en la ocurrencia de condiciones de fuerza mayor, los trabajos serán inmediatamente suspendidos y serán aplicables las disposiciones del Artículo 109.09, mientras duren dichas condiciones, excepto que:

a) El Contratista podrá remover su personal, herramientas, equipo y materiales del lugar de la obra y llevarlos a lugar seguro;

b) El Contratista no será responsable por los daños que sufra la obra, a menos que ellos sean el resultado de su descuido o falta de supervisión y control adecuados;

c) El Contratista quedará libre de la responsabilidad del mantenimiento de la Obra, prescrito en el Artículo 108.22, mientras duren las condiciones mencionadas.

2.1.6.11. Sección 109.11: Finiquito del Contrato

Se considerará que el Contratista ha cumplido con el Contrato cuando toda la obra haya sido completada y aceptada de acuerdo con las disposiciones del Artículo 106.17. La fecha de aprobación por parte del Contratante del último Estimado de Pago, será considerada como la fecha de liquidación final del Contrato. Este acto no excluye que se tome en consideración algún reclamo que el Contratista presente en el futuro, si el Contratista hubiera dejado a salvo ese derecho en constancia asentada en el Estimado de Pago Final.

2.1.7. SECCIÓN 110: MEDICIÓN Y PAGO

2.1.7.1. Sección 110.01: Medición de Cantidades de Obra

Las obras, concluidas de conformidad con el Contrato, serán medidas conjuntamente por el Ingeniero y el Contratista de acuerdo con lo establecido en el Artículo-106.09 de estas CGC.

En toda medición se deberá usar el Sistema Métrico Decimal, a menos que el Pliego de Licitación lo estableciera de otra manera para algún Concepto de obra.

En la medición y el cálculo de las cantidades de material suministrado y de trabajo según el Contrato, se deberán usar métodos ya sancionados por la práctica y en uso corriente en la ejecución de obras similares y que, además, concuerden con los requerimientos de las especificaciones aplicables al Contrato.

Previa autorización del Ingeniero, los reembolsos por avance de obra se harán de acuerdo con el estado de avance de la misma, mediante estimados o avalúos mensuales basados en las cantidades hechas de cada uno de los conceptos de pago estipulados en el Contrato y en los respectivos Precios Unitarios de los mismos.

2.1.7.2. Sección 110.02: Pagos Basados en las Cantidades Mostradas en los Planos

1.- Cuando el Contrato especifique el pago de una obra o parte de una obra con base en la cantidad indicada en los planos, las cantidades por pagar serán las mostradas en los planos con las deducciones o adiciones a tales cantidades que resultaren de modificaciones autorizadas con respecto a las mostradas en los planos.

2.- Si el Contratista opina que no es correcta una cantidad cuyo pago está especificado con base en la cantidad del plano, podrá solicitar por escrito que el Ingeniero compruebe la cantidad dudosa. La solicitud deberá ir acompañada de cálculos, dibujos u otra prueba que demuestre por qué considera errónea la cantidad del plano. Si se encuentra que la cantidad en cuestión está realmente equivocada, entonces, el pago se hará corrigiendo la cantidad del plano.

2.1.7.3. Sección 110.03: Pagos Basados en Mediciones Directas

Los métodos específicos a seguir para definir las cantidades de obra a pagar según el Contrato, serán detallados en el artículo sobre "Medición" de los diferentes conceptos de pago.

A menos que fuera especificado de otra manera en alguna otra parte de estas CGC o en los planos, las mediciones longitudinales para el cálculo de áreas, serán hechas horizontalmente y no se harán deducciones por dispositivos comprendidos en ellas que tengan un área de un metro cuadrado o menos. Asimismo, salvo disposición específica en contrario, las mediciones transversales para el cálculo de áreas serán hechas de conformidad con las dimensiones netas mostradas en los planos u ordenadas por escrito por el Ingeniero.

Las estructuras serán medidas de acuerdo con las líneas netas mostradas en los planos o según haya sido ordenado por el Ingeniero para acomodarlas a las condiciones en el campo.

Todos aquellos conceptos medidos por metro lineal, tales como alcantarillas tubulares, guardavías, subdrenes, etc., serán medidos paralelamente a la base o fundación sobre la cual estén colocadas dichas estructuras, a menos que los planos lo mostraren de otra manera.

En el cálculo de los volúmenes de excavación se hará uso del método del promedio de áreas extremas o de otro método aceptable que esté indicado en las CEC.

El espesor de planchas y láminas galvanizadas usadas en la manufactura de tubos de metal corrugado, tubería circular y arcos, así como de muros de retención de elementos metálicos, serán especificados y medidos en milímetros o centímetros y fracciones decimales.

El vocablo "calibre" se refiere al calibre de alambres especificado en la norma AASHTO M32, equivalente a la ASTM A82.

El vocablo "tonelada" se refiere a la "tonelada métrica", que tiene 1000 kilogramos. Todos los materiales que sean medidos o proporcionados por peso, deberán ser pesados en básculas exactas aprobadas u otros dispositivos de pesaje, por personal competente y calificado, en los lugares designados por el Ingeniero.

No se permitirá el uso de balanzas de resortes.

Para los materiales que vayan a ser pagados por peso y que sean transportados en camiones, se pesarán éstos vacíos, por lo menos, una vez al día, a menos que estuviese especificado de otra manera en las CEC o en otras secciones de las especificaciones técnicas CGC, y en las ocasiones que ordene el Ingeniero. Cada camión deberá llevar una placa de identificación claramente visible con indicación de su capacidad.

Los materiales que tengan que ser medidos por volumen en el vehículo de acarreo, deberán ser transportados en vehículos aprobados y medidos en ellos en el lugar de entrega. Los vehículos para este objeto podrán ser de cualquier tamaño o tipo aceptable para el Ingeniero, con tal de que la caja tenga una forma que permita calcular el volumen fácilmente y con exactitud. Todos los vehículos deberán ser cargados, por lo menos, hasta su capacidad al ras. Toda carga específica deberá ser enrasada cuando el vehículo llegue al lugar de entrega, si así lo ordena el Inspector.

Si fuera convenido por escrito entre el Ingeniero y el Contratista, todo material cuya medición para fines de pago esté especificada por volumen, podrá ser pesado y su peso, convertido a unidades cúbicas. Los factores de conversión de peso a volumen serán determinados por el Ingeniero y aprobados por el Contratista antes de poder aplicar este método de pago.

Si se ha establecido que el pago de agregados pétreos será efectuado por peso, éste incluirá el contenido de humedad, salvo que se haya estipulado lo contrario en las CEC. Si fuera necesario determinar el contenido de humedad, se determinará el promedio diario secando al calor un mínimo de tres muestras representativas del agregado. Dichas muestras serán obtenidas de la producción de cada ocho horas a intervalos escogidos al azar.

Cuando se haya indicado el uso de escoria y piedra (o grava) como materiales sustitutos en algunos conceptos de pago del Pliego de Licitación y el pago tenga que ser hecho por peso, las cantidades estimadas estarán basadas en los pesos específicos brutos promedios estimados de los materiales alternos disponibles y no se hará ajuste alguno en el precio unitario de contrato por variaciones en las cantidades a causa de diferencias en el peso específico del material efectivamente usado.

Los materiales asfálticos serán medidos en litros, para ello, mídase el volumen a 15ºC ó corríjase el volumen a 15ºC usando los factores de corrección estándar reconocidos.

Cuando el asfalto emulsionado es convertido de volumen a masa (peso), úsese un factor de 1000 litros por tonelada métrica independientemente de la temperatura.

Cuando los materiales asfálticos son embarcados por camión, se podrán usar para el cálculo de cantidades los pesos o volúmenes netos certificados, sujetos a corrección por pérdida o espumación.

Todo volumen de material asfáltico a ser pagado directamente por medio de un concepto de pago contractual, será medido y pagado ya colocado y aceptado en la obra, de conformidad con las tasas de aplicación estipuladas en las especificaciones u ordenadas

por el Ingeniero (considerando las tolerancias) y los ajustes y correcciones por temperaturas y pérdidas indicados en este artículo.

El cemento Portland será medido por bolsa. El vocablo "bolsa" significará 42.5 kilogramos de cemento.

La cal hidrata será medida por "bolsa". El vocablo "bolsa" significará 22.67 Kgs.

La madera será medida en metros cúbicos. Las mediciones se basarán en anchos y espesores nominales y en la longitud utilizable de cada pieza.

La expresión "suma global", cuando sea usada como concepto de pago, significará el pago completo por tal trabajo especificado en el Contrato, independientemente de las dimensiones y cantidad.

Cuando se especifique que una estructura completa o unidad estructural será pagada por "suma global", se entenderá que incluye todos los accesorios y herrajes necesarios.

Cuando sean especificados artículos manufacturados estándar, tales como cercas, alambre, láminas, perfiles laminados, tubos, conductos, etc., y esos materiales fuesen identificados por calibre, peso unitario, dimensiones de la sección, etc., se considerará que tal identificación se refiere a pesos o secciones nominales. A menos que fuesen más rigurosamente controladas por tolerancias en especificaciones determinadas, serán aceptadas las tolerancias de fabricación establecidas por las correspondientes industrias.

2.1.7.4. Sección 110.04: Alcance de los Pagos

A menos que hubiera otra disposición específica en contrario, el Contratista deberá recibir y aceptar la compensación asignada en el Contrato para conceptos de pago, como pago total por el suministro de toda la mano de obra, materiales, equipo, administración e imprevistos y por ejecutar toda la obra considerada en el Contrato, de una manera completa y aceptable, así como por todo riesgo, pérdida, daño o gastos de toda clase que resultasen de la naturaleza del trabajo o de la ejecución del mismo.

Si el artículo titulado "Base de Pago" en las especificaciones relativas a cualquier concepto de obra en el Contrato, requiere que el precio unitario en el Contrato cubra y sea considerado como compensación por determinado trabajo o material esencial para dicha obra, ese mismo trabajo o material no será medido ni pagado bajo ningún otro concepto de pago que aparezca en otra parte de las especificaciones.

2.1.7.5. Sección 110.05: Compensación por Cambios y Modificaciones en las Cantidades

Los ajustes en los precios por cambios serán efectuados de acuerdo a lo establecido en el Artículo-105.02. De acuerdo con ese artículo, no serán ajustados los precios unitarios como resultado de variaciones en las cantidades contratadas, excepto en los siguientes casos:

1.- Cuando la cantidad de trabajo o de material que tenga que ser suministrado bajo cualquier "Concepto Mayor" del Contrato, resulte incrementada en más de 25% sobre la cantidad mostrada en el Pliego de Licitación, entonces, cualquiera de las partes, si así lo reclama, tendrá derecho a un ajuste equitativo en el precio de las cantidades de obra adicionales al 125% de la cantidad mostrada en el Pliego de Licitación, si demuestra que hay variación en los costos.

2.- Cuando la cantidad de trabajo o de material que tenga que ser suministrado bajo cualquier Concepto Mayor resulta disminuida en más de 25% de la cantidad mostrada en el Pliego de Licitación, entonces cualquiera de las partes, si así lo reclama, tendrá derecho a un ajuste equitativo en el precio de la cantidad de obra realmente ejecutada, el cual estará limitado a un pago total no menor del 75% del monto originalmente licitado para tal Concepto Mayor, si demuestra que hay variación en los costos.

Todo ajuste equitativo en los precios acordados entre las partes como consecuencia de cambios y variaciones en las cantidades originales de los Conceptos Mayores de acuerdo con el Artículo-105.02, deberá ser incorporado en la orden escrita expedida por el Ingeniero, la cual estará redactada en tal forma que muestre la conformidad del Contratista por medio de su firma.

Si ambas partes no pudieran llegar a un acuerdo sobre los precios, el Contratante podrá ordenar al Contratista continuar el trabajo de conformidad con el Contrato, para lo cual emitirá una Orden de Cambio unilateral y, con respecto a un posible ajuste equitativo en los precios, proceder de una de las siguientes maneras:

2.1) Hacer uso de la facultad arbitral que tiene el Ingeniero para que determine si los precios originales del Contrato son aplicables o no y, en este último caso, calcule los ajustes equitativos de acuerdo con su criterio y las circunstancias que los afecten;

2.2) Determinar el ajuste equitativo mediante control de los costos reales del Contratista, para lo cual éste deberá dar todas las facilidades requeridas por el Ingeniero. Si el

Contratista se negara a permitir el control de sus costos, el Ingeniero aplicará el procedimiento descrito en (2.1) ó el descrito en (2.3), a continuación;

2.3) Ordenar que el trabajo sea llevado a cabo de acuerdo con las estipulaciones del Artículo 110.06, de estas CGC.

2.1.7.6. Sección 110.06: Trabajos por Administración, (A Costo más Porcentaje)

Si en el Contrato está prevista una suma para llevar a cabo ciertos trabajos por el sistema de administración, cuando lo ordene el Ingeniero, el Contratista estará obligado a ejecutar dichos trabajos, cuya compensación estará basada en el costo más un porcentaje, de conformidad con las disposiciones establecidas en el presente artículo.

Este sistema de trabajo y de pago se limitará:

(1) a trabajos contingentes no cubiertos por precios unitarios respecto a los cuales las partes contratantes no logren ponerse de acuerdo acerca de la compensación por medio de una suma global o de precios unitarios negociados;

(2) a trabajos cubiertos por una "Orden de Cambio", en los que no se logre acuerdo en la negociación de precios unitarios,

(3) a trabajos efectuados por cambios en las condiciones, según se describió en el Artículo-105.02 de estas CGC, en los que no se llegue a un acuerdo satisfactorio sobre una compensación basada en precios unitarios.

En los casos antes mencionados, la compensación a que tendrá derecho el Contratista será determinada en la forma siguiente:

1.- Mano de Obra.- En trabajos por Administración efectuados de acuerdo con este artículo se pagará, en adición al costo efectivo de la mano de obra, el costo de las prestaciones sociales que la ley concede a los trabajadores. El Contratista obtendrá, además, un monto igual al 20% del total determinado para Mano de Obra, en concepto de costo indirecto más utilidad.

2.- Materiales.- Por los materiales aceptados por el Ingeniero y utilizados en la obra, el Contratista recibirá el costo efectivo de tales materiales entregados en la obra, incluyendo los gastos de transporte, excluyendo los costos del alquiler de maquinaria, según lo expuesto más adelante, a cuyo costo se añadirá un 12 por ciento por costos indirectos más utilidad.

3.- Tarifas de Alquiler de la Maquinaria.- Las tarifas de alquiler de la maquinaria que sea usada en cualquier Trabajo por Administración, de acuerdo con este artículo, serán las aceptadas en la oferta, si las CEC no han establecido tarifas de equipo. Si algún equipo no aparece en dicha lista, su tarifa será calculada de conformidad con el "CONSTRUCTION EQUIPMENT OWNERSHIP AND OPERATING EXPENSES SCHEDULE" (Lista de Costos de Posesión y Operación de Equipo de Construcción) publicado por el USCOE obtenible del "U.S. Superintendent of Documents, U.S. Government Printing Office, Washington D.C. 20402-9325.

Estos precios incluyen los siguientes conceptos y servicios sin compensación adicional:

Depreciación, combustible, aceites y grasas lubricantes, reparaciones en el campo, reacondicionamiento, reparaciones mayores, interés, impuestos, vigilancia, seguros y erección. No habrá pago adicional por la remoción de la maquinaria del lugar del trabajo a la terminación del Contrato.

En trabajos por Administración, el pago por el uso de la maquinaria se hará por las horas efectivamente trabajadas y autorizadas por el Ingeniero. El tiempo de espera, de acuerdo con instrucciones del Ingeniero, será pagado al 12% de la tarifa aprobada mientras dure tal espera durante las horas normales de trabajo. Para calcular la Tarifa Horaria de equipo no incluido en las ofertas ni en las CEC, el Contratista someterá al Ingeniero los documentos de soporte necesarios, tales como facturas, conocimientos de embarque terrestre y marítimo, facturas consulares, etc., o bien, según lo estipulado antes en esta Cláusula.

Se le pagarán al Contratista los gastos de transporte de las máquinas alquiladas desde el sitio en que se encuentran hasta el sitio en que serán utilizadas y de vuelta al punto de partida, a condición de que:

3.1) El equipo sea obtenido del lugar más cercan;

3.2) Que los gastos por el regreso no sean mayores que los de la entrega;

3.3) Que las tarifas del transporte no excedan a las tarifas establecidas por transportistas autorizados; y

3.4) Que tales gastos estén restringidos a aquellas unidades de equipo que no se encuentren ya disponibles en o cerca del Proyecto.

Quedará entendido que todo el equipo que se utilice debe encontrarse en buenas condiciones de funcionamiento.

No se agregará ningún porcentaje por ningún concepto a las tarifas de alquiler de equipo ni tampoco se pagará compensación adicional alguna por reparación del mismo.

4.- Gastos Varios.- No se dará ninguna compensación por superintenencia general ni por el uso de herramientas pequeñas ni otros gastos para los cuales no esté prevista en este artículo alguna asignación específica.

5.- Registros.- Diariamente, el Contratista y el Ingeniero, o sus respectivos encargados, deberán comparar sus propios registros sobre el costo del trabajo hecho en el día por el método de Administración en cumplimiento de una orden expedida por el Ingeniero. Se harán copias de dichos registros en machotes especiales proporcionados por el Contratista e impresos de acuerdo con diseño suministrado por el Ingeniero. Para legalizar estos documentos llevarán la firma de ambos, el Ingeniero y el Contratista, o de sus respectivos representantes autorizados, en dos copias, una para cada una de las partes.

6.- Estados de Cuenta.- No se hará ningún pago por trabajos realizados por Administración mientras no hayan sido preparados y firmados los registros exigidos en la Cláusula (5) que antecede, detallados en la forma siguiente:

6.1) Nombre, clasificación, fecha, horas trabajadas en el día, total de horas trabajadas, salario por hora y por día para cada obrero y capataz;

6.2) Descripción, fechas, horas diarias trabajadas, total de horas, tarifas de alquiler y total devengado por cada unidad de maquinaria y de equipo;

6.3) Cantidades de materiales, precios y valores totales;

6.4) Gastos en transporte de materiales;

6.5) Importe de las primas por seguros y prestaciones sociales del personal, en caso de que en las CEC no se hubiera señalado un porcentaje fijo.

Los Estados de Cuenta deberán ser acompañados y respaldados por las facturas firmadas ya pagadas, por todos los materiales utilizados, incluyendo los gastos de acarreo. Sin embargo, en caso de que los materiales empleados en los Trabajos por Administración no hubiesen sido comprados especialmente para tal obra, sino tomados de las existencias del Contratista, en vez de las facturas, el Contratista presentará una Certificación en la que confirme que tales materiales fueron obtenidos de sus propias existencias, que realmente se usó la cantidad declarada y que el precio y el flete declarados representan el costo verdadero para el Contratista.

7.- Pago.- El pago por trabajo autorizado y efectuado de acuerdo con este artículo, será hecho dentro de los avalúos mensuales según el avance de la obra. Las cantidades por pagar tendrán como base los informes diarios firmados sobre el trabajo llevado a cabo, y los estados del Contratista sobre los costos requeridos por las Cláusulas 5 y 6 que anteceden.

2.1.7.7. Sección 110.07: Eliminación de Conceptos de Pago

En caso de que el Ingeniero determinase que algunos trabajos incluidos en el Contrato, con su concepto de pago correspondiente, no fuesen realmente necesarios para obtener una obra completa y satisfactoria, podrá, mediante notificación escrita dirigida al Contratista, eliminar tales conceptos de pago del Contrato, sin que por ello éste quede invalidado. Si el Contratista fuese notificado de la eliminación de algún tipo de trabajo y de su correspondiente concepto de pago, todo trabajo de ese tipo que a esa fecha hubiese completado, será compensado por medio de una Orden de Cambio. Esta considerará, además del trabajo completado, todos los trabajos preliminares, materiales adquiridos y procesados, etc., así como todos los gastos en que el Contratista hubiese incurrido con anterioridad a la fecha de la citada notificación, exceptuando utilidad y gastos generales.

2.1.7.8. Sección 110.08: Pagos al Contratista

1.- El Contratante hará pagos parciales mensualmente de conformidad con el avalúo del avance de la obra, o a intervalos más frecuentes, si lo considera conveniente. Dichos pagos estarán basados en estimaciones, preparadas o aprobadas por el Ingeniero, del valor de las obras ejecutadas de acuerdo con el Contrato. En las estimaciones preparadas con fines de pago, podrá el Ingeniero, a su criterio, incluir trabajos preliminares efectuados y el valor de materiales no perecederos, ensayados y aceptados, entregados en el Proyecto y almacenados de acuerdo con sus instrucciones.

A fin de que se pueda autorizar pagos por materiales entregados y almacenados en el Proyecto, se deberán llenar los siguientes requisitos:

1.1) Los pagos por materiales entregados y almacenados en el Proyecto, deberán estar autorizados específicamente en el Contrato;

1.2) Los materiales deberán estar aceptados por el ingeniero para su incorporación en la obra;

1.3) La cantidad deberá ser certificada por el Ingeniero;

1.4) De la cantidad certificada por el Ingeniero se podrá pagar hasta el 75% en el estimado parcial;

1.5) El Contratista deberá demostrar que tales materiales son de su propiedad y que han sido adquiridos o producidos para uso exclusivo en el Proyecto.

1.6) No se harán pagos por materiales vivos para siembra, hasta que hayan sido plantados y estén sobreviviendo en el sitio.

1.a. En las estimaciones preparadas con fines de pago, también podrá el Ingeniero, a su criterio, incluir el valor de materiales importados tales como alcantarillas metálicas, gaviones, acero de refuerzo y acero estructural, antes de que lleguen al Proyecto.

A fin de que el Ingeniero pueda autorizar pagos por materiales importados, en el puerto de embarque, se deberán llenar los siguientes requisitos:

1.a.1) Los pagos por materiales importados, en el puerto de embarque, deberán estar autorizados específicamente en las CEC;

1.a.2) El Contratista deberá presentar evidencia de haber cancelado la Carta de Crédito correspondiente. En la Carta de Crédito se indicará que tales materiales son adquiridos por el Contratista para uso exclusivo en el Proyecto contratado, indicando el nombre del mismo;

1.a.3) La cantidad importada no deberá ser mayor que la mostrada en el Pliego de Licitación;

1.a.4) Los materiales importados para el Proyecto deberán estar amparados por el correspondiente Certificado de Calidad emitido por el Fabricante o un laboratorio independiente que hubiese escogido el Contratante;

1.a.5) De la cantidad certificada en la Carta de Crédito se podrá pagar hasta el 75% en el estimado parcial, siempre y cuando el Contratista de al Contratante una fianza o garantía aceptable por igual valor que el pago recibido; dicha fianza o garantía será devuelta al Contratista una vez que los materiales lleguen al sitio de trabajo;

2.- No se hará pago parcial alguno cuando el valor total del trabajo hecho posteriormente al estimado anterior sea inferior al 0.5 por mil del Valor del Contrato Original.

3.- Del monto total a ser pagado al Contratista en cada pago parcial, el Contratante retendrá el 10 porciento como Retención Ordinaria, hasta la terminación satisfactoria de las obras contratadas y haya quedado resuelto todo reclamo que el Contratante tuviera contra el Contratista. (La Retención Ordinaria afectará a los pagos parciales (excepto al pago por Movilización o Anticipo, si cualquiera de estas modalidades estuviera considerada en el Contrato). Sin embargo, si el Contratante, después de que el Contratista haya completado el 50 porciento del trabajo contratado, en cuenta que tanto la calidad de la obra como el avance son satisfactorio y no hay reclamos por deudas de parte de los suplidores de bienes o servicios, podrá, si lo solicita el Contratista, autorizar el pago completo de cualquiera de los estimados parciales restantes hasta completar la obra. Asimismo, una vez que la obra estuviera sustancial y satisfactoriamente completa, el Contratante, sin necesidad de notificar a los fiadores o garantes, podrá autorizar el pago al Contratista de todo o parte del exceso retenido, si considera que el monto acumulado de la Retención Ordinaria es excesivo en comparación con la suma adecuada para la protección del Contratante.

4.- La Retención Ordinaria no podrá ser tomada como fundamento para reclamar reajuste en los precios contractuales contenidos en la Oferta.

5.- El pago de algún estimado parcial o del concepto de Movilización o Anticipo (si alguna de estas modalidades estuviera considerada en el Contrato), no relevará al Contratista de ninguna de las obligaciones contraídas en los términos del Contrato.

6.- Los estimados de pago o avalúos parciales, serán preparados en machotes impresos suministrados por el Contratista, diseñados de acuerdo con las disposiciones u órdenes del Contratante y con el número de copias requeridas por éste.

7.- En proyectos del Sector Público, debido a las regulaciones gubernamentales y a los trámites de la Fuente de Financiamiento, si hubiese alguna involucrada en el Proyecto, los pagos parciales al Contratista serán efectuados normalmente dentro de los treinta (30) días calendario siguiente a la firma de las facturas por el Contratista y el Ingeniero. El Contratante reconocerá el pago de intereses moratorios legales por cualquier atraso que exceda al plazo aquí mencionado.

8.- Todo el material y trabajos por los cuales el Contratante haya hecho pagos, pasarán a ser de su propiedad, sin que ello signifique que el Contratista quede relevado de su responsabilidad de conservar y mantener dichos materiales y obras, o de reparar cualquier parte de la obra que haya sufrido deterioro. Tampoco implicará que el Contratante renuncia al derecho de exigir el cumplimiento de todas las condiciones del Contrato ni al derecho de

comprobar, en cualquier oportunidad, si los pagos mensuales han sido efectuados correctamente según los conceptos de pago contractuales.

9.- El Ingeniero podrá retener todo pago al Contratista por trabajos hechos o materiales suministrados, si éste ha incurrido en alguna violación del Contrato, y ordenar hacer efectivo tal pago sólo después de que el Contratista haya corregido la falta que motivara la retención. Igualmente, el Contratante se reserva el derecho de retener, de todo pago mensual, el equivalente de cualquier reclamo de terceras personas por incumplimiento del Contratista en el pago de materiales, mano de obra o servicios. El hecho de que no se le retenga ninguna cantidad al Contratista, en modo alguno será interpretado como una exención de responsabilidad para él y el fiador o garante.

10.- Todos los estimados y pagos hechos anteriormente, estarán sujetos a corrección en cualquier estimado subsiguiente, incluyendo el estimado y pago finales.

11.- La liquidación final del Contrato será autorizada después de haber sido completado y aceptado el trabajo de acuerdo con lo dispuesto en el Artículo-106.17. La fecha de aprobación por parte del Contratante del estimado final de pagos, constituirá la fecha correspondiente a la liquidación final del Contrato.

En caso de que el Contratista tuviere reclamos contra el Contratante por pagos o liquidaciones consideradas por él como injustas o que no hayan estado de acuerdo con las estipulaciones del Contrato, deberá HACERLO CONSTAR por medio de una protesta suya, escrita al margen del Estimado Final, reservándose el derecho de presentar su reclamo de acuerdo con el Contrato. Estos reclamos podrán referirse únicamente a medidas o liquidaciones erróneas o injustas, ya que todo reclamo relativo a ajustes equitativos por cambios en las condiciones, deberá ser presentado de acuerdo con lo establecido en los Artículos-105.02 de estas CGC.

Los reclamos deberán ser presentados, a más tardar, 30 días después de LA FECHA DE LIQUIDACIÓN FINAL DEL CONTRATO, definida en este mismo artículo. Después de esta fecha límite, no se aceptará ningún reclamo. Este deberá ser presentado a la UCP o instancia equivalente del Contratante, la cual dará su decisión por escrito y suministrará copia de la misma al Contratista. En caso de que el Contratista considere que la decisión de la UCP es errónea, injusta o no ajustada a los términos del Contrato, podrá seguir el procedimiento para CONTROVERSIAS establecido en el CGC, siempre que apele dentro de los 30 días siguientes a la fecha en que le sea notificada la decisión.

12.- Una vez aceptada y terminada la obra y resueltos todos los reclamos, el Contratante devolverá al Contratista la suma que le hubiere sido retenida, previa deducción de cualquier cantidad a que el Contratante tuviere derecho por concepto de daños y perjuicios, por demoras o por cualquier otra causa (Reclamos de proveedores de bienes o servicios).

13.- Si después de la aceptación final de la obra se prevé que habrá un retraso considerable en el cómputo y comprobación del estimado y pago final, el Contratante podrá, a su criterio, si lo solicitara el Contratista y consintiera el fiador o garante, adelantar al Contratista una parte del pago pendiente.

2.1.7.9. Sección 110.11: Movilización

Si el Pliego de Licitación incluye el concepto de Movilización, deberá entenderse como tal el pago por aquellos trabajos y operaciones preparatorias necesarias para el traslado de personal, equipo, suministros e imprevistos al lugar del trabajo; para el establecimiento de todas las oficinas, edificios y otras facilidades necesarias para el trabajo en el Proyecto; y todo otro trabajo y operaciones que tengan que ser efectuadas, o costos en los que el Contratista tienen que incurrir en el lugar de la obra, antes del inicio de los trabajos.

El monto de este concepto podrá ser fijado por el Contratante, o bien, si las CEC así lo establecen, cotizado por el Oferente en su oferta, cuyo valor en ningún caso excederá al 10% del monto del resto del trabajo incluido en el Contrato, o sea, excluido el monto de Movilización.

Los pagos parciales por el concepto de Movilización serán efectuados de la manera siguiente:

1.- Cuando el Contratista haya llevado a cabo obras por un valor igual al 5% del Valor Original del Contrato, se le pagará el 25% de la suma total asignada a Movilización, o bien el 2.5% del Valor Original del Contrato, según lo que resulte más bajo.

2.- Cuando el Contratista haya llevado a cabo obras por un valor igual al 10% del Valor Original del Contrato, se le completará el pago del 50% de la suma total asignada a Movilización, o bien, el 5% del Valor Original del Contrato, según lo que resulte más bajo.

3.- Cuando el Contratista haya llevado a cabo obras por un valor igual al 25% del Valor Original del Contrato, se le completará el pago del 60% de la suma total asignada a Movilización, o bien, el 6% del Valor Original del Contrato, según lo que resulte más bajo.

4.- Cuando el Contratista haya llevado a cabo obras por un valor igual al 65% del Valor Original del Contrato, se le completará el pago del 90% de la suma total asignada a Movilización, o bien, el 9% del Valor Original del Contrato, según lo que resulte más bajo.

5.- Cuando el Contratista haya llevado a cabo obras por valor igual al 80% del Valor Original del Contrato, se le completará el pago del 100% de la suma total asignada a Movilización, o bien, 10% del Valor Original del Contrato, según lo que resulte más bajo.

6.- Después de la Aceptación Final de las obras del Proyecto, se pagará al Contratista cualquier suma retenida por concepto de Movilización.

Lo anterior no impide que se pague la Movilización en pagos parciales repartidos de otra manera, si así lo establece el Contrato.

La suma global pagada en concepto de Movilización constituirá compensación total por el suministro de toda la mano de obra, materiales, herramientas, equipo, administración e imprevistos para efectuar el trabajo considerado dentro del concepto de Movilización.

La Retención Ordinaria del 10% sobre el Monto Devengado por el Contratista por obras efectuadas, no será aplicada al concepto de Movilización.

Las estipulaciones sobre ajuste en los precios del Artículo-105.02 no serán aplicables al concepto de Movilización, que es una Suma Global.

Cuando sean ajustados otros conceptos de pago del Contrato de acuerdo con el Artículo-105.02 de estas CGC, si los costos aplicables a tal concepto de pago incluyen costos de Movilización, se considerará que tales costos de Movilización han sido recuperados por el Contratista mediante los pagos que haya recibido por concepto de Movilización, y serán excluidos al determinar la compensación por los "Cambios" a que se refiere el citado Artículo 105.02.

Si el Contrato no incluye el concepto de pago por Movilización, de acuerdo con lo estipulado anteriormente en este artículo, la compensación total por toda la movilización que fuese requerida, será considerada como subsidiaria de los varios conceptos de pago involucrados y no habrá compensación adicional por ese concepto.

2.1.7.10. Sección 110.11: Anticipos

Si el Pliego de Licitación no incluye el concepto de Movilización y las CEC consideran conceder al Contratista el anticipo de una suma fija o de un porcentaje determinado del Valor Original del Contrato, suma que estaría destinada a financiar la movilización y gastos iniciales en que tiene que incurrir el Contratista para la ejecución de las obras, regirán las siguientes condiciones:

1.- El Anticipo no constituirá un Concepto de Pago, en contraposición al concepto de Movilización, cuando éste existe en las bases del Contrato.

2.- El Anticipo deberá ser utilizado exclusivamente para financiar los gastos de movilización e iniciación del Proyecto y no será aplicado a pagar deudas pasadas del Contratista ni a cubrir gastos del Proyecto hechos anteriormente a la adjudicación del Contrato ni a la compra de equipo o materiales a ser incorporados en la obra. El uso de este pago deberá ser comprobado con documentos entregados al Ingeniero.

3.- El Anticipo será autorizado por el Contratante después de que el Contratista haya firmado el Contrato y entregado las fianzas o garantías de Cumplimiento y Pago, además de una fianza o garantía especial por el valor del Anticipo, según lo requieren las leyes de la República (En Proyectos del Sector Público).

4.- El Anticipo será autorizado por el Contratante para ser entregado en su totalidad y no estará sujeto a la Retención Ordinaria aplicable a los pagos parciales. Su valor podrá ser fijado por el Contratante en las CEC o cotizado por el Contratista en su Oferta y, a menos que las CEC lo determinen de otra manera nunca podrá exceder al 10% del Valor Original del Contrato. El reembolso del Anticipo será efectuado por medio de deducciones (adicionales a la Retención Ordinaria) en los pagos parciales hechos al Contratista, de sumas equivalentes al porcentaje del Anticipo con respecto al Valor Total Original del Contrato, hasta completar la suma total anticipada.

2.1.7.11. Sección 110.12: Tipos de cambios Monetarios

A menos que las CEC lo dispusieran de otra manera, los pagos al Contratista serán hechos en Córdobas por medio de cheques entregados por el Contratante.

El Contratante, (en proyectos del Sector Público) no reconocerá ningún ajuste en los precios del Contrato por razones de "deslizamiento" del Córdoba con respecto al dólar de los Estados Unidos o cualquier otra moneda extranjera. En proyectos del Sector Privado, las CEC indicarán si habrá o no habrá reconocimiento de ajuste por esta causa.

2.1.7.12. Sección 110.13: Escalamiento de Precios

(a) Los precios serán fijados durante el plazo del Contrato, a menos que en las CEC se establezca que sean ajustable por escalamiento de precios.

(b) Los ajustes, por escalamiento de precios, una vez que hayan sido justificados, podrán ser hechos, a solicitud del Contratista, de conformidad con las siguientes disposiciones:

1.- Mano de Obra.- Los salarios y prestaciones sociales que el Contratista pague a sus empleados, no deberán ser más bajos del Mínimo establecido por el MITRAB para cada oficio. Si las CEC no incluyeran una Lista Básica de Salarios Mínimos aceptables para el Proyecto, el Contratista anexará a su Oferta la lista de salarios básicos y prestaciones sociales que haya usado en la determinación de sus costos.

1.1_ El Contratante reembolsará al Contratista todo aumento en el costo de las obras que resultara por causa de nuevas leyes o disposiciones del Gobierno que aumentaran los salarios o las prestaciones sociales de los trabajadores y que hayan entrado en vigencia en fecha posterior a la de presentación de las ofertas;

1.2) El Contratante no reembolsará al Contratista ningún aumento en el costo de las obras por causa de un uso inadecuado o negligente de la mano de obra en la ejecución de los trabajos;

1.3) El Contratista entregará al Ingeniero regularmente (fuera de la documentación exigida para los Trabajos por Administración), copia fiel de las planillas de pago de salarios y prestaciones sociales para todo el personal que labora para el Proyecto. Esto lo hará, a más tardar, TRES (3) días después de la fecha del pago; el Contratista certificará que dichas planillas son completas y correctas;

1.4) Para los fines de ajustes en los precios del Contrato, por las causas antes señaladas, el Contratista entregará al Ingeniero, no menos de TRES (3) días antes de la Reunión de Preconstrucción, un análisis de los precios en que determine el número de hombre-horas por cada oficios que interviene en cada unidad de cada uno de los conceptos de trabajo. El ajuste será aplicado a las cantidades de obra aún pendientes de ejecución cuando se produzca un aumento.

2.- Materiales.- El Contratante reconocerá los aumentos por inflación en el precio de los materiales a ser usados exclusivamente en la construcción de la obra, siempre que se compruebe que tales aumentos se produjeron posteriormente a la fecha de entrega de la oferta. Para ello:

2.1) El Contratista entregará, junto con su oferta, una lista de los materiales necesarios para la construcción, incluyendo los que serán incorporados en la obra y los que serán utilizados en las operaciones de construcción. La lista contendrá la fecha, la descripción, cantidad, precios unitarios, nombre y dirección de los suplidores, facturas pro-forma y tiempo de entrega de cada uno de los materiales;

2.2) El Contratista, en el Análisis de Precios a que se hace referencia en el párrafo 1.4) de este artículo, justificará el uso de los materiales de la lista y su calidad y cantidad. Asimismo, demostrará que no es posible obtener los mismos materiales, de calidad aprobada, por medio de otro suplidor o manufacturero;

2.3) El ajuste de precios será aplicado únicamente a las cantidades de materiales que no estuvieran adquiridos en la fecha en que se produjera el aumento en precios, si la demora en la adquisición no fuera atribuible a negligencia u otra deficiencia del Contratista o de sus subcontratistas, y no será aplicado a aquellos materiales que no sean usados exclusivamente en el Proyecto.

3.- Equipo.- No será reconocido ningún ajuste en el precio del Contrato por escalamiento en el precio del equipo, incluyendo accesorios y herramientas menores; sin embargo, se harán ajustes por escalamiento en el precio de los combustibles y lubricantes, considerados como “materiales”.

4.- Varios.-

4.1) Todo ajuste en el precio para un determinado concepto de trabajo, estará restringido a los casos en que el aumento total final comprobado no sea menor del 5% del total que aparece en la oferta para ese concepto;

4.2) En ningún caso será efectuado un ajuste en el precio de Contrato de un determinado concepto de pago, cuando el valor total final comprobado de dicho aumento sea inferior al 0.1% del Valor Total Original del Contrato;

4.3) No será efectuado ningún ajuste en el Valor del Contrato, por razones de escalamiento de precios, cuando el plazo total del Contrato sea igual o inferior a 180 días calendario, a menos que las CEC lo estipularan de otra manera;

4.4) En el caso de producirse un aumento en los precios de la mano de obra o de los materiales, el Contratista notificará por escrito al Ingeniero tal evento, a más tardar, TRES (3) días después de haberse producido, incluyendo la documentación que lo demuestre, el dato de los nuevos precios, las cantidades y tipo de mano de obra o materiales que serán afectadas por el aumento y el monto total estimado del ajuste. El Contratante estudiará la documentación, hará las investigaciones necesarias y verificará las cantidades de mano de obra o materiales afectados y el monto del ajuste reclamado. Si comprueba el aumento y el verdadero monto del ajuste, el Contratante pagará mensualmente las sumas ajustadas correspondientes al uso hecho de la mano de obra o de los materiales durante el período;

4.5) El Contratante podrá, en caso de que, posteriormente a la fecha de presentación de las ofertas, se produjera una disminución en los precios de la mano de obra o de los materiales, aplicar una disminución en el precio de los conceptos de obra afectados. Tal ajuste sería efectuado de conformidad con las mismas disposiciones aplicables a los aumentos;

4.6) El Contratante no aprobará ningún ajuste en el valor de las obras contratadas, por aumento en los precios de mano de obra o materiales, si los aumentos ocurren después de haber expirado el plazo original o el plazo ampliado para la conclusión de las mismas.

4.7) Si el Contratante considera conveniente a sus intereses y los de la obra, entonces, incluirá en el Pliego de Licitación, una suma estimada para compensar el escalamiento en los costos del Contrato; sin embargo, esta compensación se hará efectiva solamente si el Contratista puede demostrar la ocurrencia real del escalamiento.

4.8) El ajuste en el Valor del Contrato, en caso de que esté considerado el ajuste por escalamiento de precios, podrá ser determinado mediante fórmulas polinómicas indicadas en las CEC, tanto para la parte en moneda nacional como para la parte en moneda extranjera, si esta última estuviera autorizada en las CEC.

2.1.7.13. Sección 110.13: Cambios en las Leyes y Reglamentos

(a) A excepción de los cambios en las leyes o reglamentos que pudieran alterar fundamentalmente la equidad del Contrato y ocasionar una pérdida manifiesta para el Contratista, imprevisible en la fecha de envío de la oferta, solamente los cambios en la legislación o reglamentación del país podrán tomarse en cuenta para modificar las condiciones financieras del Contrato.

(b) Se tomarán en cuenta casos de modificaciones de cualquier ley, decreto, reglamento o circular de la República que sea de carácter obligatorio (exceptuadas las modificaciones a las leyes fiscales o similares que se rigen por el Artículo-108.02 de estas CGC, y que causen para el Contratista un aumento o una reducción del costo de ejecución de los trabajos no tomados en cuenta en las demás disposiciones del Contrato, que sea igual por lo menos al uno (1) por ciento del valor del Contrato sólo por esta causa). En tales casos, se convendrá un Acuerdo Suplementario entre las partes, a fin de formalizar el aumento o disminución, según fuere el caso, del valor del Contrato. En caso de que las partes no puedan ponerse de acuerdo acerca de los términos del Acuerdo Suplementario en un plazo de treinta (30) días calendario, contados a partir de la fecha de la propuesta de Acuerdo enviada por una de las partes a la otra, se aplicarán las disposiciones del CGC.

2.1.8. OTROS ARTÍCULOS A LOS QUE SE HACE REFERENCIA

2.1.8.1. Sección 103.03: El Pliego de Bases y Condiciones o Documentos de Licitación y Contratación (DLC)

Sección VI- Especificaciones:

1 - Pliego de Licitación.

2 - Especificaciones Técnicas (Divisiones II y III de las NIC-2000).

3 - Normas Ambientales Básicas para la Construcción Vial (NABCV)

4 - Especificaciones Técnicas Suplementarias.

5 - Especificaciones Especiales (para el Contrato).

6 - Planos.

7 - Otros.

2.1.8.2. Sección 103.05: Conocimiento Obligatorio de los Documentos de Licitación y Contratación y de las Condiciones que Afectan al Trabajo

1.- Conocimiento Obligatorio de los Documentos de Licitación y Contratación.- El Contratante ha preparado planos y especificaciones que describen la obra propuesta, los trabajos a realizar, los materiales requeridos y los posibles métodos constructivos aceptables para completar satisfactoriamente la construcción. Estos documentos van, además, acompañados de otros que contienen todas las condiciones bajo las cuales será administrado el Contrato y las instrucciones relativas a la presentación de ofertas y adjudicación de

contratos. Es obligación de todo Oferente estudiar detenidamente y a conciencia todos estos documentos ANTES de someter su oferta y pedir oportunamente y por escrito al Contratante, las aclaraciones e interpretaciones que considere necesarias así como la corrección de errores y omisiones por él detectadas en dichos documentos.

1.1) Datos del Subsuelo y de Materiales.- Cuando se disponga de información sobre las condiciones del subsuelo o sobre otros aspectos del Proyecto que puedan interesar a los Oferentes esta será puesta a su orden para su examen o estudio. La Convocatoria indicará qué tipo de información está disponible y el lugar en que los Oferentes podrán examinarla. Esta información podrá incluir datos geofísicos, tales como sismicidad o resistividad y sus interpretaciones. Sobre el particular se advierte a los Oferentes que las interpretaciones de datos geofísicos se basan en opiniones y criterios especializados y se les recomienda encargar a expertos calificados en este campo técnico para que evalúen independientemente dichos datos antes de ser usados en la preparación de la oferta, y que los informes sobre investigaciones del subsuelo no son parte del Contrato.

Obstáculos y Condiciones Físicas Adversas

No obstante, si durante la ejecución de las Obras, El Contratista se encontrase con obstáculos físicos o condiciones físicas o del subsuelo no esperadas, o con condiciones climatológicas en el Sitio, o cualquier evento o circunstancia que en su opinión, no eran previsibles por el Contratista. El Contratista lo notificará de inmediato y por escrito al Ingeniero, enviando una copia a El Dueño. Al recibir tal notificación, El Ingeniero, si en su opinión dichos obstáculos o condiciones no podrían haber sido razonablemente previstas por el contratista, deberá determinar, la prorroga a que tiene derecho El Contratista, el importe de cualquier gasto en que pueda haber incurrido

El Contratista, a causa de la aparición de dichos obstáculos o condiciones, que se adicionara al Precio Contractual, esto deberá ser notificado a El Contratista, con una copia para el Dueño.

Dicha determinación tendrá en cuenta las instrucciones que El Ingeniero pueda dictarle a El Contratista al respecto y cualquier otra medida, adecuada y razonable, que El Contratista haya podido adoptar a falta de instrucciones específicas de El Ingeniero y que este considerase aceptable.

2.- Condiciones que Afectan al Trabajo.- El probable Oferente deberá inspeccionar por sus propios medios el lugar de la construcción y sus vecindades y familiarizarse con todas las condiciones topográficas existentes y con las características climatológicas, de suelos y otros materiales así como de las condiciones generales y locales que puedan afectar al costo de los trabajos. La omisión de este paso por parte del Oferente no lo relevará de la responsabilidad de estimar adecuadamente las dificultades y el costo de la ejecución satisfactoria del trabajo.

El Contratante organizará, con bastante anterioridad a la apertura de las ofertas, viajes de inspección con carácter obligatorio para mostrar a los posibles Oferentes, el lugar de la obra, incluyendo yacimientos de materiales, condiciones ambientales y otros aspectos de interés. La fecha y horas de esas inspecciones serán hechas del conocimiento de todos los posibles Oferentes que se inscriban con tal objeto.

El Contratante no asume responsabilidad alguna por cualquier opinión, afirmación o suposición que sobre las condiciones que afectan al trabajo haga cualquiera de sus representantes antes de la presentación de las ofertas, a menos que estuviera incluida en la Convocatoria, especificaciones o cualquier otro documento de licitación.

3.- Evidencia de Cumplimiento.- La simple presentación de la oferta constituirá para el Contratante evidencia suficiente de que el Oferente ha estudiado y conoce a plenitud y perfectamente los DLC, y las condiciones que encontrará en el lugar en cuanto al clima y al tipo, calidad y cantidad del trabajo a ser ejecutado y las características relacionadas con la protección del medio ambiente y los recursos naturales.

2.1.8.3. Sección 103.07: Interpretación de las Cantidades Mostradas en el Pliego de Licitación

Las cantidades mostradas en el Pliego de Licitación son aproximaciones a las cantidades reales y se muestran para poder comparar las ofertas recibidas. El Contratista recibirá pago con base en las cantidades reales del trabajo efectuado y aceptado, o por los materiales suministrados de acuerdo con el Contrato. Las cantidades individuales de trabajo indicadas en el Pliego pueden aumentar o disminuir, o aun ser suprimidas, según se estipula en otra parte de estas especificaciones. Las cantidades mostradas en el Pliego de Licitación serán consideradas como las "cantidades originales del Contrato".

2.1.8.4. Sección 106.08: Gastos

Todos los gastos en que incurran los Oferentes con motivo de la licitación serán hechos por su propia cuenta y no serán reembolsados aunque a la postre sus Ofertas no resultaren aceptadas.

2.1.8.5. Sección 106.02: Planos y Dibujos de Trabajo

Los planos del Proyecto suministrados por el Contratante son de naturaleza general y mostrarán los límites de la construcción, el alineamientos horizontal y vertical de la vía, las pendientes de los taludes, las pendientes del drenaje, las secciones transversales típicas, la ubicación y diseño de todas las estructuras, y un resumen de todos los conceptos de pago que aparecen en la Oferta o Pliego de Licitación. . Los planos para puentes mostrarán el arreglo y características generales y aquellos detalles necesarios para la preparación de dibujos de trabajo, de taller o de fabricación.

Los planos serán suplementados mediante los dibujos de trabajo o de taller en la cantidad que fuere necesaria. Tales dibujos serán preparados y suministrados por el Contratista. En ellos se proveerá toda la información detallada necesaria para la fabricación y erección de obras de fábrica (acero estructural, elementos prefabricados, etc.), la erección de obra falsa y andamios, la construcción de ataguías y puentes provisionales y cualquier otro trabajo o detalle constructivo que no aparezca en los planos del Proyecto y para los cuales sean necesarios tales dibujos, a fin de controlar mejor el trabajo. Todos los dibujos de trabajo o de taller deberán ser aprobados por el Ingeniero antes de comenzar la construcción de las obras correspondientes. Tal aprobación en forma alguna eximirá la plena responsabilidad del Contratista sobre la construcción satisfactoria de las obras de conformidad con el Contrato. El Contratista será responsable por la exactitud de las dimensiones y detalles y por la concordancia de dichos dibujos con los planos y especificaciones contractuales.

El Contratista suministrará al Ingeniero, para su examen y aprobación, cuatro (4) copias de cada dibujo, diez (10) días antes del comienzo de la obra correspondiente, a menos que las CEC lo dispongan de otra manera. Estos dibujos serán presentados en hojas que no excedan de 55.9cmx91.4 cm. El Ingeniero los examinará y devolverá al Contratista una de las copias, con las anotaciones que indiquen los cambios o modificaciones requeridas. El Ingeniero no aprobará los dibujos hasta que todos los cambios o modificaciones requeridas hayan sido incorporados en los mismos. Después de haber cumplido con este requisito, el Contratista entregará al Ingeniero cuatro (4) juegos adicionales. Una copia de los dibujos aprobados le será devuelta al Contratista. Mientras estos dibujos no hayan sido aprobados por el Ingeniero, cualquier trabajo hecho o materiales ordenados para la estructura respectiva, serán de la entera responsabilidad del Contratista.

El costo de preparación y presentación de dibujos de trabajo o de taller se considerará incluido dentro de los precios unitarios o globales correspondientes a los varios conceptos de pago del Contrato.

2.1.8.6. Sección 106.04: Documentos Constitutivos del Contrato.

A. Los documentos contractuales firmados por las partes y que forman parte integral del Contrato, son los siguientes:

(a) Formulario del Contrato;

(b) Condiciones Especiales del Contrato (CEC)

(c) Documentación Técnica que contiene la descripción de las obras y las Especificaciones Técnicas;

(d) Cuando se citen como documentos contractuales en las CEC: planos, memorias de cálculo, especificaciones de perforaciones necesarias o resultados de perforaciones ejecutadas y documentación geotécnica, el desglose y los análisis de los precios unitarios y de suma global;

(e) Pliego de Licitación;

(g) Las Condiciones Generales del Contrato (CCGC), y

Los documentos que forman parte del Contrato deberán ser considerados como mutuamente explicativos; en caso de contradicción o diferencia entre los documentos que forman parte integral del Contrato, la prioridad de los mismos será según el orden arriba enumerado.

El Contratista no deberá aprovecharse de errores u omisiones en los planos o en las especificaciones. En caso de que el Contratista descubriese tales errores u omisiones deberá notificar inmediatamente al Ingeniero. Este hará las correcciones e interpretaciones que considere necesarias para cumplir con la intención de los planos y especificaciones.

También quedará entendido que toda falta u omisión en los planos, especificaciones o CEC en relación con cualquier detalle, o descripción detallada sobre cierto aspecto, serán interpretados en el sentido de que prevalecerá la mejor práctica general de ingeniería y que sólo serán empleados materiales y ejecución de primera calidad. Toda interpretación de las especificaciones deberá ser hecha con base en este criterio.

B. Documentos Contractuales posteriores a la formalización del Contrato.- El Contrato, una vez formalizado, podrá modificarse sólo mediante convenios escritos sometidos al mismo procedimiento de aprobación que el Contrato. Este será conocido como Acuerdo Suplementario, será elaborado por el Contratista, autorizado por el Ingeniero y aprobado por el Contratante. Se entenderá por modificación todo cambio que no rebase los límites máximos establecidos para la aplicación de los términos del Contrato o de la reglamentación vigente cuyas modificaciones están, si es el caso, tomadas en cuenta bajo las condiciones previstas en el Artículo-110.13 de estas CGC.

2.1.8.7. Sección 106.09: Designación del Ingeniero

Cada proyecto tendrá un Ingeniero designado como representante del Contratante, con autoridad para lo descrito en el Artículo 106.01 de estas CGC. El Contratista será notificado, antes de la iniciación de los trabajos, sobre el nombramiento del Ingeniero. El Ingeniero y el Representante del Ingeniero tendrán calificaciones al menos similares a las exigidas para el Superintendente del contratista.

2.1.8.8. Sección 106.17: Reclamos por Ajustes-Controversias-Arbitramento

2.- Controversias.- En caso de controversias entre el Contratista y el Ingeniero con respecto a cualquier disposición del Contrato, se aplicarán y prevalecerán las siguientes regulaciones:

A.- Caso de Proyectos del Gobierno Central, Entes Descentralizados o Autónomos y Municipalidades.

1.- Exceptuando lo dispuesto en otra forma en el Contrato, cualquier controversia relacionada con un asunto de hecho que surgiere bajo sus disposiciones y sobre el cual no se alcance un acuerdo en el campo directamente con el Ingeniero, será resuelta por el Director de la Unidad Ejecutora o Coordinadora del Programa correspondiente al Proyecto de la Institución Contratante; el Director decidirá por escrito, con prontitud razonable y su decisión la enviará al Contratista por correo o le suministrará en cualquier otra forma, una copia de la misma.

Si lo solicita el Contratista, la decisión del Director de la Unidad Ejecutora o Coordinadora será revisada por el Director de la instancia inmediatamente superior, quien emitirá su resolución por escrito dentro de los QUINCE (15) días siguientes a la solicitud del Contratista para que se revisara el caso. Si el Contratista no quedara satisfecho con esta decisión, podrá apelar ante la máxima autoridad de la Institución Contratante, quien emitirá su resolución dentro de los TREINTA (30) días siguientes y la comunicará por escrito al Contratista. Si éste no quedare aún satisfecho con la decisión, podrá invocar y acogerse a las disposiciones de este artículo en nota dirigida a la máxima autoridad del Contratante, solicitando el arbitramento de la controversia.

La institución Contratante designará en las CEC, las instancias ante las cuales podrá apelar el Contratista.

B.- Caso de Instituciones no Incluidas en el Gobierno Central.

Cada institución establecerá sus propias reglas para dirimir controversias, pero ajustándose a las Leyes de la República, si no adopta el procedimiento propuesto en estas CGC. El procedimiento a seguir lo establecerá el Contratante en las CEC.

C.- Caso del Sector Privado.

Las empresas o instituciones del sector privado, tales como Concesionarios, Organizaciones no Gubernamentales y otras, pueden seguir el procedimiento propuesto en estas CGC o establecer un procedimiento propio, siempre que se ajuste a la Ley.

3.- Arbitramento.-

3.1) Para los fines del Arbitramento, tanto el Contratante como el Contratista designarán a un Arbitrador de su confianza, si no fuera posible seleccionar a un sólo Arbitrador que decida por ambos. A su vez, los dos Arbitradores designarán a un tercer Arbitrador con el objeto de que dirima las discordias que pudieran surgir entre ambos en el curso de las discusiones y, en último caso, para que dirima unipersonalmente la controversia, si los dos Arbitradores iniciales no lograran alcanzar una decisión. Los Arbitradores tomarán posesión de sus cargos ante un Notario Público o ante un Juzgado competente para lo Civil.

3.2) Cada una de las partes en controversia preparará una exposición concisa y clara de los hechos y deberá acompañar la documentación de soporte que crea conveniente y la que sea solicitada por los Arbitradores. Cada uno de los Arbitradores deberá recibir una copia de estas exposiciones dentro de los SIETE (7) días siguientes a la toma de posesión de sus cargos. Los dos Arbitradores estudiarán la documentación y celebrarán reuniones en las fechas, horas y lugares en que convengan, incluso el sitio de las obras si fuere necesario.

Tendrán derecho a solicitar la actuación del Tercer Arbitrador en cualquier oportunidad. Levantarán y firmarán un Acta de cada reunión con la descripción de los asuntos discutidos.

El fallo o Laudo Arbitral deberá producirse dentro de un plazo de TREINTA (30) días a partir de la toma de posesión de sus cargos, concluyendo la intervención conciliadora o dirimente del Tercer Arbitrador.

Tratándose, como es el caso, de una controversia de índole técnica, en otras palabras, "de hechos" y no "de derechos", la decisión final de los Arbitradores será sin forma ni figura de juicio, según su leal saber y entender, obedeciendo únicamente a lo que su criterio, experiencia, ética profesional y espíritu de equidad les dicten. El Laudo Arbitral especificará las condenas y liquidaciones que resulten del análisis y que fueren necesarias para resolver en forma definitiva la controversia.

3.3) Las calidades personales y profesionales que deberán reunir los Arbitradores serán las siguientes:

3.3.1) Ser profesionales de la Ingeniería, graduados y con la suficiente experiencia y capacidad en el campo del diseño, construcción y supervisión de obras, preferiblemente del tipo vial;

3.3.2) Gozar de buena reputación profesional;

3.3.3) No estar involucrado, directa ni indirectamente, en el asunto bajo controversia; en otras palabras, que no haya conflicto de intereses que puedan influir en su decisión.

3.4) La parte que recurra al Arbitramento deberá depositar ante el Notario Público o en el Juzgado ante el cual hayan tomado posesión los

Arbitradores, el Monto Total de los honorarios de los Arbitradores, valor que será determinado de acuerdo al monto total de lo reclamado, según el Cuadro 106-3 y que será repartido por partes iguales entre ellos.

CUADRO 106-3
TARIFAS DE HONORARIOS PARA ARBITRAMENTO
(No incluye gastos)

Monto Reclamado en Córdobas	Tarifa Fija	Más el % Indicado:	Sobre lo Reclamado en Exceso de:
Hasta 100,000	6,000	.....	.....
De 100,001 a 500,000	6,000	4.0	100,000
Más de 500,000	10,000	3.0	500,000

Los honorarios de los Arbitradores serán costeados por la parte perdedora en caso de que el fallo sea totalmente en su contra. Si el fallo es dividido, los arbitradores determinarán el monto de honorarios que le corresponderá pagar a cada una de las partes en controversia.

3.5) Queda convenido entre el Contratante y el Contratista que al recurrir al Arbitramento como medio de dirimir una controversia de índole técnica, no habrá otro recurso de apelación contra el Laudo Arbitral y que ambas partes aceptarán y acatarán esa decisión como definitiva y que no estará sujeta ni siquiera al recurso extraordinario de CASACIÓN. Que la ejecución de la sentencia será pedida ante el mismo Notario Público o Juez ante quien hubieren tomado posesión los arbitradores, quien emitirá el Certificado Legal de la misma.

3.6) Si, antes de que los arbitradores emitan su fallo, dentro del plazo antes mencionado, las partes en conflicto llegaran directamente a un acuerdo mutuo sobre la controversia, independientemente de los arbitradores, harán constar su acuerdo por escrito en un Acta firmada por ambas partes y por los arbitradores. Los honorarios de los arbitradores serán pagados en su totalidad.

3.7) Los trámites del arbitramento no darán lugar a la suspensión o atraso, ni siquiera parcialmente, de la ejecución de los trabajos objeto del Contrato. La demanda de resolución de una controversia por medio de arbitramento, será presentada por la parte que decida acogerse a las disposiciones de este artículo, en nota escrita entregada por la otra parte; pero, bajo ninguna circunstancia ni pretexto se procederá a ese trámite si esa nota es entregada después de la fecha de Liquidación Final del Contrato, excepto que en la Convocatoria o en las CEC hubiera alguna salvedad al respecto.

3. DIVISIÓN II: ESPECIFICACIONES TÉCNICAS (DETALLES DE CONSTRUCCIÓN)

3.1. SUBDIVISIÓN 200: MOVIMIENTO DE TIERRA

3.1.1. SECCIÓN 201: ABRA Y DESTRONQUE

3.1.1.1. Sección 201.01: Descripción

Este trabajo consistirá en la tala, desenraice, destronque, remoción y desecho de toda vegetación, basura, desperdicios y del material objetable existentes dentro de los límites designados del camino o calle, de las áreas de construcción de puentes, de las vías de acceso, de los yacimientos de materiales de construcción y de todas las otras áreas que sean designadas por el Ingeniero, con excepción de aquellos árboles, obstrucciones u objetos que estén destinados a quedar en su sitio o a ser removidos de conformidad con lo estipulado en otras secciones de estas especificaciones. Este trabajo también incluirá la protección contra daños y desfiguración de la vegetación u objetos destinados a permanecer en el sitio.

Debe entenderse que habrá áreas del Proyecto en que sólo se necesitará hacer el Abra; otras en que sólo se hará Destronque y otras en que se efectuarán ambas operaciones, según lo indiquen los planos o el Ingeniero, pero el Concepto de Pago será designado como Abra y Destronque.

El abra y destronque será llevado a efecto con anticipación a las operaciones de excavación y movimiento de tierras y de acuerdo con los requisitos estipulados en estas especificaciones.

3.1.1.2. Sección 201.02: Requisitos para la Construcción: Generalidades

A menos que esté especificado de otra manera en las CEC o mostrado en los planos, el abra y destronque será efectuada en toda la longitud del Proyecto en los anchos especificados más adelante en esta sección. No será pagado ningún trabajo de abra y destronque efectuado fuera de estos límites, a menos que el Ingeniero lo haya autorizado. El Ingeniero designará y marcará los árboles, arbustos, plantas y objetos que no vayan a ser alterados y que el Contratista deberá preservar.

Con el fin de disminuir los daños a los árboles que quedarán en pie, los árboles a talar deberán ser tumbados hacia el centro del área que se esté despejando, si así lo ordena el Ingeniero. A los árboles y arbustos que vayan a ser conservados y que sufran cortes o descascaramientos, se les aplicará en las superficies afectadas una pintura aprobada de base asfáltica especial para poda de árboles (Ver Artículo-1013.08 h).

Siempre que sea necesario, los árboles serán cortados en secciones de arriba hacia abajo, con el fin de evitar daños a estructuras, otros árboles, propiedades aledañas, trabajadores o el público en general.

3.1.1.3. Sección 201.03: Abra y destronque

(1) Limites Horizontales.- El terreno será despejado de todos los objetos superficiales, árboles, troncos, raíces, obstrucciones (incluyendo concreto, mampostería, piedra, chatarra y cosas similares que no estén calificadas como estructuras u obstrucciones a ser removidas bajo la Sección 202) que sobresalgan del mismo y que no estén designados para quedar en su sitio. Estas operaciones serán efectuadas dentro de los siguientes límites:

1.1) Áreas de construcción de la vía, incluyendo estructuras, caminos o calles marginales, rampas, accesos, zanjas y canales con ancho en el fondo de 3.60 metros o más, y todo otro camino o calle accesoria y conexiones a ser construidas. Tales áreas se extenderán hasta un ancho de 1.50 metros hacia afuera de las estructuras y del pie de los taludes de excavaciones y terraplenes, exceptuando los casos en que los taludes vayan a ser redondeados, en los cuales estas áreas serán extendidas hasta los límites exteriores del redondeo;

1.2) Zanjas y canales que tengan un ancho en el fondo de menos de 3.60 metros. Tales áreas serán extendidas hasta un ancho de 50 centímetros más allá de la línea de quiebre del talud;

1.3) Áreas de yacimientos de materiales de construcción existentes dentro del Derecho de Vía;

1.4) Áreas encerradas por lazos y rampas de intercambios de tráfico.

(2) Límites Verticales.

2.1) No será necesario remover troncos ni raíces ya existentes que no hayan sido alterados ni objetos sólidos no perecederos que vayan a quedar a un mínimo de noventa centímetros (90 cm.) por debajo de la subrasante o taludes terminados;

2.2) En áreas situadas fuera de los límites de excavación y de terraplenado, todo tronco u objeto sólido no perecedero, será recortado a no más de quince centímetros (15 cm.) sobre la superficie del terreno natural o del nivel de aguas mínimas;

2.3) En áreas en que va a ser redondeada la parte alta del talud de cortes, los troncos serán recortados al ras o por debajo de la superficie final del talud.

2.4) El destronque de bancos de préstamo, cambios de cauce y zanjas será necesario solamente hasta la profundidad requerida dentro de dichas áreas.

Excepto en áreas a ser excavadas, los hoyos y depresiones resultantes de la extracción de troncos y obstrucciones, deberán ser rellenados y compactados de conformidad con el Artículo-203.11 de estas especificaciones.

Cuando la vía vaya a ser construida a través de áreas cultivadas y la cosecha de los productos vegetales pueda ser realizada sin ocasionar atrasos extraordinarios al Contratista, éste deberá reprogramar sus operaciones a fin de dar tiempo al propietario de las plantaciones para cosechar. Si esto va a ocasionar atrasos indebidos y costos adicionales al Contratante o al Contratista, a juicio del Ingeniero, no habrá espera y el Contratista hará el abra y destronque de acuerdo con los procedimientos aquí establecidos. Las indemnizaciones a que hubiere lugar serán costeadas oportunamente por el Contratante.

Se deberá evitar, en todo lo posible, la quema de materiales resultantes del Abra y Destronque, pero, si hay necesidad de quemar material perecedero y lo aprueba el Ingeniero, la operación deberá estar bajo la dirección y cuido constante de un vigilante competente y realizada siempre de tal manera que la vegetación aledaña, las propiedades adyacentes o toda cosa que esté designada a permanecer dentro del Derecho de Vía, no resulte perjudicada. Si la quema de materiales fuera permitida deberá ser efectuada de conformidad con las disposiciones del Artículo-108.19 de estas especificaciones.

En toda quema el Contratista deberá hacer uso de procedimientos de quema de alta intensidad (es decir, incineradores, montones elevados, quema en hoyos y zanjas con aire forzado, etc.) que producen un quemado intenso con pequeña o poco visible emisión de humo durante el proceso de quema. A la conclusión de cada sesión de quemado, el fuego deberá ser completamente extinguido de tal manera que no queden escombros ardiendo.

En caso de que el Ingeniero dé instrucciones al Contratista de no comenzar operaciones de quema, o de suspender tales operaciones debido a condiciones atmosféricas peligrosas, el material a ser quemado que estorbe subsiguientes operaciones de construcción, será acarreado por el Contratista a lugares provisionales, donde no estorbe dichas operaciones, y posteriormente, si así lo dispone el Ingeniero, será trasladado a un lugar designado donde será quemado.

Aquellos materiales y escombros que no puedan ser quemados y los materiales perecederos, podrán ser eliminados por métodos y en lugares aprobados por el Ingeniero, dentro del Proyecto o fuera de él. Si la eliminación es por entierro, los escombros deberán ser colocados en capas con el material distribuido de tal manera que se evite la formación de bolsas. Cada capa de éstas será cubierta o mezclada con tierra según el método conocido como relleno sanitario, tratando de que queden llenos todos los vacíos. La capa superior de material enterrado deberá quedar cubierta, por lo menos, con treinta centímetros (30 cm.) de tierra u otro material aprobado y deberá ser nivelada, conformada y compactada en forma tal que presente una apariencia agradable.

Si el sitio de desecho se encuentra fuera de la obra, el Contratista deberá hacer todos los arreglos legales necesarios con los dueños de las propiedades, por escrito, para obtener lugares apropiados que estén fuera del alcance de la vista del Proyecto. El costo involucrado será subsidiario de los otros conceptos de pago. Una copia de tales acuerdos será entregada al Ingeniero.

Si así está dispuesto en las CEC, las áreas de desecho deberán ser sembradas, fertilizadas y cubiertas con paja, estiércol, hojas, etc., para su protección, de acuerdo con la Sección-915 de estas especificaciones.

El material leñoso podrá ser desechado por astillamiento. Las astillas de madera pueden ser utilizadas para recubrir las áreas de desecho, control de erosión de taludes, o pueden ser esparcidas uniformemente sobre áreas seleccionadas de acuerdo con indicaciones del Ingeniero.

Toda madera comerciable que se encuentre dentro de la zona a ser despejada que no haya sido removida del Derecho de Vía con anterioridad al comienzo de la construcción, pasará a ser propiedad del Contratista, a menos que se hubiese estipulado de otra manera.

En caso de que en los contratos de adquisición del Derecho de Vía, el Contratante hubiese otorgado a los propietarios del terreno el derecho de propiedad de los árboles utilizables dentro del área cedida, tales arreglos tendrán precedencia sobre el derecho del

Contratista establecido en el párrafo anterior. El Ingeniero notificará al Contratista la existencia de tales compromisos.

Las ramas bajas colgantes, así como aquellas enfermas o de mal aspecto, en árboles o arbustos que han sido designados para quedar en su lugar, deberán ser podadas de acuerdo con las NABCV y las instrucciones del Ingeniero. Las ramas de árboles que se extiendan sobre la calzada de la vía, deberán ser podadas a fin de que dejen una altura libre de seis metros (6.00 m.) sobre la superficie de la calzada mencionada. La poda deberá ser hecha por obreros especializados y de conformidad con prácticas aprobadas.

Los árboles que sean removidas con base en pago individual deberán ser cortados, lo más que se pueda, al ras del terreno, sin eliminar los tocones, a menos que lo dispongan de otro modo las CEC.

3.1.1.4. Sección 201.04: Descortezado (destape)

El Contratista descortezará las zonas indicadas en los planos, o indicadas por el Ingeniero, donde se vaya a hacer una excavación o un terraplén, excepto que no será necesario quitar el césped cortado cuando se vaya a construir un terraplén de más de un metro y cincuenta centímetros (1.50 cm) de altura. El descortezado incluye la remoción de la superficie del terreno de materiales tales como maleza, raíces, césped, tierra vegetal, restos de cosechas agrícolas, aserrín y materiales vegetales descompuestos.

En yacimientos y bancos de préstamo, además del abra y destronque que fuere necesario, se realizará el descortezado del área de donde se va a extraer el material a usar en la obra. En estos casos, la profundidad del descortezado o "destape" será la necesaria para eliminar todo material inaceptable, tomando en cuenta que habrá que acopiar en un sitio aprobado el material que servirá posteriormente (incluyendo el material vegetativo) para restaurar el área excavada del yacimiento o banco, cuando lo apruebe u ordene el Ingeniero. El descortezado o "destape" de yacimientos o bancos de materiales será compensado directamente, si aparece el concepto de pago correspondiente en el Pliego de Licitación.

3.1.1.5. Sección 201.05: Eliminación de Setos

Estos deberán ser arrancados o desarraigados en tal forma que se asegure su eliminación completa y permanente. Los arbustos dispersos, no clasificados como setos deberán ser eliminados en igual forma que la especificada para los setos.

3.1.1.6. Sección 201.06: Aceptación

El Abra y Destronque será evaluada visualmente (Artículo-106.12).

El material para curar heridas de árboles será evaluado mediante certificados del Fabricante (Artículo-106.12).

El rellenado y compactación serán evaluados bajo la Sección-207.

3.1.1.7. Sección 201.07: Método de Medición

La medición se efectuará por medio de uno o más de los siguientes métodos alternativos:

(1) Con Base en el Área. El trabajo por el cual se pagará será el número de hectáreas y fracciones aceptablemente despejadas, destroncadas o en que se hayan hecho ambas operaciones dentro de los límites indicados en los planos, o marcado mediante estaqueo por el Ingeniero en el campo.

Las áreas que no estén mostradas en los planos dentro de los límites del abra y destronque y que no sean marcadas en el campo por el Ingeniero, no serán medidas para fines de pago.

El descortezado será medido en hectáreas.

(2) Con Base en Suma Global. Cuando el Pliego de Licitación indique que el Abra y Destronque será pagada con base en una Suma Global, no se medirá el área para fines de pago.

(3) Con Base Lineal. Cuando el Pliego de Licitación considere el pago de este concepto por unidad lineal, la medida será hecha a lo largo de la línea central de la vía en construcción, en estaciones de veinte metros (20 metros), o en kilómetros.

La medición de setos removidos será hecha horizontalmente en unidades de 20 metros lineales a lo largo de la línea de setos removidos.

(4) Con base en Unidades Individuales (Abra Selectiva). El diámetro de los árboles será medido a una altura de un metro y cuarenta centímetros (1.40 m.) sobre el terreno. Los árboles que midan menos de 30 centímetros de diámetro, no serán medidos para fines de pago.

Los tocones a ser removidos por pago específico serán medidos tomando el diámetro promedio al nivel del corte.

Cuando el Pliego de Licitación considere la medición de los árboles con base en unidades individuales, las unidades serán designadas y medidas de acuerdo con la siguiente lista de tamaños:

Medida del Diámetro a una Altura de 1.40 m. Sobre el Terreno	Designación del Concepto de Pago
Más de 30 cm. hasta 90 cm.	Pequeño
Más de 90 cm.	Grande

3.1.1.8. Sección 201.08: Base para el pago

Las cantidades aceptadas, medidas de acuerdo con lo estipulado en el artículo precedente, serán pagadas al precio de contrato por unidad de medida para los conceptos de pago listados más adelante que figuren en el Pliego de Licitación, precio y pago que serán compensación total por el trabajo prescrito en esta sección, de acuerdo con lo siguiente:

(1) Con Base en el Área. Las cantidades medidas serán pagadas al precio unitario de contrato por hectárea, respectivamente, por cada una de los conceptos de pago individuales que aparecen en el Pliego de Licitación.

(2) Con base en Suma Global. Cuando el Pliego de Licitación considera el pago de este concepto por suma global, se pagará este precio, el cual será la compensación total por las cantidades estimadas mostradas en el Contrato.

(3) Con Base Lineal. Cuando el Pliego de Licitación especifica el pago con base lineal, las cantidades correspondientes serán pagadas al precio unitario de Contrato para este concepto de pago.

(4) Con base en Unidades Individuales. Si el Pliego de Licitación establece que el pago será hecho con base en cantidades unitarias individuales, las cantidades aceptadas serán pagadas al precio del Contrato para los conceptos de pago respectivos.

(5) Exclusiones. Cuando el Pliego de Licitación no considere una cantidad estimada o un concepto por suma global, este trabajo no será pagado directamente, sino que será considerado como una obligación subsidiaria del Contratista incluida en los otros conceptos de pago del Contrato.

No se pagará por separado por Abra y Destronque ni por destape en bancos de préstamo, de acuerdo con lo estipulado en el Artículo 107.06 de las CGC, a menos que figuren en el Pliego de Licitación específicamente.

Ver los Artículo-106.03 y Artículo-110.04.

Los pagos serán efectuados bajo los siguientes conceptos:

Concepto de Pago		Unidad de Medida
201(1)	Abra y Destronque	Hectárea
201(2)	Abra y Destronque	Estación
201(3)	Abra y Destronque	Suma Global
201(4)	Abra y Destronque de Bancos de Préstamo	Hectárea
201(5)	Destape de Bancos de Préstamo	Hectárea
201(6)	Remoción de Arboles Individuales Pequeños.	Cada Uno
201(7)	Remoción de Arboles individuales Grandes.	Cada Uno
201(8)	Remoción de Tocones Individuales Pequeños	Cada Uno
201(9)	Remoción de Tocones Individuales Grandes.	Cada Uno

3.1.2. SECCIÓN 202: REMOCIÓN DE ESTRUCTURAS Y OBSTÁCULOS

3.1.2.1. Sección 202.01: Descripción

Este trabajo consistirá en la eliminación, total o parcial, y en la disposición satisfactoria de todas las construcciones, vallas, estructuras, pavimentos viejos, tuberías abandonadas, y cualesquiera otras obstrucciones que no están señaladas en los planos para permanecer en el sitio de la obra, exceptuando las obstrucciones que deban ser quitadas, disponiendo de ellas de acuerdo con otros conceptos del Contrato. También incluirá la recuperación de los materiales que se indiquen y el relleno de las zanjas, hoyos y fosos resultantes.

3.1.2.2. Sección 202.02: Requisitos para la Construcción: Generalidades

El Contratista deberá ejecutar el trabajo descrito, en el espacio correspondiente al Derecho de Vía o zonas adyacentes que sean propiedad del Contratante o sobre las cuales tenga servidumbre de uso, de acuerdo con lo que muestren los planos u ordene el Ingeniero.

Todo el material designado, recuperable, será retirado, evitando maltrato innecesario, en secciones o partes que puedan ser transportadas fácilmente y, luego, ser almacenados por el Contratista en los lugares del Proyecto ya especificados, o donde fuese indicado en otra forma en las CEC. El material perecedero se manejará de acuerdo con lo que dispone el Artículo-201.03. El material no perecedero puede ser acarreado hasta fuera de los límites de vista del Proyecto, contando con el permiso escrito y legalizado del dueño del terreno donde se deposite dicho material. Al Ingeniero se le deberá entregar copia de todos los permisos concedidos por estos propietarios.

Los hoyos, zanjas o cavidades que deje la demolición de estructuras, se deberán rellenar con material aceptable hasta el nivel del terreno de los alrededores y, si quedasen dentro del prisma de construcción de la vía, el relleno deberá compactarse de acuerdo con el Artículo-203.11.

3.1.2.3. Sección 202.03: Remoción de Puentes, Alcantarillas y otras Estructuras de Drenaje

Los puentes, alcantarillas y otras estructuras de drenaje que estén en servicio, no deberán removerse hasta que se hayan hecho arreglos satisfactorios para acomodar el tráfico.

A no ser que se dispusiera en otra forma, las subestructuras de las estructuras existentes, deberán ser demolidas hasta el fondo natural o lecho del río o arroyo, y las partes de la estructura que se encuentren fuera de la corriente, se demolerán por lo menos, 30 centímetros más abajo de la superficie del terreno natural. En los casos en que tales partes de las estructuras existentes se encontrasen por completo o en parte dentro de los límites de la nueva estructura, serán demolidas hasta donde fuese necesario para acomodar la construcción de la estructura proyectada.

Cuando lo requieran las CEC, todo el concreto que se demoliese, y que fuese de tamaño apropiado para revestimiento, pero que no se necesite en el Proyecto, deberá ser apilado en los lugares que muestren los planos o sean señalados por el Ingeniero.

3.1.2.4. Sección 202.06: Aceptación

La remoción de estructuras y obstáculos será evaluada visualmente.

El rellenado y compactación de las cavidades dejadas por las estructuras serán evaluados bajo la Sección-207.

3.1.2.5. Sección 202.07: Métodos de Medición

Cuando el Contrato estipule que el pago por la remoción de obstrucciones, será hecho sobre la base de una suma global, el concepto de pago incluirá todas las estructuras y obstrucciones que fuesen encontradas dentro del camino, de acuerdo con las disposiciones de esta Sección. Cuando el Contrato estipule que se pagará por la remoción de artículos específicos, la medición será hecha por la unidad estipulada en el Contrato.

Cuando el Pliego de Licitación no incluya conceptos de pago para cualquiera de las remociones mencionadas, dicho trabajo no se pagará directamente sino que será tomado en cuenta como una obligación subsidiaria del Contratista compensada bajo otros conceptos del Contrato.

3.1.2.6. Sección 202.08: Bases para el Pago

Las cantidades aceptadas, medidas de acuerdo con lo estipulado en el artículo precedente, serán pagadas al precio de contrato por unidad de medida para los conceptos de pago que figuren en el Pliego de Licitación, precio y pago que serán compensación total por el trabajo prescrito en esta sección.

Los conceptos para obstrucciones específicas, incluyendo tubería, a ser removida y eliminada bajo conceptos de pago por precio unitario, se pagarán al precio propuesto y contratado por unidad especificada en el Contrato, y este precio será compensación total por remover y disponer de tales objetos, así como la excavación y subsiguiente rellenado inherentes a la remoción de las mismas. El precio también incluirá la recuperación de los materiales objeto de la remoción, su custodia, preservación, almacenamiento en el Derecho de Vía y su disposición, según lo estipulado anteriormente.

Ver los Artículo-106.03 y Artículo-110.04.

3.1.3. SECCIÓN 203: EXCAVACIÓN Y TERRAPLENADO

3.1.3.1. Sección 203.01: Descripción

Este trabajo consiste en la excavación de material y la construcción de terraplenes. Esto incluye el suministro, acarreo, acopio, colocación, desecho, formación de taludes, conformación, compactación y acabado de material de tierra y rocoso.

3.1.3.2. Sección 203.01: Definiciones

a) Excavación.- La excavación consiste en lo siguiente:

(1) Excavación en la Vía.- Se refiere a todo el material excavado dentro de los límites del Derecho de Vía o dentro de las áreas de servidumbre, exceptuando la subexcavación descrita en el numeral (2) más adelante y la excavación estructural tratada en la Sección- 207. La excavación en la vía incluye todo el material encontrado independientemente de su naturaleza o características.

(2) Subexcavación.- Se refiere al material excavado de abajo del nivel de la subrasante, en tramos de corte, o de abajo del terreno original, en tramos de terraplén. La subexcavación no incluye el trabajo requerido en los Artículos 203.05, 203.06 (b) y 203.06 (c).

(3) Excavación de Préstamo.- Este es material usado en la construcción de terraplenes y es obtenido de lugares fuera del prisma de la vía. La excavación de préstamo incluye **préstamo no clasificado, préstamo selecto y material selecto para la capa superior de la terracería o terraplén.**

b) Construcción de Terraplenes.- La construcción de terraplenes consiste en la colocación y compactación de los materiales excavados en la vía o en bancos de préstamo. Este trabajo incluye:

(1) Preparación de la fundación de terraplenes. (2) Construcción del terraplén de la vía. (3) Construcción de escalones (hamacas) para terraplenes a media ladera. (4) Construcción de diques, rampas, promontorios y bermas. (5) Rellenado de áreas subexcavadas, hoyos, fosos y otras depresiones.

c) Material para Terraplenes.- Los materiales para la construcción de terraplenes son:

(1) Roca.- Se entiende por roca el material que contiene 25 por ciento o más, en volumen, de pedazos de roca mayores de 100mm de diámetro. **(2) Tierra.-** Se le aplica este término al material que contiene menos del 25 por ciento, en volumen, de pedazos de roca de más de 100mm de diámetro.

d) Tierra Vegetal Conservada.- Este es material excavado y conservado de la excavación en la vía y de las áreas de la fundación del terraplén, que es apropiado para el crecimiento de hierba, siembras de cobertura o vegetación nativa. Este material debe ser razonablemente libre de suelo duro, roca, arcilla, sustancias tóxicas, basura y otro material perjudicial.

(e) Desperdicio.- Se llama así a material sobrante (o extra) del balance entre excavación y terraplenado, o material inadecuado o material de subexcavaciones que no se puede usar en otro trabajo del Proyecto.

3.1.3.3. Sección 203.03: Materiales

Los materiales deberán cumplir con lo estipulado en los siguientes artículos:

Material de Relleno-Articulo-1003.24 L

Agua- Artículo-1012.01

3.1.3.4. Sección 203.04: Preparación para la Excavación en la Vía y la Construcción de Terraplenes

El área deberá ser despejada de vegetación y obstrucciones de acuerdo con las Sección-201 y Sección-202.

3.1.3.5. Sección 203.05: Conservación de Tierra Vegetal

La tierra vegetal procedente de la excavación de la vía y de las áreas de la fundación de los terraplenes, deberá ser conservada. La tierra vegetal conservada será amontonada en camellones de baja altura ubicados inmediatamente más allá de los límites de redondeo de los taludes de cortes y terraplenes o en otros lugares aprobados. La tierra vegetal será separada de todo otro material excavado.

La tierra vegetal conservada será colocada sobre los taludes terminados, de acuerdo con la Sección-915.

3.1.3.6. Sección 203.06: Excavación de la Vía

Excavar en la forma siguiente:

(a) Generalidades.- No perturbar el material o la vegetación existentes fuera de los límites de la construcción.

El material adecuado para rellenar estructuras, acabado de la superficie de la vía, coronamiento de la terracería u otros propósitos, se deberá excavar en una secuencia que permita la colocación del material excavado directamente en su posición final o en montones para su colocación posteriormente.

Incorporar en los terraplenes solo material adecuado. Reemplazar cualquier faltante de material adecuado causado por la disposición prematura de material excavado en la vía. Desechar material inadecuado o excavado en exceso de acuerdo con el Artículo 203.14.

Al final de cada día de operaciones, se deberán conformar y compactar las áreas trabajadas para proveer drenaje y una sección transversal uniforme. Eliminar todo surco y puntos bajos que pudieran retener agua.

(b) Cortes en Roca.- Los cortes en roca serán excavados hasta 150mm por debajo de la subrasante del Proyecto, dentro de los límites de la corona de la vía. Rellenar hasta el nivel de la subrasante con material de corona u otro material adecuado. Compactar el material de acuerdo al Artículo 203.11.

(c) Cortes en Tierra.- Los cortes en tierra serán escarificados hasta una profundidad de 150 mm debajo de la subrasante, dentro de los límites de la corona de la vía. Compactar el material escarificado de acuerdo con el Artículo 203.11.

3.1.3.7. Sección 203.07: Subexcavación

Excavar el material existente dentro de los límites mostrados en los planos o designados por el Ingeniero. Cuando sea aplicable, tomar secciones transversales. Evitar que material inadecuado llegue a mezclarse con material de relleno. Desechar el material inadecuado de acuerdo con el Artículo 203.14.

3.1.3.8. Sección 203.08: Excavación de Préstamo

Todo el material adecuado excavado en la vía deberá ser utilizado en la construcción de terraplenes. El Contratista no deberá usar excavación de préstamo si ello va a resultar en una excavación extra en la vía; Si el Contratista contraviene esta disposición, la excavación extra de préstamo que resulte, le será deducida de la cantidad total de excavación de préstamo.

El Contratista deberá obtener la aprobación del banco de préstamo de acuerdo con lo estipulado en el Artículo-107.06 y desarrollar y restaurar los bancos de préstamo según lo estipulado en el Artículo-108.31 y las NABCV. El Contratista no deberá excavar más allá de los límites establecidos. Cuando sea aplicable, el Contratista deberá conformar el banco de préstamo para permitir la medición exacta cuando la excavación haya sido completada.

3.1.3.9. Sección 203.10: Construcción del Terraplén

Incorporar en el terraplén solamente material excavado en la vía que sea adecuado. Cuando se agote el material adecuado de la excavación en la vía, suministrar material de préstamo no clasificado para completar el terraplén. Construir el terraplén de la siguiente manera:

(a) Generalidades.- Al final de las operaciones de cada día, conformar y compactar la superficie del terraplén para que drene y quede con una sección transversal uniforme. Eliminar todo surco y puntos bajos que puedan retener agua.

Durante todas las etapas de la construcción fijar rutas y distribuir la circulación del equipo de acarreo y nivelación en todo el ancho y longitud de cada capa de material.

Compactar los taludes laterales del terraplén con un rodillo del tipo de impacto (apisonador) o con pasadas de una topadora. Para taludes de 1:1.75 ó más vertical, compactar los taludes a medida que progresa la construcción del terraplén.

(d) Terraplenes.- La tierra se deberá colocar en capas horizontales que no excedan de 300 mm de espesor compacto. Los bolones y fragmentos de roca de sobre- tamaño, se deberán incorporar en las capas de 300 mm mediante reducción de tamaño o colocándolos individualmente, según se indicó antes en (c).

Compactar cada capa de acuerdo al Artículo 203.11, antes de colocar la capa siguiente.

(e) Terraplenes Fuera del Prisma de la Vía.- Cuando se coloquen terraplenes a un lado de estribos, aleros, pilas o cabezales de alcantarillas, el material se deberá compactar usando métodos que eviten presiones excesivas contra la estructura.

Cuando se coloque un material de terraplén en ambos lados de un muro de concreto o estructura de una caja, conducir las operaciones de manera que el material del terraplén compactado, esté al mismo nivel en ambos lados de la estructura.

Cuando se hinquen pilotes estructurales en lugares de un terraplén, limitar el tamaño máximo de partículas a 100 milímetros.

3.1.3.10. Sección 203.11: Compactación

(b) Terraplenes.- Clasificar el material de acuerdo a AASHTO M 145. Para material clasificado A-1 ó A-2-4, determinar la densidad máxima de acuerdo a AASHTO T 180, método D. Para otras clasificaciones de material, determinar el contenido óptimo de humedad y la densidad máxima, de acuerdo con AASHTO T 99, método C.

Ajustar el contenido de humedad del material clasificado A-1 hasta A-5 al contenido de humedad apropiado para la compactación. Ajustar el contenido de humedad del material clasificado como A-6 y A-7, dentro de un margen del 2% del contenido óptimo de humedad.

El material colocado en todas las capas del terraplén y el material escarificado en los tramos en corte se deberá compactar a, por lo menos, el 95% de la densidad máxima. La densidad y el contenido de humedad en el sitio, se deberán determinar de acuerdo a AASHTO T 238 u otros procedimientos de prueba aprobados.

3.1.3.11. Sección 203.13: Taludes, Conformado Y Acabado

Antes de colocar las capas superficiales de agregados se deberán completar los taludes, cunetas, zanjas, alcantarillas, empedrados, zampeados y otras estructuras menores subterráneas. Cortar taludes, conformar y dar acabado de conformidad con lo siguiente:

(a) Taludeo.- Todos los taludes de tierra se deberán dejar con superficies ásperas uniformes, excepto lo que se describe en (b) más adelante, sin quiebres notables vistos desde la vía. Excepto en roca sólida, redondear las partes superior e inferior de todos los taludes, incluyendo los taludes de las cunetas y zanjas de drenaje. Redondear el material que recubre la roca sólida hasta el grado en que sea práctico. Descamar todo talud de roca.

Si ocurre un deslizamiento o derrumbe en un talud de corte o terraplén, remover o reemplazar el material y reparar o restaurar todo daño sufrido por la obra. Banquear o bloquear el talud para estabilizar el deslizamiento. Reconformar el talud del corte o terraplén a una condición aceptable.

(c) Conformación.- La subrasante se deberá conformar hasta dejar una superficie lisa y de acuerdo con la sección transversal requerida. Los taludes se deberán conformar siguiendo una transición gradual realizando los acomodos de taludes sin quiebres apreciables. En los extremos de los cortes y en las intersecciones de cortes y terraplenes, acomodar los taludes en los planos horizontal y vertical a fin de fundirse el uno con el otro o con el terreno natural.

(d) Acabado.- Se deberá remover todo material de más de 150mm de tamaño de la superficie de la vía. Remover todo material inestable de la superficie de la vía y reemplazarlo con material adecuado. Acabar las superficies de tierra de la vía con una tolerancia de + 15 mm y, las superficies de roca, dentro de + 30 mm de la línea y rasante estaqueadas. Acabar la sección transversal de las cunetas dentro de + 30 mm de la línea y rasante estaqueadas. Mantener un drenaje adecuado de las cunetas y zanjas.

3.1.3.12. Sección 203.14: Desecho de Materiales Inadecuados o Excedentes

Los materiales inadecuados o excedentes serán desechados legalmente fuera del Proyecto. Cuando existe un concepto de pago por desechos, el material de desecho se deberá conformar y compactar en su sitio final de depósito (botadero). El material de desecho no se deberá mezclar con el material proveniente del abra y destronque ni con otros materiales cuya disposición no tiene pago directo.

3.1.3.13. Sección 203.15: Aceptación

El material para terraplenes y tierra vegetal conservada serán evaluados visualmente (Artículo-106.12) y mediante mediciones y ensayes (Artículo-106.12). Ver el Cuadro 106-1 que muestra los requisitos mínimos para muestreo y ensaye.

La excavación y construcción de terraplenes serán evaluados visualmente y mediante mediciones y ensayes (Artículo-106.12) respectivamente. El Cuadro 106-1 muestra los requisitos mínimos para muestreo y ensaye.

La limpieza será evaluada bajo la Sección-201 y Sección-203. La colocación de tierra vegetal conservada será evaluada bajo la Sección-915.

3.1.3.14. Sección 203.16: Método de Medición

La medición será como se indica a continuación:

(A) Excavación en la Vía.- Cuando en el Pliego de Licitación aparece el concepto de pago por **excavación en la vía** y no aparece el concepto de pago por construcción de

terraplenes**,** el material excavado se medirá en metros cúbicos, en su posición original, como sigue:

(1) Incluir como Excavación en la Vía los siguientes volúmenes:

(a) Excavación en el prisma de la vía definido por las secciones típicas del Proyecto.

(b) Material rocoso excavado y removido de debajo de la subrasante en tramos de corte.

(c)Cuando no exista en el Pliego de Licitación el concepto de pago para subexcavación, se incluirán el material inadecuado extraído de debajo de la subrasante y el material inadecuado de debajo de las áreas de terraplén.

(d) Cunetas y zanjas, exceptuando las contracunetas, que son medidas bajo concepto de pago separado.

(e) Tierra vegetal conservada.

(f) Material de préstamo usado en la obra, cuando en el Pliego de Licitación no exista el concepto de pago para préstamo.

(g) Rocas sueltas dispersas removidas y colocadas en la vía según se requiera.

(h) Material conservado tomado de los montones y usado en las obras de la Sección 203, exceptuando la tierra vegetal medida bajo la Sección-915.

(i) Material de deslizamientos y derrumbes no atribuibles al método de operación del Contratista.

(2) La Excavación en la Vía no deberá incluir lo siguiente:

(a) Descortezado (descapote) y otros materiales de desecho de los bancos de préstamo.

(b) Sobreexcavación en los taludes de corte en excavación en roca.

(c) Agua u otro material líquido.

(d) Material usado en trabajos diferentes a los requeridos en el Contrato.

(e) Material de la capa superficial de la vía escarificado en su lugar y no removido.

(f) Material excavado al escalonar los taludes de corte.

(g) Material excavado al redondear los taludes de corte.

(h) Preparación de la fundación para la construcción de terraplenes.

(i) Material excavado al banquear el terreno para construir terraplenes (“hamacas”).

(j) Material de deslizamientos o derrumbes atribuibles al método de operación del Contratista.

(k) Material conservado amontonado por opción del Contratista.

(l) Material excavado fuera de los límites establecidos para el talud.

(B) Subexcavación.- Cuando en el Pliego de Licitación aparece el concepto de pago para **subexcavación,** ésta será medida en metros cúbicos en su posición original.

(C) Préstamo no Clasificado, Préstamo Selecto y Material Selecto para la Capa Superficial de la Corona de la Vía.- Cuando en el Pliego de Licitación aparece el concepto de pago para **Excavación de Préstamo**, ya sea préstamo no clasificado, préstamo selecto y préstamo selecto para capa superficial, el volumen será medido en metros cúbicos en su posición original o en toneladas. No se medirá la excavación de préstamo cuando ésta haya sido hecha en vez de utilizar los excedentes de la excavación en la vía. Si la excavación de préstamo es medida en metros cúbicos, se tomarán las secciones transversales del terreno original después de descortezarlo (descapotarlo). Al completar la excavación y después de devolver al banco el material de desperdicio, se tomarán las secciones transversales finales antes de colocar de nuevo el material de descapote. Las secciones transversales finales serán tomadas en los mismos puntos de las originales.

(D) Construcción de Terraplenes.- Cuando en el Pliego de Licitación aparece el concepto de pago para la **construcción de terraplenes,** la medición se hará en metros cúbicos en su posición final. No se medirá la excavación en la vía, excepto según lo descrito en (3) más adelante. No se harán deducciones de la cantidad de construcción de terraplenes por el volumen ocupado por estructuras menores.

(1) Incluir en la cantidad por construcción de terraplenes, los siguientes volúmenes:

(a) Terraplenes de la vía.

(b) Material usado para rellenar áreas subexcavadas, hoyos, fosos y otras depresiones.

(c) Material usado para restaurar -a su relieve original- caminos o calles que estaban abandonados.

(d) Material usado en diques, rampas, promontorios y bermas.

(2) No incluir en el volumen de construcción de terraplenes, los siguientes:

(a) Volúmenes de preparación de fundaciones para la construcción de terraplenes.

(b) Ajustes por asentamiento del terraplén o de la fundación sobre la cual está colocado. (c) Material usado para redondear los taludes del relleno.

(3) Cuando en el Pliego de Licitación aparecen conceptos de pago para construcción de terraplenes y de excavación en la vía, medir la excavación en la vía en metros cúbicos en su posición original e incluir solamente los siguientes volúmenes:

(a) Material inadecuado subexcavado en cortes y material inadecuado extraído de debajo de los terraplenes, cuando en el Pliego de Licitación no existe concepto de pago para subexcavación.

(b) Material de deslizamientos y derrumbes no atribuibles al método de las operaciones del Contratista.

(c) Zanjas de drenaje, cambios de canal y zanjas de desviación.

(G) Desecho.- Medir el desecho o desperdicio en metros cúbicos en su posición final. Tomar las secciones transversales iniciales de la superficie del terreno después de descapotar el área. Al concluirse la colocación del material de desecho tomar de nuevo las secciones transversales antes de volver a colocar el material de descapote. Las secciones transversales serán tomadas usando los mismos puntos antes y después.

(H) Descamado de taludes.-El descamado de taludes se medirá en metros cúbicos en los vehículos de acarreo.

3.1.3.15. Sección 203.17 : Base para el Pago

Las cantidades aceptadas, medidas según lo prescrito anteriormente, serán pagadas al precio contractual por unidad de medida para los conceptos de pago enlistados más adelante que aparezcan en el Pliego de Licitación. El pago será compensación total por el trabajo prescrito, en esta sección y de conformidad con Artículo-106.03 y Artículo-110.04.

CUADRO 203-1
Muestreo y Ensayes

Material o Producto	Propiedad o Caracteristica	Metodo o Especificaciones del Ensaye	Frecuencia	Lugar del Muestreo
Tierra proveniente de la excavación en la vía, material de relleno de estructuras y préstamo no clasificado.	Clasificación	AASHTO M 145	1 por cada tipo de material	Banco del material
	Humedad - Densidad	AASHTO T 99 método C o AASHTO T 180 método D[1]	1 por cada tipo de material	Banco del material
	Densidad en el sitio y contenido de humedad	AASHTO T 238 y AASHTO T 239 u otros procedimientos aprobados.	1 por cada 4000 m^2 pero no menos de 1 por cada capa	Terraplén de la vía.
Préstamo Selecto utilizado como Material de Acabado.	Clasificación	AASHTO M 145	1 por cada tipo de material	Banco del material
Material Selecto para la capa superficial de la subrasante	Humedad - Densidad	AASHTO T 99 método C o AASHTO T 180 método D[1]	1 por cada tipo de material	Material procesado antes de ser incorporado en la obra.
	Graduación Límite liquido	AASHTO T 27 y AASHTO 11 AASHTO T 89	1 por cada 5000 m^3	Material procesado antes de ser incorporado en la obra.
	Densidad en el sitio y contenido de humedad	AASHTO T 238 y AASHTO T 239 u otros procedimientos aprobados.	1 por cada 300 m3 (500 t) pero no menos de 1 por cada capa	Terraplén de la Vía.
Material de Superficie	Clasificación	AASHTO M 145	1 por cada tipo de material	Material procesado antes de incorporarlo en la obra.
	Humedad - Densidad	AASHTO T 99 método C o AASHTO T 180 método D[1]	1 por cada tipo de material	Material procesado antes de incorporarlo en la obra.
	Densidad en el sitio y contenido de humedad	AASHTO T 238 y AASHTO T 239 u otros procedimientos aprobados.	1 por cada 300 m^3 (500 t) pero no menos de 1 por cada capa.	Terraplén de la Vía.

[1] Ver Artículo 203.11 (b)

3.1.4. SECCIÓN 206: SOBREACARREO

3.1.4.1. Sección 206.01: Definición

El sobre acarreo consistirá en el transporte autorizado de materiales de excavación más allá de la distancia de acarreo libre.

La distancia de acarreo libre es la distancia especificada que el material excavado deberá ser transportado sin compensación adicional. A no ser que se estipule otra cosa en los documentos del Contrato, la distancia de acarreo libre será de 300 metros.

3.1.4.2. Sección 206.02: Métodos de Medición

Para determinar lo que constituye el sobre acarreo autorizado, debe asumirse que el material que se extrae de la excavación será depositado en el terraplén después de haber sido acarreado según la ruta más corta posible.

La distancia del sobre acarreo para material obtenido dentro de los límites de la vía en construcción y colocado dentro de estos límites, será medida sobre la línea central de la vía. No se reconocerá distancia por movimientos transversales o laterales a partir de la línea

central, exceptuando por los materiales trasladados hacia áreas designadas fuera de los límites de la vía o desde ellas, tales como las áreas de préstamo, Caso 1, áreas de desecho, etc., en cuyo caso las distancias serán medidas por la ruta más corta que sea factible y satisfactoria, según lo determine el Ingeniero, a menos que se indique de otra forma.

Si el Contratista elige acarrear el material por otra ruta y tal ruta es más larga, los cálculos para el pago serán basados en la distancia de sobre acarreo medida por la ruta elegida por el Ingeniero.

Cuando el Pliego de Licitación contenga un concepto de pago "para sobre acarreo sobre la base de metro cúbico - kilómetro o tonelada-kilómetro, la cantidad de metros cúbicos - kilómetros o de toneladas-kilómetros de sobre acarreo a ser pagada, será el número de metros cúbicos o de toneladas, según el caso, de material sobre acarreado multiplicado por la distancia de sobre acarreo medida en kilómetros. La unidad "metro cúbico - kilómetro", es la cantidad de acarreo que se requiere para trasladar un metro cúbico una distancia de un kilómetro más allá de la distancia de acarreo libre. La unidad "tonelada-kilómetro", es la cantidad de acarreo que se requiere para trasladar una tonelada, es decir, 1,000 kilogramos, una distancia de un kilómetro más allá de la distancia de acarreo libre.

Las cantidades aceptadas, medidas de acuerdo con lo estipulado en el artículo precedente, serán pagadas al precio de contrato por unidad de medida para los conceptos de pago listados más adelante que figuren en el Pliego de Licitación, precio y pago que serán compensación total por el trabajo prescrito en esta Sección, excepto lo siguiente:

a. No se hará ningún pago por Sobre acarreo de Préstamo, Caso 2, Relleno para Fundación, material de cimentación y material eliminado en el redondeado de taludes, cuando el redondeo sea un concepto de pago específico.

b. Cuando el Pliego de Licitación no muestre cantidades estimadas de sobre acarreo para los conceptos de pago, el sobre acarreo no será pagado directamente, sino que será considerado como una obligación subsidiaria del Contratista.

3.1.5. SECCIÓN 207: EXCAVACIÓN PARA ESTRUCTURAS

3.1.5.1. Sección 207.01: Descripción- Generalidades

Este trabajo consistirá en la excavación necesaria para las cimentaciones de puentes, alcantarillas, subdrenes y otras obras, que de otro modo, no estén mencionadas en las especificaciones. Exceptuando lo estipulado de otra manera para las alcantarillas tubulares, el relleno de las estructuras terminadas y la remoción de todo el material excavado, deben de hacerse de acuerdo con estas especificaciones y en razonable conformidad con los planos o con lo que disponga el Ingeniero. Este trabajo también incluye lo que fuere necesario para achicar, bombear, drenar, entibar, apuntalar, y la construcción necesaria de ademes y ataguías, así como el suministro de los materiales para tales obras y también la subsiguiente remoción de ademes y ataguías, y la colocación de todo el relleno necesario.

Este trabajo también deberá incluir, el proporcionar y colocar el material de relleno de cimentación necesario, para reponer el material inadecuado que se haya encontrado debajo del nivel de cimentación de las estructuras.

No se hará ninguna clasificación de los distintos tipos de materiales que fuesen encontrados en la excavación.

3.1.5.2. Sección 207.02: Materiales

Los materiales deberán cumplir con lo estipulado de los siguientes artículos y secciones:

Material de Relleno- Artículo-1003.24L

Relleno Estructural- Artículo-.1003.20

Concreto- Sección-602

Relleno de Fundación- Artículo-1003.24A

Concreto para Sellar- Sección-602

Préstamo no Clasificado- Artículo-1003.24E

3.1.5.3. Sección 207.03: Requisitos para la Construcción-Abra y Destronque

Antes de comenzar las operaciones de excavación en cualquier área, todas las operaciones de Abra y Destronque necesarias deberán haber sido llevadas a cabo de acuerdo con la Sección-201.

3.1.5.4. Sección 207.04: Excavación

a) Para todas las Estructuras.- El Contratista deberá avisar al Ingeniero, con suficiente anticipación, del comienzo de cualquier excavación para que se puedan tomar las elevaciones y medidas de las secciones transversales del terreno original. El terreno natural contiguo a la estructura no deberá ser alterado sin permiso del Ingeniero.

Las zanjas o fosos de fundación para las estructuras o cimientos de las mismas, deberán ser excavados hasta los límites, rasantes o elevaciones mostradas en los planos, o según fuesen replanteados por el Ingeniero. Estas, deberán ser de suficiente tamaño para permitir la colocación de las estructuras o de los cimientos del ancho y longitud especificados. El nivel de desplante de los cimientos según se muestren en los planos, se deben considerar solamente aproximadas, y el Ingeniero puede ordenar por escrito los cambios en dimensiones o niveles de desplante de los cimientos que pudiese considerar necesarios para asegurar una cimentación satisfactoria.

Los peñascos, troncos y cualquier otro material objetable, que fuesen encontrados durante la excavación, deberán ser retirados del sitio.

El Contratista debe informar al Ingeniero cada vez que termine una excavación, y ningún cimiento, ni material de lecho, ni alcantarilla de tubo deberá ser colocada, hasta que el Ingeniero haya aprobado la profundidad de la excavación y la clase del material de cimentación.

b) Estructuras que no sean Alcantarillas de Tubo.- Todo el material suelto deberá ser extraído del área de cimentación, y el material duro deberá ser cortado hasta obtener una superficie firme, ya sea plana, escalonada o dentada, según lo ordene el Ingeniero. Todas las fisuras o hendiduras, deberán ser limpiadas y rellenadas con mortero. Toda piedra suelta y desintegrada y los estratos de pequeño espesor, deberán ser removidos. Cuando el cimiento tenga que apoyarse sobre material que no sea roca, la excavación hasta el nivel de desplante no deberá completarse sino hasta un poco antes de que vaya a ser colocado el cimiento. Cuando, a juicio del Ingeniero, el material en que vaya a desplantarse el cimiento fuese blando, fangoso o de otro modo inadecuado, el Contratista deberá remover el material inadecuado y rellenar con material granular aprobado (Ver Artículo-1003.24 A). Este relleno deberá ser colocado y compactado en capas de 15 centímetros de espesor cada una, hasta alcanzar nivel de cimentación.

Cuando se utilicen pilotes para la cimentación, la excavación de cada foso deberá estar terminada antes de ser hincados los pilotes, y cualquier relleno para cimentación deberá ser colocado después de que los pilotes hayan sido hincados. Una vez terminada esta operación, todo el material suelto, desplazado, deberá ser retirado, dejando un lecho liso y sólido para recibir el cimiento.

3.1.5.5. Sección 207.05: Utilización de los Materiales excavados

Todo el material excavado, siempre que sea adecuado, deberá ser utilizado como relleno o terraplén. El material excedente, aun cuando provisionalmente fuese permitido que quede dentro del cauce de la corriente, finalmente se deberá retirar de forma que no obstruya y contamine la corriente ni perjudique en modo alguno la eficiencia o apariencia de la estructura. En ningún momento se deberá depositar ningún material excavado de manera que ponga en peligro la construcción parcialmente terminada o provoque sedimentación en los cursos o reservorios de agua.

3.1.5.6. Sección 207.07: Relleno y Terraplenes para Estructuras que no sean Alcantarillas de Tubo

(a) Rellenado.- Las zonas excavadas alrededor de las estructuras, deben ser rellenadas con material granular permeable (Ver Artículo-1003.24 L), colocado en capas horizontales que no excedan de 15 centímetros de espesor, hasta alcanzar el nivel original del terreno. Cada capa deberá ser humedecida o secada, según sea necesario, y compactada totalmente con el equipo apropiado.

Al hacer rellenos o terraplenes detrás de estribos, pilas o muros, hasta donde sea posible, el material deberá ser colocado simultáneamente, aproximadamente, a la misma altura en ambos lados de la estructura. Si las condiciones exigiesen la colocación del relleno o terraplén hasta una altura notablemente más alta en un lado que en el contrario, el material adicional en el lado más alto no deberá ser colocado hasta que el Ingeniero haya otorgado su permiso y además, es preferible no hacerlo hasta que la estructura tenga 14 días de edad o hasta que los ensayes hechos por el laboratorio, bajo la supervisión del Ingeniero, permitan comprobar que el concreto ha alcanzado suficiente resistencia para soportar las presiones producidas por los métodos de construcción utilizados o que los materiales de relleno han sido colocados sin daños o deformaciones en la estructura que excedan un factor de seguridad adecuado.

No serán colocados ni rellenos ni terraplenes detrás de las paredes de cajas de concreto reforzado, estribos o estructuras de marcos rígidos, hasta que la losa superior haya sido colocada y curada adecuadamente. Detrás de estribos sostenidos en su parte superior por la superestructura y detrás de los aletones de cajas y puentes, los rellenos y terraplenes deberán ser levantados simultáneamente detrás de ambos estribos o aletones opuestos.

Todos los terraplenes adyacentes a estructuras, deberán construirse en capas horizontales, compactadas según se prescribe en el Artículo-203.10, excepto que se permitirá el uso de apisonadoras mecánicas para obtener la compactación exigida. Se deberá poner especial cuidado para evitar que los rellenos produzcan "acción de cuña" contra la estructura y los taludes que limitan o están dentro del área por rellenar, deberán ser escalonados o dentados para evitar la acción de cuña. La colocación del material para los terraplenes y el escalonado de los taludes, deberá hacerse en tal forma que continuamente haya una berma horizontal de material concienzudamente compactado en una longitud por lo menos, igual a la altura del estribo o muro contra el cual se coloque el relleno, exceptuando donde el suelo original, no alterado, interfiriese dentro de esta área.

El relleno estructural y el relleno de fundación serán evaluados de acuerdo con el Cuadro 207-1.

(b) Compactación.- El contenido óptimo de humedad y la densidad máxima serán determinados de acuerdo con la norma AASHTO T 99, método C. Se ajustará el contenido de humedad del material de relleno a un valor adecuado para la compactación.

El material será colocado en cada capa de relleno a, por lo menos, el 95 por ciento de la densidad máxima. La densidad y contenido de humedad **in situ** serán determinados de acuerdo con AASHTO T 238 y T 239 u otros procedimientos aprobados.

3.1.5.7. Sección 207.09: Aceptación

Los materiales de relleno, de lecho y de relleno de fundación serán evaluados visualmente y por medio de mediciones y ensayes. El Cuadro 207-1 muestra los requisitos mínimos para el muestreo y ensayes. (Ver Artículo-106.12).

La excavación estructural y el rellenado serán evaluados visualmente y mediante mediciones y ensayes. (Ver Artículo-106.12).

El abra y destronque será evaluada bajo las Sección-201 y Sección-202.

El concreto para sellado será evaluado bajo la Sección-602.

3.1.5.8. Sección 207.10: Métodos de Medición: Excavación para Estructuras

El volumen de excavación que se pagará, consistirá en la cantidad de metros cúbicos de material aceptablemente excavado de acuerdo con los planos o con las instrucciones por escrito del Ingeniero, medidos en su posición original. En ningún caso la medición para pago incluirá los siguientes volúmenes:

1) El volumen excavado fuera de los planos verticales paralelos, situados a 45 centímetros de: a) Las líneas netas de los cimientos o fundaciones; y b) Las paredes interiores de las alcantarillas de tubo y de arco en su dimensión horizontal más ancha.

2) El volumen excavado fuera de las líneas netas de la excavación, mostradas en los planos para los subdrenes y el relleno colocado fuera de los límites de "relleno para fundación", que haya establecido el Ingeniero.

4) El volumen de agua u otro líquido resultante de las operaciones de construcción, y que pueda ser bombeado o drenado.

5) El volumen de cualquier excavación efectuada con anterioridad al levantamiento de las secciones transversales del terreno original sin alterar.

7) El, volumen de excavación para cimentación que se ordene a una profundidad mayor de 1.50 metros por debajo del nivel de desplante de tales cimientos mostrado en los planos originales del Contrato, a menos que el Pliego de Licitación incluya un concepto de pago para excavación ordenada por debajo de los niveles de desplante mostrados en los planos de los cimientos individuales.

9) La cuña de material que sea necesario para dar estabilidad a las paredes de las excavaciones y seguridad al personal que trabaja dentro de la excavación. El Contratista deberá incluir este costo como subsidiario en su oferta pues no habrá pago directo ni por la remoción de derrumbes ni por el entibamiento de la excavación.

3.1.5.9. Sección 207.09: Excavación para Puentes

El volumen de excavación señalado en los planos o en las Especificaciones Especiales como "Excavación para Puentes", se medirá como se indica adelante, y para fines de pago se llevará cuenta separada de la excavación para todas las demás estructuras.

El volumen de excavación para puentes a pagar, será el volumen excavado dentro de los planos verticales paralelos, situados 45 centímetros hacia afuera de las líneas netas de los cimientos. Estos planos verticales definirán el volumen de excavación a pagar, independientemente de los volúmenes excavados dentro y fuera de ellos.

3.1.5.10. Sección 207.12: Relleno para Cimentación

El volumen del relleno para cimentación a pagar será la cantidad del material granular especial, efectivamente entregado y colocado bajo el nivel de desplante de las estructuras, medido en metros cúbicos en su posición final, según lo especificado y ordenado, completo en su lugar y aceptado.

3.1.5.11. Sección 207.13: Relleno Estructural

El relleno estructural será medido en metros cúbicos ya colocado y compactado. Se limitará el volumen de relleno estructural medido en su posición final, al colocado dentro de planos verticales a 45 centímetros afuera y paralelos a las líneas netas de zapatas o fundaciones. Se usarán estos planos verticales para determinar las cantidades de pago independientemente de la cantidad de relleno colocado fuera de estos planos.

3.1.5.12. Sección 207.15: Bases para el Pago

Las cantidades aceptadas, medidas de acuerdo con lo estipulado en el artículo precedente, serán pagadas al precio de contrato por unidad de medida para los conceptos de pago listados más adelante que figuren en el Pliego de Licitación, precio y pago que serán compensación total por el trabajo prescrito en esta sección, con las siguientes excepciones:

1) Cualquier excavación para cimentación de estructuras que fuese ordenada a una profundidad mayor de 1.50 metros por debajo del nivel de desplante mostrado en los planos originales del Contrato, será pagada según lo estipulado el Artículo-110.05, a no ser que se incluya en el Pliego de Licitación, un concepto de pago por excavación ordenada por debajo del nivel de desplante de la cimentación.

2) El concreto será medido y pagado de acuerdo con lo estipulado en la Sección-602 de estas especificaciones.

3) Cualquier excavación del camino o de préstamo que se necesite como excedente de la cantidad excavada para estructuras, será medida y pagada de acuerdo con lo estipulado en la Sección-203 de estas especificaciones.

Ver los Artículos-106.03 y Artículo-110.04.

CUADRO 207-1
Muestreo y Ensayes

Material o Producto	Propiedad o Caracteristica	Método o Especificaciones del Ensaye	Frecuencia	Lugar del Muestreo
Relleno Estructural	Graduación	AASHTO T 27 y AASHTO T 11	1 por cada tipo de material	Banco de material o en el montón acopiado.
Préstamo no Clasificado	Límite Líquido	AASHTO T 89	1 por cada tipo de material	En el material procesado antes de incorporarlo en la obra.
Material de Lecho, Clase C	Humedad - Densidad	AASHTO T 99 método C		
	Densidad **in situ** y Contenido de humedad	AASHTO T 238 y AASHTO T 239 u otros procedimientos aprobados.	1 por cada 200 m3 pero no menos de 2 por cada instalación	En el material compactado.
Material de Lecho, Clase B	Graduación	AASHTO T 27 y AASHTO T 11	1 por cada tipo de material	Fuente del material.
Relleno de Fundación	Clasificación	AASHTO M 145	1 por cada tipo de material	Banco de material o en el monto acopiado.
Relleno Granular Selecto	Humedad - Densidad	AASHTO T 99 método C AASHTO T 27 y AASHTO 11	1 por cada tipo de material 1 por cada 5000 m^3	En el material procesado antes de ser incorporado en la obra.
Relleno para Muros Encribados	Densidad **in situ** y contenido de humedad.	AASHTO T 238 y AASHTO T 239 u otros procedimientos aprobados.	1 por cada 200 m3 pero no menos de 2 por cada instalación	En el material compactado.

3.2. SUBDIVISIÓN 500: PAVIMENTOS RÍGIDOS Y SEMI-RÍGIDOS

3.2.1. SECCION 501: PAVIMENTOS DE CONCRETO DE CEMENTO HIDRÁULICO

3.2.1.1. Sección 501.01: Descripción

Este trabajo consiste en la construcción de un pavimento de concreto de cemento Portland, simple o reforzado, con inclusión de aire o no, según se especifique, de acuerdo con estas especificaciones y en conformidad sustancial con las líneas, rasantes, espesores, secciones transversales típicas, mostrados en los planos o establecidos por el Ingeniero.

3.2.1.2. Sección 501.02: Materiales

Los materiales deberán llenar los requisitos estipulados en los artículos indicados a continuación:

MATERIAL	
Cemento Portland	Artículo-1001.01
Agregado fino	Artículo-1003.01
Agregado grueso	Artículo-1003.02
Rellenadores y Selladores de Juntas	Artículo-1005.01
Acero de refuerzo	Artículo-1009.01
Materiales para curar	Artículo-1011.01
Aditivos para inclusión del aire	Artículo-1011.02
Aditivos químicos	Artículo-1011.03
Agua	Artículo-1012.01a
CFAH (Fly Ash)	Artículo-1012.10
Adhesivos de Resina Epóxica	Artículo-1012.16
Lechada de Cemento	Artículo-1012.15

3.2.1.3. Sección 501.03: Requisitos para la Construcción-Composición de la Mezcla (Diseño de la Mezcla de Concreto)

Diséñese la mezcla de concreto de acuerdo con lo estipulado en el Artículo-602.03. Ajustar el diseño a lo indicado en el Cuadro 501-1.

CUADRO 501-1
DOSIFICACIÓN Y CONDICIONES DEL CONCRETO PARA PAVIMENTOS

Relación Agua/Cemento (Máxima)	Temperatura de Concreto	Revenimiento	Contenido de Aire (%)	Tamaño del Agregado (1) (AASHTO M 43)	Resistencia a la Compresión a los 28 días (Mínima)
0.49	20 ± 10°C	40 ± 20 mm	4 ½ mín.	No. 57 ó 67	25 MPa

Se podrá usar en el diseño de la mezcla de concreto otros tamaños de agregado menores que el No. 57 ó 67 de la AASHTO M 43; sin embargo, si el tamaño nominal máximo del agregado es de 12.5 mínimo o menor, incorpórese, por lo menos, 5% de aire. Provéase cemento Portland de los Tipos I ó II.

3.2.1.4. Sección 501.04: Equipo

El equipo y las herramientas necesarias para el manejo de los materiales y la ejecución de todas las partes de la obra deberán ser aprobados por el Ingeniero en cuanto a diseño, capacidad y condición mecánica. El equipo deberá encontrarse en el sitio de trabajo con suficiente anticipación al comienzo de las operaciones de construcción, para que pueda ser examinado detenidamente y aprobado.

I. Planta y Equipo de Dosificación.-

1.1. Generalidades.- La planta de dosificación incluirá silos, tolvas pesadoras y básculas para el agregado fino y para cada tamaño de agregado grueso. Si va a usar cemento a granel, deberá incluirse un silo, tolva y báscula aparte para el cemento. Las tolvas pesadoras deberán estar debidamente selladas y provistas de troneras para evitar el levantamiento del polvo durante la operación. Se deberá contar con dispositivos de seguridad aprobados, que sean conservados en buen estado, para la protección de todo el personal empleado en la operación, inspección y prueba de la planta. La planta de dosificación deberá estar equipada de un medidor adecuado, no reajustable, que marque correctamente el número de bachadas dosificadas;

1.2. Silos y tolvas.- El equipo incluirá silos y tolvas con compartimientos separados para los agregados finos y para cada tamaño de agregado grueso;

1.3. Básculas.- Las básculas para pesar los agregados y el cemento podrán ser del tipo de brazo o de carátula sin resorte. Tendrán una precisión del 0.5 por ciento, dentro del margen establecido para su funcionamiento.

Cuando se utilice una báscula de brazo, deberá estar provista de una carátula de aviso que advierta al operador el momento en que se aproxima la carga requerida en la tolva pesadora. En el brazo de la báscula deberá haber dispositivos que indiquen claramente las posiciones críticas. El brazo y la carátula de aviso deberán estar bien a la vista del operador mientras esté cargando la tolva y éste deberá tener fácil acceso a todos los controles.

Las básculas deberán ser inspeccionadas y selladas con la frecuencia que el Ingeniero opine que sea necesario para asegurar su continua exactitud. El Contratista deberá tener disponibles no menos de 10 pesas de 25 kilogramos cada una para la comprobación frecuente de todas las básculas, y deberá proveer la manera de levantar las pesas, cuando esto sea necesario;

1.4. Dispositivos Automáticos Para Pesar.- A menos que las CEC lo estipulara de otra manera, para proporcionar los agregados y el cemento a granel, las plantas dosificadoras deberán estar equipadas de dispositivos pesadores automáticos de un tipo aprobado;

2. Mezcladoras.-

2.1. Generalidades.- El Concreto podrá ser mezclado en el sitio de la construcción, en una planta central o bien, total o parcialmente, en camiones mezcladores. Cada camión mezclador deberá tener fija, en un lugar prominente, una placa del Fabricante que indique la capacidad del tambor en términos del volumen de concreto mezclado y la velocidad de rotación del tambor mezclador o de las paletas;

2.2. Mezcladoras Estacionarias.- La mezcla deberá ser hecha en una mezcladora aprobada capaz de revolver los agregados, el cemento y el agua en una masa completamente homogénea y uniforme, dentro del período de revoltura especificado, y de descargar la mezcla sin segregación.

Cada pavimentadora o mezcladora estacionaria deberá estar equipada con un dispositivo aprobado de regulación del ciclo de revoltura que automáticamente tranque la palanca de descarga cuando el tambor haya sido cargado, y la suelte al final del período de revoltura. Este dispositivo deberá estar equipado con un timbre u otro sistema de aviso adecuado, que sea, ajustable para dar una señal claramente audible cada vez que la palanca de descarga quede suelta. En caso de falla de este dispositivo regulador del ciclo, la mezcladora podrá seguir siendo utilizada durante el resto del día mientras se repara la falla, siempre que cada bachada sea mezclada durante 90 segundos.

La mezcladora también deberá estar equipada con un contador de bachadas adecuado, no reajustable, que correctamente marque el número de bachadas mezcladas.

Las mezcladoras deberán ser limpiadas a intervalos apropiados. Las paletas que van dentro del tambor o tambores deberán ser reparadas o reemplazadas cuando se desgasten 2.0 centímetros o más. El Contratista deberá (1) tener disponible en el lugar de la obra una copia del diseño del Fabricante, que muestre las dimensiones y arreglos de dichas paletas con respecto a la altura y profundidad originales, ó (2) marcar señales permanentes en las paletas en el límite de 2 cm. hacia adentro del borde de la paleta de cuando está nueva, para indicar cuándo se ha llegado al desgaste máximo. Es recomendable taladrar agujeros de 6.3 milímetros cerca de cada extremo y en el punto medio de cada paleta, como referencia para medir el desgaste;

2.3. Camiones Mezcladores y Camiones Agitadores.-

Los camiones mezcladores empleados para la revoltura y transporte del concreto, y los camiones agitadores empleados para transportar concreto mezclado en una planta central, deberán llenar los requisitos aplicables de la Norma AASHTO M 157;

2.4. Camiones no agitadores.- Los cajones del equipo no agitador para transporte de concreto, deberán ser recipientes de metal lisos, que no dejen escapar el mortero, capaces de descargar el concreto a una velocidad controlada y satisfactoria, sin segregación. El concreto deberá ser descargado desde el fondo del recipiente. En caso de que la descarga se efectúe inclinando el cajón, la caída de la carga deberá ser retrasada por un deflector apropiado. Cuando fuesen necesarias para protección, el Contratista proporcionará cubiertas adecuadas.

3. Equipo de Acabado.- 3.1. Máquina Acabadora.- La máquina acabadora o terminadora, deberá estar equipada, por lo menos, con dos codales transversales del tipo oscilante u otros aditamentos comparables para alisar el concreto según se requiere en el Artículo-501.13.

3.2. Vibradores.- Los vibradores, para vibrar las losas del pavimento de concreto en todo su ancho, podrán ser del tipo superficial a batea o del tipo interno de tubo sumergido o de cabezas vibradoras múltiples. Los vibradores pueden estar fijos al esparcidor o máquina acabadora o estar montados sobre un vehículo separado. No deberán entrar en contacto con los dispositivos de transferencia de la carga a través de las juntas ni con las formaletas de subrasante o laterales. La frecuencia de los vibradores superficiales no deberá ser menor de 3,500 impulsos por minuto, y la frecuencia de los de tipo interno no deberá ser menor de 5,000 impulsos por minuto, para los vibradores de tubo, y no menor de 7,000 impulsos por minuto, para los de cabeza vibradora.

Cuando se usen vibradores internos del tipo de cabezas vibradoras, operados a mano o conectados a máquinas esparcidoras o acabadoras, cerca de los moldes, deberán tener una frecuencia de no menos de 3,500 impulsos por minuto.

4. Sierra Cortajuntas.- Cuando se ha determinado o especificado que las juntas sean aserradas, el Contratista deberá proveer equipo para este fin, en número adecuado y suficiente potencia para efectuar el aserrado de las juntas con una sierra de hoja con filo de diamante enfriada por agua, o con una rueda abrasiva de las dimensiones y velocidad requeridas. El Contratista deberá además, disponer de por lo menos, una unidad de reserva en

buen estado de funcionamiento. Durante todo el tiempo que tomen las operaciones de aserrado, el Contratista deberá mantener en el lugar de la obra una amplia existencia de hojas de repuesto. Para el aserrado durante la noche el Contratista deberá instalar un sistema de iluminación artificial eficiente. Todo este equipo mencionado deberá estar disponible en la obra desde antes del comienzo y durante la colocación del concreto.

5. Formaletas.- Las formaletas laterales rectas serán de metal con un espesor de, por lo menos 5.6 milímetros y serán suplidas en secciones de no menos de 3.05 metros de largo. Las formaletas tendrán una profundidad por lo menos igual al espesor prescrito para el borde de la losa de concreto sin la junta horizontal, y un ancho de la base, por lo menos, igual a la profundidad de dichas formaletas. Para las curvas con radio de 30 metros o menos, se emplearán formaletas flexibles o curvas que tengan el radio adecuado y un diseño aceptable.

Las formaletas deberán estar provistas de dispositivos adecuados para asegurar su fijación, de manera que cuando estén colocadas resistan, sin flexión ni asentamientos visibles, el impacto y la vibración que ocasione el equipo de compactación y acabado. Las formaletas que hayan sido reparadas no deberán ser utilizadas hasta que hayan sido inspeccionadas y aprobadas.

No será permitido el uso de formaletas compuestas de piezas ensambladas, excepto cuando el área total de pavimento de cualquier espesor especificado en el Proyecto, sea menor de 1,500 metros cuadrados. La cara superior de la formaleta no deberá tener diferencias de más de 4 milímetros en 3 metros con la superficie plana exacta y el costado no deberá variar en más de 6 mm. Las formaletas deberán contar con aditamentos para trabar herméticamente los extremos de empalmes y asegurar su inmovilidad.

3.2.1.5. Sección 501.06: Colocación de las Formaletas

1. La fundación de las formaletas laterales deberá ser dura y ajustada a las elevaciones de la subrasante, a fin de que dichas formaletas queden firmemente apoyadas en toda su longitud y en rasante.

Si en algún lugar a lo largo de las formaletas, la corona de éstas quedare por debajo de la rasante establecida, se escarificará la subrasante y se rellenará la depresión con material granular aprobado, en capas de centímetro y medio o menos de espesor, en anchos no, menores de 45cm. a cada lado de la formaleta y se compactará debidamente. Los promontorios o áreas de la subrasante o subbase que rebasen el nivel requerido serán corregidos por medio de apisonado o corte a ambos lados de la base de la formaleta.

2. Las formaletas serán colocadas con suficiente anticipación a la colocación del concreto para así facilitar la ejecución y aprobación de todas las operaciones que hay que hacer a lo largo y a los lados de ellas. Después de que las formaletas hayan sido colocadas de conformidad con la rasante correcta, se deberá apisonar ampliamente la subrasante o subbase, a máquina o a mano, a ambos lados de la base de dichas formaletas.

3.2.1.6. Sección 501.08: Manipulación, Medición y Dosificación de los Materiales

El sitio de la planta de dosificación, el arreglo de la misma, el equipo y las disposiciones para el transporte del material deberán ser tales que se asegure un abastecimiento continuo de material para el trabajo. El acopio de los agregados deberá cumplir con lo dispuesto en el Artículo-107.08.

Todos los agregados lavados y los producidos o manipulados por medios hidráulicos, deberán ser acopiados o ensilados con tiempo suficiente para que drenen la humedad, por lo menos, durante 12 horas antes de su uso en la fabricación del concreto.

El agregado fino y cada tamaño de agregado grueso deberán ser pesados separadamente y descargados en tolvas en las cantidades respectivas fijadas por el Ingeniero en la dosificación de trabajo. El cemento será medido por peso. Para pesar el cemento se utilizarán básculas y tolvas separadas que cuenten con un dispositivo que indique con seguridad la descarga completa de la bachada de dicho material en la tolva de dosificación.

Cuando la mezcla sea hecha en el sitio de la obra, los agregados deberán ser transportados de la planta de dosificación hasta la mezcladora, en cajas que contengan bachadas completas, cajones (tinas) de camiones u otros recipientes de capacidad y construcción adecuada para transportar debidamente el volumen requerido. Es apropiado el uso de camiones con tinas de varios compartimientos que contienen cada uno el volumen correspondiente a una bachada y provistos de particiones que separen, una bachada de otra y eviten que el agregado se escurra de un compartimiento al otro durante el acarreo o volcadura.

Cuando sea usado cemento a granel, el Contratista deberá utilizar un método adecuado para la manipulación del cemento desde la tolva pesadora al recipiente de transporte o descargarlo en la bachada misma, para su traslado hasta la mezcladora, por

medio de una canaleta de descarga, manga u otro dispositivo aprobado, para evitar pérdidas de cemento y asegurar en cada bachada el contenido especificado.

El cemento a granel deberá ser transportado a la mezcladora en compartimientos herméticos que lleven la cantidad total de cemento requerido para cada bachada, o entre el agregado grueso y el fino, si no estuviese prohibido por las especificaciones especiales. Cuando el cemento sea puesto en contacto con los agregados, las bachadas podrán ser rechazadas a menos que sean mezcladas antes de que hayan transcurrido 1 l/2 horas después de producido dicho contacto. El cemento podrá ser transportado encima de los agregados, si va en sus bolsas originales en la cantidad correspondiente a cada bachada.

Las dosificaciones para cada bachada deberán ser entregadas en la mezcladora por separado e intactas. Cada bachada deberá ser vaciada dentro de la mezcladora sin derrame de cemento. La dosificación de cada bachada deberá ser efectuada en tal forma que los pesos de cada material se encuentren dentro de una tolerancia del l% para el cemento y del 2% para los agregados.

El agua podrá ser medida por volumen o por peso. La exactitud en la medición del agua deberá estar dentro de un límite de error que no exceda el 1%. A menos que el agua vaya a ser pesada, el equipo medidor del líquido deberá incluir un tanque auxiliar desde el cual sea abastecido el tanque medidor. Este deberá estar equipado con una llave o válvula exterior para facilitar el calibrado, a menos que sean provistos otros medios que permitan constatar con rapidez y exactitud, la cantidad de agua que hay en el tanque.

El volumen del tanque auxiliar deberá ser, por lo menos, igual al del tanque de medición.

Los métodos y el equipo para añadir un agente inclusor de aire u otros aditivos a la bachada, cuando fuesen necesarios, deberán ser aprobados por el Ingeniero. Todos los aditivos deberán ser medidos en la mezcladora con una exactitud de 3%, en más o en menos.

Cuando las especificaciones especiales exijan el empleo de negro de humo en la capa superior, el tambor y el cucharón de carga de la mezcladora deberán ser muy bien lavados, o por lo menos, habrá que mezclar una bachada de concreto que contenga negro de humo para colocarla en la capa de abajo inmediatamente antes de que se vaya a colocar concreto coloreado en la capa superior.

3.2.1.7. Sección 501.09: Revoltura del Concreto

El concreto puede ser mezclado en el sitio de la obra, en una planta central de revoltura o en camiones mezcladores. El mezclador deberá ser de un tipo y capacidad aprobados. El tiempo de revoltura se computará desde el momento en que todos los materiales, excepto el agua, estén en el tambor. El concreto premezclado deberá ser mezclado y entregado de acuerdo con los requisitos de la norma AASHTO M 157, excepto que las revoluciones mínimas exigidas en la velocidad de la revoltura para el concreto mezclado en tránsito, no podrán ser rebajadas a menos de las recomendadas por el Fabricante del mezclador, cuyo número deberá estar indicado en la placa de serie fijada por la fábrica en el mezclador. El Contratista deberá suministrar datos sobre pruebas que sean aceptables para el Ingeniero, confirmando que la marca y modelo del mezclador producirán concreto uniforme conforme las especificaciones AASHTO M 157 utilizando el número reducido de revoluciones mostrado en la placa de serie.

Cuando la revoltura sea hecha en el sitio de trabajo o en una planta central, el tiempo de revoltura no deberá ser menor de 50 ni mayor de 90 segundos. Se aumentarán 4 segundos al tiempo especificado para la revoltura, cuando el plazo comience a contarse desde el momento en que el cucharón de carga llega a su máxima posición de alzado. El tiempo de revoltura termina cuando se abre la canaleta de descarga. En los mezcladores de tambores múltiples el tiempo de traslado está incluido en el tiempo de revoltura. Antes de cargar el tambor del mezclador con los componentes de una bachada, hay que vaciar la bachada anterior ya mezclada que contiene.

El tambor deberá ser operado a la velocidad mostrada en la placa del Fabricante del mezclador. Cualquier concreto mezclado en un tiempo inferior al especificado será descartado y desechado por el Contratista, a sus expensas. El volumen de concreto mezclado por bachada no deberá exceder la capacidad mostrada en la placa para capacidad nominal que el Fabricante fija en el mezclador, pero se permitirá una sobrecarga hasta del 10% sobre esa capacidad nominal del mezclador, siempre que los resultados de las pruebas de resistencia, segregación y consistencia del concreto sean satisfactorias y no ocurra desbordamiento del mismo.

La bachada deberá ser alimentada al tambor en tal forma que una parte del agua para la revoltura llegue antes que el cemento y los agregados. El agua deberá fluir uniformemente y toda ella deberá estar en el tambor al final de los primeros 15 segundos del

período de revoltura. La garganta del tambor deberá conservarse limpia de acumulaciones que puedan restringir el libre paso de los materiales a mezclar.

El concreto fabricado en una planta central de mezclar deberá ser transportado en camiones mezcladores, camiones agitadores o camiones no agitadores, según se especifica en el Artículo 501.04 (2.2). El tiempo que transcurra desde que el agua es agregada a la mezcla hasta que el concreto sea depositado en el sitio de la obra, no deberá exceder de 45 minutos, cuando el concreto sea acarreado en camiones no agitadores, ni de 90 minutos, cuando el acarreo sea hecho en camiones mezcladores o en camiones agitadores. En condiciones excepcionales de calor ambiental o bajo otras condiciones que contribuyan al endurecimiento rápido del concreto, el tiempo máximo permisible podrá ser reducido por el Ingeniero.

No se permitirá el reamasado del concreto agregándole agua, ni por otros medios, excepto en los casos en que el concreto es transportado en camiones mezcladores o agitadores y se necesita agua adicional a los materiales de la bachada y mezclar por más tiempo, a fin de aumentar el revenimiento requerido, si lo permite el Ingeniero y tales operaciones sean llevadas a cabo dentro de los 45 minutos siguientes al inicio de la revoltura y no es excedida la relación agua/cemento. No deberá utilizarse concreto que en el momento de su colocación no esté dentro de los límites especificados para el revenimiento. El uso de aditivos para aumentar la trabajabilidad del concreto o para acelerar el fraguado, sólo será permitido si está previsto en las especificaciones especiales del contrato.

3.2.1.8. Sección 501.10: Limitaciones en la Revoltura

No se deberá mezclar, colocar ni dar acabado a concreto alguno cuando la luz natural sea insuficiente, a menos que se cuente con un sistema de alumbrado artificial adecuado y aprobado.

Salvo disposición en contrario, la temperatura del concreto mezclado no deberá ser inferior a 10ºC ni mayor de 32ºC en el momento de ser colocado en las formaletas.

3.2.1.9. Sección 501.11. Colocación del Concreto

El concreto deberá ser depositado en la subrasante preparada, en tal forma que requiera un mínimo de manipulación. A menos que los camiones mezcladores, camiones agitadores o equipo no agitador para transporte de concreto estén equipados con medios para descargar el concreto sin segregación de los materiales, el concreto deberá ser descargado dentro de un aparato esparcidor aprobado, y será esparcido mecánicamente sobre la subrasante, en tal forma que se evite la segregación de los materiales. La colocación será continua entre juntas transversales sin el uso inmediato de tabiques de retención.

La distribución manual que fuese necesaria, será efectuada con palas, no con rastrillos. Los obreros no deberán caminar sobre el concreto recién colocado con las botas o zapatos cubiertos de tierra o sustancias extrañas.

Donde el concreto tenga que ser colocado junto a un carril de pavimento previamente construido y el equipo mecánico tenga que ser manejado sobre éste, el concreto de dicho carril existente deberá haber alcanzado la resistencia especificada para los 14 días. Si es solamente el equipo de acabado el que va a circular sobre el carril existente, la pavimentación de los carriles adyacentes se podrá permitir después de 3 días.

El concreto deberá ser consolidado cuidadosamente a lo largo y contra las caras de todas las formaletas, en toda la longitud y en ambos lados de todas las juntas, por medio de vibradores sumergidos en el concreto. No se permitirá que los vibradores entren en contacto con la armazón de ninguna junta, la subrasante o las formaletas laterales. En ningún caso se deberá operar un vibrador en un mismo lugar durante más de 5 segundos.

El concreto deberá ser depositado tan cerca como sea posible de las juntas de expansión y contracción, sin perturbarlas, pero no deberá ser arrojado del cucharón o dispositivo de descarga sobre la armazón de una junta, a menos que dicho dispositivo se encuentre centrado sobre la misma.

En caso de que un poco de concreto cayese o fuese empujado sobre la superficie de una losa terminada, deberá retirarse inmediatamente por medio de métodos aprobados.

3.2.1.10. Sección 501.12: Muestras para Ensayes de Campo

El Contratista deberá proveer el concreto necesario para moldear viguetas y cilindros de ensaye. Será moldeado un juego de 3 viguetas y 3 cilindros por cada 2,500 metros cuadrados o fracción, de pavimento colocado, pero no menos de dos juegos de 3 viguetas y 3 cilindros por cada día de trabajo. Las viguetas y cilindros deberán ser preparados y curados de acuerdo con AASHTO T 23.

Los requisitos para el ensaye de cilindros deberán aparecer estipulados en las CEC (Ver Cuadro 501-2).

3.2.1.11. Sección 501.13: Enrase del Concreto y Colocación del Refuerzo

Después de colocado el concreto, será enrasado para que se ajuste a la sección transversal y elevación mostradas en los planos. Cuando se vaya a colocar un pavimento de concreto reforzado en dos capas, la capa inferior deberá ser enrasada y consolidada en una longitud y profundidad tales que permitan colocar sobre el concreto la malla o barras de refuerzo en toda su longitud en su posición final y sin necesidad de más manipuleo. Entonces se colocará directamente el refuerzo sobre el concreto, después de lo cual se colocará, enrasará y conformará con el escantillón. Toda parte de la capa inferior que haya estado colocada por más de 30 minutos sin ser cubierta por la capa superior, deberá ser removida y reemplazada con concreto recién mezclado, por cuenta del Contratista. Cuando el concreto armado sea colocado en una sola capa, el refuerzo podrá ser colocado firmemente en su lugar con anticipación a la colocación del concreto, o podrá ser colocado a la profundidad mostrada en los planos en el concreto en estado plástico, haciendo uso de dispositivos mecánicos o vibratorios.

Las varillas para el refuerzo deberán estar libres de tierra, aceite, pintura, grasa, costra de escamas y sarro suelto o compacto, que podría disminuir la adherencia del acero con el concreto.

3.2.1.12. Sección 501.14. Juntas

Las juntas deberán ser construidas del tipo, las dimensiones y en los lugares requeridos por los planos o especificaciones especiales. Todas las juntas deberán ser protegidas de la intrusión de material extraño dañino mientras no hayan sido selladas.

2. Juntas Transversales de Expansión.- El relleno para la junta de expansión deberá ser continuo, de formaleta a formaleta, conformado según la subrasante y la muesca a lo largo de las formaletas. El relleno premoldeado para juntas será suministrado en longitudes iguales al ancho del pavimento o al de un carril. No se podrá usar relleno para juntas que haya sido dañado o reparado, a menos que fuese aprobado por el Ingeniero.

El relleno de la junta de expansión deberá quedar fijo en posición vertical. Si fuese requerido por el Ingeniero, se hará uso de una barra instaladora aprobada, u otro dispositivo, para asegurar que el relleno premoldeado para juntas de expansión quede en su rasante y alineación correctos durante la colocación y acabado del concreto. Las juntas ya acabadas no deberán desviarse más de 6 mm. de su alineación horizontal. Si los rellenos de juntas son ensamblados en secciones no deberán existir separaciones entre las unidades adyacentes. No se permitirán tapones de concreto en ninguna parte dentro del espacio disponible para la expansión.

3. Juntas Transversales de Contracción.- Las juntas transversales de contracción consistirán en secciones debilitadas creadas al moldear o al hacer cortes en la superficie del pavimento y, cuando lo indiquen los planos, incluirán unidades para transferencia de la carga.

3.1. Juntas Transversales de Contracción de Tira.- Estas juntas serán formadas instalando una tira separadora que se dejará en el espacio de la junta, según lo indiquen los planos;

3.2. Ranuras Moldeadas.- Estas juntas serán hechas insertando en el concreto plástico una herramienta o dispositivo aprobado, el cual deberá permanecer en su lugar, por lo menos, hasta que el concreto haya alcanzado su fraguado inicial; entonces, se sacará sin perturbar el concreto adyacente, a menos que el dispositivo esté diseñado para permanecer en la junta;

3.3. Juntas de Contracción Aserradas.- Estas juntas serán formadas aserrando ranuras en la superficie del pavimento, con el ancho, la profundidad, el espaciamiento y la alineación mostrados en los planos, utilizando una sierra para cortar concreto. Después de aserrar cada junta, esta deberá limpiarse cuidadosamente al igual que las superficies de concreto adyacentes.

El aserrado de dichas juntas deberá comenzarse de 4 a 24 horas después de haber colocado el concreto y cuando éste haya endurecido suficientemente para permitir el aserrado sin desmoronamiento excesivo.

Todas las juntas deberán ser aserradas antes de que ocurra un agrietamiento incontrolado debido a la contracción. Si fuera necesario, las operaciones de aserrado podrán efectuarse de día y de noche, sin importar las condiciones del tiempo. Se omitirá el aserrado de toda junta cerca de la cual se presenten grietas antes del momento del aserrado. También se suspenderá el aserrado cuando se presente una grieta adelante de la sierra. En general, todas las juntas deberán ser aserradas en secuencia. Si existieran condiciones climáticas extremas tales que sea imposible impedir el agrietamiento errático al aserrar tan pronto, la ranura de la junta de contracción deberá ser moldeada antes del fraguado inicial del concreto, de acuerdo con lo estipulado anteriormente;

3.4. Juntas Transversales de Contracción Moldeadas.- Estas juntas deberán satisfacer los requisitos del Artículo 501.14 (1) para juntas longitudinales moldeadas.

4. Juntas Transversales de Construcción.- Las juntas transversales de construcción serán construidas cuando haya una interrupción de más de 30 minutos en las operaciones de colocación del concreto. No se podrá construir una junta transversal a menos de 3 metros de distancia de una junta de expansión, junta de contracción o plano debilitado. Si no hay suficiente concreto mezclado para construir una losa que tenga, por lo menos, 3 metros de largo al ocurrir la interrupción, el concreto excedente hacia atrás hasta la última junta precedente, deberá ser removido y desechado de acuerdo con las órdenes del Ingeniero.

5. Dispositivos para la Transferencia de Cargas.- Cuando se usen espárragos para transferencia de cargas serán mantenidos en posición paralela a la superficie y la línea central de la losa por medio de un dispositivo de metal que se deja en el pavimento.

La parte de cada espárrago que va pintada con una mano de pintura de plomo o de alquitrán, según lo exige el Artículo 1009.01 de estas especificaciones, deberá ser recubierto con material bituminoso o un lubricante aprobado, a fin de evitar que el concreto se adhiera a esa parte del espárrago. En cada espárrago usado en juntas de expansión se proveerá una tapa o manguito que cumpla con los requisitos del Artículo 1009.01. Estas tapas o manguitos deberán quedar bien ajustados al espárrago y el lado cerrado deberá ser impermeable.

En vez de usar espárragos ensamblados en las juntas de construcción, será aceptable el uso de simples varillas colocadas en todo el espesor del pavimento por medio de algún dispositivo mecánico aprobado por el Ingeniero.

3.2.1.13. Sección 501.15: Esparcido, Consolidación y Acabado Finales

1. Secuencia.- La secuencia de las operaciones será la siguiente:

a. Colocación y Esparcido. b. Consolidación (Compactación o Vibrado). c. Conformación, Alisado Preliminar y Eliminación de Lechada. d. Verificación con Escantillón. e. Acabado Final.

El Contratista proveerá andamios de pasarela u otros dispositivos apropiados para que haya acceso a la superficie del pavimento y se faciliten las operaciones de verificación, acabado y corrección de deformaciones de acuerdo con lo especificado más adelante.

En general, no será permitido agregar agua a la superficie del concreto como ayuda en las operaciones de acabado; si esto fuera permitido, tendría que ser aplicada en forma de rocío por medio de algún dispositivo aprobado.

2. Acabado de las Juntas.- El acabado de las juntas será hecho de la manera siguiente:

2.1. El concreto contiguo a las juntas deberá ser densificado y colocado firmemente, sin vacíos ni segregación contra el material de las juntas lo mismo que alrededor y debajo de los dispositivos para la transferencia de cargas, unidades ensambladas para juntas, u otros aparatos diseñados para quedar embebidos en el pavimento. El concreto contiguo a las juntas deberá ser vibrado mecánicamente, según se exige en el Artículo 501.11;

2.2. Después de que el concreto haya sido colocado y vibrado a satisfacción en la parte adyacente a las juntas, según quedó estipulado en el Artículo 501.11, la máquina acabadora deberá adelantarse de modo que no cause daño o desviación en las juntas. Si la operación ininterrumpida de la máquina acabadora un poco antes, sobre e inmediatamente después de las juntas causara segregación del concreto, desalineamiento o daños en ellas, deberá detenerse su operación cuando la plantilla maestra delantera se encuentre, aproximadamente, a 20 cm., antes de la junta. El concreto segregado deberá ser eliminado del frente y fuera de la junta; la plantilla maestra delantera deberá ser levantada y colocada directamente encima de la junta y se reanudará entonces el movimiento hacia el frente de la máquina acabadora.

Cuando la segunda plantilla maestra se encuentre suficientemente cerca para permitir que el exceso de mortero al frente de la misma fluya sobre la junta, la plantilla maestra deberá ser levantada para que pase sobre la misma. De ahí en adelante la máquina acabadora podrá ser movida sobre la junta sin levantar las plantillas, siempre y cuando no haya concreto segregado inmediatamente entre la junta y la plantilla, ni encima de la junta.

3. Acabado a Máquina.-

3.2. Método Vibratorio.- Cuando esté especificada la vibración, el Contratista proveerá un tren de vibradores para trabajar en el ancho completo de las losas de concreto del pavimento, los cuales deberán satisfacer los requisitos del Artículo 501.04 (3.2). Si no se obtuviera por el método vibratorio una densidad uniforme y satisfactoria para el concreto en las juntas, a lo largo de las formaletas, en áreas adyacentes a estructuras y en cualquier lugar del pavimento, se le exigirá al Contratista que suministre equipo y métodos que puedan

producir un pavimento que satisfaga las especificaciones. Serán igualmente válidas todas las disposiciones del párrafo (3.1) que antecede, que no estén en contradicción con las especificadas para el método vibratorio.

5. Allanado.- Después de que el concreto haya sido enrasado y consolidado, será afinado y consolidado aún más, por medio de un codal longitudinal, empleando uno de los siguientes métodos, según esté especificado o permitido.

5.3. Método Mecánico Alterno.- Como alternativa al procedimiento descrito en el párrafo (5.2) que antecede, el Contratista podrá emplear una máquina compuesta de uno o varios codales cortantes y alisadores, suspendidos y guiados desde un marco rígido. Este marco deberá ir montado sobre cuatro o más ruedas visibles, que corran sobre y constantemente en contacto con las formaletas laterales.

Si se fuera siguiendo uno de los métodos de conformación y afinado descritos anteriormente, se podrán usar codales de no menos de 1.50 metros de largo por 15 centímetros de ancho provistos de brazos largos para su manipulación, para alisar y rellenar pequeñas áreas de textura abierta que tuviese el pavimento. Estos codales con brazos largos no serán usados para afinar toda la superficie del pavimento en sustitución, o suplementando a alguno de los métodos para conformar y afinar antes descritos. Cuando el enrasado y la consolidación sean efectuados por el método manual, y la corona del pavimento no permita el uso del codal longitudinal, la superficie podrá ser afinada transversalmente por medio de un codal de brazos largos, teniendo el cuidado de no eliminar la corona del pavimento durante la operación. Después del afinado, los excesos de agua y lechada deberán ser eliminados de la superficie del pavimento por medio de un escantillón de 3 m o más de largo. Este escantillón será arrastrado sobre la superficie del pavimento, traslapando las pasadas la mitad del largo del mismo.

6. Correcciones en la Superficie.- Después de concluídos la reconformación y afinado y de eliminar el exceso de agua superficial, pero mientras el concreto está aún en estado plástico, se procederá a rellenar las depresiones con concreto fresco y a conformarlo, consolidarlo y reacabarlo. Las áreas altas serán recortadas y reacabadas. Se dará especial atención a que la superficie que cruzan las juntas llene los requisitos de lisura. Las correcciones en la superficie continuarán hasta que toda la superficie del pavimento esté libre de deformaciones apreciables y la losa se ajuste lo más exactamente posible a la rasante y sección transversal típica requerida.

7. Acabado Final.- El tipo de acabado final será el que indiquen los planos. En caso de que la textura de la superficie correspondiera a un acabado con escobón, éste deberá aplicarse cuando haya desaparecido prácticamente todo rastro de agua libre. El escobón, deberá arrastrarse de orilla a orilla del pavimento, sin dañar los bordes del pavimento y traslapando ligeramente las pasadas contiguas. La operación del barrido deberá ser realizada de modo que los surcos producidos en la superficie sean uniformes en su aspecto y de una profundidad aproximada a 1.6 mm. El barrido deberá estar terminado antes de que el concreto se encuentre en tal condición que la superficie pueda ser rasgada o ponerse demasiado áspera por la operación. La superficie así acabada deberá estar exenta de partes ásperas y porosas, irregularidades y depresiones resultantes de un inadecuado manejo del escobón. Estos deberán ser de una calidad, tamaño y construcción y operadas de tal manera que produzcan un acabado en la superficie, que pueda ser aprobada por el Ingeniero. A condición de que se obtengan resultados satisfactorios y que lo apruebe el Ingeniero, el Contratista podrá substituir con el barrido mecánico el trabajo de barrido manual descrito anteriormente.

Si la textura superficial requerida corresponde a un acabado con rastra, se usará una rastra hecha de una banda de una sola pieza de tela de bramante, lona o tela de algodón húmeda, la cual dejará una superficie uniforme de textura arenosa después de ser arrastrada longitudinalmente a lo largo de todo el ancho del pavimento. Para pavimentos de 4.80 metros o más de ancho, la rastra será montada en un puentecillo que corra sobre las formaletas. Las dimensiones de la rastra serán tales que durante la operación de la misma una faja de tela de, por lo menos, 90 centímetros de ancho se mantenga en contacto con el ancho total del pavimento. Las rastras deberán tener no menos de dos capas de tela o lona, con la capa de abajo 15 centímetros, por lo menos, más ancha que la de arriba. La rastra será mantenida en tales condiciones que la superficie resultante sea de apariencia uniforme, con corrugaciones de, aproximadamente, 1.6 milímetros de profundidad. Las rastras serán mantenidas limpias y libres de adherencias de mortero. Las rastras que no puedan ser limpiadas deberán ser descartadas y sustituidas por nuevas.

8. Acabado de Bordes de Pavimento y Juntas.- Después del acabado final y antes de que el concreto haya alcanzado su fraguado inicial, los bordes del pavimento en los costados de cada losa, y a cada lado de las juntas transversales de construcción y juntas de construcción de emergencia, deberán ser acabados mediante una herramienta apropiada, redondeándolas al radio estipulado en los planos. El redondeado deberá ser bien definido y

continuo, y se deberá obtener un acabado fino con base de mortero denso. La superficie de la losa no deberá ser maltratada indebidamente por la inclinación de la herramienta durante el uso.

Cualquier marca de herramienta que aparezca sobre la losa adyacente a las juntas, deberá eliminarse mediante el uso de un escobón. Durante la operación de barrido no debe maltratarse ni dañarse la parte redondeada de la esquina de la losa. Todo el concreto que se encuentre encima del relleno de las juntas deberá ser eliminado completamente.

Todas las juntas deberán ser revisadas con un escantillón antes de que el concreto haya fraguado, y si un lado de la junta estuviera más alto que el otro, o si ambos hubieran quedado más altos o más bajos que las losas contiguas, se harán las correcciones necesarias.

3.2.1.14. Sección 501.18: Remoción de Formaletas

A menos que se hubiere dispuesto de otra manera, no se removerán las formaletas del concreto recién colocado, hasta que éste haya fraguado, por lo menos, 12 horas, exceptuando las formaletas auxiliares colocadas provisionalmente en áreas ensanchadas. Las formaletas deberán ser retiradas cuidadosamente, con el objeto de no causarle daños al pavimento. Después de que las formaletas hayan sido removidas, se someterán al proceso de curación los costados de las losas, de acuerdo con lo indicado en uno de los métodos descritos anteriormente.

Las áreas pequeñas que contengan ratoneras profundas cerca de las varillas del acero de refuerzo, deberán ser limpiadas, mojadas y parchadas con esmero, usando un mortero duro que contenga una parte de cemento por cada dos partes de agregado fino.

Las áreas grandes con ratoneras profundas serán consideradas como trabajo defectuoso, por lo que serán eliminadas y reconstruidas. Toda área o sección así removida no deberá tener menos de 3 metros de longitud ni menos del ancho total del carril afectado. Cuando sea necesario remover y reemplazar una sección de pavimento, toda parte restante de la losa adyacente a las juntas que tenga menos de 3 metros de longitud, deberá ser también removida y reemplazada.

3.2.1.15. Sección 501.19: Selladura de Juntas

Las juntas deberán ser selladas después de completar el período de curación y, si fuera posible, antes de que el pavimento sea abierto al tráfico aun del equipo del Contratista. Un poco antes de la selladura, se limpiará cada junta de todo material extraño incluyendo la membrana del compuesto para curación. Las caras de las juntas deberán estar limpias y con la superficie seca cuando sea aplicado el material de sellar.

El material de sellar será aplicado en la abertura de cada junta de acuerdo con los detalles mostrados en los planos o las órdenes del Ingeniero.

El sellador que deba ser aplicado en caliente, deberá ser agitado durante el proceso de calentamiento, a fin de evitar sobrecalentamiento localizado. El chorreado del material será hecho de tal manera que no se pringuen las superficies expuestas del concreto. Todo exceso de material que caiga sobre la superficie del pavimento de concreto deberá ser eliminado inmediatamente y la superficie, limpiada con esmero. No será permitido el uso de arena o material similar, como cobertura para sellar.

Todo empaque elastomérico premoldeado que se use en la selladura de juntas deberá tener una sección transversal con las dimensiones mostradas en los planos. Tales sellos serán colocados por medio de herramientas adecuadas, sin elongación, y asegurados en su sitio con adhesivos lubricantes aprobados que cubran ambos lados de la junta de concreto. Los sellos serán instalados bajo compresión y quedarán, al ser colocados, por debajo de la superficie del pavimento, aproximadamente, 6 milímetros.

Los sellos serán de una sola pieza para todo el ancho de cada junta transversal.

3.2.1.16. Sección 501.20: Protección del Pavimento

El Contratista deberá proteger el pavimento y sus aditamentos del tráfico público y el de sus propios empleados. Esta obligación incluirá vigilantes que dirijan el tráfico, la erección y mantenimiento de señales de prevención, luces de aviso, puentes sobre la superficie o pasarelas, etcétera. Los planos o las CEC indicarán la ubicación y tipo de instalación o dispositivos necesarios para proteger la construcción y proporcionar adecuadas facilidades al tráfico.

Cualquier daño causado al pavimento que ocurra con anterioridad a la aceptación final, deberá ser reparado y el tramo, eliminado y repuesto, según lo dispuesto en el Artículo-108.22.

3.2.1.17. Sección 501.21: Apertura al Tráfico

El Contratista deberá proteger el pavimento y sus aditamentos del tráfico público y el de sus propios empleados. Esta obligación incluirá vigilantes que dirijan el tráfico, la erección y mantenimiento de señales de prevención, luces de aviso, puentes sobre la superficie o pasarelas, etcétera. Los planos o las CEC indicarán la ubicación y tipo de instalación o dispositivos necesarios para proteger la construcción y proporcionar adecuadas facilidades al tráfico.

Cualquier daño causado al pavimento que ocurra con anterioridad a la aceptación final, deberá ser reparado y el tramo, eliminado y repuesto, según lo dispuesto en el Artículo-108.22.

3.2.1.18. Sección 501.23: Lisura del Pavimento

Después de que el concreto haya endurecido lo suficiente, mídase la lisura de la superficie.

a) Mediciones con el Perfilógrafo.- Mídanse las áreas excluidas de acuerdo con el inciso (b) a continuación. Las áreas defectuosas son topes en exceso de 10 mm en 7.62 metros, los índices de perfil en 0.1 de kilómetro que excedan de 160 mm por kilómetro, y las superficies con un factor de pago de menos de 0.75, determinado de conformidad con el Artículo-106.12.

(b) Medición con Escantillón.- Úsese un escantillón metálico de 3 metros de largo para medir en ángulo recto y paralelamente a la línea central de la vía. Las áreas defectuosas son aquellas que presentan desviaciones en exceso de 6 mm en 3 metros entre dos puntos de contacto cualesquiera del escantillón con la superficie.

(c) Corrección de Areas Defectuosas.- Corríjanse las áreas defectuosas detectadas según los incisos (a) y (b) precedentes. Obténgase aprobación del método propuesto para corregirlas. Vuélvanse a medir las áreas corregidas de conformidad con lo estipulado en los incisos (a) y (b) que preceden. El factor de pago será recalculado después de estas nuevas mediciones.

3.2.1.19. Sección 501.24: Tolerancia en el Espesor del Pavimento

El espesor del pavimento será determinado midiendo el espesor promedio de los núcleos de ensaye, de acuerdo con AASHTO T 24. Con el propósito de establecer un precio unitario ajustado para el pavimento, se consideran unidades separadas de 300 metros por cada carril de tráfico a partir del extremo del pavimento que tenga el estacionamiento más bajo. La última unidad en cada carril será de 300 metros más la fracción de 300 metros restantes. El Ingeniero tomará al azar un núcleo en cada unidad. Las deficiencias tolerables en el espesor del pavimento serán de 6 a 25 mm con respecto al espesor mostrado en los planos. Si la medida es deficiente en menos de 6 mm, se pagará el precio unitario completo. Si la medida es deficiente en más de 6 mm y no excede de 25 mm con respecto al espesor mostrado en los planos, se tomarán dos núcleos adicionales a intervalos no menores de 100 metros en el área correspondiente y se determinará el espesor promedio de estos tres núcleos y el precio unitario del área correspondiente será ajustado estadísticamente (Artículo-106.12).

Otras áreas, tales como intersecciones, entradas, vías elevadas, rampas, etc., serán consideradas como una unidad y el espesor de cada una de ellas se fijará separadamente. Las áreas con unidades pequeñas irregulares podrán ser incluidas como partes de otra unidad. En los puntos de cada unidad que el Ingeniero señale, se tomará un núcleo por cada 1,000 metros cuadrados de pavimento o fracción de los mismos. Se pagará el espesor total si el núcleo tomado de acuerdo al párrafo anterior, no fuese deficiente en más de 6 mm del espesor requerido. Si el núcleo fuese deficiente en más de 6 mm pero en menos de 25 mm del espesor requerido, se tomarán dos núcleos adicionales del área representada, y se calculará el promedio de los tres núcleos sacados.

Si la medida promedio de los espesores de estos tres núcleos no es deficiente en más de 6 mm ni en más de 25 mm del espesor requerido, el precio a pagar para el área representada será ajustado de conformidad con lo establecido en el Artículo-106.12.

Al calcular el espesor promedio del pavimento, las medidas que excedan del espesor especificado en más de 6 mm serán consideradas como del espesor especificado más 6 mm y las medidas que sean menores del espesor especificado en más de 25 mm, no serán incluidas en el promedio.

Cuando la medida de algún núcleo sea menor que el espesor especificado en más de 25 mm, el espesor efectivo del pavimento en esa área será fijado sacando núcleos exploratorios adicionales a intervalos no menores de 3 metros y paralelamente a la línea central en cada sección afectada, hasta que en cada dirección sea encontrado un núcleo que no sea deficiente en más de 25 mm de espesor. Las áreas que sean deficientes en espesor en más de 25 mm, serán evaluadas por el Ingeniero, y si de acuerdo a su criterio, estas áreas deficientes justifican su remoción, deberán ser removidas y repuestas con concreto del espesor

requerido. Los núcleos exploratorios sacados para investigar deficiencia de espesores no serán usados en la determinación de espesores promedios con fines de ajuste en el precio.

3.2.1.20. Sección 501.25: Aceptación

El material (exceptuando el acero de refuerzo) para el pavimento de concreto de cemento hidráulico, será evaluado visualmente y mediante certificación (Artículo-106.12). Se deberá suministrar un certificado de producción para el cemento Portland.

El revenimiento, contenido de aire, peso unitario de masa y la temperatura de la mezcla de concreto, serán evaluados visualmente y mediante mediciones y ensayes (Artículo-106.12). El Cuadro 501-2 muestra los requisitos mínimos para el muestreo y ensaye. El acero de refuerzo será evaluado bajo la Sección-604.

La resistencia del concreto a la compresión, el espesor del pavimento y la lisura de la superficie del pavimento, serán evaluados estadísticamente (Artículo-106.12). El Cuadro 501-2 muestra los requisitos mínimos para el muestreo y ensayes.

(a) Resistencia a la Compresión.- El límite más bajo de la especificación es la mínima resistencia a la compresión requerida a los 28 días (f'_c) especificada en el Cuadro 501-1. Un resultado simple de la resistencia a la compresión es el resultado promedio de 2 cilindros moldeados de la misma carga y ensayadas a los 28 días. El Cuadro 501-2 da la categoría de aceptación de las características de calidad.

(b) Espesor de Pavimento.- Ver Artículo-501.24. El límite más bajo de la especificación es el espesor requerido menos 6 milímetros. El Cuadro 501-2 da la categoría de las características de calidad.

(c) Lisura del Pavimento.- Ver Artículo-501.23. Un sublote es un tramo de vía de circulación y un lote es la superficie de todo el Proyecto. El límite superior de la especificación es de 80 mm por kilómetro. El Cuadro 501-2 da la categoría de aceptación de las características de calidad. La construcción (incluyendo la dosificación, colocación, acabado y curación del concreto) del pavimento de concreto de cemento Portland, será evaluada visualmente y mediante mediciones y ensayes (Artículo-106.12). El acero de refuerzo será evaluado bajo la Sección-604.

3.2.1.21. Sección 501.26: Método de Medición

Mídase el pavimento de concreto de cemento hidráulico por metro cuadrado. Para fines de pago, mídase el ancho horizontalmente incluyendo el sobreancho permisible en las curvas. La longitud será medida horizontalmente a lo largo de la línea central de la vía.

Mídase el sellamiento de juntas en metros, siguiendo el alineamiento de las juntas.

Mídase la remoción y disposición de materiales inadecuados en la subbase o subrasante, bajo la Sección-203.

Mídase el parcheo y el material de nivelación usado para reemplazar el material inadecuado del lecho de la vía, bajo las Secciones aplicables.

Mídase el acero de refuerzo colocado en la losa en los lugares mostrados en los planos o donde lo haya ordenado el Ingeniero, de acuerdo con lo dispuesto en el Artículo-604.08. Todo otro acero que se requiera para el trabajo de esta sección, no será objeto de pago.

3.2.1.22. Sección 501.27: Base para el Pago

Las cantidades aceptadas, medidas de acuerdo con lo estipulado en el artículo precedente, serán pagadas al precio de contrato por unidad de medida para los conceptos listados más adelante que figuren en el Pliego de Licitación, excepto que el precio unitario del pavimento de concreto de cemento hidráulico será ajustado estadísticamente (Artículo-106.12). El pago será compensación total por el trabajo prescrito en esta Sección.

Ver Artículo-106.03 y Artículo-110.04.

El pago por el pavimento de concreto de cemento hidráulico será hecho a un precio determinado multiplicando el precio unitario de contrato por el factor de pago del material. El factor de pago del material es el factor de pago simple más bajo determinado ya sea por la resistencia a la compresión o por el espesor de pavimento.

El pago será hecho bajo los siguientes conceptos:

Concepto de Pago		Unidad de Medida
501(1)	Pavimento de Concreto Hidráulico Reforzado, _____ mm de espesor.	Metro Cuadrado
501(2)	Pavimento de Concreto Hidráulico no Reforzado, _____ mm de espesor.	Metro Cuadrado
501(3)	Pavimento de Concreto Hidráulico de Alta Resistencia Inicial (Pago Adicional).	Metro cuadrado

El Cuadro 501-2 da los mínimos requisitos para Muestreo y Ensaye:

CUADRO 501-2
Muestreo y Ensayes

Material o Producto	Propiedad o Característica	Categoría	Método de Ensaye o Especificaciones	Frecuencia	Lugar del Muestreo
Concreto	Revenimiento	---	AASHTO T 119	1 por carga [2]	Chorro de descarga en el lugar de colocación [1]
	Contenido de aire	---	AASHTO T 152 ó AASHTO T 196	1 por carga [2]	Chorro de descarga en el lugar de colocación [1]
	Pesos Unitario	---	AASHTO T 121	1 por carga [2]	Chorro de descarga en el lugar de colocación [1]
	Temperatura	---	Termómetro	Primera carga	Chorro de descarga en el lugar de colocación [1]
	Hechura de Especimenes de Ensayes	---	AASHTO T 23	1 Juego por 2000 m³ pero no menos de 1 por dia [3]	
	Resistencia a la Compresión [4]	II	AASHTO T 22		
Pavimento de Concreto	Espesor de Pavimento [5]	II	AASHTO T 24	1 núcleo por cada 2000 m²	En el sitio, después de endurecido lo suficiente.
	Lisura	I	FLH T 504	Ver Art. 501.23	Ver Art. 501.16

(1) Muestrear según AASHTO T 141, excepto que no serán necesarias las muestras compuestas.
(2) Ver Artículo 602.03 (t) para el máximo contenido de aire.
(3) Moldear, por lo menos 4 cilindros de ensaye para resistencia a la compresión y transportarlos cuidadosamente al sitio de la obra donde hay facilidades para curarlos.
(4) Un resultado simple del ensaye de resistencia a la compresión es el resultado promedio de 28 cilindros moldeados de la misma carga y ensayados a los 28 días.
(5) El espesor no es un parámetro evaluado estadísticamente a menos que el pago del pavimento de concreto sea pagado en metros cuadrados.

3.3. SUBDIVISIÓN 600: PUENTES

3.3.1. SECCIÓN 601: PILOTES

3.3.1.1. Sección 601.01: Descripción

Este trabajo consiste en el suministro e hincadura de pilotes de acuerdo con estas especificaciones y en conformidad razonable con los planos o las órdenes del Ingeniero.

Los pilotes son designados como pilotes de acero con perfil en H, pilotes de cubierta de acero rellena con concreto, pilotes de tubos de acero relleno con concreto, pilotes de concreto premoldeado, pilotes de concreto presforzado o pilotes de madera. Las pruebas de carga para pilotes son designadas como estáticas o dinámicas.

3.3.1.2. Sección 601.02: Materiales

Los materiales deberán cumplir con lo establecido en las siguientes secciones y artículos:

Pilotes de Concreto-Artículo-1015.03

Zapatas para Pilotes-Artículo-1015.08

Acero de Refuerzo- Sección-604

Cubiertas de Acero-Artículo-1015.04

Concreto Estructural- Sección-602

3.3.1.3. Sección 601.11: Pruebas de Carga de Pilotes

Las pruebas de carga de pilotes no serán requeridas, a menos que estén especificadas en las CEC.

3.3.1.4. Sección 601.12: Recorte de Pilotes

Se deberá recortar, a la elevación requerida, la parte superior de todos los pilotes y sus camisas. Los pilotes deberán ser recortados limpiamente en forma recta y paralelamente al nivel de desplante del miembro estructural en el cual van a estar empotrados.

Se deberá disponer de los trozos recortados de acuerdo con el Artículo-202.02.

3.3.1.5. Sección 601.14: Colocación del Concreto en Pilotes de Camisa o Tubo de Acero

Después de la hincadura límpiese el interior de la camisa o tubo eliminando todo material suelto. La camisa o el tubo deberá ser mantenido sustancialmente hermético. Se deberá proveer equipo apropiado para inspeccionar plenamente la superficie interna de la camisa o tubo, un poco antes de colocar el concreto.

(a) Acero de Refuerzo.- Cuando sea requerido el uso de acero de refuerzo, el espaciamiento entre los elementos adyacentes de la jaula deberá ser, por lo menos, 5 veces el tamaño máximo del agregado que va en el concreto.

Se amarrarán firmemente los espaciadores de concreto u otros espaciadores aprobados en los quintos puntos, alrededor del perímetro de la jaula de acero de refuerzo. Los espaciadores deberán ser instalados a intervalos que no excedan de 3 metros medidos a lo largo de la longitud de la jaula.

La jaula de refuerzo deberá ser colocada dentro del pilote de camisa o tubo hincado cuando el concreto alcance la elevación planeada del fondo del refuerzo. Se deberá sostener de tal manera que permanezca dentro de 50 mm de la localización vertical requerida. La jaula deberá ser sostenida desde arriba hasta que el concreto alcance la parte superior del pilote.

(b) Concreto.- La preparación y colocación del concreto se regirá por lo estipulado en la Sección-602. El concreto deberá ser colocado en una operación continua desde el fondo hasta la parte superior del pilote. Antes del fraguado inicial del concreto, se deberá consolidar los 3 primeros metros de la parte superior del pilote de concreto usando equipo vibratorio aprobado.

3.3.1.6. Sección 601.15: Aceptación

El material del pilote será evaluado visualmente y mediante certificados aceptables del Fabricante o laboratorios independientes Artículo-106.12. Con cada embarque, el Contratista deberá presentar certificados de producción de lo siguiente:

(a) Pilotes de concreto.

(b) Tablestacas de lámina de acero, pilotes de acero de perfil H, pilotes de camisa o tubo de acero.

El concreto para pilotes de camisa o tubos de acero rellenados con concreto, serán evaluados bajo la Sección-602.

El acero de refuerzo para pilotes de camisa o tubo de acero rellenos con concreto, serán evaluados bajo la Sección-604.

3.3.2. SECCIÓN 602: CONCRETO ESTRUCTURAL

3.3.2.1. Sección 602.01: Descripción

Este trabajo consiste en el suministro, colocación, acabado y curación del concreto en puentes, alcantarillas y otras estructuras, de acuerdo con estas especificaciones y en conformidad razonable con las líneas, rasantes y dimensiones mostradas en los planos u ordenadas por el Ingeniero.

La clase del concreto estructural es designada según lo indicado en el Cuadro 602-1.

3.3.2.2. Sección 602.02: Materiales

Los materiales a usar deberán cumplir con lo estipulado en los siguientes artículos:

Aditivos Inclusores de Aire-Artículo-1011.02

Aditivos Químico-Artículo-1011.03

Agregado grueso - Artículo1003.02

Colorante para Revestir - Artículo-1012.04

Materiales para Curar-Artículo-1011.01

Almohadillas Elastoméricas de Apoyo - Artículo-1017.13

Sellos Elastoméricos para Juntas de Compresión - Artículo-1017.18

Agregado Fino - Artículo-1003.01

Ceniza Fina de Altos Hornos (CFAH) - Artículo-1012.10

Escoria de Hornos de Fundición de Hierro Molida - Artículo-1012.10

Rellenadores y Selladores de Juntas - Artículo-1005.01

Modificador de Látex - Artículo-1011.04

Aceite de Linaza - Artículo-1012.09

Cemento Portland - Artículo-1001.01

Humo Silíceo (Microsílice) - Artículo-1012.10

Agua - Artículo-1012.01[a]

3.3.2.3. Sección 602.03: Requisitos para la construcción: Composición (Diseño de la Mezcla de Concreto)

Diséñense y produzcanse las mezclas de concreto que se ajusten a lo indicado en el Cuadro 602-1 para la clase de concreto especificado. Determínense los valores de la resistencia de diseño de conformidad con la norma ACI 214. El concreto estructural también deberá cumplir con las siguientes especificaciones:

- ACI 211.1, para concreto normal y de masa pesada.
- ACI 211.2, para concreto liviano.
- ACI 211.3, para concreto sin revenimiento.

CUADRO 602-1
Composición del Concreto

Clase de Concreto	Contenido Mínimo de Cemento (kg/m³)	Máxima Relación Agua/ Cemento	Revenimiento(1) (mm)	Mínimo Contenido de Aire (2) %	Agregado Grueso AASHTO M 43
A	360	0.49	50 to 100		No. 57
A (AE)	360	0.44	25 to 100	5.0	No. 57
B	310	0.58	50 to 100		No. 357
B (AE)	310	0.58	50 to 100	4.0	No. 357
C	390	0.49	50 to 100		No. 7
C (AE)	390	0.44	25 to 75	6.0	No. 7
D (AE) (3)	360	0.40	25 to 75	4.0	No. 57
E (AE) (4)	360	0.40	100 to 150 (5)	3.0	No. 7
P	390	0.44	0 to 100		No. 67
Sello	390	0.54	100 to 200		No. 57

(1) El revenimiento máximo es de 200 mm, si el diseño aprobado por la mezcla incluye un reductor de agua de alto rango.

(2) Ver el Artículo 602.03 (t) para el máximo contenido de aire.

(3) Concreto con un aditivo reductor de agua y retardador conforme a AASHTO M 194 tipo D.

(4) Concreto modificado con látex con 0.31 litros de modificador por kilogramo de concreto.

(5) Mídase el revenimiento 4 ó 5 minutos después de que el concreto es descargado del mezclador.

Sómetanse los diseños de la mezcla. (Se recomienda un Formulario igual o similar al 608 de la FHWA.

Verifíquense los diseños de la mezcla por medro de mezclas de prueba preparadas con los materiales de la(s) misma(s) fuentes propuestas para uso en la obra. Sométanse los diseños de la mezcla de concreto por escrito para la aprobación del Ingeniero, por lo menos, 36 días calendario antes de iniciar la producción. Cada propuesta de diseño de mezcla deberá incluir todo lo enumerado a continuación:

(a) Identificación del Proyecto.

(b) Nombre y dirección del Contratista y de productor del concreto.

(c) Designación del diseño de la mezcla.

(d) Clase de concreto y el uso que se le va a dar.

(e) Proporciones del material.

(f) Nombre y lugar de las fuentes del agregado, el cemento, los aditivos y del agua.

(g) Tipo de cemento y tipo de sustituto del cemento si se usa. La CFAN, escoria de hornos de fundición de hierro molida, o humo silíceo, puede reemplazar parcialmente al cemento en cualquier diseño de mezcla tal como se indica a continuación, excepto en el concreto presforzado:

(1) CFAH.

(1) Clase F.- No más del 20% del peso mínimo de cemento Portland indicado en el Cuadro 602-1 puede ser reemplazado con CFAH clase F a una tasa de 1.5 partes de CFAH por una parte de cemento.

(2) Clase C.- No más del 25% del peso mínimo de cemento Portland indicado en el Cuadro 602-1, puede ser reemplazado con CFAH clase C a una tasa de 1 parte de CFAH por una parte de cemento.

(2) Escoria de Horno de Fundición de Hierro Molida.- No más del 50% del peso mínimo de cemento Portland indicado en el Cuadro 602-1 puede ser reemplazado con escoria de horno molida a una tasa de 1 parte de escoria por una parte de cemento.

(3) Humo Silíceo (Microsílica).- No más del 10 por ciento del peso mínimo de cemento Portland indicado en el Cuadro 602-1, puede ser reemplazado con humo silíceo a una tasa de 1 parte de humo silíceo por una parte de cemento.

La relación agua/cemento para concreto modificado es la relación del peso de la masa de agua de las masas combinadas de cemento Portland y sustituto del cemento.

(h) El contenido de cemento en kilogramos por metro cúbico de concreto.

(i) El peso de la bachada de agregados grueso y fino saturados con la superficie seca, en kilogramos por metro cúbico de concreto.

(j) Contenido de agua (incluyendo la humedad libre en el agregado más el agua en el tambor, excluyendo el agua absorbida en el agregado), en kilogramos por metro cúbico de concreto.

(k) Valor meta de la relación agua/cemento.

(l) Dosis de los Aditivos. La inclusión de aire puede ser obtenida ya sea usando cemento Portland con aire incorporado o mediante el uso de un aditivo inclusor de aire. No usar aditivos químicos de manufactureros diferentes. No usar aditivos reductores de agua de alto rango en losas de puentes.

(m) Análisis granulométrico del agregado fino y del grueso.

(n) Absorción de los agregados fino y grueso.

(o) Gravedad Especifica de Masa (seco y saturado con superficie seca) de los agregados fino y grueso.

(p) Peso unitario del agregado grueso varillado en seco, en kilogramos por metro cúbico.

(q) Módulo de finura (MF) del agregado fino.

(r) Certificaciones de material para el cemento, aditivos y los agregados.

(s) Valor meta para el revenimiento del concreto con aditivo reductor de agua de alto rango y sin el.

(t) Valores meta para el contenido de aire en el concreto. Incluir el rango propuesto del contenido de aire propuesto para ser incorporado en la obra. Describir los métodos mediante los cuales será monitoreado y controlado el contenido de aire. Provéase documentación aceptable que asegure que el revenimiento y la resistencia a la compresión del concreto están dentro de los límites especificados a través del rango total del contenido de aire propuesto. En ausencia de dicha documentación aceptable, el máximo contenido de aire será 10 por ciento.

(u) Unidad de masa (peso) del concreto.

(v) Resistencias a la compresión del concreto a los 7 y a los 28 días. Pendiente de lo resultados, de la resistencia a los 28 días, se podrá aprobar un diseño de mezcla, siempre que los resultados de la resistencia a la compresión a los 7 días sean iguales o excedan al 85 por ciento de los requerimientos mínimos de resistencia, cuando no sean usados aditivos aceleradores de fraguado o cemento de alta resistencia inicial.

(w) Muestras de los materiales, si son pedido por el Ingeniero.

Comenzar la producción solamente después de que el diseño de la mezcla haya sido aprobado.

Suministrar un nuevo diseño de la mezcla para aprobación, si hay un cambio en una fuente de los materiales o cuando el módulo de finura del agregado fino cambie en más de 0.20.

Los costos de las pruebas para diseñar la mezcla serán por cuenta del Contratista.

3.3.2.4. Sección 602.04: Acopio y Manipulación del Material

Acópiense y manipúlense todos los materiales de manera que no se produzcan segregación, contaminación u otros efectos perjudiciales. No usar cemento y CFAH que contengan evidencia de contaminación con humedad. Acópiense y manipúlense los agregados de una manera que asegure un contenido de humedad uniforme en el momento de la bachada.

3.3.2.5. Sección 602.05: Medición de los Materiales

Dosificar el concreto de conformidad con el diseño aprobado para la mezcla y las siguientes tolerancias:

Cemento ± 1 por ciento

Agua ± 1 por ciento

Agregados ± 2 por ciento

Aditivo ± 3 por ciento

Se podrá usar un sistema volumétrico calibrado si se mantienen las tolerancias especificadas.

3.3.2.6. Sección 602.06: Planta Dosificadora, Mezcladoras y Agitadores

Úsese una planta dosificadora, mezcladora y agitador que se ajusten a lo requerido por la norma AASHTO M 157. El equipo de revoltura volumétrico continuo se deberá ajustar a lo requerido por la norma AASHTO M 241.

3.3.2.7. Sección 602.07: Revoltura

Revolver el concreto en una planta de revoltura central o en camiones mezcladores. Todo el equipo deberá ser operado dentro de la capacidad recomendada por el Fabricante. Prodúzcase concreto de consistencia uniforme.

(b) Camión Mezclador.- No usar mezcladoras que tangan cualquier sección de las paletas desgastada más de 25 mm ó más por debajo de la altura original de fábrica. No usar mezcladoras y agitadores que tengan concreto o mortero acumulado en el tambor de revoltura.

Agregar los aditivos al agua de revolver antes o durante la revoltura.

Cargar la bachada en el tambor de manera que una porción del agua de revolver entre antes que el cemento.

Revolver cada bachada de concreto no menos de 70 ni más de 100 revoluciones del tambor o de las paletas a la velocidad de revoltura.

Comenzar a contar las revoluciones de revoltura tan pronto como todo el material, incluyendo el agua, este dentro del tambor de revolver.

3.3.2.8. Sección 602.05: Entrega

Prodúzcase y entréguese el concreto de manera que se permita una colocación continua sin que ningún concreto alcance el fraguado inicial antes que el concreto restante a ser colocado adyacente a él. Úsense métodos de entrega manipuleo y colocación que minimicen la remanipulación del concreto y evitar causar cualquier daño a la estructura.

No colocar concreto que haya desarrollado el fraguado inicial. Nunca se deberá ablandar el concreto agregando agua.

(a) Camión Mezclador/Agitador.- Úsese la velocidad de agitación para toda rotación después de la revoltura. Cuando se usa un camión mezclador o agitador para transportar concreto que está completamente revuelto en una mezcladora de construcción central estacionaria, revuélvase durante el transporte a la velocidad de agitación recomendada por el Fabricante.

El agua y los aditivos (si están aprobados en el diseño de la mezcla) pueden ser agregados en el Proyecto a fin de obtener el revenimiento o contenido de aire requeridos, siempre que el total de agua en la mezcla no exceda la relación agua/cemento máxima y que el concreto no haya obtenido un fraguado inicial. Si se necesita agua adicional, agréguese solamente una vez y revuélvase con 30 revoluciones a la velocidad de revoltura. Complétese la revoltura extra dentro de 45 minutos (45 minutos para cementos de los tipos I, IA, II ó IIA con aditivos reductores de agua/retardadores de fraguado) después de la introducción inicial del agua de revoltura al cemento o del cemento a los agregados.

Después de comenzar la adición del cemento, complétese la descarga del concreto dentro del tiempo especificado en el Cuadro 602-2:

CUADRO 602-2
Límites de Tiempo para la Descarga del Concreto

Tipo de Cemento Con Aditivos o sin ellos	Límite de Tiempo (Hora)
Tipo I, IA, II ó IIA	1.00
Tipo I, IA, II ó IIA con aditivo reductor de agua o retardador de fraguado.	1.50
Tipo III.	0.75
Tipo III con aditivo reductor de agua o retardador del fraguado.	1.25

(b) Equipo no Agitador.- Se podrá usar equipo no agitador para entregar el concreto si la descarga del concreto es completada dentro de 20 minutos desde el comienzo de la adición del cemento en el tambor de revoltura.

Úsese equipo provisto de contenedores metálicos lisos y herméticos al mortero, capaces de descargar el concreto a una velocidad controlada sin segregación. Provéanse carpas cuando sea necesaria la protección.

3.3.2.9. Sección 602.09: Control de Calidad-Muestreo y Ensaye

Para asegurar la calidad del diseño de la mezcla y el control de calidad en las operaciones, se seguirá un plan de control de calidad que incluye el muestreo y ensaye de los materiales y la mezcla de acuerdo con las siguientes normas:

a. Muestreo de Concreto Recién Mezclado	T-141
b. Peso por Metro Cúbico, Rendimiento y Contenido de Aire (Gravimétrico) del Concreto.	T-121
c. Análisis Granulométrico de Agregados Fino y Grueso.	T-27
d. Revenimiento del Concreto de Cemento Portland.	T-119
e. Contenido de aire del Concreto Recién Mezclado por el Método de Presión.	T-152
f. Gravedad Específica y Absorción del Agregado Fino.	T-84
g. Gravedad Específica y Absorción del Agregado Grueso.	T-85
h. Contenido de Aire del Concreto Recién Mezclado por el Método Volumétrico.	T-196
i. Moldeo y Curado en el Campo de Especímenes de Concreto para los Ensayos de Resistencia a la Compresión y a la Flexión.	T-23
j. Resistencia a la Compresión de Cilindros de Concreto Moldeado .	T-22

Las siguientes disposiciones sobre Muestreo y Ensaye serán aplicables y prevalecerán en cualquier discrepancia que hubiere con los métodos estándar enumerados anteriormente:

A.- El control del concreto será hecho por medio de cilindros. Se tomará una muestra por cada 25 metros cúbicos, con un mínimo de tres muestras por elemento estructural (estribo, pila, losa, etc.).

El suministro de cilindros, las pruebas o ensayes, así como todo lo necesario para el muestreo y ensaye del concreto, serán subsidiarios del costo del concreto.

B.- El Ingeniero podrá ordenar un número adicional de cilindros de pruebas durante la ejecución de los trabajos, ya sea para someterlas a curado en las mismas condiciones en que el concreto es colocado en la estructura, para determinar el grado de eficiencia del curado del concreto en el sitio o para obtener testigos de pruebas adicionales para un mejor control.

C.- Las pruebas de resistencia serán realizadas a los 7 y a los 28 días de mezclado el concreto.

La cantidad de muestras para el control de resistencia será de, por lo menos, 2 cilindros para cada fecha en que se quiera conocer la resistencia del concreto.

D.- *Resistencia de Diseño.* Las resistencias promedio de diseño, serán obtenidas de acuerdo a las resistencias de la clase de concreto especificado, de conformidad con el siguiente cuadro:

CUADRO 602-3
Resistencia de Diseño

Condiciones Previstas para la Colada	Resistencia Media para Estructuras Diseñadas en Función del Esfuerzo de Trabajo	Resistencia Media para Estructuras Presforzadas o diseñadas en Función del Esfuerzo Ultimo
Medias	$f_m = f''_c \times 1.35$	$f_m = f'_c \times 1.5$
Buenas	$f_m = f'_c \times 1.28$	$f_m = f'_c \times 1.35$
Muy Buenas	$f_m = f'_c \times 1.20$	$f_m = f'_c \times 1.25$

Donde:

fm = Resistencia media de diseño y

f 'c = Resistencia especificada para el concreto a los 28 días de edad, denominada resistencia característica.

Las condiciones previstas de ejecución de la colada adoptadas en el cuadro anterior, corresponden a las siguientes:

Condiciones Medias. Cemento sin conservación adecuada y sin comprobaciones frecuentes de su estado. Agregados medidos por volumen por procedimientos aparentemente eficaces, pero de precisión no comprobada. Falta de correcciones en los volúmenes de arena utilizados cuando varía la humedad de esta y por tanto, su contracción. Cantidad de agua bien medida al ser alimentada a la mezcladora, pero sin ajustar por la humedad contenida en la arena.

Buenas Condiciones. Cemento bien conservado, con frecuentes comprobaciones de su calidad. Agregados cuidadosamente medidos por volumen, con corrección en los volúmenes de arena a causa de su contracción. Reajuste en la cantidad de agua alimentada a la mezcladora cuando varía notablemente la humedad de los agregados. Vigilancia al pie de la obra con el equipo mínimo necesario para efectuar las comprobaciones oportunas.

Condiciones Muy Buenas. Control estricto de la calidad del cemento y de la relación agua/cemento. Agregados medidos por peso con determinaciones periódicas de la graduación y la humedad. Control de la consistencia del concreto. Laboratorio al pie de la obra con el personal y las instalaciones necesarias en cada caso. Constante atención a todos los detalles de la operación, tales como la falta de calibración de las básculas, cambios en el contenido de cemento, etc.

E.- Evaluación de las resistencias. Para evaluar los resultados de la resistencia del concreto se hará uso de los siguientes criterios:

I. La resistencia del concreto para estructuras diseñadas en función del esfuerzo de trabajo y otras construcciones no consideradas en el inciso II que sigue, no deberá dar más de un 20 porciento de valores más bajos que la resistencia característica y el promedio de seis pruebas consecutivas deberá ser igual o mayor que el esfuerzo promedio especificado.

II. Para concreto a ser usado en estructuras diseñadas en función del esfuerzo último y en estructuras presforzadas, no más del 10 por ciento de las pruebas de resistencia darán valores menores que la resistencia característica especificada, y el promedio de tres pruebas consecutivas deberá ser igual o mayor que el esfuerzo promedio especificado.

Cuando el número de pruebas realizadas en toda clase de concreto sea de 6 ó menos, el promedio de todas las pruebas deberá ser igual o mayor que el mostrado en el siguiente Cuadro:

CUADRO 602-4
Esfuerzo Promedio Requerido en Pruebas Consecutivas
Como Fracción de la Resistencia Característica

Número de Pruebas	Inciso I	Inciso II
1	0.79	0.86
2	0.90	0.97
3	0.94	1.02
4	0.97	1.05
5	0.99	1.07
6	1.00	1.08

Resistencia Mínima. Cuando el esfuerzo de compresión del concreto de una estructura o parte de ella sea menor que el 85 por ciento de la resistencia característica f 'c, especificada a los 28 días, dicha estructura, o la parte afectada, será demolida.

En caso de discrepancia de criterios sobre la resistencia del concreto colocado, se obtendrá un mínimo de cuatro núcleos del concreto cuya calidad está en duda, de acuerdo a la Norma AASHTO T-24, para verificar los resultados obtenidos y el costo de este trabajo adicional será por cuenta del Contratista.

3.3.2.10. 602.10: Condiciones de Temperatura y del Tiempo

Manténgase la temperatura de la mezcla de concreto un poco antes de sus colocación, entre 10 y 30º C, excepto que en las losas de puente se limitará entre 10 y 25ºC.

(a) Tiempo Frío.- Se entenderá como tiempo frío cuando la temperatura ambiental en el sitio cae a menos de 10ºC por un período de 12 horas o más. Prácticamente, esta condición no existe en Nicaragua.

(b) Tiempo Caliente.- Se entiende por tiempo caliente cualquier tiempo durante la colocación del concreto en que la temperatura ambiental en el sitio del trabajo es de más de 35ºC.

En tiempo caliente, enfríense todas las superficies que van a entrar en contacto con la mezcla de concreto, a menos de 35ºC. Cúbranse con tela de bramante o esterillas de algodón humedecidas, rociando con agua, cubriendo con toldos o mediante otros métodos aprobados.

Durante el colado del concreto, manténgase la temperatura del concreto, usando cualquier combinación de las siguientes medidas:

(1) Dese sombra a áreas de acopio de material o al equipo de producción.

(2) Enfríese el agregado rociándolo con agua.

(3) Enfríese el agregado, el agua o ambos por refrigeración o reemplazando una porción o toda el agua de revoltura con hielo en hojuelas o triturado al grado de que el hielo se derrita completamente durante la revoltura del concreto.

Cuando se coloque concreto en losas de puentes u otras losas expuestas, limítese la tasa de evaporación esperada a menos de 0.5 kilogramos por metro cuadrado por hora determinada por la Figura 602-1 ó la siguiente fórmula:

Donde:

$$EVAP = \frac{1+0.2374VV}{2906} * \left[TC^2 - 4.762\,TC + 220.8 - HR * \left[\frac{AT^3 + 127.8TA^2 + 665.6TA + 34283}{20415} \right] \right]$$

EVAP =Tasa de evaporación (kg/m2/hr)

VV = Velocidad del viento (km/hr)

HR = Humedad relativa (%)

TA = Temperatura del aire (°C)

TC = Temperatura del concreto (°C)

Cuando sea necesario, tómese una o más de las siguientes acciones:

(1) Constrúyanse cortinas rompe vientos o encierros en toda el área de la colada.

(2) Úsense rociadores de agua en forma de niebla contra el viento de la operación de colocación del concreto a fin de aumentar efectivamente la humedad relativa.

(3) Redúzcase la temperatura del concreto de acuerdo con lo dicho en el inciso (b) que antecede.

(d) Lluvia.- Todo el tiempo durante e inmediatamente después de colada el concreto, protéjaselo de la lluvia.

3.3.2.11. Sección 602.11: Obras Falsa y Formaletas

(a) Obra Falsa.- Constrúyase la obra falsa sobre fundaciones de suficiente resistencia para soportar las cargas sin asentamiento apreciable. La obra falsa que no puede ser fundada en zapatas sólidas y firmes, deberá ser soportada por medio de pilotes al grado que sea necesario.

Diséñese y constrúyase la obra falsa para soportar las cargas totales aplicadas, con una deflexión que no exceda 1/500 del claro de la obra falsa y ajustada para dar a la estructura terminada las líneas y niveles mostrados en los planos u ordenados por el Ingeniero. Incorpórense a la obra falsa las gatas mecánicas o cuñas que sean necesarias para compensar cualquier asentamiento que ocurra en la obra falsa antes o durante la colocación del concreto. Constrúyanse las cimbras de tal manera que permitan ser bajadas gradual y uniformemente.

Prepárense de acuerdo con el Artículo-106.02, planos y dibujos de trabajo para la obra falsa.

(b) Formaletas.- Las formaletas deberán satisfacer los siguientes requisitos:

1. Generalidades.- Háganse las formaletas suficientemente rígidas para evitar su distorsión a causa de la presión del concreto y otras cargas eventuales durante las operaciones de construcción, incluyendo la vibración. Constrúyanse y consérvense las formaletas de manera que no se abran las juntas debido a la contracción de la madera.

2. Superficies Visibles.- Las formaletas para todas las superficies de concreto que vayan a quedar visibles serán de uno de los tipos siguientes:

a) Revestidas con plywood, para exteriores, con el hilo de la cara paralelo a los soportes;

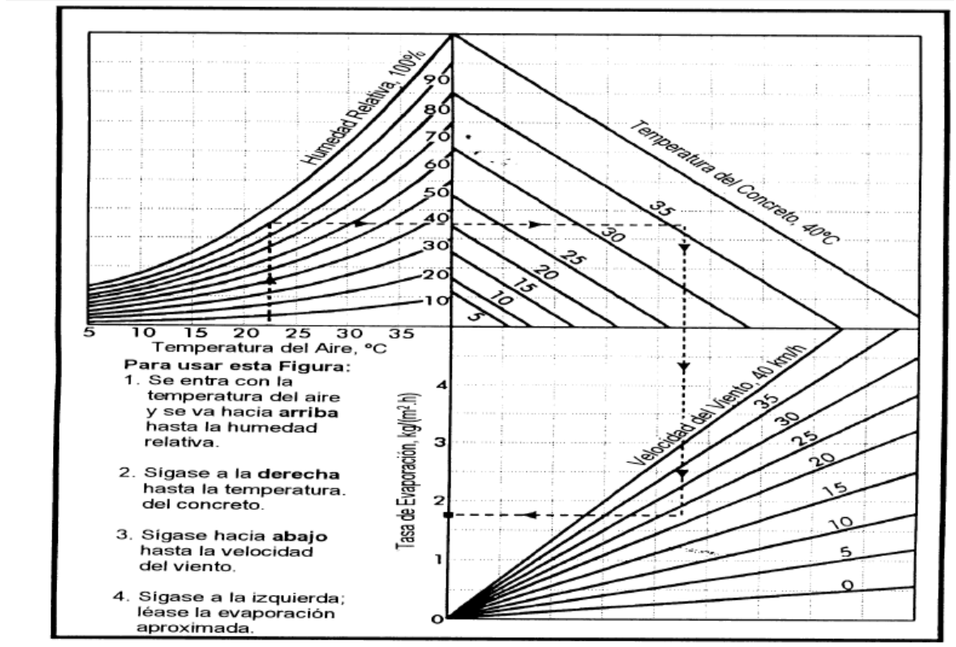

Figura 602-1

Tasa de Evaporación de la Humedad Superficial

Nota: El ejemplo mostrado por la línea de rayas discontinuas es para una temperatura de aire de 22.5°C, humedad relativa de 90 por ciento, temperatura del concreto de 36°C y una velocidad del viento de 22.5 KPH. Esto da una tasa de evaporación de 1.75 kg/m²/hora.

b) Madera cepillada, por lo menos en un lado y dos bordes; No usar residuos o ripios de madera para completar las piezas.

c) De metal. (Sin abolladuras).

Fabríquense las formaletas con juntas herméticas al mortero y con superficies que produzcan caras lisas y uniformes en el concreto. Las formaletas serán achaflanadas y ochavadas, como lo indiquen los planos y déjese un bisel u ochava en todos los salientes, como en vigas y remates para facilitar su remoción.

3. Amarres de Metal.- Constrúyanse los amarres de metal o anclajes que van dentro de los moldes de manera que permitan su remoción hasta una profundidad de, por lo menos, 25 mm de la superficie sin dañar el concreto. Cuando sean permitidos los amarres de alambre, hágase uso de conos adecuados. Rellénense las cavidades con mortero de cemento, dejando la superficie lisa, pareja y de color uniforme.

4. Muros.- Cuando el fondo de las formaletas sea inaccesible, déjense las tablas del fondo sueltas o recúrrase a otro expediente que permita eliminar todo material extraño o suciedad inmediatamente antes de colar el concreto.

5. Tratamiento de la Superficie.- Trátense todas las caras internas de las formaletas con un aceite aprobado (no quemado), antes de colocar el refuerzo y, además, humedézcanse las formaletas de madera inmediatamente antes de colar el concreto. No permitir el uso de ningún material o tratamiento que deteriore, se adhiera o decolore el concreto.

6. Formaletas de Metal.- Las especificaciones para las formaletas de madera, en lo que se refiere a diseño, hermetismo al mortero, esquinas ochavadas, resaltes biselados, arriostramiento, alineación, remoción, reuso y aceitado, serán igualmente aplicables a las formaletas de metal.

No permitir el uso de formaletas permanentes con metal debajo de losas, a menos que se indique en los planos. El metal empleado para la formaleta deberá ser de tal espesor que mantenga su forma debida. Empótrense todas las cabezas de pernos y remaches. Las grapas, espigas y otros dispositivos de empalme serán de un diseño tal que mantengan las formaletas unidas rígidamente y permitan su remoción sin dañar el concreto. No permitir el uso de formaletas que no presenten una superficie lisa o que no dejen una alineación apropiada. Consérvense las formaletas metálicas libres de herrumbre, grasa y otras materias extrañas.

7. Formaletas de Acero Permanentes para Losas de Puentes.- No permitir el uso de formaletas metálicas permanentes, o sea, que queden formando parte de la estructura, bajo las losas del piso de puentes, vías elevadas o cajas de concreto, a menos que lo indiquen los planos.

Fabríquense las formaletas de este tipo y sus soportes de acero que llene los requisitos de la Norma ASTM A 446 (Grados A a E) con un recubrimiento de clase G165, de acuerdo a la Norma ASTM A 525.

Instálense todas las formaletas de conformidad con planos aprobados de fabricación y montaje.

No permitir que las planchas de las formaletas se apoyen directamente sobre las vigas longitudinales ni sobre los patines de las vigas de piso.

Asegúrense firmemente las planchas a los apoyos de las formaletas, con una longitud mínima de apoyo de 25 mm en cada extremo. Colóquense los apoyos de las formaletas en

contacto directo con el patín de las vigas de piso o las vigas longitudinales. Fíjese todo accesorio por medio de soldaduras, pernos o grampas permisibles u otros medios aprobados; sin embargo, no permitir soldar los apoyos de las formaletas a bridas o patines de acero que no sean soldables ni a partes de bridas o patines que están sujetas a esfuerzos de tensión. La soldadura y el material usado deberán llenar los requisitos de la Norma AWS D1.1 del Código de Soldadura Estructural, en lo relativo a soldadura en filete, con la excepción de que serán permitidas soldaduras en filete de 3.2 milímetros.

Todo metal de formaleta que vaya a estar permanentemente expuesto al ambiente y en el que se haya dañado la capa de galván deberá ser muy bien limpiado y cepillado con cepillo de alambre y luego, pintado con dos manos de un imprimador compuesto de oxido de zinc y polvo de zinc que cumpla con la Norma TT-P-641, Tipo II, de las Especificaciones Federales de los Estados Unidos, sin agregar colorante, a satisfacción del

Ingeniero. No retocar las pequeñas decoloraciones causadas por el calor en las áreas de soldaduras.

Localizar las juntas transversales de construcción en el fondo de una acanaladura y taládrense en el campo agujeros de drenaje de 6.4 mm, espaciados a no menos de 31 mm, entre centros a lo largo de la línea de la junta.

Cuélese el concreto de acuerdo con estas especificaciones, poniendo especial énfasis en una vibración adecuada del mismo para evitar ratoneras y vacíos, especialmente en las juntas de construcción, juntas de expansión, limahoyas y extremos de las planchas de las formaletas. Las secuencias y procedimientos del colado así como de las revolturas, deberán ser previamente aprobados.

El Ingeniero hará las inspecciones y pruebas que crea necesarias para garantizar la buena calidad y adherencia del concreto.

Proveer todas las facilidades razonablemente requeridas para que el Ingeniero pueda dirigir en forma segura y conveniente las actividades y procedimientos de inspección.

8.- Remoción de las Formaletas y la Obra Falsa.- Remuévanse todas las formaletas exceptuando las siguientes:

(a) Las formaletas interiores del fondo de las losas de calzada de vigas maestras de caja coladas en el sitio.

(b) Las formaletas para los huecos interiores de miembros prefabricados.

(c) Las formaletas para estribos o pilas cuando no se dispone de acceso permanente a las celdas o huecos.

Las formaletas que no soportan la carga muerta de los miembros de concreto y las formaletas para barandas y barreras pueden ser removidas 24 horas después de haber sido colado el concreto. Protéjanse contra daños las caras expuestos del concreto. Cúrense todas las superficies de concreto expuestas de acuerdo con el Artículo-602.16, si las formaletas son removidas menos de 7 días después de colocado el concreto.

No remover formaletas ni obra falsa sino hasta que la resistencia y el tiempo requeridos hayan alcanzado los requisitos del Cuadro 602-5.

Remuévase la cimbra para puentes de arco uniforme y gradualmente. Comenzar en la corona y seguir hacia las impostas. Remuévase la cimbra de las luces de arcos adyacentes simultáneamente.

No remover la obra falsa que soporta la losa de piso de estructuras de marco rígido excluyendo las alcantarillas de caja de concreto, sino hasta que el material de relleno haya sido colocado y compactado contra las patas verticales del marco. Instálese un sistema de apuntalamiento si la obra falsa que sostiene los lados del alma de una viga maestra con pendientes mayores de 1:1 es removida antes de colar el concreto de la losa de la calzada. Diséñese el sistema de apuntalamiento con soportes laterales que resistan todas las fuerzas rotacionales que actúan sobre el alma, incluyendo los causados por la colocación del concreto de la losa de calzada. Instálense los soportes laterales inmediatamente después de que sea removido cada panel de formaleta y antes de aflojar los soportes del panel de la formaleta adyacente.

CUADRO 602-5
Criterios Mínimos para Aflojar las Formaletas o Soportes

Elemento Estructural	Porcentaje de la Resistencia a los 28 días Especificada (f'_c)	Mínimo Número de Días desde la Últma Colada
(a) Columnas y Caras de Muros. (Que todavía no soporten cargas)	50	3
(b) Pilas y Estribos Masivos. (Que todavía no soporten cargas)	50	3
(c) Vigas Maestras de Caja.	80	14
(d) Vigas Maestras de Claro Sencillo, vigas Maestra en T, puentes de losa, vigas transversales, coronamientos, coronamientos de pilas no soportados continuamente.	80	14
(e) Losas de puentes de caballetes donde estén apoyados sobre largueros de madera.	70	10

CUADRO 602-5
Criterios Mínimos para Aflojar las Formaletas o Soportes (Continuación)

Elemento Estructural	Porcentaje de la Resistencia a los 28 días Especificada (f'_c)	Mínimo Número de Días desde la Última Colada
(f) Losas y voladizos donde estén apoyados sobre largueros de acero o vigas maestras de concreto presforzado.	70	10
(g) Coronamientos de pilas apoyadas continuamente.	60	7
(h) Arcos, puentes de claros continuos, marcos rígidos.	90	21

Remuévase todo el material de la obra falsa. Remuévanse los pilotes usados en obra falsa hasta por lo menos 0.5 metros debajo de la superficie del terreno original o lecho original del cauce.

Déjense en su lugar las formaletas para zapatas construidas dentro de una ataguía o encofrado cuando su remoción pueda poner en peligro la seguridad de la ataguía o encofrado y cuando las formaletas no van a quedar expuestas a la vista en la estructura terminada.

Remuévanse todas las demás formaletas arriba o debajo del nivel del terreno o del agua.

3.3.2.12. Sección 602.12: Manipulación y Colocación del Concreto

Efectúese todo el trabajo de excavación y rellenado estructurales de acuerdo con la Sección-207. Colóquense el acero de refuerzo, el acero estructural, los dispositivos de apoyo, el material para juntas y rubros misceláneos de conformidad con las Secciones correspondientes.

(a) Generalidades.- Manipúlese, colóquese y consolídese el concreto con métodos que no causen segregación y den como resultado un concreto denso y homogéneo que esté libre de huecos y ratoneras. Los métodos de colar el concreto no deberán causar desplazamiento del acero de refuerzo u otro material que vaya empotrado en el concreto. Cuélese y consolídese el concreto antes del fraguado inicial. No reamasar el concreto agregándole agua a la mezcla.

No colar el concreto sino hasta que las formaletas, todos los materiales que van empotrados y la adecuación del material de la fundación hayan sido inspeccionados y aprobados por el Ingeniero.

Quítese todo mortero, desechos y material extraño de las formaletas y del acero de refuerzo antes de comenzar la colocación del concreto.

Humedézcase muy bien las formaletas y la subrasante inmediatamente antes de colocar el concreto sobre ellos. Los dispositivos temporales separadores de formaletas pueden ser dejados en su sitio mientras la colocación del concreto exija su uso, después de lo cual serán removidos.

Colar el concreto continuamente sin interrupción entre la construcción planeada o entre juntas de expansión. La tasa de entrega, secuencia de la colada y los métodos deberán

ser tales que siempre se esté colando y consolidando concreto recién hecho contra concreto previamente colocado antes de que se haya alcanzado el fraguado inicial en este último. No se permitirá que el tiempo transcurrido entre la colocación de bachadas sucesivas excede de 30 minutos.

Durante y después de la colada del concreto, no se deberá dañar el concreto previamente colocado ni romper la adherencia entre el concreto y el acero de refuerzo. Manténganse a los trabajadores fuera del concreto recién hecho. No apoyar plataformas para trabajadores y equipo directamente sobre el acero de refuerzo. Una vez que el concreto ha fraguado, no perturbar las formaletas o las varillas de refuerzo que sobresalgan del concreto sino hasta que éste alcance la resistencia suficiente para evitar daños.

(b) Secuencia de la Colada.

(1) Subestructuras.- No colocar cargas sobre caballetes, pilas o estribos terminados sino hasta que los ensayes de los cilindros tomados del mismo concreto y curados bajo las mismas condiciones que el elemento de la subestructura, indican que todo el concreto tiene, por lo menos, el 80 por ciento de su resistencia a la compresión requerida a los 28 días.

(2) Miembros Verticales.- Para los miembros verticales de más de 5 metros de altura, permítase que el concreto fragüe por lo menos 4 horas antes de colar concreto para los miembros horizontales que los integran. Para miembros verticales de más de 5 metros de altura, déjese que el concreto fragüe por lo menos 30 minutos. No aplicar las cargas de los miembros horizontales sino hasta que el miembro vertical haya alcanzado su resistencia requerida.

(3) Superestructuras.- No colar concreto en la superestructura sino hasta que las formaletas hayan sido suficientemente descubiertas para determinar la aceptabilidad del concreto de la subestructura que la soporta. No colar concreto en la superestructura sino hasta que la subestructura haya alcanzado la resistencia requerida.

(4) Arcos.- Colar el concreto en los anillos del arco de tal manera que la cimbra sea cargada uniforme y simétricamente.

(c) Métodos de Colado.- Usar equipo de suficiente capacidad que sea diseñado y operado para evitar la segregación de la mezcla y pérdida de mortero. No usar equipo que produzca vibraciones que puedan causar daños al concreto recién colado. No usar equipo con partes de aluminio que entren en contracto con el concreto. Remover el mortero fraguado o secado de las superficies internas del equipo de colar concreto.

Colóquese el concreto lo más cerca posible a su posición final. No colar concreto en capas horizontales de más de 0.5 metros de espesor. No exceder la capacidad del vibrador para consolidar y fundir la nueva capa con la capa previa. No colocar el concreto a una tasa tal que, al ser corregido por temperatura, exceda la carga de diseño de las formaletas.

No dejar caer concreto no confinado más de 2 metros. El concreto podrá ser confinado usando un tubo equipado con una cabeza de tolva u otro dispositivo aprobado que evite la segregación de la mezcla y la salpicadura del mortero. Esto no se aplica a la hincadura de pilotes colados en el sitio cuando la colocación del concreto es completada antes de que alcance el fraguado inicial del concreto colado primero.

Operar las bombas de concreto en forma tal que se entregue en el tubo de descarga una corriente continua de concreto sin bolsas de aire. No usar sistemas de bandas transportadoras de más de 170 metros de largo medidos de extremo a extremo del conjunto total de la banda. Arréglese el conjunto de la banda de manera que cada sección descargue por medio de una tolva vertical en la siguiente sección sin que el mortero se adhiera a la banda. Úsense una tolva, una canaleta y deflectores en el extremo de descarga del sistema de banda transportadora a fin de hacer que el concreto caiga verticalmente.

(d) Consolidación.- Provéanse suficientes vibradores manuales de tipo interno, adecuados para las condiciones de la colada de concreto.

Los vibradores deberán cumplir con los requisitos indicados en el Cuadro 602-6. Provéanse vibradores recubiertos de hule cuando se use acero de refuerzo recubierto con epóxico.

CUADRO 602-6
Requisitos para Vibradores Manuales

Diámetro de la Cabeza (mm)	Frecuencia (Vibraciones/minutos)	Radio de Acción (mm)
19 a 38	10,000 a 15,000	75 a 125
32 a 64	9,000 a 13,500	125 a 255
50 a 89	8,000 a 12,000	180 a 485

Provéase un número suficiente de vibradores para consolidar cada bachada a medida que se va colocando. Provéase un vibrador de repuesto en el sitio para casos de desperfectos. Usar vibradores externos de formaleta solamente cuando las formaletas hayan sido diseñadas para ser vibradas externamente y cuando no sea posible la vibración interna.

Consolidar todo el concreto por vibración mecánica inmediatamente después de ser colocado. Manipúlense los vibradores para conseguir que el concreto penetre completamente alrededor del acero de refuerzo, accesorios empotrados, esquinas y ángulos de las formaletas. No causar segregación. No consolidar el concreto colocado bajo agua. Suplementar la vibración con el varillado, según fuere necesario, para garantizar superficies lisas y concreto denso a lo largo de la superficie de las formaletas, en las esquinas y lugares imposibles de alcanzar con los vibradores.

Vibrar el concreto en el punto en que fue depositado y en puntos uniformemente espaciados no separados más de 1.5 veces el radio dentro del cual la vibración es visiblemente efectiva. Insertar los vibradores de manera que las áreas vibradas afectadas se traslapen. No usar los vibradores para desplazar el concreto. Insertar los vibradores verticalmente y sacarlos lentamente del concreto. La vibración deberá ser de suficiente duración e intensidad para consolidar completamente el concreto, pero sin causar segregación. No vibrar en ningún punto tanto tiempo que se formen área localizadas de lechada. No vibrar el acero de refuerzo. No vibrar áreas ya vibradas.

3.3.2.13. Sección 602.13: Juntas de Construcción

Constrúyanse juntas de construcción en los lugares mostrados en los planos. Para juntas de construcción adicionales se requerirá aprobación escrita.

En las juntas de construcción horizontales, colóquense bandas calibradas dentro de las formaletas a lo largo de todas las caras expuestas, para producir líneas de junta rectas. Límpiense y satúrense las juntas de construcción antes de colocar mezcla de concreto. Manténganse las juntas saturadas hasta que el concreto adyacente haya sido colocado. Inmediatamente antes de colocar nuevo concreto apriétense las formaletas firmemente contra el concreto previamente colocado. Donde sea accesible, úntese completamente la superficie existente con una mano muy delgada de mortero de cemento. Extiéndanse las varillas de acero de refuerzo a través de las juntas de construcción.

3.3.2.14. Sección 602.14: Juntas de Expansión y de Contracción

(a) Juntas Abiertas.- Fórmense las juntas abiertas con una faja de madera, plancha metálica u otro material aprobado. Quítese el material usado para moldear las juntas, sin cascar o quebrar las esquinas del concreto. No extender el acero de refuerzo a través de las juntas abiertas.

(b) Juntas Rellenadas.- Recórtese el rellenador premoldeado de juntas de expansión hasta darle la forma y tamaño de la superficie que se va a juntar. Asegúrese el rellenador de juntas en una de las superficies de la junta usando clavos galvanizados u otros medios aceptables. Traslápese siguiendo las recomendaciones del Fabricante. Después de quitar las formaletas remuévase y recórtese nítidamente todo el concreto o mortero que haya sellado a través de la junta. Rellénense todos los espacios vacíos que hayan quedado en la junta, de 3 mm ó más de ancho, con asfalto caliente u otro rellenador aprobado. Colóquense todos los espárragos de conexión, los dispositivos de transferencia de carga y otros dispositivos tal como están mostrados en los planos o lo ordene el Ingeniero.

(c) Juntas de Acero.- Fabríquense las planchas, angulares y otros perfiles estructurales exactamente para que se ajusten a la superficie de concreto. Déjese la abertura de la junta de tal tamaño que se acomode a la colada del concreto. Fijénse firmemente los materiales de la juntas para mantenerlos en su posición correcta. Manténgase la abertura de la junta libre de obstrucciones durante la colada del concreto.

(d) Tapajuntas.- Constrúyanse los tapajuntas de acuerdo con la Sección-908 de estas especificacinones.

(e) Sellos de Juntas de Compresión.- Úsense sellos de juntas de compresión de una sola pieza en las juntas transversales y los más largos posible, en las juntas longitudinales. Límpiense y séquense las juntas y quítense todas las astilladuras e irregularidades. Aplíquese un adhesivo lubricante como una película cobertora a ambos lados del sello inmediatamente de la instalación. Comprímase el sello y colóquese en la junta de acuerdo con lo recomendado por el Fabricante. Asegurarse de que el sello está en pleno contracto con las paredes de la junta en toda su longitud.

Quítense y descártense todos los sellos que estén torcidos, encolochados, mellados o inadecuadamente moldeados. Quítense y reponganse los sellos de juntas que se alarguen más del 5 por ciento de su longitud original al ser comprimidos. Quítese todo el exceso de adhesivo lubricante antes de que se seque.

(f) Sellos Elastoméricos para Juntas de Expansión.- Instalar la junta de acuerdo con las recomendaciones del Fabricante y lo indicado en los planos.

3.3.2.15. Sección 602.15: Acabado del Concreto Plástico

Allánense todas las superficies de concreto que no hayan sido coladas en contacto con formaletas.

Acabar con llana de madera la superficie del concreto. Elimínese toda lechosidad o lechada delgada. Piquetéense cuidadosamente todos los bordes no ochavados con un canteador. Déjense expuestos los bordes del rellenador de juntas. Protéjase la superficie de los daños de la lluvia.

Acábanse todas las superficies de concreto a ser usadas por el tráfico dandoles una textura resistente al deslizamiento. Provéanse, por lo menos, 2 puentes o pasarelas de trabajos adecuados y convenientes.

(a) Enrase y Allanamiento.- Para pisos de puentes y losas superiores de estructuras que van a servir como pavimentos acabados, úsese una máquina terminadora autopropulsada aprobada equipada con enrasador oscilatorio. Si se aprueba, úsense métodos de acabado manual en áreas irregulares donde el uso de una máquina sea impráctico.

Envásense todas las superficies usando equipo aprobado sobre rieles o largueros sobre los cuales se desplace. No apoyar los rieles dentro de los límites de colocación del concreto, sin aprobación.

Fíjense los rieles o largueros sobre apoyos que no cedan de manera que el equipo de acabado opere sin interrupciones sobre toda la superficie que está siendo acabada. Extiéndanse los rieles más allá de ambos extremos del tramo programado para la colada, una distancia suficiente para permitir a la máquina terminadora darle acabado al concreto que se está colocando.

Colóquense los rieles sobre toda la longitud de superestructuras de vigas maestras de acero.

Ajústense los rieles, largueros y el equipo de enrasar de acuerdo con el perfil y sección transversal requeridos, tomando en cuenta el asentamiento previsto, la contraflecha y la deflexión de la obra falsa.

Antes de iniciar la entrega y colado del concreto, opérese la máquina enrasadora sobre todo el área a ser acabada para comprobar si hay deflexiones excesivas de los rieles, el espesor de la losa superior, el recubrimiento del acero de refuerzo y verificar la adecuada operación del equipo. Háganse las correcciones necesarias antes de que comience la colocación del concreto.

Después de colocado el concreto, opérese la máquina enrasadora sobre el concreto lo que sea necesario para obtener el perfil y sección transversal requeridos. Manténgase un pequeño colocho de concreto excedente al frente de la cuchilla cortadora del enrasador todo el tiempo.

Manténgase este exceso de concreto hasta el final de la colada o de la formaleta y luego remuévase y deséchese. Ajústense los rieles o largueros lo necesario para corregir asentamientos o deflexiones no previstas.

Quítese todo el exceso de agua, lechosidad o material extraño llevado a la superficie, por medio de una rastra de hule o codal arrastrado desde el centro de la losa hacia cada orilla. No aplicar agua a la superficie del concreto durante las operaciones de acabado.

(b) Escantillón.- Compruébense las superficies de la losa y la acera. Compruébese la superficie entera paralelamente a la línea central del puente con un escantillón metálico de 3 metros de largo. Traslápese el escantillón por lo menos la mitad de la longitud de la pasada anterior de dicho escantillón.

Corríjanse las desviaciones en exceso de 3 mm desde el borde del escantillón usado en la prueba. Para superficies del piso del puente que vayan a recibir una carpeta, corríjanse las desviaciones en exceso de 6 milímetros.

(c) Texturación.- Prodúzcase una textura de la superficie que sea resistente al deslizamiento en todas las superficies destinadas a la circulación mediante ranuración. Úsese uno de los siguientes acabados o una combinación de ellos, para otras superficies según se requiera.

(1) Acabado Ranurado.- Úsese una allanadora de madera que tenga una fila simple de rebabas o aletillas o una máquina aprobada diseñada específicamente para aserrar ranuras en pavimentos de concreto. Espaciar las rebabas o aletillas de 10 a 20 mm de centro a centro. Háganse las ranuras de 2 a 5 mm de ancho y de 3 a 5 mm de profundidad. Ranúrese

perpendicularmente a la línea central sin rasgar la superficie de concreto o soltar el agregado de la superficie.

Si las ranuras son aserradas, córtense aproximadamente de 5 mm de ancho espaciadas de 15 a 25 milímetros.

En las calzadas de puentes, descontinúese la ranuración a 300 mm de la cara del bordillo y dese un acabado longitudinal con llana metálica en la superficie de las cunetas.

(2) Acabado de las Aceras.- Enrásese la superficie usando una tabla de enrasar y luego trabájese con llana de madera la superficie. Úsese una herramienta de cantear en los bordes y juntas de expansión. Cepíllese la superficie usando un cepillo con cerdas tiesas. Cepíllese perpendicularmente a la línea central de orilla a orilla traslapando ligeramente las corridas adyacentes. Produzcanse corrugaciones regulares de no más de 3 mm de profundidad sin rasgar el concreto. Mientras el concreto está plástico, corríjanse lugares porosos, irregularidades, depresiones, pequeñas cavidades y sitios ásperos.

Ranúrense las juntas de contracción al intervalo requerido usando una herramienta de ranurar aprobada.

(3) Acabado con Llana Metálica y Cepillo.- Úsese una llana de acero para producir superficie lisa y resbaladiza, libre de sangrado de agua. Cepíllese la superficie usando un cepillo fino y corridas paralelas.

(4) Acabado de Agregado Expuesto.- Enrásese la superficie usando una tabla de enrasar y luego úsese una llana de madera.

Úsese una herramienta de cantear en todas las juntas transversales y longitudinales que están contra formaletas o pavimento existente.

No cantear las juntas transversales en una colada continua de un carril en juntas longitudinales en la colada continua de un carril doble.

Tan pronto como el concreto se endurece lo suficiente para evitar que las partículas de agregado sean desprendidas, cepíllese la superficie. Úsense cepillos tiesos aprobados por el Ingeniero. Téngase cuidado de no estropear la superficie o de agrietar o descantillar los bordes de la losa o de las juntas. Si lo aprueba el Ingeniero, aplíquese un rocío ligero de retardador de fraguado a la superficie no acabada para facilitar el trabajo.

Primero, cepíllese transversalmente a través del pavimento. Quítese enteramente el mortero semi-duro aflojado del pavimento. Quítese el mortero de todos los pavimentos adyacentes. Luego, cepíllese paralelamente a la línea central del pavimento. Continúese esta operación hasta que una cantidad suficiente de agregado grueso haya quedado expuesta. Otros métodos de exponer el agregado, tales como el uso de un aditamento de rociar agua sobre un cepillo especial para exponer agregados, serán permitidos si se demuestran buenos resultados.

Después de curar el concreto de acuerdo con el Artículo-501-17, lávese la superficie con cepillos y agua para quitar toda lechosidad y cemento del agregado grueso expuesto.

(d) Superficies debajo de Apoyos.- Dese acabado a todas las superficies de apoyo dentro de 5 mm de la elevación indicada en los planos. Cuando se vaya a colocar una plancha de mampostería directamente sobre el concreto o sobre material rellenador de menos de 5 mm de espesor, acábese la superficie con llana de madera a una elevación ligeramente arriba de la elevación indicada en los planos. Después de que el concreto ha fraguado, esmerílese la superficie lo necesario para proveer un apoyo completo y parejo.

Cuando se vaya a colocar una plancha de mampostería sobre material rellenador de 5 a 15 mm de espesor, dese acabado a la superficie con llana de acero. Acábese y esmerílese la superficie de manera que no varíe con respecto a un escantillón, en cualquier dirección, en más de 2 milímetros.

Cuando se vaya a colocar una plancha de mampostería sobre material rellenador de más de 15 mm de espesor o cuando se vayan a usar almohadillas elastoméricas de apoyo, acábese la superficie hasta obtener una superficie plana libre de crestas.

Cuando sea requerido debajo de una plancha de mampostería o almohadilla elastomérica de apoyo, úsese mortero en las proporciones de 1 parte de cemento Portland y 1.5 partes de arena limpia. Mézclense bien la arena y el cemento antes de agregar el agua. Mézclese mortero solamente en la cantidad suficiente para uso inmediato. Descártese todo mortero que haya sido revuelto más de 45 minutos antes. No reamasar el mortero.

Cúrese el mortero ya colocado durante, por lo menos, 48 horas. La arena para mortero se ajustará a lo requerido en la norma AASHTO M 45. Se podrán usar productos especiales patentados, con la aprobación del Ingeniero.

(e) Superficie Debajo de Sello de Calzada Hermetizado al Agua con Membrana.- Las superficies que van a ser cubiertas con sello de calzado hermetizadoras al agua con membrana, no deberán ser de textura áspera, sino que serán acabadas dejando superficies lisas y libres de crestas y otras protuberancias.

3.3.2.16. Sección 602.14: Curación del Concreto

Comenzar la curación inmediatamente después de que el agua libre superficial se ha evaporado y se ha completado el acabado. Si la superficie del concreto comienza a secarse antes de que se haya escogido el método de curación que se va a implementar, manténgase la superficie de concreto húmeda usando un rocío como niebla sin dañar la superficie.

Las superficies a ser frotadas deberán ser mantenidas húmedas después de quitar las formaletas. Cúrense inmediatamente después de la primera frotada.

Cúrense las superficies superiores de las calzadas de puentes usando el método de compuesto de membrana líquida para curar combinado con el método a base de agua. Aplíquese el compuesto de membrana líquida inmediatamente después del acabado. Aplíquese la curación a base d agua dentro de 4 horas después del acabado.

Cúrese todo el concreto ininterrumpidamente por lo menos durante 7 días. Si en la mezcla se ha usado puzolana en exceso del 10 por ciento en peso del cemento, cúrese ininterrumpidamente por lo menos durante 10 días. **(a) Método con las Formaletas en su Lugar.-** Para superficies coladas con formaletas, déjense éstas en su lugar sin aflojarlas. Si las formaletas son quitadas durante el período de curación para facilitar la frotación, quítense únicamente las formaletas de las áreas que puedan ser frotadas durante el mismo turno de trabajo. Durante la frotación, manténgase húmeda la superficie de concreto expuesta. Después de completar la frotación, continúese el proceso de curación usando el método de aplicación de agua o un compuesto para curar que sea claro (tipo 1 ó tipo 1-D) por el período de curación restante.

(b) Método a Base de Agua.- Manténgase la superficie de concreto continuamente húmeda mediante agua empozada, rociada o cubriendo con un material que es mantenido constante y completamente húmedo. El material de cobertura puede consistir en esterillas de algodón, capas múltiples de tela de bramante u otro material aprobado que no decolore o dañe de cualquier otra manera al concreto.

Cúbrase el material de cobertura con un material laminado hermético al agua que impida la pérdida de humedad del concreto. Úsense láminas que sean lo más anchas posible. Traslápense las láminas adyacentes por lo menos 150 mm y séllense herméticamente todas las costuras con cinta sensible a la presión, mástique, goma u otros métodos aprobados. Fíjese bien todo el material de manera que no lo desplace el viento. Repárense inmediatamente las láminas que hayan resultado quebradas o dañadas.

(c) Método Curación con Compuesto de Membrana Líquida.- No usar el método de membrana líquida sobre superficies que van a recibir un acabado por frotación. Su uso en superficies de juntas de construcción será permitido solamente si el compuesto va a ser removido con chorro de arena antes de colocar el concreto contra la junta.

Úsese compuesto de membrana líquida del tipo 2, de pigmento blanco, solamente en las superficies de la calzada de puentes o sobre superficies que no van a quedar expuestas a la vista en la obra terminada. En las demás superficies úsese compuesto de curación del tipo 1 o del tipo 1-D, claro.

Mézclense las soluciones para curar por membrana que contengan pigmentos, antes de usarlas. Continúese agitándolas durante la aplicación.

Úsese equipo capaz de producir un rocío fino. Aplíquese el compuesto a una tasa mínima de 0.25 litros por metro cuadrado en una o dos aplicaciones uniformes. Si la solución es aplicada en dos pasadas, sígase la primera aplicación con la segunda dentro de 30 minutos y aplicándola en ángulo recto con respecto a la primera.

Si se daña la membrana por lluvia u otras causas durante el período de curación, inmediatamente aplíquese otra mano sobre el área dañada.

3.3.2.17. Sección 602.17: Acabado de Superficies de Concreto Coladas en Formaletas

Elimínese o reemplácese o repárese, según lo apruebe el Ingeniero, todo concreto con huecos de roca o "ratoneras". Désele el acabado a las superficies de concreto sano colado mediante formaletas, de acuerdo con lo siguiente:

(a) Clase 1 - Acabado Ordinario.- Désele acabado ordinario, clase 1, a las superficies siguientes:

(1) Superficies debajo de claros de losas, vigas maestras de caja (doble alma), claros de arcos de enjuta rellenada y las losas de calzada de la vía entre vigas maestras de la superestructura.

(2) La cara interna de las superficies verticales de vigas maestras en T de superestructuras.

(3) Superficies que van a quedar enterradas y superficies de alcantarillas de caja que quedan por encima del terreno acabado que no sean visible desde la vía de circulación o de una vía peatonal.

Comenzar el acabado tan pronto como sean quitadas las formaletas. Elimínense aletas y protuberancias irregulares de todas las superficies que quedan expuestas o van a ser impermeabilizadas. Elimínense las abombaduras y rebajaduras con piedras o discos de carborundum.

Elimínese concreto localizado con huecos de rocas o ratoneras que no hayan sido bien reparados y reemplácese con concreto sano o mortero empacado de una manera aprobada. Límpiense y sanéense todas las cavidades dejadas por los tirantes de las formaletas, agujeros, concreto quebrado, filos y otros defectos. Satúrese el área con agua. Dese el acabado al área con mortero que tenga menos de una hora de mezclado.

Después de que el mortero haya fraguado, frótese (si fuera necesario) y continúese la curación. Déjense las áreas expuestas comparables al concreto que las rodea.

Piquetéese cuidadosamente y quítese el mortero y concreto libres de las juntas de construcción y de expansión. Déjese el rellenador de juntas expuesto en toda su longitud con bordes limpios y bien alineados.

Frótense o esmerílense las superficies de apoyo de pilas y estribos a la elevación y pendiente especificadas.

Si la superficie acabada final no está exacta y uniforme, frótesela de acuerdo con lo indicado en (b) más adelante.

(b) Acabado Clase 2 - Por frotación.- Dese acabado de clase 2, por frotación, a las siguientes superficies:

(1) Todas las superficies de las superestructuras de puentes, excepto aquellas que estén designadas para recibir acabado de clase 1 u otro acabado.

(2) Todas las superficies de pilas, pilotes, columnas y estribos de puentes y muros de retención por encima del nivel del terreno acabado y a, por lo menos, 300 mm por debajo del terreno no acabado.

(3) Todas las superficies del anillo de arcos de enjuta abierta columnas de enjutas y torres de estribos.

(4) Todas las superficies de cruces peatonales bajo nivel, excepto los pisos y superficies que quedan cubiertos con tierra.

(5) Las superficies que quedan arriba del terreno acabado de cabezales de alcantarillas que sean visibles desde la vía de circulación o de cruces peatonales.

(6) Las superficies internas de cajas-alcantarillas de más de 7 metro de altura que sean visibles desde la vía de circulación.

Dese el acabado en una distancia del interior de la caja por lo menos igual a la altura de la misma.

(7) Todas las superficies de las barandas de los puentes.

Complétese el acabado de clase 1 de acuerdo con lo indicado en el inciso (a) precedente. Satúrese la superficie de concreto con agua. Frótese la superficie con piedra de carborundum de aspereza medio gruesa usando una pequeña cantidad de mortero sobre la superficie. Úsese mortero compuesto de cemento y arena fina mezclados en la misma proporción que en el concreto que está siendo acabado. Continúese frotando hasta que desaparezcan las marcas de las formaletas, las protuberancias e irregularidades y se haya obtenido una superficie uniforme. Déjese en su lugar la pasta producida por la frotación.

Después de que otros trabajos que pudieran afectar la superficie hayan sido concluidos, frótese con una piedra de carboundum fino y agua hasta que toda la superficie tenga una textura lisa y de color uniforme. Después de que haya secado la superficie, frótesela con tela de bramante para quitar el polvo suelto. Déjesela libre de parches no sanados, pasta, polvo y marcas objetables.

(c) Acabado Clase 3 - Con Herramientas.- Déjese al concreto fraguar por lo menos 14 días o más si fuera necesario para evitar que las partículas de agregado sean arrancadas de la superficie. Úsense herramientas a aire comprimido tales como martellina, piqueta y otras aprobadas.

Descascárese el mortero de la superficie y quiébrense las partículas de agregado para exponer agrupaciones de partículas de agregado quebrado en un patrón de mortero.

(d) Acabado Clase 4 - Acabado a Chorro de Arena.- Déjese al concreto fraguar por lo menos 14 días. Protéjanse las superficies adyacentes que no vayan a ser acabadas de esta manera. Aplíquese el chorro de arena a presión con arena aguda y dura para producir una superficie de grano fino pareja de la cual es desprendido el mortero dejando expuesto el agregado.

(e) Acabado Clase 5 - Con Cepillo de Alambre o Lavador.- Comiéncese tan pronto como sean quitadas las formaletas. Lávese la superficie con cepillos de alambre tieso o de fibra dura usando una solución de ácido muriático. Mézclese la solución en la proporción de una parte de ácido a 4 partes de agua. Lávese restregando hasta que la película o superficie de cemento sea completamente removida y que las partículas de agregado queden expuestas. Déjese una textura apedregullada uniforme que tenga la apariencia de granito fino a conglomerado grueso, dependiendo del tamaño y graduación del agregado. Lávese toda la superficie con agua que contenga una pequeña cantidad de amoníaco.

(f) Acabado Clase 6- A Color.- Constrúyase un número suficiente de paneles de muestra de 0.5 por 1 metro de concreto a color, hasta obtener un color aceptado por el Ingeniero. Protéjase el panel de muestra a color aprobado todo el tiempo que dure el trabajo.

Colóreense todas las superficies designadas de acuerdo con el color del panel aceptado.

Complétese un acabado de clase 1 de acuerdo con lo estipulado en el inciso (a) precedente. No aplicar el acabado a color hasta que se haya completado la colada de concreto para toda la estructura. Quítese todo el polvo, material extraño, aceite de formaleta, grasa y compuesto de curar, con una solución al 5 por ciento de fosfato trisódico y luego lávese el concreto con agua limpia.

Úsese papel, tela u otros medios para proteger las superficies que no vayan a ser acabadas a color. Aplíquese el acabado a una superficie de concreto seca a la temperatura ambiental.

Aplíquese el acabado a calor de acuerdo con las recomendaciones del Fabricante. Úsese un rociador, brocha o rodillo de pintar para aplicar la primera mano de sellador penetrante o base de color. La mano de color será aplicada de la misma manera después de que la primera mano haya secado completamente. Aplíquese el acabado a las superficies de manera que se obtenga un color uniforme y permanente, libre de huellas y corridas.

Límpiense las áreas de concreto que no estén designadas para recibir esta clase de acabado, usando un método aprobado.

3.3.2.18. Sección 602.19: Cargas sobre Estructuras Nuevas de Concreto

No colocar ningún tipo de cargas sobre pilas de caballete o estribos acabados hasta que los ensayes de los cilindros moldeados del mismo concreto y curados bajo las mismas condiciones que el elemento de la subestructura, indiquen que el concreto ha alcanzado por lo menos el 80 por ciento de la mínima resistencia a la compresión a los 28 días especificada. Esta restricción no se aplica a las coladas de las capas superiores de los elementos de la subestructura coladas por etapas.

No permitir que vehículos o equipo de construcción circulen sobre un claro cualquiera hasta que el concreto de toda la superestructura haya alcanzado su resistencia de diseño a la compresión y haya sido construida por lo menos hace 21 días.

3.3.2.19. Sección 602.20: Aceptación

Los materiales para el concreto serán evaluados visualmente y mediante mediciones y ensayes Artículo-106.12.

Suministrar un certificado de producción para el cemento Portland.

El revenimiento, contenido de aire, peso unitario de masa y la temperatura de la mezcla de concreto serán evaluados visualmente y mediante mediciones y ensayes Artículo-106.12. Ver en el Cuadro 602-9 los requisitos mínimos para el muestreo y ensaye.

La resistencia a la compresión del concreto será evaluada estadísticamente Artículo-106.12. El Cuadro 602-9 da los requisitos mínimos para muestreo y ensaye. El límite inferior de la especificación es el mínimo requerido de la resistencia a la compresión a los 28 días (f'_c) especificado en el Contrato. Un resultado sencillo de ensaye a la compresión es el resultado promedio de 2 cilindros moldeados de la misma carga y ensayados a los 28 días. Ver en el Cuadro 602-9 la categoría de aceptación de las características de calidad.

Remuévase y reemplácese el concreto representado por cilindros que tengan una resistencia a la compresión de menos del 90 por ciento de la mínima resistencia a la

compresión a los 28 días (f'c) y localizado de tal manera que cause efectos intolerablemente perjudiciales en la estructura.

La construcción (incluyendo la dosificación, la colocación, el acabado y la curación del concreto) será evaluada visualmente y mediante mediciones y ensayes Artículo-106.12.

La obra falsa y las formaletas (incluyendo el diseño, la construcción y la remoción) serán evaluadas visualmente, por certificaciones y mediante mediciones y ensayes Artículo-106.12.

Cuando la instalación de la obra falsa esté completa y antes de comenzar a colar o remover el concreto, hágase inspeccionar la obra falsa por un ingeniero estructural calificado con experiencia en este ramo. Certificar por escrito que la instalación cumpla con los requerimientos de las especificaciones y el Contrato, los planos de la obra falsa aprobados (incluyendo los cambios aprobados) y las prácticas de ingeniería aceptables.

Proveer una copia de la certificación antes de iniciar a colar el concreto.

3.3.2.20. Sección 602.21: Método de Medición

La medición del concreto estructural y el concreto para sellar, será hecha en metros cúbicos en la estructura terminada. La cantidad a ser pagada será la mostrada en el Pliego de Licitación, a menos que se hayan hecho cambios en el diseño que afecten a dicha cantidad, en cuyo caso la cantidad que aparece en el Pliego de Licitación, para los fines de pago, será ajustada en la cantidad afectada por el cambio. No se harán deducciones por el volumen ocupado por tubos con diámetro de 200 mm ó menos ni por el acero de refuerzo, anclajes, conductos, drenes de alivio o pilotes.

Ni las formaletas ni la obra falsa serán medidas con fines de pago.

Tampoco serán medidos con fines de pago los aditivos de cualquier tipo incorporados en la mezcla.

3.3.2.21. Sección 602.22: Base para el Pago

Las cantidades aceptadas, medidas de acuerdo con lo estipulado en el artículo precedente, serán pagadas al precio de contrato por unidad de medida para los conceptos de pago listados más adelante que figuren en el Pliego de Licitación, excepto que el precio de contrato del concreto estructural será ajustado estadísticamente Artículo-106.12. El pago será compensación total por el trabajo prescrito en esta Sección.

Ver Artículos-106.03 y Artículo-110.4.

El pago será hecho de acuerdo con los siguientes conceptos:

CUADRO 602-9
Muestreo y Ensayes

Material o Producto	Propiedad o Característica	Categoria	Método de Ensaye o Especificaciones	Frecuencia	Lugar del Muestreo
Concreto	Revenimiento	----	AASHTO T 119	1 por carga (2)	Chorro de descarga en el lugar de colocación
	Contenido de aire	----	AASHTO T 152 ó AASHTO T 196	1 por carga (2)	Chorro de descarga en el lugar de colocación
	Pesos Unitario	----	AASHTO T 121	1 por carga (2)	Chorro de descarga en el lugar de colocación
	Temperatura	----	Termómetro	Carga Final	Chorro de descarga en el lugar de colocación
	Hechura de Especimenes de Ensaye	----	AASHTO T 23	1 Juego por cada 25 m^3 pero	Chorro de descarga en el lugar de
	Resistencia a la Compresión (1)	II	AASHTO T 22	No menos de 1 juego por dia.	colocación

(1) Muestrear de acuerdo con AASHTO T 141 excepto que no se requiere muestras combinadas.
(2) Verificar el cumplimiento con la especificación antes y durante cada operación de colado.
(3) Moldear, por lo menos, 4 cilindros para ensayes de resistencia a la compresión y trasladarlos con sumo cuidado al sitio de la obra donde están las facilidades para curación de cilindros.
(4) Un resultado sencillo de ensaye a la compresión es el resultado promedio de 2 cilindros moldeados de la misma carga y ensayados a los 28 días.

3.3.3. SECCIÓN 604: ACERO DE REFUERZO

3.3.3.1. Sección 604.01: Descripción

Este trabajo consistirá en el suministro y colocación de acero de refuerzo de acuerdo con estas especificaciones y en conformidad sustancial con los planos.

3.3.3.2. Sección 604.02: Materiales

El acero de refuerzo llenará los requisitos del Artículo-1009.01.

3.3.3.3. Sección 604.03: Lista de Pedidos del Material

Antes de ordenar material, el Contratista someterá a la aprobación del Ingeniero todas las listas de la orden y diagramas de dobladura y no podrá ordenar tales materiales mientras el Ingeniero no haya aprobado las listas y diagramas citados; sin embargo, la aprobación de éstas, en modo alguno relevará al Contratista de su responsabilidad por su exactitud. Los

cambios en los materiales suministrados de acuerdo con dichas listas y diagramas, con el objeto de cumplir con lo requerido en los dibujos de diseño, serán por cuenta del Contratista.

3.3.3.4. Sección 604.04: Protección de los Materiales

(a) Varios.- El acero de refuerzo deberá ser protegido constantemente contra daños resultantes de su almacenaje sobre bloques, rejillas o plataformas. Antes de colar el concreto, el acero de refuerzo que va a quedar embebido en el concreto deberá estar libre de costras de sarro, tierra, lodo, escamas sueltas, pintura, aceite y de toda otra sustancia extraña.

(b) Acero de Refuerzo Recubierto con Epóxico.- Las varillas recubiertas deberán ser soportadas sobre áreas de contacto acolchonadas. Se deberán acolchonar todas las bandas en paquete. Para el izaje se usará un respaldo fuerte con soportes múltiples o un puente de plataforma. Evites el desgaste de varilla contra varilla. No se deberá dejar caer o arrastrar los paquetes de varillas.

Antes de su colocación, se deberá inspeccionar las varillas recubiertas para ver si no está´dañado el recubrimiento. Se parchará todos los defectos en el recubrimiento visibles al ojo desnudo por medio de un material adecuado para parcheo y reparación de acuerdo con AASHTO M 284 M. Se limpiarán las áreas que serán parchadas removiendo todos los contaminantes superficiales y recubrimiento dañado. El área a ser parchada deberá ser raspada antes de aplicar el material de parchar. Cuando haya sarro, quítese por medio de chorro de arena o herramienta a motor limpiando inmediatamente antes de aplicar el material de parchar.

Con toda prontitud, trátese la varilla de acuerdo con las recomendaciones del Fabricante de la resina y antes de que ocurra una oxidación perjudicial. El material de parchar deberá ser traslapado con la cobertura original en 50 mm o lo que recomiende el Fabricante. Provéase una película seca de no menos de 200 micrones de espesor sobre las áreas parchadas.

Se deberán tomar las medidas necesarias para minimizar los daños al recubrimiento epóxico de las varillas instaladas. Todo daño en el recubrimiento observado posteriormente a la instalación será limpiado y parchado según se describió anteriormente.

No serán permitidos las reparaciones de campo en varillas cuyo recubrimiento haya sido seriamente dañado; tales varillas deberán ser reemplazadas. Se dice que un recubrimiento está seriamente dañado cuando el recubrimiento con un área total dañada en cualquier longitud de 50 cm de varilla, excede al 5% del área superficial de esa porción de la varilla. Se recubrirán los empalmes mecánicos después de la instalación de los empalmes de acuerdo con AASHTO M 284 M para el parcheo de recubrimientos epóxicos dañados.

3.3.3.5. Sección 604.05: Dobladura

Todas las varillas de refuerzo que deban ser dobladas, serán dobladas en frío y de acuerdo con los procedimientos recomendados por el CRSI, a menos que los planos y especificaciones lo indicaran de otra manera. Las varillas que vayan a quedar parcialmente embebidas en el concreto no serán dobladas, a menos que lo indiquen los planos o lo autorice el Ingeniero. El corte y dobladura serán encargados a armadores calificados provistos de las herramientas adecuadas para tales trabajos.

3.3.3.6. Sección 604.06: Colocación y Amarre

En losas de puentes y viaductos el acero de refuerzo será amarrado en intersecciones alternas, a menos que con este sistema los amarres queden espaciados a más de 30 centímetros, en cuyo caso, se amarrarán todas las intersecciones. Los dispositivos de apoyo para el acero de refuerzo no quedarán espaciados a más de 1.20 metros, transversal o longitudinalmente. La colocación del acero de refuerzo en calzadas no se apartará más de + 6.35 mm en dirección vertical, de la posición mostrada en los planos. No se podrá colar el concreto en ningún miembro de la estructura hasta que la colocación del refuerzo haya sido aprobada. Con este objeto, el Contratista notificará al Ingeniero, con no menos de 48 horas de anticipación, o más si el tamaño de la estructura fuera muy grande, al inicio propuesto de las operaciones de colado, cuando la armadura esté lista para inspección.

No serán permitidos los traslapes a menos que estén mostrados en los planos o los autorice el Ingeniero. Las longitudes de los traslapes serán las indicadas en los planos o en las Especificaciones Especiales.

No se permitirá soldar el acero de refuerzo, a menos que así lo muestren los planos o lo autorice el Ingeniero. Toda soldadura llenará los requisitos de las “Especificaciones Estándar para Puentes de Carreteras” de la AASHTO.

No se usarán soportes de metal que se extiendan hasta la superficie. No será permitida la colocación de varillas en capas de concreto recién colado ni el ajuste de varillas mientras progresan las operaciones de colado.

Las varillas principales del refuerzo, que soportan determinados esfuerzos, serán traslapadas únicamente donde lo muestren los planos o dibujos de taller aprobados.

El mínimo espaciamiento de varillas paralelas de centro a centro, será 2.5 veces el diámetro de dichas varillas, pero en ningún caso la distancia libre entre varillas podrá ser menor de 2.5 veces el tamaño máximo del agregado grueso usado en el concreto.

Los paquetes de varillas serán amarrados a no más de 1.80 metros entre centros. Todo refuerzo tendrá un recubrimiento de 5 centímetros, a menos que los planos indiquen otro.

3.3.3.7. Sección 604.07: Aceptación

El acero de refuerzo y el material para recubrimiento epóxico serán evaluados visualmente y mediante certificados de producción y comerciales. Cada embarque de acero de refuerzo deberá ir acompañado de un certificado de producción Artículo-106.12.

La colocación del acero de refuerzo será evaluada visualmente y por medio de mediciones y ensayes Artículo-106.12.

3.3.3.8. Sección 604.08: Método de Medición

La cantidad de acero de refuerzo a ser pagada será la cantidad que figure en el Pliego de Licitación, a menos que se hagan cambios en el diseño que afecten a esa cantidad, en cuyo caso se ajustará la cantidad del Pliego de Licitación en la cantidad correspondiente al cambio.

Si el Pliego de Licitación considera el pago del acero de refuerzo mediante una Suma Global, no se medirá el acero colocado para los fines de pago. No se medirán ni se hará pago por traslapes introducidos por conveniencia del Contratista.

Cuando en el Pliego de Licitación no figure un concepto de pago para el acero de refuerzo, el costo de éste será considerado como subsidiario de los demás conceptos de pago.

3.3.3.9. Sección 604.09: Bases para el Pago

Las cantidades aceptadas, medidas de acuerdo con lo estipulado en el artículo precedente, serán pagadas al precio de contrato por unidad de medida para los conceptos de pago listados más adelante, precio y pago que serán compensación total por el trabajo prescrito en esta sección.

No se pagará adicionalmente por los traslapes, las grampas, alambre, silletas de apoyo, colgadores u otros materiales o dispositivos usados para amarrar y fijar el refuerzo en su lugar.

Ver Artículo-106.03 y Artículo-110.04. Los pagos serán hechos de acuerdo con los siguientes conceptos y unidades.

	Concepto de Pago	Unidad de Medida
604(1)	Acero de Refuerzo	Kilogramo
604(2)	Acero de Refuerzo	Suma Global

3.3.4. SECCIÓN 606: BARANDAS DE PUENTES Y VIADUCTOS

3.3.4.1. Sección 606.01: Extensión

Este trabajo consistirá en la colocación de barandas o parapetos en puentes y viaductos, suministro del material o combinación de materiales que indiquen los planos, en conformidad razonable con estas especificaciones, con las líneas, pendientes, dimensiones y diseños que figuren en los planos o fueren ordenados por el Ingeniero.

Las barandas para puentes incluirán las guarniciones construidas encima de la acera, de la cara superior de bordillos de más de 15 centímetros de ancho o encima de la calzada, cuando no hubiere acera, y bordillo.

3.3.4.2. Sección 606.02: Clasificación

Las barandas para puentes y viaductos serán clasificadas como: barandas de concreto, barandas de acero, barandas de aluminio y barandas de madera, de acuerdo con el material predominante que contenga cada una. El tipo de baranda a construirse se especificará en las CEC, o se mostrará en los planos.

3.3.4.3. Sección 606.03: Materiales

Los materiales deberán cumplir con los requisitos de las secciones y artículos siguientes:

Cabezas de Pernos y Tuercas de Aleación de Aluminio - Artículo-1017.17

Aleación de Aluminio para Barandas de Puentes - Artículo-1017.16

Alambre para Soldar Aluminio - Artículo-1017.18

Concreto - Sección-602

Pintura - Sección-.610

Acero de Refuerzo - Artículo-1009.01

Acero Estructural - Sección-605

Madera - Sección-607

3.3.4.4. Sección 606.04: Generalidades

Las barandas para puentes y viaductos deberán ser construidas de acuerdo con el alineamiento y niveles que muestren los planos, y no deberán reflejar ningún desnivel que tuviese la estructura. A no ser que fuese especificado de otro modo, todos los postes de la baranda deberán ser verticales. La baranda no deberá ser instalada en un claro hasta que la cimbra y obra falsa provisionales hayan sido retiradas y el tramo esté sostenido por sí solo.

3.3.4.5. Sección 606.07: Barandas de Acero

El montaje de barandas de acero deberá satisfacer los requisitos aplicables de las Sección-902 y Sección-605. Las barandas de acero para puentes se construirán de perfiles de acero estructural, de secciones tubulares, de platinas y barras según lo indique el tipo de baranda mostrado en los planos. El montaje de las barandas de acero debe llenar los requisitos de la Sección-605. Los perfiles, platinas, placas, pernos y tuercas, serán de acero de grado estructural. Las secciones tubulares serán del tipo comercial estándar de acero estructural. Las secciones forjadas serán exactas en sus dimensiones, libres de torceduras y pandeos, y de una apariencia uniforme.

Toda la soldadura cumplirá con las especificaciones de la AWS D.2.0. La soldadura de las superficies expuestas será enrasada con las superficies adyacentes; cuando haya costura en los postes, éstas deberán ser localizadas en las caras de los postes normales al plano de la baranda.

Los elementos galvanizados dañados deberán ser regalvanizados, excepto cuando el Ingeniero permita reparar las superficies dañadas limpiándolas y pintándolas; la pintura deberá ser rica en zinc.

La tubería de acero para barandas de tubo, será del tipo comercial de acero estructural de calidad estándar; las piezas serán fabricadas de tubos de una sola pieza o de platinas forjadas a media caña soldadas con juntas longitudinales.

Las barandas serán alistadas en el lugar de fábrica o taller, y revisados sus alineamientos y pendientes; los paneles de la baranda serán alineados unos con otros con una tolerancia de 1.75 milímetros.

Los postes serán instalados verticales con una tolerancia de desplome que no exceda 6 centímetros en una longitud de poste de 3 metros.

Los postes serán colocados o empotrados en receptáculos sobre una base de mortero y mortereados a su alrededor, o bien anclados en elementos de concreto o acero. Los anclajes de acero se incrustarán en concreto hasta la profundidad de empotramiento mostrada en los planos; estos anclajes deberán resistir por 100 horas una carga de tensión de al menos 3,600 kilogramos para pernos de 16 a 19 milímetros; 1,360 kilogramos para pernos de 9.5 a 12.5 milímetros de diámetro, y 340 kilogramos para pernos de diámetro de 6.3 milímetros.

3.3.4.6. Sección 606.11: Aceptación

Los materiales (exceptuando el concreto, la pintura, el acero de refuerzo, el acero estructural y la madera) para barandas de puentes y viaductos, serán evaluados mediante certificados de producción suministrado por el Contratista de parte del Fabricante o por parte de laboratorios independientes de control de calidad Artículo-106.12. Se deberá entregar un certificado de producción con cada embarque de barandas para puentes y viaducto.

El concreto será evaluado según la Sección-602.

La pintura será evaluada bajo la Sección-610.

El acero de refuerzo será evaluado según la Sección-604.

El acero estructural será evaluado según la Sección-605.

La construcción de barandas de puentes y viaductos será evaluada visualmente y mediante mediciones y ensayes para determinar el cumplimiento con los planos y especificaciones. Artículo-106.12.

3.3.4.7. Sección 606.12: Medición

La cantidad por la cual se pagará bajo este concepto, será el número de metros lineales de baranda de puente o viaducto de los diversos tipos, colocados completos en su lugar y aceptados, medidos a lo largo del alineamiento y de extremo a extremo de los postes al nivel de la elevación final de la baranda. Incluirá todas las obras construidas arriba de la

parte superior del bordillo, o de la acera, y todos los fijadores y anclajes requeridos para fijar la baranda a la estructura. Incluirá la parte de acero de refuerzo para la baranda que se extiende dentro del bordillo. La medición en Suma Global, si así se fijó en el Pliego de Licitación, se hará de conformidad con el Artículo-110.01.

3.3.4.8. Sección 606.13: Bases para el Pago

Las cantidades aceptadas, medidas de acuerdo con lo dispuesto en el artículo precedente, serán pagadas al precio de contrato por unidad de medida para los conceptos de pago listados más adelante que figuren en el Pliego de Licitación, precio y pago que serán compensación total por el trabajo prescrito en esta sección.

Cuando las CEC o los planos requieran la construcción de puente o viaducto con barandas pero en el Pliego de Licitación no figura un concepto estimada o Suma Global, dicha baranda será considerada como parte integrante de la estructura a la que está unidad, y será pagada de acuerdo con lo estipulado en la sección aplicable que comprenda a la construcción el puente o viaducto.

Ver los Artículo-106.03 y Artículo-110.04. Los pagos serán efectuados bajo los siguientes conceptos:

Concepto de Pago		Unidad de Medida
606 (1)	Barandas de Concreto para Puentes y Viaductos	Metro Lineal
606 (2)	Barandas Precoladas para Puentes y Viaductos	Metro Lineal
606 (3)	Barandas de Acero para Puentes y Viaductos	Metro Lineal
606 (4)	Barandas de Aluminio para Puentes y Viaductos	Metro Lineal
606 (5)	Barandas de Madera para Puentes y Viaductos	Metro Lineal

3.3.5. SECCIÓN 611: DISPOSITIVOS DE APOYO

3.3.5.1. Sección 611.01: Descripción

Este trabajo consiste en el suministro e instalación de dispositivos de apoyo para puentes. Los dispositivos de apoyo son designados como planchas elastoméricos, de balancín, de rodillos y deslizantes.

3.3.5.2. Sección 611.02: Materiales

Los materiales deberán cumplir con lo estipulado en los siguientes artículos:

Almohadillas Elastómericas de Apoyo - Artículo-1017.14

Superficies de Tetrafluoretileno (TFE) para Apoyos - Artículo-1017.20

3.3.5.3. Sección 611.03: Generalidades

(a) Dibujos de Taller.- El Contratista deberá preparar y someter a la aprobación del Ingeniero los dibujos para los apoyos de acuerdo con el Artículo-106.02 y la Sección-18 de las "Especificaciones Estándar para Puentes de Carreteras" de la AASHTO, División II, Volumen II. En ellos deberá mostrar todos los detalles de los apoyos incluso el material que se propone usar. Antes de iniciar la fabricación, el Contratista deberá obtener por escrito la aprobación del Ingeniero.

(b) Fabricación.- Los apoyos deberán ser fabricados de acuerdo con las especificaciones indicadas en el párrafo precedente. El acabado superficial de los componentes de los apoyos en contacto uno con el otro o con el concreto, pero no embebidos en el concreto, se ajustarán a lo estipulado en el Artículo-605.05(2).

El conjunto de los apoyos deberá ser armado de previo en el taller, donde se deberá comprobar si está completo y si su geometría está correcta. Los componentes de los apoyos y pernos de anclajes de acero deberán ser galvanizados de acuerdo con lo estipulado en el Artículo-1017.11. No se deberán galvanizar los componentes de apoyos y pernos de anclaje de acero inoxidable.

(c) Empaque, manipulación y almacenaje.- Antes de embarcar en la fábrica, se deberá identificar claramente cada componente del apoyo y marcar en su parte superior su lugar y orientación en la estructura. Se deberán empernar, amarrar o fijar de cualquier otra manera los apoyos para evitar cualquier movimiento relativo.

Los apoyos deberán ser empacados para protegerlos de daños causados por el embarque, la manipulación, el clima u otros peligros. No se deberá desarmar el conjunto de los apoyos en el sitio de la obra, excepto para inspección e instalación.

Se almacenarán todos los dispositivos de apoyo y sus componentes en el sitio de la obra en un lugar que ofrezca protección contra los daños ambientales y físicos.

(d) Construcción e Instalación.- Se deberán limpiar los apoyos de todas las sustancias perjudiciales. Se deberá instalar en las posiciones mostradas en los dibujos. Ajústense los apoyos y sus componentes a las dimensiones mostradas en los dibujos o prescritas por el Fabricante; también deberán ser ajustados de acuerdo con las instrucciones del Fabricante para compensar por la temperatura de instalación y los futuros movimientos del puente.

Fíjese el nivel de los apoyos del puente en la elevación y posición exactas. Se deberá proveer apoyo completo y parejo en todas las superficies exteriores de contacto del apoyo. Si las superficies del apoyo están a elevaciones inapropiadas, no a nivel, o si los apoyos no pueden, por cualquier otra causa, ser fijados apropiadamente, el Contratista deberá notificar el hecho al Ingeniero y someter una propuesta por escrito para modificar la instalación en forma aceptable.

Los conjuntos de apoyos metálicos deberán ser asentados, no embebidos en el concreto, sobre el concreto con un rellenador o material de tela aprobado.

Los apoyos de almohadillas elastoméricas deberán ser asentados directamente sobre superficies de concreto debidamente preparadas, sin material de lecho.

Se deberán fresar las superficies de los apoyos asentados directamente sobre acero para proveer una superficie plana y a nivel sobre la cual colocar el apoyo.

3.3.5.4. Sección 611.04: Apoyos Elastoméricos

Los apoyos incluyen almohadillas no reforzadas (constituidas solamente por el elastómero) y apoyos reforzados con láminados de acero o de tela.

Se deberán reforzar los apoyos elastoméricos de más de 15 mm de espesor, con laminados a cada 15 mm a través de todo el espesor.

Si no está especificado, úsese un elastómero de 50 al durómetro, capaz de sostener un esfuerzo compresivo promedio de 7 MPa.

Los apoyos elastoméricos deberán ser fabricados de acuerdo con AASHTO M 251. Se deberá usar material que llene los requisitos de tolerancia a la inflamación, acabado y apariencia del "Manual sobre el Hule" ("Rubber Handbook") publicado por la Asociación de Manufactureros de Hule Inc., RMA F 3 y T.063 para apoyos moldeados y, RMA F 2, para apoyos extruidos. Se determinará el cumplimiento con los criterios de aceptación de AASHTO M 251, nivel I.

Cada apoyo reforzado deberá ser marcado con tinta indeleble o pintura flexible. Las marcas de información deberán incluir el número de la orden, número del lote, número de identificación del apoyo, el tipo del elastómero y número del grado. A menos que fuera especificado de otra manera, las marcas se pondrán en una cara que sea visible después del montaje del puente. Además, el Contratista deberá suministrar todos los números de los apoyos individuales.

Se deberán colocar los apoyos sobre una superficie a nivel. Se corregirá cualquier mala alineación en el apoyo hasta formar una superficie a nivel. No se deberán soldar vigas armadas o planchas de base de acero a las planchas exteriores del apoyo, a menos que hubiera más de 40 mm de acero entre la soldadura y el elastómero. No se deberá exponer el elastómero o el pegamento del elastómero a temperaturas instantáneas de más de 200oC.

3.3.5.5. Sección 611.08: Pernos de Anclaje

Úsense pernos arponados o de rosca que cumplan con ASTM A 307 o los que se indique en los planos o en las Especificaciones Especiales.

Se deberán taladrar los agujeros para los pernos de anclaje y luego fijar los pernos en lechada de cemento Portland no contráctil o fíjeseles antes de colar el concreto.

Se deberán ajustar las posiciones de los pernos de acuerdo con la temperatura de la superestructura, según sea requerido. No se deberá restringir el movimiento de la superestructura en los apoyos móviles por medio de pernos o tuercas de anclaje.

611.09 Lecho de la Mampostería.- Se colocará rellenador o tela como material de asiento o lecho debajo de las planchas de mampostería, si está requerido en los planos o Especificaciones Especiales. Úsese el tipo de rellenador o tela especificada e instálese en forma tal que se provea un soporte pleno sobre las áreas de contacto. Límpiense bien las superficies de contacto del concreto y del acero inmediatamente antes de colocar el material de lecho y de instalar las planchas de apoyo o de mampostería.

611.10 Aceptación.- Los dispositivos de apoyo serán evaluados visualmente y mediante certificados de producción Artículo-106.12 y Artículo- 106.12. El Contratista deberá suministrar un certificado de producción por cada embarque de dispositivos de apoyo.

Las instalación de los dispositivos de apoyo será evaluada visualmente y mediante mediciones y ensayes Artículo-106.12.

3.3.5.6. Sección 611.11: Método de Medición

Los dispositivos de apoyo serán medidos por unidad (Cada Uno).

3.3.5.7. Sección 611.12: Base para el Pago

Las cantidades aceptadas, medidas de acuerdo con lo estipulado en el artículo precedente, serán pagadas al precio de contrato por unidad de medida para los conceptos de pago listados más adelante que aparezcan en el Pliego de Licitación, precio y pago que serán compensación total por el trabajo prescrito en esta sección.

Ver los Artículos-106.03 y Artículo-110.04. Los pagos serán efectuados bajo los siguientes conceptos:

Concepto de Pago	Unidad de Medida
611(1) Dispositivo de Apoyo	Cada Uno

4. DIVISIÓN III: ESPECIFICACIONES DE CALIDAD DE LOS MATERIALES

4.1. SUBDIVISIÓN 1000: ESPECIFICACIONES DE CALIDAD DE LOS MATERIALES

4.1.1. SECCIÓN 1001: CEMENTO HIDRÁULICO

4.1.1.1. Sección 1001.01: Cemento Portland y Cemento para Mampostería

El cemento deberá satisfacer los requisitos de las especificaciones que se mencionan a continuación para los tipos especificados o permitidos:

CUADRO 1001-1
TIPOS DE CEMENTO

Tipo	Especificación
Cemento Portland	AASHTO M 85
Cemento hidráulico mezclado	AASHTO M 240
Cemento para Mampostería	ASTM C 91

A no ser que fuese autorizado por el Ingeniero, no se permitirá en la obra la utilización de diferentes marcas o tipos de cemento, o la misma marca o tipo de cemento de diferentes fábricas.

El Contratista deberá suministrar los medios adecuados para el almacenamiento y protección del cemento contra la humedad. Se rechazará el cemento que por cualquier causa hubiese llegado a fraguar parcialmente o que contenga terrones de cemento aglutinado. No se utilizará el cemento recuperado de bolsas desechadas o usadas.

4.1.2. SECCIÓN 1003: AGREGADOS, SUELOS Y ROCA

4.1.2.1. Sección 1003.01: Agregado Fino para Concreto de Cemento Portland

Suministrar arena que llene los requisitos de AASHTO M6 Clase B, incluyendo el requisito suplementario para el agregado reactivo, excepto las enmiendas o suplementos siguientes:

(a) Material que pasa el tamiz de 75 µ-m, AASHTO T 11 - 3.0% máx.

(b) Valor del Equivalente de Arena, AASHTO T 176 (método de testigo)- 75 mín.

Para agregado fino de peso liviano, cumplir con AASHTO M - 195.

El agregado fino no deberá contener sustancias perjudiciales en exceso de los siguientes porcentajes:

Terrones de arcilla - 1.0

Carbón de piedra y lignito - 1.0

Material que pase por el tamiz No. 200 (75µm) - 3.0

Otras sustancias, según lo indiquen las CEC.

4.1.2.2. Sección 1003.02: Material Grueso para Concreto de Cemento Portland

De acuerdo con AASHTO M 80, Clase A, excepto las enmiendas o suplementos siguientes:

(a) Desgaste de Los Ángeles, AASHTO T 96 - 40% máx.

(b) Adherencias FLHT 512 - 1.0% máx.

Las graduaciones aceptables aparecen en el Cuadro 1003-2.

Para losas de puentes o capas superficiales, no usar agregado del que se sepa que se pule o agregados carbonatados que contengan menos del 25.0%, en peso, de residuo insoluble, determinado de acuerdo con AASHTO D 3042.

Para agregados gruesos de peso liviano, cumplir con AASHTO M 195.

4.1.2.3. Sección 1003.20: Relleno Estructural

El Contratista deberá suministrar material granular drenante libre de todo exceso de humedad lodo, raíces, césped u otros materiales perjudiciales y cumplir con los siguientes requisitos:

(a) Dimensión máxima - 75 mm

(b) Material que pasa por el tamiz de 75 µm (AASHTO T 27 y T 11) - 15% máx.

(b) Límite Líquido, AASHTO T 89

4.1.2.4. Sección 1003.24: Suelos

(A) Relleno de Fundación.- Suministrar material libre de humedad excesiva, raíces, césped u otros materiales perjudiciales que cumplan con lo siguiente:

(1) Material que pasa el tamiz de 50 mm - 100%

(2) Clasificación del suelo, AASHTO M 145 - A-1-a

(3) En ambientes húmedos, material que pasa por el tamiz de 75 µm,

AASHTO T 27 y T 11 - 6% máx.

(E) Préstamo no Clasificado.- Suministrar material granular libre de exceso de humedad, lodo, raíces, césped, zacate u otros materiales perjudiciales que cumplan con lo siguiente:

(1) Máxima Dimensión - 600 mm.

(2) Clasificación del suelo, AASHTO M 145 - A-1, A-3 ó A-2-4

(F) Préstamo Selecto.- Suministrar material granular libre de exceso de humedad, lodo, raíces, césped u otros materiales perjudiciales y cumpla con lo siguiente:

(1) Graduación - Cuadro 1003-14

(2) Límite Líquido, AASHTO T 89 - 30 máx.

CUADRO 1003-14
Graduación para Préstamo Selecto

Tamaño del Tamiz	Porcentaje en Masa que pasa el Tamiz designado (AASHTO T 27)
75 mm.	100
25 mm.	70 - 100
4.75 mm.	30 - 70
150 µm	0 - 15

(I) Relleno Granular Selecto para Estructuras.- Suministrar material granular, sano, durable, libre de materia orgánica u otros materiales perjudiciales (tales como esquisto u otras partículas suaves con baja durabilidad) que cumpla con lo siguiente:

(a) Requisitos de Calidad

(1) Graduación - Cuadro 1003-17

(2) Angulo de corte de fricción Interna, AASHTO T 236 - 34° mín.

NOTA: Compactar las muestras para el ensaye AASHTO T 236 al 95% de la densidad máxima determinada de acuerdo a AASHTO T 99, método C o D y corregida por materiales de sobretamaño, según AASHTO T 99, Nota 7.

(3) Prueba de sanidad al sulfato de sodio, pérdida en 5 ciclos,

AASHTO T 10 - 15% máx.

(4) Desgaste, Los Ángeles, AASHTO T 96 - 50% máx.

(5) Límite Líquido, AASHTO T 89 - 30 máx.

(b) Requisitos Electroquímicos

(1) Resistividad, AASHTO T 288 - 3000 Ω .cm. mín.

(2) pH, AASHTO T 289 - 5.0 a 10.0

(3) Contenido de sulfato, AASHTO T 290 - 1000 ppm. máx.

(4) Contenido de cloruro, AASHTO T 291-200 ppm. máx.

NOTA: Las pruebas para el contenido de sulfato y cloruro no son necesarias cuando el pH está entre 6.0 y 8.0 y la resistividad es mayor de 5000 ohm centímetros.

CUADRO 1003-17
Graduación para Relleno Granular Selecto para Estructuras

Tamaño del Tamiz	Porcentaje en Masa que pasa el Tamiz designado (AASHTO T 27 y T 11)
100 mm.	100
75 mm.	75 - 100
75 µm.	0 - 15

4.1.3. SECCIÓN 1005: MATERIALES PARA JUNTAS Y GRIETAS

4.1.3.1. Sección 1005:01: Rellenos para Juntas, Selladores, Sellos y Camisas

Se ajustarán a lo siguiente:

(A) Selladores de Juntas y Rellenadores de Grietas.- Suministrar un certificado comercial que identifique la bachada y/o el número del lote, material, cantidad de la bachada, fecha y tiempo de manufactura, y el nombre y dirección del Fabricante.

(1) Selladores de juntas de concreto vertido en caliente del tipo elástico - AASHTO M173

(2) Sellador de juntas, vertido en caliente, para pavimentos de concreto y asfálticos - AASHTO M 301

(3) Rellenador de grietas, aplicado en caliente, para pavimentos de concreto asfáltico y concreto de Cemento Pórtland - ASTM D 5078

(a) Fuente y grado del cemento asfáltico.

(b) Contenido y masa de hule granulado total, como porcentaje de la mezcla de asfalto y hule.

(c) Tipo (1) y contenido de cada tipo (1) (si van mezclados) de hule granulado.

(i) Masa, como porcentaje de hule combinado.

(ii) Graduación del hule granulado.

(d) Tipo de asfalto modificado (si contiene).

(e) Cantidad del modificador del asfalto y masa como porcentaje del cemento asfáltico.

(f) Otros aditivos.

(g) Temperaturas de manejo y aplicación.

(h) Procedimientos de aplicación recomendados por el Fabricante.

(B) Rellenadores Premoldeados para Juntas de Expansión.- Suministrarlos de una sola pieza para la profundidad y ancho requeridos por la junta.

(1) Rellenadores de juntas de expansión premoldeados para concreto (tipo bituminoso) - AASHTO M 33

(2) Rellenadores de juntas de expansión de goma esponjosa, premoldeados, para construcción de pavimentos y estructuras de concreto - AASHTO M 153

(3) Rellenadores de juntas de expansión, premoldeados, para construcción de pavimentos de concreto y estructuras (1) - AASHTO M 153

(4) Rellenadores de juntas de expansión, premoldeados, para construcción de pavimentos de concreto y estructuras (tipo bituminoso no extensible y elástico) - AASHTO M 213

NOTA: (1) No se use en estructuras de concreto muy importantes.

(C) Sellos y Camisas Premoldeados para Juntas.-

(1) Aplicaciones en Pavimentos.- Suministrar un sello elastomérico de policloropreno que cumpla con la Norma AASHTO M 220. Úsese un adhesivo lubricante que cumpla con lo siguiente:

(a) Contenido de sólidos por masa, ASTM D 2369 - 22% mín.

(b) Resistencia a la peladura, AASHTO D 903 - 10 MPa máx.

(c) Edad de manufactura - 9 meses máx.

(2) Aplicaciones en Pozos de Visita, Tragantes y Drenaje.- Suministrar un sello multiseccional de hule neopreno y etileno propileno dimónomero (EPDM), con un espesor mínimo de 1.5 milímetros. Antes del embarque recúbrase el hule con un sellador de hule butil que no se endurezca para producir un sello impermeable al agua al ser instalado. Las propiedades y sus valores se muestran en el Cuadro 1005-1

CUADRO 1005-1
Sellos Preformados para Juntas

Propiedades Físicas	Método de Prueba ASTM	EPDM	Neopreno	Mástique de Butil
Tensión, MPa	D 412	10	12	----
Alargamiento, %	D 412	440	230	280
Resistencia al Desgarre, N/mm	D 624 (Dado B)	40	20	----
Rebote, %, 5 mín.	C 972	-----	-----	11
Rebote, %, 2 hrs.	C 972 (Mod.)	-----	-----	12

(D) Rellenador de Espuma.- Suministrar un rellenador de poliestireno expandido que tenga una resistencia a la compresión de no menos de 70 kilopascales.

(E) Sellador Vertido en Frío.- Suministrar un compuesto sellador de juntas, a base de hule de silicón de bajo módulo, de una sola parte, que cumpla con la Norma FSS TT-S-1543, clase A, con un alargamiento último de 1200 por ciento.

(F) Sellador de Juntas de Silicón de Bajo Módulo.- Suministrar una formulación de silicón de una parte, que cumpla con lo siguiente:

(1) Flujo MIL S-8802 - 8 mm, máx.

(2) Tasa de Extrusión, MIL S-8802 - 75 a 250 g/min.

(3) Tiempo libre de Pegajosidad MIL S-8802 - 20 a 75 minutos

(4) Gravedad Específica, ASTM D 792, método A - 1.010 a 1.515

(5) Dureza al durómetro, shore A, ASTM D 2240 - 10 a 25

(6) Fatiga a la tensión @ 150% de alargamiento, ASTM D 412 - 520 KPa máx.

(7) Alargamiento, ASTM D 412 - 500% mín.

(8) Peladura (adherencia), MIL S-8802 - > 9 Kg. con > 75% fallas a la cohesión

(9) Edad de manufactura - 6 meses máx.

(G) Varillas de Respaldo.- Suministrar polietileno de celda cerrada que cumpla con ASTM D 3204, tipo 1. Usar un sellador compatible según lo recomiende el Fabricante de la varilla. Para el tamaño de la varilla de respaldo cúmplase con el Cuadro 1005-2.

4.1.4. SECCIÓN 1009: ACERO DE REFUERZO Y CABLE DE ALAMBRE

4.1.4.1. Sección 1009.01: Acero de Refuerzo

Este material debe satisfacer los requisitos de las siguientes especificaciones de la AASHTO:

Material	Especificación
Varillas de lingotes de acero para refuerzo de concreto.	AASHTO M 31 (A 615 Clase 40; Clase 60)
Varillas de rieles de acero para refuerzo de concreto.	AASHTO M 42 (A 616, Clases 50 y 60)
Varillas de ejes de acero para refuerzo de concreto.	AASHTO M 53 (ASTM A 617)
Armadura de malla fabricada con barras o varillas de acero, para refuerzo.	AASHTO M 54 (ASTM A 184)
Malla de tela de alambre de acero soldado, para refuerzo de concreto.	AASHTO M 55 (ASTM A 184)
Malla de tela de alambre de acero deformado y soldado para refuerzo de concreto.	AASHTO M 221 (ASTM A 497)

Las varillas de refuerzo para estructuras de concreto, exceptuando las varillas del número 2, deben ser deformadas de acuerdo con AASHTO M 42, M 31 y M 53, (ASTM A 616, A 615, A 617) para los números del 3 al 11.

Las barras de juntas y tirantes deben satisfacer los requisitos de AASHTO M 31 (ASTM A 615), o los de M 42 (A 616), excepto que no se debe emplear acero de rieles para las barras de conexión que tengan que ser dobladas y enderezadas durante la construcción. Las barras de conexión deben ser barras deformadas, y las de juntas, deben ser barras redondas, lisas. También deben estar exentas de rebabas u otra deformación que fuese restrictiva para el resbalamiento dentro del concreto. Antes de su entrega en el lugar de la obra, un mínimo de la mitad del largo de cada barra para juntas, debe pintarse con una mano de pintura aprobada, de plomo o de alquitrán.

Los casquillos para las varillas de juntas deben ser de metal, de un diseño aprobado para recubrir 5 cm más o menos 6 mm de la espiga, con un extremo cerrado y con un tope adecuado para sujetar el extremo del casquillo, por lo menos, 2.5 cm del extremo de la varilla de junta. Los casquillos deben ser construidos de tal modo que no se aplasten durante la construcción.

4.1.5. SECCIÓN 1011: MATERIALES PARA CURADO DEL CONCRETO Y ADITIVOS

4.1.5.1. Sección 1011.01: Materiales para el Curado

Los Materiales para el curado del concreto deben satisfacer los siguientes requisitos, según fuesen especificados:

(a) Tela de bramante hecha con yute o kenaf - AASHTO M 182

(b) Papel impermeabilizante - AASHTO M 171

(c) Película de polietileno - AASHTO M 171

(d) Compuestos formadores de membranas líquidas - AASHTO M 148

4.1.5.2. Sección 1011.02: Aditivos para Inclusión de Aire

Estos deberán satisfacer los requisitos de AASHTO M 154. No se debe combinar los aditivos químicos juntos en una mezcla, a menos que sean compatibles. Suministrar la documentación que respalde la compatibilidad de parte del Fabricante. No se podrá usar aceleradores clorados.

4.1.5.3. Sección 1011.03: Aditivos Químicos

Los aditivos reductores del agua, retardadores del fraguado y aceleradores del fraguado, o combinaciones de éstos, deben estar conformes con los requisitos de AASHTO M194.

4.1.5.4. Sección 1011.04: Modificados de Latex

Súplase una emulsión polimérica formadora de película, que sea homogénea y no tóxica con estabilizadores agregados en fábrica. Deberán cumplir con lo siguiente:

(a) Color - Blanco

(b) (b) Tipo de polímero butadieno estireno - 68 + 4% de estireno32 + 4%debutadieno

(c) Cloruros - 0%

(d) Tamaño de la partícula del polímero - 0.15 a 0.25 µm promedio

(e) Estabilizadores de la emulsión - Surfactante aniónico y no iónico

(f) Sólidos - 6.5 a 49.0%

(g) Masa - 1.00 a 1.02 kg/L

(h) Ph - 9 a 13

(i) Vida en desuso - 2 años mín.

4.1.6. SECCIÓN 1012: MATERIALES VARIOS

4.1.6.1. Sección 1012.01: Agua

a) Agua para mezcla y curado de concreto de cemento.- El agua que sea utilizada para mezclas y curado del concreto, u otras aplicaciones, debe estar razonablemente limpia y exenta de ácido, álcali, azúcar, materia vegetal o cualquier otra sustancia perjudicial para el producto final. El agua será analizada de acuerdo con AASHTO T 26 y deberá satisfacer los requisitos que señala dicha norma.

4.1.6.2. Sección 1012.04: Colorante para Revestir Concreto

Suministrar un toneador coloreado semi-opaco que contenga resinas copolímeras de metil metacrilatoetil acrilatos u otras equivalentes, solventes y pigmentos para dar tono de colores suspendidos en solución por un agente químico para suspensión. Los pigmentos tonadores de color consistirán en silicatos laminares, dióxido de titanio y óxidos inorgánicos. Deberán cumplir con lo siguiente:

(a) Masa por litro, ASTM D 1475 - 38 Kg. min.

(b) Sólidos por masa (peso), ASTM D 2369 - 30% min.

(c) Sólidos por volumen - 21% min.

(d) Tiempo de secamiento, ASTM D 1640 - 30 min. a 21°C y 50% de humedad

(e) Cambio de color, ASTM D 822, 1000 hr. - No hay cambio apreciable

(f) Resistencia a los ácidos, álcalis, gasolina y esencias minerales, ASTM D 543 - Excelente

(g) Transmisión de vapor de agua del interior del concreto, ASTM D 1653 - Transmisible

(h) Absorción de la humedad del exterior en los poros de la superficie del concreto FSS TT-C-555 - Reduce la tasa

(i) Oxidación a través del tiempo – Ninguna

4.1.6.3. Sección 1012.09: Recubrimientos Protectores del Concreto

Suministrar recubrimientos protectores para pisos de puentes, bordillos, cunetas, aceras y las partes de concreto de las barandas de puentes, que se ajusten a uno de los siguientes:

(a) Aceite de Linaza Heroida - ASTM 2 D 260, Tipo I ó II

(b) Esencias de Petróleo (Esencias Minerales) - ASTM D 235

4.1.6.4. Sección 1012.10: Materiales Puzolánicos

Estos deberán cumplir con los siguientes requisitos:

(a) Ceniza Fina de Altos Hornos (CFAH) - AASHTO M 295

(b) Escoria de Horno de Fundición de Hierro Molida - AASHTO M 302 grado 100 ó 120

(c) Humo Silíceo (Microsílicea) - AASHTO M 307

4.1.6.5. Sección 1012.15: Lechada

Proveer mezclas de lechada que se ajusten a los siguientes según el tipo o tipos especificados:

(a) Lechada de Cemento Hidráulico.- Provéase una mezcla de cemento Portland, agregado fino, agua, aditivos expansivos y/o CFAH, que cumplan con lo siguiente:

(1) Resistencia a la compresión a los 7 días, AASHTO T 106 - 4 MPa mín.

(2) Flujo (tiempo de efusión), FLH T 502 ó ASTM C 939 - 16 a 26 seg.

Nota: Una mezcla más fluida que tenga un tiempo de efusión en el cono de flujo de 9 a 15 seg., puede ser usada durante la inyección inicial.

El Contratista deberá suministrar un certificado de producción con lo siguiente:

- Certificación de fábrica para el cemento.
- Análisis físicos y químicos para las puzolanas.
- Resultados de ensayes realizados por un laboratorio independiente calificado (resistencias, tiempos de flujo en el cono, contracción yexpansión observadas y tiempo de fraguado inicial a 1 día, 3 días y 7 días).

(b) Lechada y Mortero con Polímero.- Proveer un aglutinante polimérico y agregado fino en las proporciones recomendadas por el Fabricante del polímero con una resistencia a la compresión mínima de 25 MPa en 4 horas.

(c) Lechada no Contraible.- De acuerdo con ASTM C 110.

(d) Masilla (Lechada).- Deberá cumplir con lo siguiente:

(1) Resistencia adhesiva a los 28 días método de ensaye de adherencia de arrufo aglutinado - 2 MPa mín.

(2) Resistencia al congelamiento y descongelamiento ASTM C 666, método B, 300 ciclos - No se producen grietas ni deslaminaciones

(3) Intemperismo acelerado, 5000 horas - No hay defectos visibles

(4) Resistencia al rociado en tablillas 300 horas - No hay deterioro o pérdida de adherencia

(5) Absorción, ASTM C 67 - 3.5% máx.

(6) Resistencia a la flexión, ASTM C 348, 28 día - 6.8 MPa mín.

(7) Resistencia a la compresión AASHTO T 106, 28 días - 27.5 MPa mín.

(e) Lechada de Cemento Portland.- Provéase una parte de cemento Portland y 3 partes de arena. Revolver completamente con agua hasta producir una pasta de consistencia espesa y cremosa.

4.1.7. SECCIÓN 1013: MATERIALES PARA MEJORAS A LOS LADOS DE LA VÍA Y PARA CONTROL DE LA EROSIÓN

4.1.7.1. Sección 1013.08: Materiales Misceláneos

h) Curación de heridas de los Árboles.- La curación para el tratamiento de heridas o cortaduras en los árboles, deberá ser como sigue:

1.- Una pintura negra antiséptica aprobada, con base de asfalto negro.

2.- Una pintura negra antiséptica aprobada, compuesta de caldo Bordelés, aceite crudo de linaza y negro de humo, o bien,

3.- Una pintura negra aprobada, compuesta de óxido de zinc, aceite crudo de linaza y negro de humo.

4.1.8. SECCIÓN 1015: PILOTES

4.1.8.1. Sección 1015.03: Pilotes de Concreto

Fabríquense los pilotes con concreto Clase A (AE) de acuerdo con la Sección-602. Las varillas de refuerzo de acero de lingote o de acero relaminado (para rieles), deberán cumplir con lo estipulado en el Artículo-1009.01.

Constrúyanse los pilotes de concreto premoldeado de acuerdo con la Sección-602.

Úsense moldes metálicos, de plywood o de madera cepillada que sean herméticos al agua, rígidas y exactamente alineados. Úsese una tira de ochavar de 25 mm en todas las esquinas.

Cuélense los pilotes por separado o, si se cuelan pilotes alternos de una camada, cuélense los pilotes intermedios, por lo menos, 4 días después de que los pilotes adyacentes hayan sido colados. Sepárense los pilotes colados en camadas con papel alquitranado u otro material separador adecuado.

Colóquese el concreto en cada camada en una operación continua para evitar la formación de bolsas de piedra ratoneras u otros defectos. Déjense los moldes en su lugar por lo menos 24 horas.

Háganse los pilotes rectos de manera que si se estira una cuerda entre la cabeza y la punta, en cualquiera de las caras, la cuerda no estará a más de 25mm de la cara del pilote en cualquier punto. Hágase la superficie del pilote exacta, lisa, pareja y libre de ratoneras y huecos.

Remuévanse los anclajes de izamiento a una profundidad de por lo menos 25 mm debajo de la superficie del concreto y rellénese con concreto el hoyo resultante. Dese el acabado a la superficie de cada pilote con un acabado superficial ordinario de Clase 1, de acuerdo con el Artículo-602.12. Cúrense los pilotes de acuerdo con las Sección-602, según corresponda.

Si no se preparan cilindros de concreto para ensayes, no se moverán los pilotes hasta que hayan sido curados, por lo menos, por 14 días a una temperatura mínima de 15ºC. No se deberán transportar o hincar pilotes hasta que hayan sido curados durante 21 días a una temperatura mínima de 15ºC. Cuando se haya usado cemento de alta resistencia inicial, no se muevan, transporten o hinquen los pilotes hasta que hayan sido curados, por lo menos, durante 7 días.

4.1.8.2. Sección 1015.04: Cubiertas de Acero

Suminístrense cubiertas (camisas) de acero para pilotes ya sean cilíndricas o ahusadas, ya sean soldadas en espiral, soldadas con costura recta o de tubo sin costura. Úsese solamente un tipo de cubierta para pilotes a través de toda una estructura. Los espesores de pared de cubierta se ajustarán a los siguientes mínimos:

- Diámetro exterior del cilindro < 350 mm - 6 mm
- Diámetro exterior del cilindro > 350 mm - 10 mm
- Ahusado o aflautado - 4.5 mm

(a) Cubiertas Hincadas sin Mandril.- Para pilotes de concreto ahusados continuos o ahusados por peldaños, colados en el sitio, provéanse cubiertas que tengan un diámetro mínimo de 300 mm a nivel de recorte y una punta con un diámetro mínimo de 200mm. Para pilotes de concreto de diámetro constante colados en el sitio, provéanse cubiertas que tengan un diámetro nominal mínimo de 270 mm.

Fabríquense las cubiertas de una plancha de material de no menos de 4.5 mm de espesor y cumpla con AASHTO M 183 M. La cubierta podrá ser soldada en espiral o longitudinalmente, y ser ahusada o de sección constante. Séllense las puntas según lo muestren los planos.

(b) Cubiertas Hincadas con Mandril.- Provéanse cubiertas de suficiente resistencia y espesor para soportar la hincadura sin sufrir daños ni distorsiones ni torceduras perjudiciales debidas a la presión del suelo después de hincadas y que se haya quitado el mandril. Los diámetros de la cabeza y de la punta se ajustarán a lo especificado en las Especificaciones Especiales.

4.1.9. SECCIÓN 1017: METAL ESTRUCTURAL

4.1.9.1. Sección 1017.13: Almohadillas Elastoméricas de Apoyo

Las almohadillas elastoméricas de apoyo deberán cumplir con la Norma AASHTO M251.

4.1.9.2. Sección 1017.14: Aleación de Aluminio Estructural

Ésta deberá cumplir con las "Especificaciones para Estructuras de Aluminio" publicadas por la AA. Para material de juntas de expansión de aluminio, suministrar aleación de aluminio extruido 6061-T6.

4.1.9.3. Sección 1017.16: Cabezas de Pernos y Tuercas de Aluminio

Estas piezas deberán suministrarse de acuerdo con la Norma B18.2 de la ANSI, para exágonos pesados. Las roscas deberán ajustarse a la Norma B1.1 de la ANSI, Clase 2, para la serie de roscas de hilo grueso.

4.1.9.4. Sección 1017.17: Alambre para Soldar Aluminio

El alambre para soldar aluminio deberá satisfacer los requisitos de las especificaciones siguientes:

CUADRO 1017-1
ALAMBRE PARA SOLDAR ALUMINIO

Serie de aleaciones :	Especificación	Alambre
3xxx y 6xxx	AWS 5.10	ER 4043
3xxx, 5xxx y 6xxx		ER 5356
5xxx y 6xxx		ER 5556 ó ER 5183

4.1.9.5. Sección 1017.18: Sellos Elastoméricos de Compresión para Juntas

Los sellos elastoméricos de compresión para juntas deberán cumplir con los requisitos de AASHTO M 220.

CUADRO 1017-2
Aleaciones de Aluminio para Sistemas de Barandales para Puentes

COMPONENTES DEL BARANDAL	Designación de la Aleación (ASTM y AA)								
	Placas y Láminas	Tubos Estirados sin Forma	Barras, Varillas y Alambre	Barras, Varillas, Perfiles y Tubos	Tubos	Perfiles Estructurales Estándar	Remaches en Frío y Alambre y Varillas de Remachar en Frío	Fundiciones en Arena	Fundiciones en Moldes Permanentes
Especificaciones ASTM	B 209	B 210	B 211	B 211	B 241	B 308	B 316	B 26	B 108
Postes y Bases para Postes, Estructurales : Forjados				6061-T6	6061-T6	6061-T6			
Fundidos					6063-T6				A444.0-T4
Postes Ornamentales Forjados				6063-T6	6063-T6			356.0-T6	A356.0-T6
Fundidos								356.0-T6	A356.0-T6
Barandas y Camisas, Estructurales: Forjados		6061-T6 6063-T6		6061-T6 6063-T6 6351-T5	6061-T6 6063-T6	6061-T6			
Pernos y Tornillos, Varios [2] [3] Aluminio Forjado			2024-T4[4] 6061-T6[5]						
Acero Inoxidable									
Acero Galvanizado									
Acero Aluminizado									
Tuercas (6) Forjadas			2024-T4	6061-T6[7]					
De 6 mm y menos (3)			6061-T6						
De 5 mm y más			6262-T9						

Notas Generales : El temple "F" se aplica a productos que adquieren algún temple en los procesos de fabricación.

CUADRO 1017-2 (Continuación)
Aleaciones de Aluminio para Sistemas de Barandales para Puentes

COMPONENTES DEL BARANDAL	Designación de la Aleación (ASTM y AA)								
	Placas y Láminas	Tubos Estirados sin Forma	Barras, Varillas y Alambre	Barras, Varillas, Perfiles y Tubos	Tubos	Perfiles Estructurales Estándar	Remaches en Frío y Alambre y Varillas de Remachar en Frío	Fundiciones en Arena	Fundiciones e Moldes Permanentes
Especificaciones ASTM	B 209	B 210	B 211	B 211	B 241	B 308	B 316	B 26	B 108
Arandelas Planas [2] Forjados	Aldad 2024-T4 Aldad 2024-T3 [9]								
Arandelas de Presión : Forjadas			7075-T6						
Remaches : Forjados				6061-T6			6061-T6[1] [9] 6061-T4[9] [10]		
Laminillas de Calza Forjadas	1100-0			6063-F[7]				443.0-F	
Fundidas									
Relleno de Soldadura: Forjado						5356			
Casquetes Terminales Forjados	6061-T6			6061-T6				356.0-T6[8] 356.0-F	
Fundidos								443.0-F	

Notas Especificas : (1) Solamente la composición química.
(2) Usar tuercas y arandelas compatibles de acero inoxidable o recubiero. No usar aluminio en pernos de anclaje.
(3) Recubrir la aleación 2024-T4 con un espesor mínimo de 5 um de recubrimiento anódico con un sello de dicromato o agua hirviendo.
(4) Usar la aleación 2024-T4 para pernos que soportan carga y pernos menores.
(5) Usar la aleación 6061-T6 como material alternativo para pernos menores.
(6) Usar con pernos y tornillos de aluminio. No usar aluminio para tuercas y arandelas de pernos de anclaje.
(7) Una alternativa deseable es la B 211.
(8) Usar el temple T3 para espesores menores de 6 mm., y el temple T4 para espesores de 6mm., y mayores.
(9) Usar para remaches para remachar en frío.
(10) Usar para remaches a colocar en caliente (5301°C a 565°C). *Aldad (Marca de Fábrica) = Aluminio revestido con Aluminio Duro.

4.1.9.6. Sección 1017.20: Superficies de Tetrafluoretileno (TFE) para Apoyos

(a) Resina de TFE.- Suministrar resina TFE virgen conforme a la Norma ASTM D 1457 y lo siguiente:

(1) Gravedad Específica 2.13 a 2.19

(2) Punto de Fusión 328°C + 1°C

(b) Material de Relleno.- Suministrar fibras de vidrio hechas en fábrica, carbón u otro material inerte aprobado.

(c) Material Adhesivo.- Suministrar adhesivo de resina epóxica que cumpla con FSS MMM-A-134, película de FEP o uno igual aprobado.

(d) Lámina de TFE No Rellenada.- Suministrar lámina de TFE no rellenada hecha de resina de TFE, que cumpla con lo siguiente:

(1) Resistencia a la Tensión, ASTM D 1457 - 19 MPa. mín.

(2) Alargamiento, ASTM D 1457 - 200% mín.

(e) Lámina de TFE Rellenada.- Suministrar lámina de TFE rellenada hecha de resina de TFE uniformemente mezclada con material de relleno. Las láminas de TFE rellenadas que contengan fibra de vidrio o carbón, deberán cumplir con lo mostrado en el Cuadro 1017-3.

CUADRO 1017-3
LÁMINAS DE TETRAFLUORETANO RELLENADAS

Propiedad	Método ASTM	15% de Fibras de Vidrio	25% de Carbón
Mecánicas:			
Resistencia Mínima a la Tensión	D 1457	14 MPa.	9 MPa.
Alargamiento Mínimo	D 1457	150%	75%
Físicas :			
Gravedad Específica Mínima	D 792	2.20	2.10
Punto de Fusión	D 1457	327 ± 10°C	327 ± 10°C

(f) Tela con Fibras de TFE.- Suministrar tela hecha de fluorocarbono oriental de TFE multifilamentoso y otras fibras. Usar fibras de TFE que cumplan con lo siguiente:

(1) Resistencia a la Tensión, ASTM D 2256 - 165 MPa. mín.

(2) Alargamiento, ASTM D 2256 - 75% mín.

(g) Componentes de TFE Rellenado y Bronce Entrelazados.- Suministrar una plancha de bronce fosforado que cumpla con ASTM B 100 con una capa superficial de bronce poroso de

0.25 mm de espesor que cumpla con ASTM B 103 M, en la cual es impregnado un compuesto de TFE. Cubrir la superficie con una carpeta de un compuesto de TFE de no menos de 25 µm de espesor.

(h) Mixtura de Metal y TFE.- Suministrar TFE virgen moldeado en cada lado y completamente a través de una lámina de acero inoxidable perforada de 33 mm de espesor que cumpla con ASTM A 240, tipo 304.

(i) Tratamiento Superficial de Láminas.- Para pegar con epóxico, tratar en fábrica un lado de la lámina de TFE con un proceso de naftalina de sodio o amoniaco sódico.

(j) Superficies en Contacto con Acero Inoxidable.- Cumplir con lo siguiente:

(1) Espesor 0.91 mm. mín.

(2) Acabado de la Superficie 0.5 µm. raíz cuadrada de la media de los cuadrados, máx.

Pulir o rodillar las superficies que estarán en contacto con acero inoxidable para cumplir con las propiedades de fricción especificadas.

PRESUPUESTO

ÍNDICE

Página

1. MEDICIONES 5
2. HOJA DE MEDICIÓN ACERO 11
3. CUADRO DE PRECIOS Nº1 15
4. PRESUPUESTO 19
5. RESUMEN DE PRESUPUESTO 21

1. MEDICIONES

ETAPA	SUB ETAPA		RESUMEN	UDS	LON	ANC	ALT	PARCIAL	TOTAL
ETAPA 205: PRELIMINARES									
205	**01**		**Construcciones temporales (campamento)**						
		m²	Champa de madera blanca, ilcluso embaldosado y techo de lámina de zinc, para oficina galerón cerrado						
			Área de la champa	2	4.00	4.00		32.00	
									32.00
		m²	Champa de madera de pino, incluso embaldosado y techo de lámina de zinc para bodega galerón cerrado y tambo						
			Área de la champa	3	6.00	5.00		90.00	
									90.00
205	**04**		**Construccion de obras preliminares**						
		m³	Concreto de 3000 PSI con mezcladora	1	64.00	6.00	0.10	38.40	
									38.40
		m	Alcantarilla de tubería perfilada de PVC de diámetro 78"						
			Alcantarilla para desague del cauce	6		6.00		36.00	
									36.00
		m²	Formaleta para muros						
			Longitudinales	2	64.00	2.20		281.60	
									281.60
		LBS	Hierro en varillas corrugado de grado 60 de diámetro superior al Nº4						
			Ver hoja de medición acero						
		m³	Concreto de 4500 PSI con mezcladora						
			Volumen de la base	1	64.00	6.00	2.20	844.80	
			A deducir alcantarillas	-1				-113.10	
									731.70
205	**05**		**Rótulos**						
		C/U	Rótulo de 1.22 x 2.44 m de estructura metálica y zinc liso, con bases de concreto reforzado						
			Rótulos	2				2.00	
									2
205	**06**		**Remoción de estructuras de concreto**						
		m³	Demolición con retroexcavadora y martillo hidraúlico a cielo abierto de estructura de concreto						
			Volumen puente vado	1				809.84	
			Volumen base cimbra	1				731.71	
									1541.55
ETAPA 207: SUB-ESTRUCTURA PARA PUENTE									
207	**01**		**Limpieza inicial**						
		C/U	Eliminar con motosierra árbol existente de diámetro de 8", considerando una densidad de 0,3 árboles/m²						
			Área estribo derecho	1	7.87	34.89		274.58	
			Número total de árboles						**82**
		C/U	Eliminar con machete árboles existentes de diámetro menos de 4", considerando una densidad de 0,1 árboles/m²						
			Área estribo izquierdo	1	72.13	34.89		2516.62	
			Número total de árboles						**126**
		m²	Descapote con motoniveladora en terreno limo-arcilloso						
			Área de descapote estribo derecho	1	25.71	34.89		897.02	
			Área de descapote estribo izquierdo	1	96.69	34.89		3373.51	
									4270.53
207	**03**		**Excavación principal**						
		m³	Excavación con retroexcavadora para estructura de fundaciones de puente en terreno de material mixto de arcillas, limos y bolones						
			Volumen limos y bolones	1				10968.79	
									10968.79

		m³	Excavación con retroexcavadora y martillo hidráulico a cielo abierto en roca						
			Volumen roca	1			2221.76		
								2221.76	
207	**18**		**Acarreos**						
		m³	Botar con camión volquete tierra sobrante de excavación a 7.5 km incluido carga con equipo						
			Volumen de transporte terreno flojo (esp 20%)	1			5349.31		
			Volumen de transporte roca (esp 40%)	1			2761.96		
								8111.27	
			PILOTES						
207	**07**		**Perforación**						
		m	Perforación para pilote con máquina rotativa en terreno de formación consolidada						
			Pila 4	4		9.08	36.32		
			Pila 5	4		9.87	39.48		
			Pila 6	4		10.66	42.64		
			Pila 7	4		11.44	45.76		
			Pila 8	4		12.23	48.92		
			Estribo 2	8		17.67	141.36		
								354.48	
207	**14**		**Acero de refuerzo principal**						
		LBS	Hierro en varillas corrugado de grado 60 de diámetro superior al Nº4						
			Ver hoja de medición acero						
207	**16**		**Concreto estructural**						
		m³	Concreto de 4500 PSI con mezcladora						
			Pila 4	4	1.00	1.00	9.08	28.53	
			Pila 5	4	1.00	1.00	9.87	31.01	
			Pila 6	4	1.00	1.00	10.66	33.49	
			Pila 7	4	1.00	1.00	11.44	35.94	
			Pila 8	4	1.00	1.00	12.23	38.42	
			Estribo 2	4	1.00	1.00	17.67	55.51	
								222.90	
			ZAPATAS						

207	**02**		**Concreto de limpieza en fondo de cimentación (nivelación)**						
		m³	Concreto de 3000 PSI con mezcladora						
			Volumen bajo zapatas de 7 a 11	5	5.00	5.00	0.10	12.50	
			Volumen bajo zapatas estribo 1 y zapata pila 6	2	5.00	7.00	0.10	7.00	
			Volumen bajo zapata estribo 2	1	5.00	11.90	0.10	5.95	
									25.45
207	**15**		**Formaletas**						
		m²	Formaleta para fundaciones						
			Zapatas de 7 a 11						
			Formaletas transversales	10		5.00	1.75	87.50	
			Formaletas longitudinales	10	5.00		1.75	87.50	
			Zapatas estribo 1 y pila 6						
			Formaletas transversales verticales exteriores	2		7.00	4.00	56.00	
			Formaletas transversales verticales interiores	2		7.00	2.00	28.00	
			Formaletas transversales inclinadas	2		7.00	2.33	32.62	
			Formaletas longitudinales	4	5.00		4.00	75.20	
			Zapata estribo 2						
			Formaletas transversales	2		11.90	1.75	41.65	
			Formaletas longitudinales	2	5.00		1.75	17.50	
									425.97
207	**14**		**Acero de refuerzo principal**						
		LBS	Hierro en varillas corrugado de grado 60 de diámetro superior al Nº4						
			Ver hoja de medición acero						
207	**16**		**Concreto estructural**						
		m³	Concreto de 4500 PSI con mezcladora						
			Zapatas de 7 a 11	5	5.00	5.00	1.75	218.75	
			Zapatas estribo 1 y pila 6	2	5.00	7.00	4.00	263.20	
			Zapata estribo 2	1	5.00	11.90	1.75	104.13	
									586.08
			ESTRIBOS						
207	**15**		**Formaletas**						

m² Formaleta para fundaciones

Estribo 1

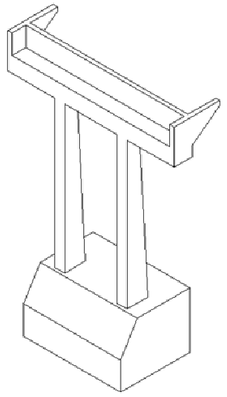

Frontal pilas	2		0.70	10.47	14.66
Lateral pilas	4	1.20		10.47	50.26
Trasero pilas	2		0.70	10.49	14.69
Apoyo inferior	1	1.30	11.90		15.47
A deducir huecos pilas	-2	0.90	0.70		-1.26
Frontal apoyo	1		11.90	2.44	29.04
Interior apoyo	2	1.00		1.28	2.56
Laterales apoyo	2	1.30		2.28	5.93
Lateral aletas	4	2.00		1.04	8.32
A deducir contacto ménsula	-2	0.30		0.40	-0.24
Frontal aletas	2		0.30	0.30	0.18
Frontal aletas inclinado	2		0.30	2.49	1.49
Trasero apoyo	1		11.30	0.38	4.29
	1		11.30	0.85	9.61
	1		11.90	0.60	7.14
Ménsula	1		11.30	0.25	2.83
	1		11.30	0.42	4.75

Estribo 2

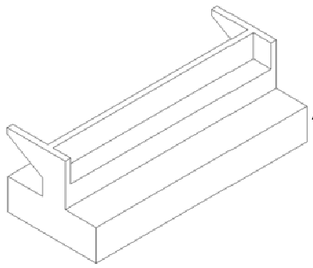

Frontal apoyo	1		11.90	2.44	29.04
Interior apoyo	2	1.00		1.28	2.56
Laterales apoyo	2	1.30		2.28	5.93
Lateral aletas	4	2.00		1.04	8.32
A deducir contacto ménsula	-2	0.30		0.40	-0.24
Frontal aletas	2		0.30	0.30	0.18
Frontal aletas inclinado	2		0.30	2.49	1.49
Trasero apoyo	1		11.30	0.38	4.29
	1		11.30	0.85	9.61
	1		11.90	0.60	7.14
Ménsula	1		11.30	0.25	2.83
	1		11.30	0.42	4.75

245.62

207	**14**		**Acero de refuerzo principal**
		LBS	Hierro en varillas corrugado de grado 60 de diámetro superior al Nº4
			Ver hoja de medición acero

207	**16**		**Concreto estructural**
		m³	Concreto de 4500 PSI con mezcladora

Estribo 1

Pilas	2	1.20	0.70	10.47	17.59
Apoyo	1	1.30	11.90	2.44	37.75
A deducir hueco tablero	-1	1.00	11.30	1.34	-15.14
Aletas	2	2.00	0.30	1.04	1.25
Ménsula	1	0.30	11.30	0.40	1.36

Esrtibo 2

Muro	1	1.30	11.90	2.44	37.75
A deducir hueco tablero	-1	1.00	11.30	1.34	-15.14
Aletas	2	2.00	0.30	1.04	1.25
Ménsula	1	0.30	11.30	0.42	1.42

68.09

211	**05**		**Aparato de apoyo**
		C/U	Apoyo movil para puente
			Apoyos en estribos 4 — 4

4

			ZAPATAS Y ESTRIBOS
207	**19**		**Explotación de banco**
		m³	Acarreo con camión volquete de material selecto a 10 km carga con equipo, incluido derecho de explotación

Volumen de relleno (compactado) 13190.55

A deducir:

Volumen zapatas 7 a 11	-4	5.00	5.00	1.75	-175.00
Volumen estribo 1	-1				-42.81
Volumen zapata pila 6 y estribo 1	-2	5.00	7.00	4.00	-263.20
Volumen pila 6	-1	1.00	3.00	2.94	-8.82
Volumen pila 7	-1	1.00	3.00	0.74	-2.22
Volumen pila 8	-1	1.00	3.00	1.61	-4.83
Volumen pila 9	-1	1.00	3.00	2.57	-7.71
Volumen pila 10	-1	1.00	3.00	3.65	-10.95
Volumen pila 11	-1	1.00	3.00	4.46	-13.38
Volumen extremo derecho arco	-1	11.17	5.34	1.00	-59.65
Volumen extremo izquierdo arco	-1	5.64	5.68	1.00	-32.04

Aumento por esponjamiento y compactación 3307.88

15877.82

m³ Relleno y compactación con vibrocompactadora manual

Volumen de relleno (compactado) 12569.94

									12569.94

ETAPA 211: SUPER ESTRUCTURA PARA PUENTE

			CIMBRA						
211	**05**		**Cimbra cuajada para encofrado de pilas inclinadas y tablero**						
		m³	Cimbra con puntales, para sujección del encofrado de pilas inclinadas y tablero, incluido transporte, montaje y desmontaje						
			Volumen cimbra	1				5945.65	
									5945.65
			ARCO						
211	**09**		**Formaletas**						
		m²	Formaletas de madera blanca para puente vehicular						
			Superficie inferior	1	90.62	4.50		407.79	
			Superficie lateral	2	91.16		1.00	182.32	
									590.11
211	**08**		**Acero de refuerzo principal**						
		LBS	Hierro en varillas corrugado de grado 60 de diámetro superior al Nº4						
			Ver hoja de medición de acero						
211	**16**		**Concreto estructural**						
		m³	Concreto de 4500 PSI con mezcladora						
			Volumen arco	2	45.58	4.50	1.00	410.22	
									410.22

			PILAS						
211	**09**		**Formaletas**						
		m²	Formaletas para columnas (área de contacto)						
			Pilas 1 y 5						
			Caras longitudinales	4	1.00		5.95	23.80	
			Caras transversales	4		3.00	5.95	71.40	
			Pilas 2 y 4						
			Caras longitudinales	4	1.00		2.10	8.40	
			Caras transversales	4		3.00	2.10	25.20	
			Pila 3						
			Caras longitudinales	2	1.00		0.85	1.70	
			Caras transversales	2		3.00	0.85	5.10	
			Pila 6						
			Caras longitudinales	2	1.00		11.57	23.14	
			Caras transversales	2		3.00	11.57	69.42	
			Pilas de la 7 a la 11						
			Caras longitudinales	10	1.00		6.00	60.00	
			Caras transversales	10		3.00	6.00	180.00	
									468.16
211	**08**		**Acero de refuerzo principal en pilas**						
		LBS	Hierro en varillas corrugado de grado 60 de diámetro superior al Nº4						
			Ver hoja de medición de acero						
211	**16**		**Concreto estructural**						
		m³	Concreto de 4500 PSI con mezcladora						
			Pilas 1 y 5	2	1.00	3.00	5.95	35.70	
			Pilas 2 y 4	2	1.00	3.00	2.10	12.60	
			Pila 3	1	1.00	3.00	0.85	2.55	
			Pila 6	1	1.00	3.00	11.57	34.71	
			Pilas de la 7 a la 11	5	1.00	3.00	6.00	90.00	
									175.56
211	**05**		**Aparato de apoyo**						
		C/U	Apoyo movil para puente						
			Apoyos en pilas	22				22	
									22

			TABLERO						
211	**09**		**Formaletas en tablero**						
		m²	Formaletas de madera blanca para puente vehicular						
			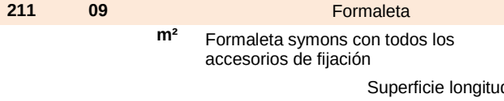						
			S1	2	175.00		0.20	70.00	
			S2	2	175.00	2.01		703.50	
			S3	2	175.00		0.92	322.00	
			S4	1	175.00	5.90		1032.50	
			A deducir contacto apoyos	-26	0.80	0.80		-16.64	
									2111.36
211	**08**		**Acero de refuerzo principal en tablero**						
		LBS	Hierro en varillas corrugado de grado 60 de diámetro superior al Nº4						
			Ver hoja de medición de acero						
211	**16**		**Concreto estructural en tablero**						
		m³	Concreto de 4500 PSI con mezcladora						
			Volumen tablero	1	175.00	8.44		1477.00	
									1477.00
211	**05**		**Otro tipo de obras**						
		m²	Tela asfáltica para impermeabilización de tablero	2	175.00	5.00		1750.00	
									1750.00
211	**05**		**Otro tipo de obras**						
		C/U	Sumideros	24				24.00	
									24.00
211	**05**		**Otro tipo de obras**						
		m	Baranda de tubo redondo de Ho. Go. Diámetro=8" y altura=0.90m, ilcluida pintura anticorrosiva	2	175.00			350.00	
									350.00
			PAVIMENTO						
211	**09**		Formaleta						
		m²	Formaleta symons con todos los accesorios de fijación						
			Superficie longitudinal	2	175.00		0.15	52.50	
			Superficie transversal	4		5.00	0.15	3.00	
									55.50

211	**08**		Acero de refuerzo principal						
		LBS	Hierro en varillas corrugado de grado 60 de diámetro superior al Nº4						
			Ver hoja de medición de acero						
211	**16**		Concreto estructural						
		m³	Concreto de 4500 PSI con mezcladora						
			Volumen firme	2	175.00	5.00	0.15	262.50	
									262.50
			LOSA DE TRANSICIÓN						
211	**02**		**Concreto de limpieza en fondo de losas de transición (nivelación)**						
		m³	Concreto de 3000 PSI con mezcladora	2	5.00	11.30	0.10	11.30	
									11.30
211	**09**		**Formaletas en losas de transición**						
		m²	Formaleta symons con todos los accesorios de fijación						
			Superficie lateral	4	5.00		0.30	6.00	
				4		11.30	0.30	13.56	
									19.56
211	**08**		**Acero de refuerzo principal en losa de transición**						
		LBS	Hierro en varillas corrugado de grado 60 de diámetro superior al Nº4						
			Ver hoja de medición de acero						
211	**16**		**Concreto estructural en losa de transición**						
		m³	Concreto de 4500 PSI con mezcladora						
			Volumen	2	5.00	11.30	0.30	33.90	
									33.90

ETAPA 213: SEÑALIZACIÓN HORIZONTAL Y VERTICAL

213	**01**		**Señales de información**				
		C/U	Señal informativa estandar con paral de acero con base de concreto de 3000 PSI, incluida excavación				
			Señales informativas	4		4.00	
							4.00
213	**02**		**Señales de reglamentación**				
		m	Señalización horizontal pintada con equipo				
			Total	1	175.00	175.00	
							175.00
213	**03**		**Señales de prevención**				
		C/U	Señal de tránsito de prevención estandar				
			Señales de tránsito	2		2.00	
							2.00

ETAPA 214: MEDIDAS DE MITIGACIÓN Y PREVENCIÓN DE ACCIDENTES

214	**01**		**Anejo Nº14: Estudio de Seguridad y Salud**				
		GLB	Anejo Nº14: Estudio de Seguridad y Salud				
			Presupuestos anteriores				**1.00**

ETAPA 217: PRUEBA DE CARGA

217	**01**		**Anejo Nº9: Cálculos estructurales**				
			Prueba de carga				
			Presupuestos anteriores				**1.00**

ETAPA 218: CONTROL DE CALIDAD

217	**01**		**Anejo Nº15: Control de calidad**				
			Valoración de los ensayos				
			Presupuestos anteriores				**1.00**

2. HOJA DE MEDICIÓN ACERO

ETAPA	SUBETAPA	RESUMEN		N	LON	PESO/M	PARCIAL	TOTAL	
ETAPA 205: PRELIMINARES									
205	**04**	**Construccion de obras preliminares (base cimbra)**							
	LBS	Hierro en varillas corrugado de grado 60 de diámetro superior al Nº4							
			Longitudinal	155	12	0.994	1848.84		
				31	6.67	0.994	205.53		
			Transversales	321	5.92	0.994	1888.92		
		Aumento del 5% por pérdidas, despuntes y tolerancias					197.16		
								4140.45	**kg**
								9128.04	**lbs**
ETAPA 207: SUB-ESTRUCTURA PARA PUENTE									
		PILOTES							
207	**14**	**Acero de refuerzo principal**							
	LBS	Hierro en varillas corrugado de grado 60 de diámetro superior al Nº4							
		Armadura vertical							
			Pila 7	60	10.88	3.973	2593.57		
			Pila 8	60	11.67	3.973	2781.89		
			Pila 9	60	12.00	3.973	2860.56		
				60	1.86	3.973	443.39		
			Pila 10	60	12.00	3.973	2860.56		
				60	2.64	3.973	629.32		
			Pila 11	60	12.00	3.973	2860.56		
				60	3.43	3.973	817.64		
			Estribo 2	120	12.00	3.973	5721.12		
				120	8.87	3.973	4228.86		
		Cercos							
			Pila 7	212	2.58	0.994	543.68		
			Pila 8	228	2.58	0.994	584.71		
			Pila 9	244	2.58	0.994	625.74		
			Pila 10	260	2.58	0.994	666.78		
			Pila 11	276	2.58	0.994	707.81		
			Estribo 2	1064	2.58	0.994	2728.65		
		Aumento del 5% por pérdidas, despuntes y tolerancias					1582.74		
								33237.58	**kg**
								73275.57	**lbs**

		ZAPATAS							
207	**14**	**Acero de refuerzo principal**							
	LBS	Hierro en varillas corrugado de grado 60 de diámetro superior al Nº4							
		Zapatas de 7 a 11							
		Viga de atado							
			Armadura inferior	260	5.15	3.973	5319.85		
			Laterales	80	7.83	3.973	2488.69		
			Cercos	680	6.06	2.235	9209.99		
		Zapata							
			Armadura longitudinal inferior	170	7.76	2.235	2948.41		
			Armadura longitudinal superior	90	7.76	0.994	694.21		
			Armadura transversal inferior	105	7.76	2.235	1821.08		
			Armadura transversal superior	90	7.76	0.994	694.21		
		Zapatas estribo 1 y pila 6							
		Armadura longitudinal							
			Armadura longitudinal inferior	136	10.44	6.404	9092.66		
			Armadura longitudinal superior	136	11.52	6.404	10033.27		
		Armadura transversal inferior							
			Tramo horizontal	74	12	6.404	5686.75		
				74	4.8	6.404	2274.70		
			Tramo inclinado	44	12	6.404	3381.31		
		Armadura transversal superior							
			Tramo horizontal	74	12	6.404	5686.75		
				74	4.84	6.404	2293.66		
			Tramo inclinado	44	12	6.404	3381.31		
		Laterales horizontales laterales							
			Plano vertical	40	5.62	3.042	683.84		
			Plano inclinado	40	5.02	3.042	610.83		
		Laterales horizontales frontales		40	7.62	3.042	927.20		
		Refuerzos							
		Parrilla superior							
			Transversales	22	6.81	3.042	455.75		
			Longitudinales	38	3.86	3.042	446.20		
		Parrila intermedia							
			Transversales	18	6.81	3.042	372.89		
			Longitudinales	38	3.15	3.042	364.13		
		Parrila inferior							
			Transversales	14	6.81	3.042	290.02		
			Longitudinales	38	2.48	3.042	286.68		

Zapata estribo 2							
Viga de atado							
Armadura longitudinal inferior	60	5.31	6.404	2040.31			
Armadura longitudinal superior	28	5.31	6.404	952.15			
Cercos	136	5.32	0.994	719.18			
Zapata							
Armadura longitudinal inferior	27	5.3	3.973	568.54			
Armadura longitudinal superior	27	5.3	3.973	568.54			
Armadura transversal inferior	20	12	3.973	953.52			
Armadura transversal superior	20	12	3.973	953.52			
Aumento del 5% por pérdidas, despuntes y tolerancias				3810.01			
					80010.16	**kg**	
					176390.40	**lbs**	

		ESTRIBOS					
207	**14**	**Acero de refuerzo principal**					
	LBS	Hierro en varillas corrugado de grado 60 de diámetro superior al Nº4					
Estribo 1							
Pilas							
Esperas zapata	79	7.09	6.404	3586.94			
Armadura vertical frontal	52	12	6.404	3996.10			
Armadura vertical lateral	20	12	6.404	1536.96			
Cercos	92	2.64	2.235	542.84			
Apoyo							
Esperas	12	2.90	3.042	105.86			
Armadura inferior longitudinal	39	2.53	3.042	300.15			
Armadura superior longitudinal	39	2.14	3.042	253.89			
Armadura transversal superior	30	12.00	3.042	1095.12			
Armadura espalda delantero	39	2.71	3.042	321.51			
Armadura espalda trasero	39	2.71	3.042	321.51			
Refuerzo ménsula	113	1.64	0.994	184.21			
Espera losa de transición	29	0.68	3.973	78.35			
Refuerzo en apoyos							
Parrillas	96	0.80	0.994	76.34			
Grapas	8	1.10	0.994	8.75			
Extremos							
Aletas							
Laterales	8	6.26	3.042	152.34			
Cercos horizontales	10	3.66	2.235	81.80			
Cercos verticales	16	2.38	2.235	85.11			
Muro del apoyo							
Laterales	8	4.35	3.042	105.86			
Cercos horizontales	10	2.76	2.235	61.69			
Cercos verticales	6	2.84	2.235	38.08			
Estribo 2							
Apoyo							
Esperas	78	2.90	3.042	688.10			
Armadura inferior longitudinal	39	2.53	3.042	300.15			
Armadura superior longitudinal	39	2.14	3.042	253.89			
Armadura transversal superior	30	12.00	3.042	1095.12			
Armadura espalda delantero	39	2.71	3.042	321.51			
Armadura espalda trasero	39	2.71	3.042	321.51			
Refuerzo ménsula	113	1.64	0.994	184.21			
Espera losa de transición	29	0.68	3.973	78.35			
Refuerzo en apoyos							
Parrillas	96	0.80	0.994	76.34			
Grapas	8	1.10	0.994	8.75			
Extremos							
Aletas							
Laterales	8	6.26	3.042	152.34			
Cercos horizontales	10	3.66	2.235	81.80			
Cercos verticales	16	2.38	2.235	85.11			
Muro del apoyo							
Laterales	8	4.35	3.042	105.86			
Cercos horizontales	10	2.76	2.235	61.69			
Cercos verticales	6	2.84	2.235	38.08			
Aumento del 5% por pérdidas, despuntes y tolerancias				839.31			
					17625.53	**kg**	
					38857.24	**lbs**	

ETAPA 211: SUPER ESTRUCTURA PARA PUENTE							
		ARCO					
211	**08**	**Acero de refuerzo principal**					
	LBS	Hierro en varillas corrugado de grado 60 de diámetro superior al Nº4					
Laterales							
Esperas	72	9.2	6.404	4242.01			
Intermedias	288	12	6.404	22132.22			
Solape en la clave	72	2.4	6.404	1106.61			
Longitudinales							

Esperas inferiores y superiores	80	9.2	6.404	4713.34	
Tramo 1	80	9.2	6.404	4713.34	
Tramo 2	120	12	6.404	9221.76	
Tramo 3	48	12	6.404	3688.70	
Solape	48	2.4	6.404	737.74	
Armadura cortante					
Verticales					
Tramo 1	1104	1.1	2.235	2714.18	
Tramo 2	1008	1.1	2.235	2478.17	
Tramo 3	432	1.1	2.235	1062.07	
Horizontales	1040	4.57	2.235	10622.51	
Aumento del 5% por pérdidas, despuntes y tolerancias				3371.63	
				70804.28	**kg**
				156095.12	**lbs**

		PILAS	
211	**08**	**Acero de refuerzo principal**	
	LBS	Hierro en varillas corrugado de grado 60 de diámetro superior al Nº4	

Pilas 1 y 5

Verticales	92	8.39	3.973	3066.68
Cercos	78	3.42	2.235	596.21
	52	7.58	2.235	880.95
Parrillas	80	0.91	0.994	72.36
	32	2.84	0.994	90.33
Refuerzo apoyo	16	1.1	0.994	17.49

Pilas 2 y 4

Verticales	92	4.54	3.973	1659.44
Cercos	30	3.42	2.235	229.31
	20	7.58	2.235	338.83
Parrillas	80	0.91	0.994	72.36
	32	2.84	0.994	90.33
Reuerzo apoyo	16	1.1	0.994	17.49

Pila 3

Verticales	46	3.28	3.973	599.45
Cercos	6	3.42	2.235	45.86
	4	7.58	2.235	67.77
Parrillas	40	0.91	0.994	36.18
	16	2.84	0.994	45.17
Refuerzo apoyo	8	1.1	0.994	8.75

Pila 6

Esperas	64	7.09	6.404	2905.88
	18	7.09	3.973	507.03
Verticales	64	12	6.404	4918.27
	18	12	3.973	858.17
Cercos	75	3.42	2.235	573.28
	50	7.58	2.235	847.07
Parrillas	40	0.91	0.994	36.18
	16	2.84	0.994	45.17
Refuerzo apoyo	8	1.1	0.994	8.75

Pilas de la 7 a la 11

Esperas	230	3.7	3.973	3381.02
Verticales	230	4.76	3.973	4349.64
Cercos	180	3.42	2.235	1375.87
	120	7.58	2.235	2032.96
Parrillas	200	0.91	0.994	180.91
	80	2.84	0.994	225.84
Refuerzo apoyo	40	1.1	0.994	43.74
Aumento del 5% por pérdidas, despuntes y tolerancias				1511.24
				31735.98 **kg**
				69965.14 **lbs**

		TABLERO	
211	**08**	**Acero de refuerzo principal en tablero**	
	LBS	Hierro en varillas corrugado de grado 60 de diámetro superior al Nº4	

Armadura cortante

Tipo 1	584	8.5	2.235	11094.54
Tipo 4	1168	2.56	2.235	6682.83
Tipo 6	584	11.3	2.235	14749.21

Cercos

Tipo 8	4088	2.98	2.235	27227.31

Armadura longitudinal

Tipo 2	30	11.75	3.973	1400.48
	30	12	3.973	1430.28
	30	9	3.973	1072.71
Tipo 7	57	11.75	3.973	2660.92
	57	12	3.973	2717.53
	57	9	3.973	2038.15
Tipo 3	6	11.75	2.235	157.57
	6	12	2.235	160.92

				6	9	2.235	120.69		
			Tipo 5	18	11.75	2.235	472.70		
				18	12	2.235	482.76		
				18	9	2.235	362.07		
			Refuerzo						
			Tipo 2	319	12	3.973	15208.64		
				29	6	3.973	691.30		
			Aumento del 5% por pérdidas, despuntes y tolerancias				4436.53		
								93167.14	**kg**
								205396.28	**lbs**
			PAVIMENTO						
211	**08**		**Acero de refuerzo principal en losas de transición**						
		LBS	Hierro en varillas corrugado de grado 60 de diámetro superior al Nº4						
			Barras longitudinales	714	12.00	2.235	19149.48		
				51	6.92	2.235	788.78		
			Barras transversales	1752	5.00	2.235	19578.60		
			Aumento del 5% por pérdidas, despuntes y tolerancias				1975.84		
								41492.70	**kg**
								91474.81	**lbs**
			LOSA DE TRANSICIÓN						
211	**08**		**Acero de refuerzo principal en losas de transición**						
		LBS	Hierro en varillas corrugado de grado 60 de diámetro superior al Nº4						
			Armadura longitudinal inferior	114	5.26	3.042	1824.10		
			Armadura longitudinal superior	114	5.23	0.994	592.64		
			Armadura transversal	100	11.56	0.994	1149.06		
			Aumento del 5% por pérdidas, despuntes y tolerancias				178.29		
								3744.09	**kg**
								8254.22	**lbs**

3. CUADRO DE PRECIOS Nº1

ETAPA	SUBETAPA		RESUMEN	PRECIO
ETAPA 205: PRELIMINARES				
205	**01**		**Construcciones temporales (campamento)**	
		m²	Champa de madera blanca, ilcluso embaldosado y techo de lámina de zinc, para oficina galerón cerrado.	
			SESENTA Y OCHO MIL NOVECIENTOS SETENTA Y NUEVE CÓRDOBAS	**68979.00**
		m²	Champa de madera de pino, incluso embaldosado y techo de lámina de zinc para bodega galerón cerrado y tambo.	
			DOSCIENTOS CUATRO MIL SEISCIENTOS CINCUENTA Y CUATRO CÓRDOBAS CON VEINTIOCHO CENTAVOS	**204654.28**
205	**04**		**Construccion de obras preliminares**	
		m³	Concreto de 3000 PSI con mezcladora	
			CIENTO CINCUENTA Y CUATRO MIL NOVECIENTOS CINCUENTA CÓRDOBAS CON OCHENTA Y SEIS CENTAVOS	**154950.86**
		m	Alcantarilla de tubería perfilada de PVC de diámetro 78".	
			SEISCIENTOS SESENTA Y CINCO MIL SEISCIENTOS TREINTA Y CINCO CÓRDOBAS CON SIETE CENTAVOS	**665635.07**
		m²	Formaleta para muros.	
			NOVENTA Y SEIS MIL CIENTO SESENTA Y UN CÓRDOBAS CON TRECE CENTAVOS	**96161.13**
		LBS	Hierro en varillas corrugado de grado 60 de diámetro superior al Nº4	
			DOSCIENTOS SESENTA Y CINCO MIL SEISCIENTOS TREINTA Y TRES CÓRDOBAS CON VEINTISIETE CENTAVOS	**265633.27**
		m³	Concreto de 4500 PSI con mezcladora	
			TRES MILLONES CUATROCIENTOS OCHENTA Y OCHO MIL SETECIENTOS OCHENTA Y SEIS CÓRDOBAS CON CATORCE CENTAVOS	**3488786.14**
205	**05**		**Rótulos**	
		C/U	Rótulo de 1.22 x 2.44 m de estructura metálica y zinc liso, con bases de concreto reforzado.	
			VEINTISIETE MIL CIENTO NOVENTA Y CINCO CÓRDOBAS CON OCHENTA Y SEIS CENTAVOS	**27195.86**
205	**06**		**Remoción de estructuras de concreto**	
		m³	Demolición con retroexcavadora y martillo hidráulico a cielo abierto de estructura de concreto	
			TRESCIENTOS NOVENTA MIL SETECIENTOS DOCE CÓRDOBAS CON SETENTA Y OCHO CENTAVOS	**390712.78**
ETAPA 207: SUB-ESTRUCTURA PARA PUENTE				
207	**01**		**Limpieza inicial**	
		C/U	Eliminar con motosierra árbol existente de diámetro de 8", considerando una densidad de 0,3 árboles/m²	
			SESENTA Y SEIS MIL CUARENTA Y SEIS CÓRDOBAS CON NOVENTA Y SIETE CENTAVOS	**66046.97**
		C/U	Eliminar con machete árboles existentes de diámetro menos de 4", considerando una densidad de 0,1 árboles/m²	
			DIECISEISMIL SETECIENTOS CUARENTA Y CUATRO CON OCHENTA Y TRES CENTAVOS	**16744.83**
		m²	Descapote con motoniveladora en terreno limo-arcilloso	
			TREINTA Y OCHO MIL NOVECIENTOS DOCE CÓRDOBAS CON SESENTA Y CUATRO CENTAVOS	**38912.64**
207	**03**		**Excavación principal**	
		m³	Excavación con retroexcavadora para estructura de fundaciones de puente en terreno de material mixto de arcillas, limos y bolones.	
			TRES MILLONES OCHOCIENTOS NOVENTA Y TRES MIL CUATROCIENTOS TREINTA Y UN CÓRDOBAS CON VEINTICUATRO CENTAVOS	**3893431.24**
		m³	Excavación con retroexcavadora y martillo hidráulico a cielo abierto en roca.	
			QUINIENTOS SESENTA Y TRES MIL CIENTO QUINCE CÓRDOBAS CON SIETE CENTAVOS	**563115.07**
207	**18**		**Acarreos**	
		m³	Botar con camión volquete tierra sobrante de excavación a 7.5 km incluido carga con equipo	
			UN MILLÓN NOVECIENTOS VEINTISEIS MIL CIENTO ONCE CÓRDOBAS CON NOVENTA Y UN CENTAVOS	**1926111.91**
			PILOTES	
207	**07**		**Perforación**	
		m	Perforación para pilote con máquina rotativa en terreno de formación consolidada	
			QUINIENTOS TRES MIL CIENTO VEINTISEIS CÓRDOBASCON SESENTA Y OCHO CENTAVOS	**530126.68**

207	14		**Acero de refuerzo principal**	
		LBS	Hierro en varillas corrugado de grado 60 de diámetro superior al Nº4	
			DOS MILLONES CIENTO TREINTA Y DOS MIL TRESCIENTOS SETENTA Y SIETE CÓRDOBAS CON SETENTA Y UN CENTAVOS	**2132377.71**
207	16		**Concreto estructural**	
		m³	Concreto de 4500 PSI con mezcladora	
			UN MILLÓN SESENTA Y DOS MIL SETECIENTOS NOVENTA Y NUEVE CÓRDOBAS CON CINCUENTA Y CINCO CENTAVOS	**1062799.55**
			ZAPATAS	
207	**02**		**Concreto de limpieza en fondo de cimentación (nivelación)**	
		m³	Concreto de 3000 PSI con mezcladora	
			CIENTO DOS MIL SEISCIENTOS NOVENTA Y CINCO CÓRDOBAS CON TREINTA CENTAVOS	**102695.30**
207	**15**		**Formaletas**	
		m²	Formaleta para fundaciones	
			CIENTO OCHENTA Y CONCO MIL SEISCIENTOS SESENTA Y SEIS CÓRDOBAS CON SETENTA Y OCHO CENTAVOS	**185666.78**
207	**14**		**Acero de refuerzo principal**	
		LBS	Hierro en varillas corrugado de grado 60 de diámetro superior al Nº4	
			CINCO MILLONES CIENTO TREINTA Y TRES MIL CIENTO UN CÓRDOBAS CON SETENTA Y CINCO CENTAVOS	**5133101.75**
207	**16**		**Concreto estructural**	
		m³	Concreto de 4500 PSI con mezcladora	
			DOS MILLONES SETECIENTOS NOVENTA Y CUATRO MIL CUATROCIENTOS SESENTA Y UN CÓRDOBAS CON NOVENTA Y UN CENTAVOS	**2794461.91**
			ESTRIBOS	
207	**15**		**Formaletas**	
		m²	Formaleta para fundaciones	
			CIENTO SIETE MIL CINCUENTA Y SIETE CÓRDOBAS CON NOVENTA Y CONCO CENTAVOS	**107057.95**
207	**14**		**Acero de refuerzo principal**	
		LBS	Hierro en varillas corrugado de grado 60 de diámetro superior al Nº4	
			UN MILLÓN CIENTO TREINTA MIL SETECIENTOS SETENTA Y SEIS CÓRDOBAS CON SETENTA Y SIETE CENTAVOS	**1130776.77**
207	**16**		**Concreto estructural**	
		m³	Concreto de 4500 PSI con mezcladora	
			TRESCIENTOS VEINTI CUATRO MIL SEISCIENTOS CINCUENTA Y SEIS CÓRDOBAS CON OCHENTA Y NUEVE CENTAVOS	**324656.89**
211	**05**		**Aparato de apoyo**	
		C/U	Apoyo movil para puente	
			CUARENTA Y UN MIL QUINIENTOS NOVENTA Y TRES CÓRDOBAS CON NOVENTA Y TRES CENTAVOS	**41593.93**
			ZAPATAS Y ESTRIBOS	
207	**19**		**Explotación de banco**	
		m³	Acarreo con camión volquete de material selecto a 10 km carga con equipo, incluido derecho de explotación	
			TRES MILLONES NOVECIENTOS SESENTA Y NUEVE MIL DOSCIENTOS OCHENTA Y SEIS CÓRDOBAS CON SETENTA CENTAVOS	**3969286.70**
		m³	Relleno y compactación con vibrocompactadora manual	
			SEIS MILLONES TREINTA Y DOSMIL OCHOCIENTOS SESENTA Y SEIS CÓRDOBAS CON TRES CENTAVOS	**6032866.03**
ETAPA 211: SUPER ESTRUCTURA PARA PUENTE				
			CIMBRA	
211	**05**		**Cimbra cuajada para encofrado de pilas inclinadas y tablero**	
		m³	Cimbra con puntales, para sujección del encofrado de pilas inclinadas y tablero, incluido transporte, montaje y desmontaje	
			NUEVE MILLONES TRESCIENTOS VEINTE MIL SEISCIENTOS SETENTA CÓRDOBAS CON OCHENTA Y SIETE CENTAVOS	**9320670.87**
			ARCO	
211	**09**		**Formaletas**	
		m²	Formaletas de madera blanca para puente vehicular	
			UN MILLÓN NOVECIENTOS SETENTA Y DOS MIL TRESCIENTOS NOVENTA Y NUEVE CÓRDOBAS CON UN CÉNTIMO	**1972399.01**
211	**08**		**Acero de refuerzo principal**	
		LBS	Hierro en varillas corrugado de grado 60 de diámetro superior al Nº4	
			CUATRO MILLONES QUINIENTOS CUARENTA Y DOS MIL CUATROCIENTOS NOVENTA Y DOS CÓRDOBAS CON OCHENTA Y SIETE CENTAVOS	**4542492.87**
211	**16**		**Concreto estructural**	
		m³	Concreto de 4500 PSI con mezcladora	
			UN MILLÓN NOVECIENTOS CINCUENTA Y CINCO MIL NOVECIENTOS CINCUENTA Y UN CÓRDOBAS CON SESENTA Y NUEVE CENTAVOS	**1955951.69**
			PILAS	
211	**09**		**Formaletas**	

		m²	Formaletas para columnas (área de contacto)	
			DOSCIENTO VEINTI UN MIL DOSCIENTOS NOVENTA Y SIETE CÓRDOBAS CON CINCUENTA Y NUEVE CENTAVOS	221297.59
211	08		**Acero de refuerzo principal en pilas**	
		LBS	Hierro en varillas corrugado de grado 60 de diámetro superior al Nº4	
			DOS MILLONES TREINTA Y SEIS MIL CUARENTA Y UN CÓRDOBAS CON CINCUENTA Y CINCO CENTAVOS	2036041.55
211	16		**Concreto estructural**	
		m³	Concreto de 4500 PSI con mezcladora	
			OCHOCIENTOS TREINTA Y SIETE MIL SETENTA Y NUEVE CÓRDOBAS CON OCHENTA Y UN CENTAVOS	837079.81
211	05		**Aparato de apoyo**	
		C/U	Apoyo movil para puente	
			DOSCIENTOS VEINTI OCHO MIL SETECIENTOS SETENTA Y SEIS CÓRDOBAS CON SESENTA Y TRES CENTAVOS	228766.63
			TABLERO	
211	09		**Formaletas en tablero**	
		m²	Formaletas de madera blanca para puente vehicular	
			SIETE MILLONES CINCUENTA Y SIETE MIL SESENTA Y CUATRO CÓRDOBAS CON CINCUENTA Y SEIS CENTAVOS	7057064.56
211	08		**Acero de refuerzo principal en tablero**	
		LBS	Hierro en varillas corrugado de grado 60 de diámetro superior al Nº4	
			CINCO MILLONES NOVECIENTOS SETENTA Y SIETE MIL CIENTO NOVENTA Y SEIS CÓRDOBAS CON SIETE CENTAVOS	5977196.07
211	16		**Concreto estructural en tablero**	
		m³	Concreto de 4500 PSI con mezcladora	
			SIETE MILLONES CUARENTA Y DOS MIL CUATROCIENTOS DIECISIETE CÓRDOBAS CON OCHENTA Y TRE CENTAVOS	7042417.83
211	05		**Otro tipo de obras**	
		m²	Tela asfáltica para impermeabilización de tablero	
			TRECE MIL SEISCIENTOS CUARENTA Y UN CÓRDOBAS CON SETENTA Y TRES CENTAVOS	13641.73
211	05		**Otro tipo de obras**	
		C/U	Sumideros	
			VEINTE MIL CUATROCIENTOS TREINTA Y OCHO CÓRDOBAS CON SETENTA Y CUATRO CENTAVOS	20438.74
211	05		**Otro tipo de obras**	
		m	Baranda de tubo redondo de Ho. Go. Diámetro=8" y altura=0.90m, ilcluida pintura anticorrosiva	
			UN MILLÓN QUINIENTOS TREINTA Y OCHO MIL OCHOCIENTOS SESENTA Y NUEVE CÓRDOBAS CON CUARENTA CENTAVOS	1538869.40
			PAVIMENTO	
211	09		Formaleta	
		m²	Formaleta symons con todos los accesorios de fijación	
			CUARENTA Y CINCO MIL CIENTO TREINT Y SIETE CÓRDOBAS CON SESENTA CENTAVOS	45137.60
211	08		Acero de refuerzo principal	
		LBS	Hierro en varillas corrugado de grado 60 de diámetro superior al Nº4	
			DOS MILLONES SEISCIENTOS SESENTA Y UN MIL NOVECIENTOS NOVENTA CÓRDOBAS CON QUINCE CENTAVOS	2661990.15
211	16		Concreto estructural	
		m³	Concreto de 4500 PSI con mezcladora	
			UN MILLÓN DOSCIENTOS CINCUENTA Y UN MIL SEISCIENTOS CATORCE CÓRDOBAS CON CINCUENTA Y CUATRO CENTAVOS	1251614.54
			LOSA DE TRANSICIÓN	
211	02		**Concreto de limpieza en fondo de losas de transición (nivelación)**	
		m³	Concreto de 3000 PSI con mezcladora	
			CUARENTAICINCO MIL QUINIENTOS NOVENTA Y SIETE CÓRDOBAS CON CINCUENTA Y DOS CENTAVOS	45597.52
211	09		**Formaletas en losas de transición**	
		m²	Formaleta symons con todos los accesorios de fijación	
			QUINCEMIL NOVECIENTOS SIETE CÓRDOBAS CON NOVENTA Y CINCO CENTAVOS	15907.95
211	08		**Acero de refuerzo principal en losa de transición**	
		LBS	Hierro en varillas corrugado de grado 60 de diámetro superior al Nº4	
			DOSCIENTOS CUARENTA MIL DOSCIENTOS CUATRO CÓRDOBAS CON CUARENTA Y UN CENTAVOS	240204.41
211	16		**Concreto estructural en losa de transición**	
		m³	Concreto de 4500 PSI con mezcladora	

			CIENTO SESENTA Y UN MIL SEISCIENTOS TREINTA Y SIETE CÓRDOBAS CON OCHO CENTAVOS	**161637.08**
ETAPA 213: SEÑALIZACIÓN HORIZONTAL Y VERTICAL				
213	**01**		**Señales de información**	
		C/U	Señal informativa estandar con paral de acero con base de concreto de 3000 PSI, incluida excavación	
			CATORCEMIL CIENTO VEINTE CÓRDOBAS CON NUEVE CENTAVOS	**14120.09**
213	**02**		**Señales de reglamentación**	
		m	Señalización horizontal pintada con equipo	
			CUATROCIENTOS TREINTA Y OCHO CÓRDOBAS CON TRECE CENTAVOS	**438.13**
213	**03**		**Señales de prevención**	
		C/U	Señal de tránsito de prevención estandar	
			CUATRO MIL SEISCIENTOS NOVENTA Y OCHO CÓRDOBAS CON VEINTICINCO CENTAVOS	**4698.25**
ETAPA 214: MEDIDAS DE MITIGACIÓN Y PREVENCIÓN DE ACCIDENTES				
214	**01**		**Anejo Nº14: Estudio de Seguridad y Salud**	
		GLB	Anejo Nº14: Estudio de Seguridad y Salud	
			TRESCIENTOS SETENTA Y CUATRO MIL NOVECIENTOS SETANTA Y UN CÓRDOBAS CON VEINTE CENTAVOS	**374971.20**
ETAPA 217: PRUEBA DE CARGA				
217	**01**		**Anejo Nº9: Cálculos estructurales**	
			Prueba de carga	
			SESENTA Y CUATROMIL QUINIENTOS SEIS CÓRDOBAS CON SESENTA Y CINCO CENTAVOS	**64506.65**
ETAPA 218: CONTROL DE CALIDAD				
217	**01**		**Anejo Nº15: Control de calidad**	
			Valoración de los ensayos	
			UN MILLÓN CATORCEMIL SETECIENTOS VEINTI CINCO CÓRDOBAS CON CUARENTA CENTAVOS	**1014725.40**

4. PRESUPUESTO

ETAPA	SUBETAPA	CÓDIGO	DESCRIPCIÓN DE LA ETAPA Y/O SUBETAPA	UD	CANTIDAD	COSTE SEGÚN GUÍA	COSTE UNITARIO	COSTE TOTAL
205	00		Preliminares					
205	01		Construcciones temporales (campamento)					
		92204	Champa de madera blanca, ilcluso embaldosado y techo de lámina de zinc, para oficina galerón cerrado.	m²	32.00	930.6351	2155.5938	68979.00
		92205	Champa de madera de pino, incluso embaldosado y techo de lámina de zinc para bodega galerón cerrado y tambo.	m²	90.00	981.7272	2273.9364	204654.28
205	01		Construcción de obras preliminares					
		92005	Concreto de 3000 PSI con mezcladora.	m³	38.40	1742.1088	4035.1786	154950.86
		93675	Alcantarilla de tubería perfilada de PVC de diámetro 78".	m	36.00	7982.6338	18489.8631	665635.07
		92371	Formaleta para muros.	m²	281.60	147.4278	341.4813	96161.13
		94356	Hierro en varillas corrugado de grado 60 de diámetro superior al Nº4	LBS	9128.04	12.5637	29.1008	265633.27
		94539	Concreto de 4500 PSI con mezcladora	m³	731.70	2058.5139	4768.0554	3488786.14
205	05		Rótulo					
		04277	Rótulo de 1.22 x 2.44 m de estructura metálica y zinc liso, con bases de concreto reforzado.	C/U	2.00	5870.6391	13597.9322	27195.86
205	06		Remoción de estructuras de concreto					
		93395	Demolición con retroexcavadora y martillo hidraúlico a cielo abierto de estructura de concreto	m³	1541.55	109.4240	253.4545	390712.78
207	00		Sub-estructura para puentes					
207	01		Limpieza inicial					
		95931	Eliminar con motosierra árbol existente de diámetro de 8", considerando una densidad de 0,3 árboles/m²	C/U	82.00	347.7375	805.4508	66046.97
		95463	Eliminar con machete árboles existentes de diámetro menos de 4", considerando una densidad de 0,1 árboles/m²	C/U	126.00	57.3750	132.8955	16744.83
		95654	Descapote con motoniveladora en terreno limo-arcilloso	m²	4270.53	3.9339	9.1119	38912.64
207	03		Excavación principal					
		94654	Excavación con retroexcavadora para estructura de fundaciones de puente en terreno de material mixto de arcillas, limos y bolones.	m³	10968.79	153.2450	354.9554	3893431.24
		93395	Excavación con retroexcavadora y martillo hidráulico a cielo abierto en roca.	m³	2221.76	109.4240	253.4545	563115.07
207	18		Acarreos					
		95520	Botar con camión volquete tierra sobrante de excavación a 7.5 km incluido carga con equipo	m³	8111.27	102.5192	237.4612	1926111.91
			PILOTES					
207	07		Perforación					
		92622	Perforación para pilote con máquina rotativa en terreno de formación consolidada	m	354.48	645.6549	1495.5052	530126.68
207	14		Acero de refuerzo principal					
		94356	Hierro en varillas corrugado de grado 60 de diámetro superior al Nº4	LBS	73275.57	12.5637	29.1008	2132377.71
207	16		Concreto estructural					
		94539	Concreto de 4500 PSI con mezcladora	m³	222.90	2058.5139	4768.0554	1062799.55
			ZAPATAS					
207	02		Concreto de limpieza en fondo de cimentación (nivelación)					
		92002	Concreto de 3000 PSI con mezcladora.	m³	25.45	1742.1088	4035.1786	102695.30
207	15		Formaleta					
		92388	Formaleta para fundaciones	m²	425.97	188.1775	435.8682	185666.78
207	14		Acero de refuerzo principal					
		94356	Hierro en varillas corrugado de grado 60 de diámetro superior al Nº4	LBS	176390.40	12.5637	29.1008	5133101.75
207	16		Concreto estructural					
		94539	Concreto de 4500 PSI con mezcladora	m³	586.08	2058.5139	4768.0554	2794461.91
			ESTRIBOS					
207	15		Formaletas					
		92388	Formaleta para fundaciones	m²	245.62	188.1775	435.8682	107057.95
207	14		Acero de refuerzo principal					
		94356	Hierro en varillas corrugado de grado 60 de diámetro superior al Nº4	LBS	38857.24	12.5637	29.1008	1130776.77
207	16		Concreto estructural					
		94539	Concreto de 4500 PSI con mezcladora	m³	68.09	2058.5139	4768.0554	324656.89
211	05		Aparato de apoyo					
		92549	Apoyo movil para puente	C/U	4	4489.3400	10398.4830	41593.93
			ZAPATAS Y ESTRIBOS					
207	19		Explotación de banco					
		92011	Acarreo con camión volquete de material selecto a 10 km carga con equipo, incluido derecho de explotación	m³	15877.82	107.9280	249.9894	3969286.70
		93278	Relleno y compactación con vibrocompactadora manual	m³	12569.94	207.2063	479.9439	6032866.03
211	00		Super estructura para puentes					
			CIMBRA					
211	**05**		**Cimbra cuajada para encofrado de pilas inclinadas y tablero**					
			Cimbra con puntales, para sujección del encofrado de pilas inclinadas y tablero, incluido transporte, montaje y desmontaje	m³	5945.65	676.8000	1567.6454	9320670.87
			ARCO					
211	09		Formaletas					
		95068	Formaletas de madera blanca para puente vehicular	m²	590.11	1443.0265	3342.4260	1972399.01
211	08		Acero de refuerzo principal					
		94356	Hierro en varillas corrugado de grado 60 de diámetro superior al Nº4	LBS	156095.12	12.5637	29.1008	4542492.87
211	16		Concreto estructural					
		94539	Concreto de 4500 PSI con mezcladora	m³	410.22	2058.5139	4768.0554	1955951.69
			PILAS					
211	09		Formaletas					

		92346	Formaletas para columnas (área de contacto)	m²	468.16	204.0774	472.6965	221297.59
211	08		Acero de refuerzo principal					
		94356	Hierro en varillas corrugado de grado 60 de diámetro superior al Nº4	LBS	69965.14	12.5637	29.1008	2036041.55
211	16		Concreto estructural					
		94539	Concreto de 4500 PSI con mezcladora	m³	175.56	2058.5139	4768.0554	837079.81
211	05		Aparato de apoyo					
		92549	Apoyo movil para puente	C/U	22	4489.3400	10398.4830	228766.63
			TABLERO					
211	09		Formaletas					
		95068	Formaletas de madera blanca para puente vehicular	m²	2111.36	1443.0265	3342.4260	7057064.56
211	08		Acero de refuerzo principal					
		94356	Hierro en varillas corrugado de grado 60 de diámetro superior al Nº4	LBS	205396.28	12.5637	29.1008	5977196.07
211	16		Concreto estructural					
		94539	Concreto de 4500 PSI con mezcladora	m³	1477.00	2058.5139	4768.0554	7042417.83
211	05		Otro tipo de obras					
			Tela asfáltica para impermeabilización de tablero	m²	1750.00	245.3978	568.4053	994709.28
211	05		Otro tipo de obras					
		93326	Sumideros	C/U	24.00	25.2115	58.3964	1401.51
		04646	Baranda de tubo redondo de Ho. Go. Diámetro=8" y altura=0.90m, ilcluida pintura anticorrosiva	m	350.00	1898.2186	4396.7697	1538869.40
			PAVIMENTO					
211	09		Formaletas					
		93055	Formaleta symons con todos los accesorios de fijación	m²	55.50	351.1219	813.2900	45137.60
211	08		Acero de refuerzo principal					
		94356	Hierro en varillas corrugado de grado 60 de diámetro superior al Nº4	LBS	91474.81	12.5637	29.1008	2661990.15
211	16		Concreto estructural					
		94539	Concreto de 4500 PSI con mezcladora	m³	262.50	2058.5139	4768.0554	1251614.54
			LOSA DE TRANSICIÓN					
211	02		Concreto de limpieza en fondo de losas de transición (nivelación)					
		92002	Concreto de 3000 PSI con mezcladora.	m³	11.30	1742.1088	4035.1786	45597.52
211	09		Formaletas					
		93055	Formaleta symons con todos los accesorios de fijación	m²	19.56	351.1219	813.2900	15907.95
211	08		Acero de refuerzo principal					
		94356	Hierro en varillas corrugado de grado 60 de diámetro superior al Nº4	LBS	8254.22	12.5637	29.1008	240204.41
211	16		Concreto estructural					
		94539	Concreto de 4500 PSI con mezcladora	m³	33.90	2058.5139	4768.0554	161637.08

213	00		Señalización horizontal y vertical					
213	01		Señales de información					
		02828	Señal informativa estandar con paral de acero con base de concreto de 3000 PSI, incluida excavación	C/U	4.00	1524.0173	3530.0218	14120.09
213	01		Señales de reglamentación					
		93621	Señalización horizontal pintada con equipo	m	175.00	1.0809	2.5036	438.13
213	03		Señales de prevención					
		02829	Señal de tránsito de prevención estandar	C/U	2.00	1014.1882	2349.1245	4698.25
214	00		Medidas de mitigación y prevención de accidentes					
214	01		Anejo Nº14: Estudio de Seguridad y Salud					
			Anejo Nº14: Estudio de Seguridad y Salud	GLB	1.00	374971.2000		374971.20
217	00		Prueba de carga					
217	01		Anejo Nº9: Cálculos estructurales					
			Prueba de carga	GLB	1.00	64506.6500		64506.65
218	00		Control de calidad					
218	01		Anejo Nº15: Control de calidad					
			Valoración de los ensayos	GLB	1.00	1014725.4		1014725.40

TOTAL 85036446.64

5. RESUMEN DE PRESUPUESTO

205 PRELIMINARES	5362708.39
207 SUB-ESTRUCTURA PARA PUENTES	30051830.61
211 SUPER ESTRUCTURA PARA PUENTE	48148447.92
213 SEÑALIZACIÓN HORIZONTAL Y VERTICAL	19256.47
214 MEDIDAS DE MITIGACIÓN Y PREVENCIÓN DE ACCIDENTES	374971.20
217 PRUEBA DE CARGA	64506.65
218 CONTROL DE CALIDAD	1014725.40
	85036446.64
15% IVA	12755467.00

TOTAL **97791913.64 Córdobas**

4242249.60 Dólares

3227296.13 Euros

Asciende el precio de ejecución del proyecto a la cantidad de:

- NOVENTA Y SIETE MILLONES SETECIENTOS NOVENTA Y UN MIL NOVECIENTOS TRECE CÓRDOBAS CON SESENTA Y CUATRO CENTAVOS.
- CUATRO MILLONES DOSCIENTOS CUARENTA Y DOS MIL DOSCIENTOS CUARENTA Y NUEVE DÓLARES CON SESENTA CENTAVOS.
- TRES MILLONES DOSCIENTOS VEINTISIETE MIL DOSCIENTOS NOVENTA Y SEIS EUROS CON TRECE CÉNTIMOS.

Burgos, Febrero de 2.012

AUTORES DEL PROYECTO

D. Sergio Agustín Ratón Alomar

Dña. Miriam Sacristán Terradillos

Dña. Raquel Estrada Merino

D. Alfonso Cid González